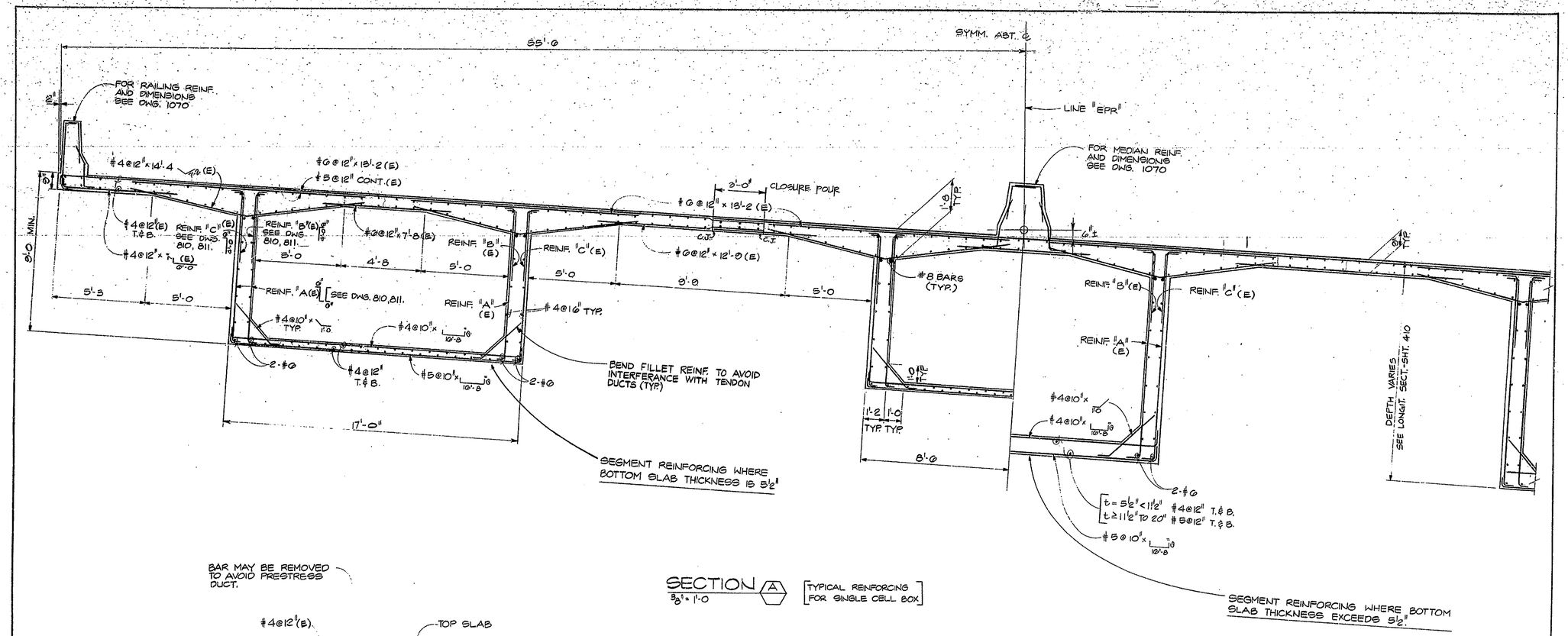

SECTION A
3/8" = 1'-0

[TYPICAL REINFORCING FOR SINGLE CELL BOX]

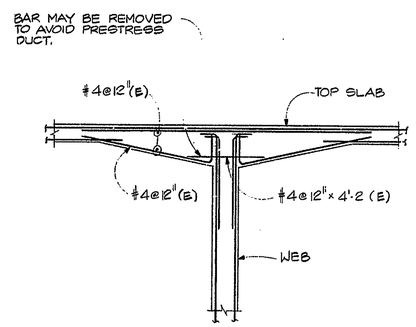

OPTIONAL REINF. ARRANGEMENT WHERE PRESTRESSING TENDONS INTERFERE WITH SLAB BOTTOM REINF. NEAR SUPPORTS.

DETAIL I
3/8" = 1'-0

NOTE:

1. ALL REINFORCING IN DECK AND RAILING SHALL BE EPOXY COATED. AS INDICATED BY (E)
2. AT LOCATIONS WHERE PRESTRESSING DUCT POSITION CONFLICTS WITH WEB REINF., CUT REINF. TO CLEAR DUCTS AND ADD SPLICE BARS TOP AND BOTTOM, SEE DETAIL "F" SHEET 920.
3. PROVIDE AT LEAST ONE WEB FACE, AT ALL WEBS WITH A 3" SPACE BETWEEN DUCTS AND FORMS.
4. FOR REINF. "A", "B" & "C" SEE SHEET NO. 810
5. DIM. SHOWN FROM CENTERLINE TO EDGE OF DECK OR FROM EDGE OF DECK TO EDGE OF DECK ON GENERAL PLANS AND BOX GIRDER CROSS SECTION SHEETS ARE MEASURED IN A HORIZONTAL PLANE.

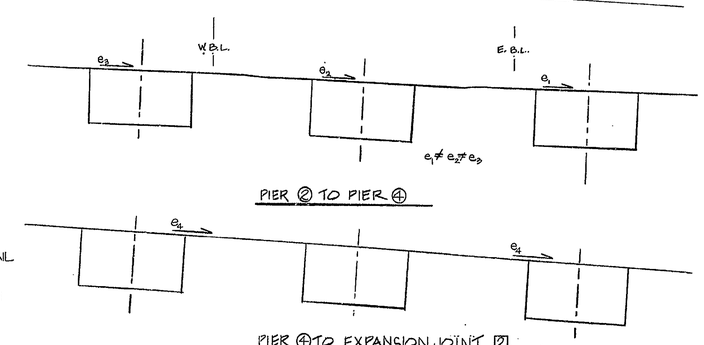

SINGLE BOX SUPERELEVATION

APPROVED FOR CONSTRUCTION
W. B. [illegible] 6-15-81
W. B. [illegible]
Assistant Engineer of Bridge Design

NO.	REVISION	DATE
1	HORIZ. CONTROL	FEB. 1981

T. Y. LIN INTERNATIONAL
STRUCTURAL ENGINEERS

REID, QUEBE, ALLISON, WILCOX AND ASSOCIATES INC.
CONSULTING ENGINEERS

No. 16266 STATE OF ILLINOIS PROFESSIONAL ENGINEER

WALSH CONSTRUCTION COMPANY
A DIVISION OF GUY F. ATKINSON CO.
DARIEN, CONNECTICUT

SHEET TITLE
BOX CROSS SECTION REINFORCEMENT DETAILS - SEGMENT I

CLINE AVENUE EXTENSION OVER INDIANA HARBOR CANAL
BRIDGE FILE: 912-46-2546 CONTRACT NO. B-11812 INDIANA STATE HIGHWAY COMMISSION

SHEET N.
511