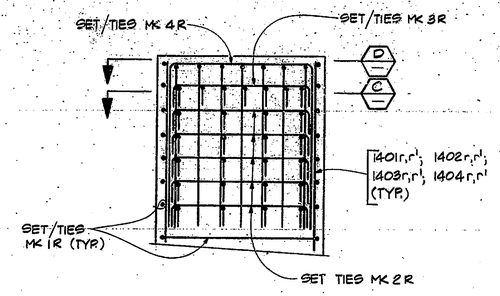

DETAIL 1
½"=1'-0

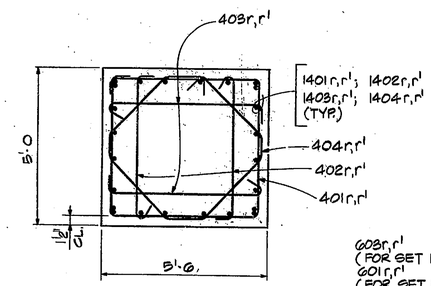

1-SET OF TIES MK 1R

SECTION B
½"=1'-0

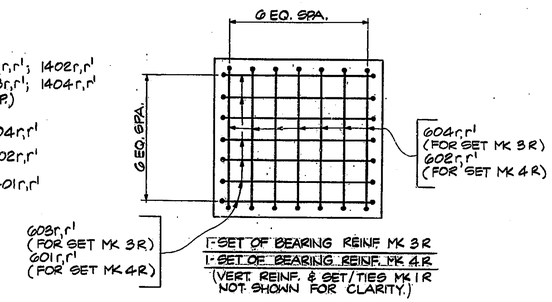

1-SET OF BEARING REINF. MK 3R
1-SET OF BEARING REINF. MK 4R
(VERT. REINF. & SET/TIES MK 1R NOT SHOWN FOR CLARITY.)

SECTION D
½"=1'-0

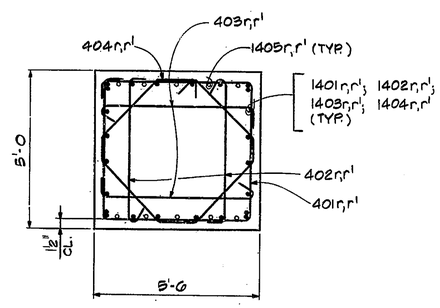

1-SET OF TIES MK 1R

SECTION A
½"=1'-0

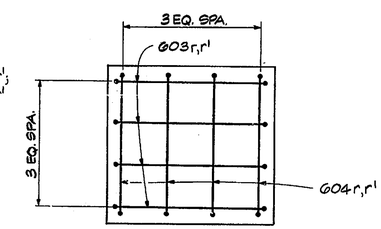

1-SET OF BEARING REINF. MK 2R
(VERT. REINF. & SET/TIES MK 1R NOT SHOWN FOR CLARITY.)

SECTION C
½"=1'-0

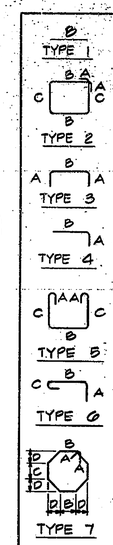

MARK Nº	TYPE	Nº REQ'D	A	B	C	D	E	LGTH.	WEIGHT LBS.
PIER No. 23 & 23'									
401r	2	236	0'-8	5'-3	4'-9			21'-4	
402r	6	472	0'-8	4'-9	0'-8			6'-1	
403r	6	472	0'-8	5'-3	0'-8			6'-7	
404r	7	236	0'-8	1'-5	0'-11	1'-11		10'-10	
							TOTAL #4		10,012
601r	3	28	4'-6	5'-1				14'-1	
602r	3	28	4'-6	4'-7				13'-7	
603r	3	108	0'-11	5'-1				6'-11	
604r	3	108	0'-11	4'-7				6'-5	
							TOTAL #6		3320
1401r	4	24	2'-7	60'-6				63'-1	
1402r	4	24	2'-7	60'-10				63'-5	
1403r	4	24	2'-7	62'-11				65'-6	
1404r	4	24	2'-7	62'-7				65'-2	
1405r	4	40	2'-7	38'-6				30'-1	
							TOTAL #14		58,258
TOTAL REINF.									71,590
CONC. fc' = 5,000 P.S.I.									
TOTAL PIER CONCRETE VOLUME									229.0 C.Y.
PIER No. 24 & 24'									
401r'	2	212	0'-8	5'-3	4'-9			21'-4	
402r'	6	424	0'-8	4'-9	0'-8			6'-1	
403r'	6	424	0'-8	5'-3	0'-8			6'-7	
404r'	7	212	0'-8	1'-5	0'-11	1'-11			
							TOTAL #4		8,994
601r'	3	28	4'-6	5'-1				14'-1	
602r'	3	28	4'-6	4'-7				13'-7	
603r'	3	108	0'-11	5'-1				6'-11	
604r'	3	108	0'-11	4'-7				6'-5	
							TOTAL #6		3,326
1401r'	4	24	2'-7	55'-2				57'-9	
1402r'	4	24	2'-7	53'-6				56'-1	
1403r'	4	24	2'-7	56'-7				59'-2	
1404r'	4	24	2'-7	56'-3				58'-10	
1405r'	4	40	2'-7	30'-6				33'-1	
							TOTAL #14		52,688
TOTAL REINF.									65,008
CONC. fc' = 5,000 P.S.I.									
TOTAL PIER CONCRETE VOLUME									205.0 C.Y.

9-26-80 ADD THIS SHEET

N.	REVISION	DATE

T. Y. LIN INTERNATIONAL
STRUCTURAL ENGINEERS

REID, QUEBE, ALLISON, WILCOX AND ASSOCIATES INC.
CONSULTING ENGINEERS

8-12-1978

T. Y. LIN REGISTERED No. 18266 STATE OF INDIANA PROFESSIONAL ENGINEER

WALSH CONSTRUCTION COMPANY
A DIVISION OF GUY F. ATKINSON CO.
DARIEN, CONNECTICUT

SHEET, TITLE
PIER No. 23 AND 24 E.B.L. AND W.B.L. COLUMN DETAILS (2)

CLINE AVENUE EXTENSION OVER INDIANA HARBOR CANAL
BRIDGE FILE: 912-45-2546 CONTRACT NO. 8-11612
INDIANA STATE HIGHWAY COMMISSION

SHEET N.
321A