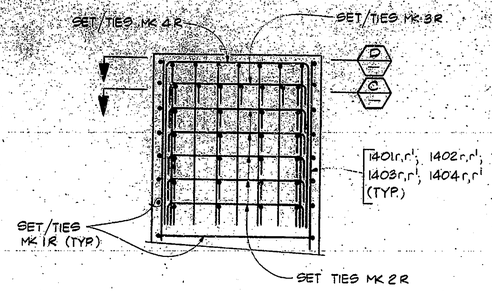

DETAIL 1
½" = 1'-0

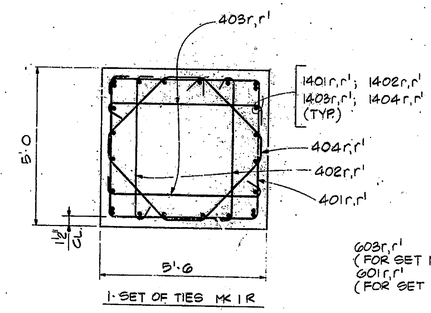

SECTION B
½" = 1'-0

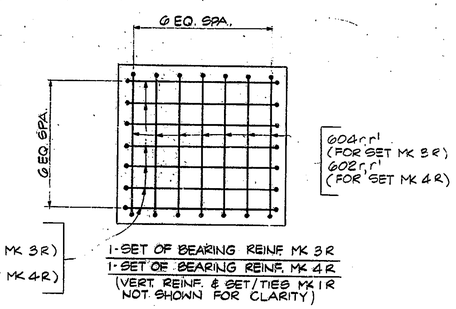

SECTION D
½" = 1'-0

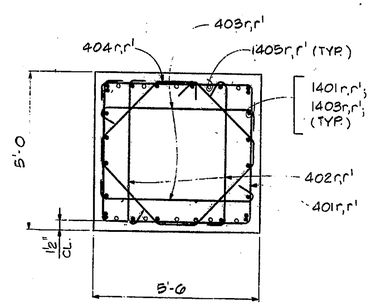

SECTION A
½" = 1'-0

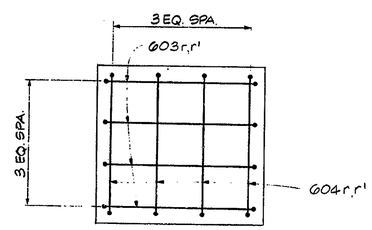

SECTION C
½" = 1'-0

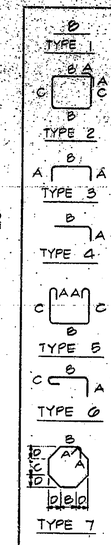

MARK Nº	TYPE	Nº REQD.	A	B	C	D	E	LGTH.	WEIGHT LBS.
PIER No. 23 & 23'									
401r	2	280	0'-8	5'-3	4'-9			21'-4	
402r	6	472	0'-8	4'-9	0'-8			6'-1	
403r	6	472	0'-8	5'-3	0'-8			6'-7	
404r	7	280	0'-8	1'-5	0'-11	1'-11		10'-10	
							TOTAL #4		10,012
601r	3	28	4'-6	5'-1				14'-1	
602r	3	28	4'-6	4'-7				13'-7	
603r	3	108	0'-11	5'-1				6'-11	
604r	3	108	0'-11	4'-7				6'-5	
							TOTAL #6		3320
1401r	4	24	2'-7	60'-6				65'-1	
1402r	4	24	2'-7	60'-10				65'-5	
1403r	4	24	2'-7	62'-11				65'-6	
1404r	4	24	2'-7	62'-7				65'-2	
1405r	4	40	2'-7	33'-6				36'-1	
							TOTAL #14		58,258
TOTAL REINF.									71,986
CONC. fc' = 3,000 P.S.I.									
TOTAL PIER CONCRETE VOLUME									229.6 C.Y.
PIER No. 24 & 24'									
401r'	2	212	0'-8	5'-3	4'-9			21'-4	
402r'	6	424	0'-8	4'-9	0'-8			6'-1	
403r'	6	424	0'-8	5'-3	0'-8			6'-7	
404r'	7	212	0'-8	1'-5	0'-11	1'-11			
							TOTAL #4		8,994
601r'	3	28	4'-6	5'-1				14'-1	
602r'	3	28	4'-6	4'-7				13'-7	
603r'	3	108	0'-11	5'-1				6'-11	
604r'	3	108	0'-11	4'-7				6'-5	
							TOTAL #6		3,320
1401r'	4	24	2'-7	55'-2				57'-9	
1402r'	4	24	2'-7	55'-6				58'-1	
1403r'	4	24	2'-7	56'-7				59'-2	
1404r'	4	24	2'-7	56'-3				58'-10	
1405r'	4	40	2'-7	30'-6				33'-1	
							TOTAL #14		53,055
TOTAL REINF									65,375
CONC fc' = 3,000 P.S.I.									
TOTAL PIER CONCRETE VOLUME									205.0 C.Y.

9-26-80 DELETE THIS SHEET

DATE	REVISION	N

T. Y. LIN INTERNATIONAL
STRUCTURAL ENGINEERS

REID, QUEBE, ALLISON, WILCOX AND ASSOCIATES INC.
CONSULTING ENGINEERS

9-12-1978

T. Y. LIN REGISTERED No. 18266 STATE OF INDIANA PROFESSIONAL ENGINEER

WALSH CONSTRUCTION COMPANY
A DIVISION OF GUY F. ATKINSON CO.
DARIEN, CONNECTICUT

SHEET TITLE
PIER No. 23 AND 24 E.B.L. AND W.B.L. COLUMN DETAILS (2)

CLINE AVENUE EXTENSION OVER INDIANA HARBOR CANAL
BRIDGE FILE 912-45-2546 CONTRACT NO 8-11612
INDIANA STATE HIGHWAY COMMISSION

SHEET N
321