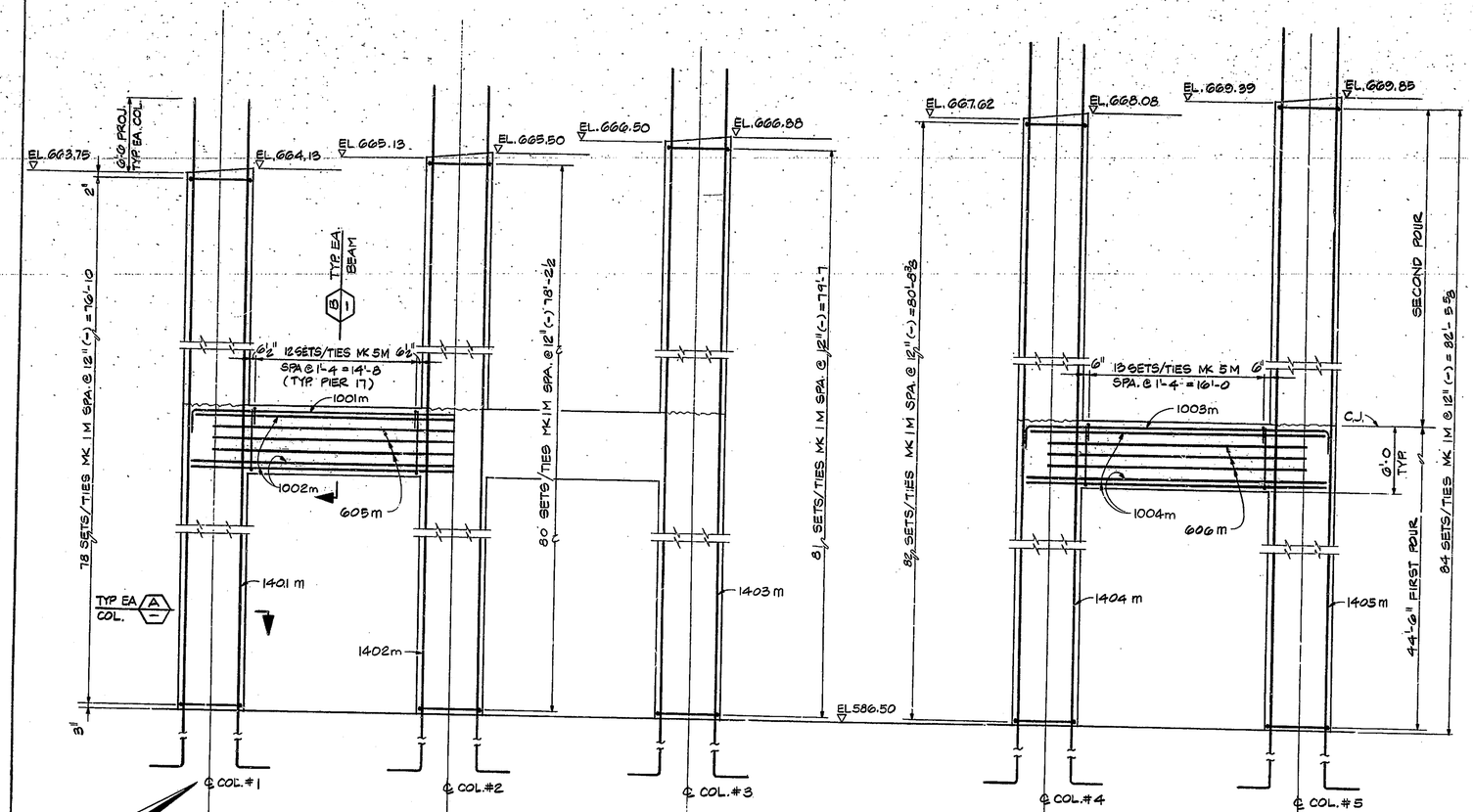

ELEVATION

3/16" = 1'-0

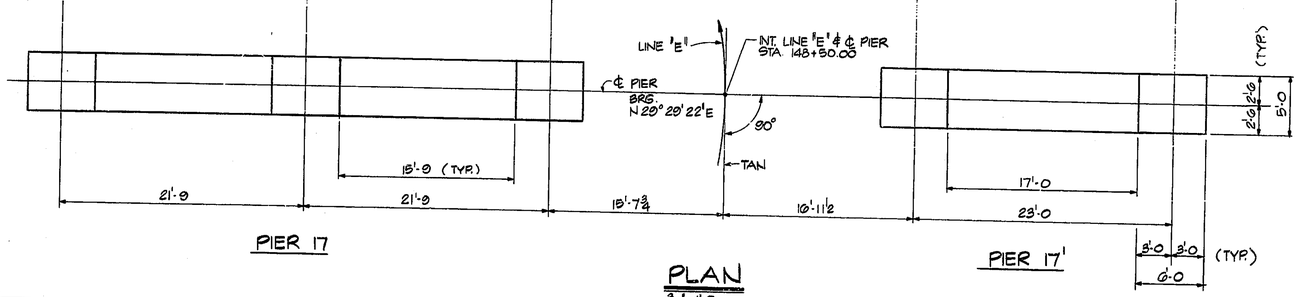

PIER 17

PIER 17'

PLAN

3/16" = 1'-0

MARK Nº	TYPE	Nº REQ'D	A	B	C	D	E	LGTH	WEIGHT LBS.
401m	2	405	0'-8	5'-9	4'-9			22'-4	
402m	6	810	0'-8	4'-9	0'-8			6'-1	
403m	6	810	0'-8	5'-9	0'-8			7'-1	
404m	8	405	0'-8	1'-0		2'-4½		16'-9	
TOTAL #4									17,700
501m	5	37	0'-7	4'-9	5'-9			17'-5	
502m	3	37	0'-9	4'-9				6'-3	
TOTAL #5									914
605m	1	6		43'-6				43'-6	
606m	1	6		23'-0				23'-0	
TOTAL #6									599
1001m	3	6	1'-7	49'-0				52'-2	
1002m	1	18		48'-6				48'-0	
1003m	3	6	1'-7	28'-6				31'-5	
1004m	1	18		28'-0				28'-0	
TOTAL #10									8,031
1401m	4	24	2'-7	88'-3				91'-10	
1402m	4	24	2'-7	90'-7				93'-2	
1403m	4	24	2'-7	92'-0				94'-7	
1404m	4	24	2'-7	93'-1				95'-8	
1405m	4	24	2'-7	94'-10				97'-5	
TOTAL #14									86,782
TOTAL REINF.									114,040
CONC. fc' = 3,000 P.S.I.									
TOTAL PIER CONCRETE VOLUME									499.4 C.Y.

TYPE 1 · TYPE 2 · TYPE 3 · TYPE 4 · TYPE 5 · TYPE 6 · TYPE 8

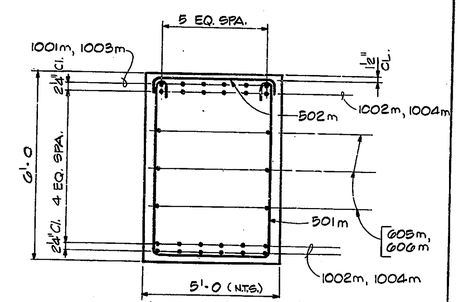

SECTION B

½" = 1'-0

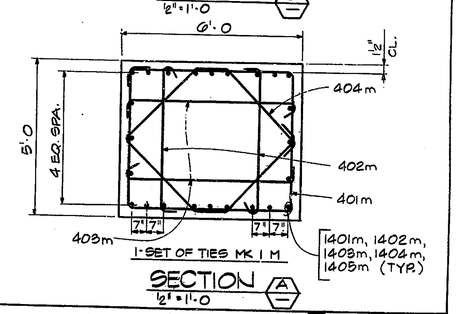

SECTION A

½" = 1'-0

N.	REVISION	DATE

T. Y. LIN INTERNATIONAL
STRUCTURAL ENGINEERS

REID, QUEBE, ALLISON, WILCOX AND ASSOCIATES INC.
CONSULTING ENGINEERS

9-12-1979

T. Y. LIN REGISTERED No. 18266 STATE OF INDIANA PROFESSIONAL ENGINEER

WALSH CONSTRUCTION COMPANY
A DIVISION OF GUY F. ATKINSON CO.
DARIEN, CONNECTICUT

SHEET TITLE

PIER No. 17 E.B.L. AND W.B.L. COLUMN DETAILS

CLINE AVENUE EXTENSION OVER INDIANA HARBOR CANAL
BRIDGE FILE: 812-45-2546 CONTRACT NO. 8-11612
INDIANA STATE HIGHWAY COMMISSION

SHEET N.

314