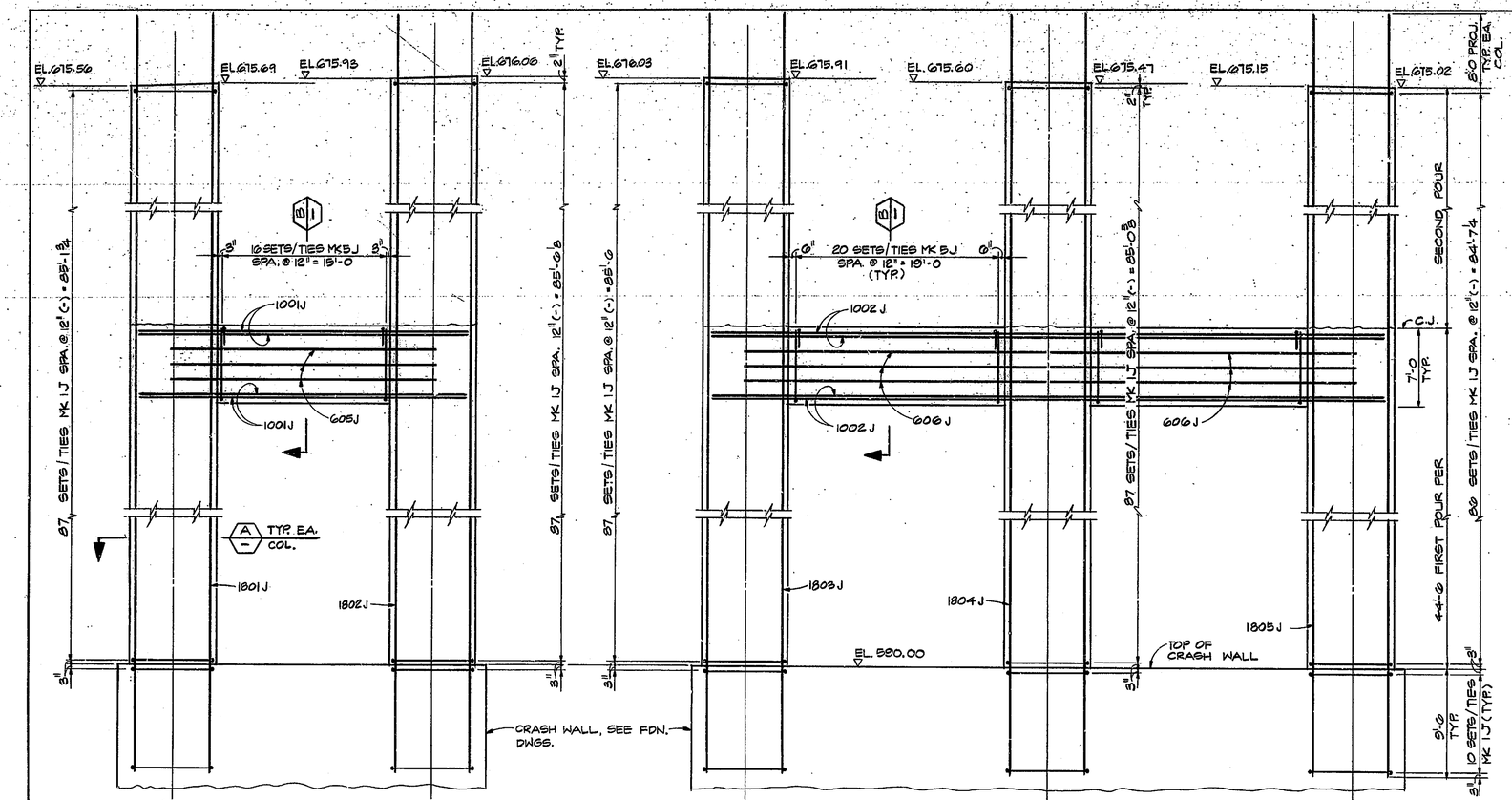

ELEVATION

3/16" = 1'-0

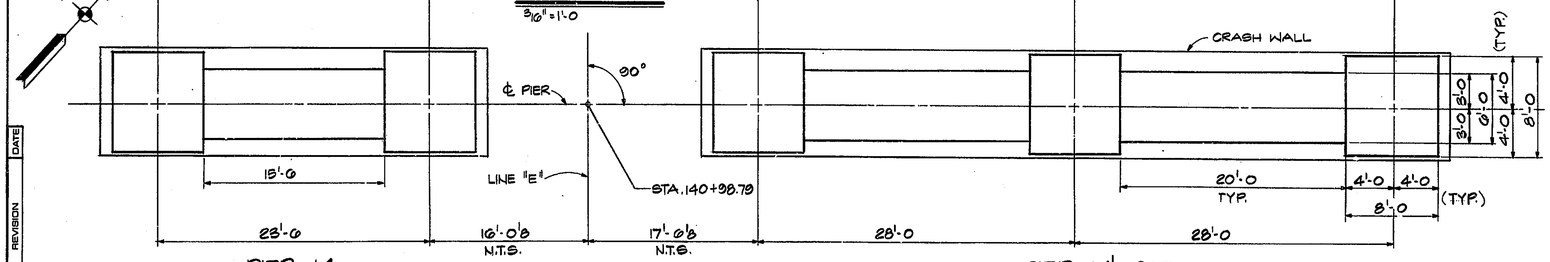

PLAN

3/16" = 1'-0

MARK Nº	TYPE	Nº REQ'D	A	B	C	D	E	LGTH	WEIGHT LBS.
401 J	2	484	0-8	7-9	7-9			32'-4	
402 J	6	1936	0-8	7-9	0-8			9'-1	
404 J	7	484	0-8	2'-3	2'-3	2'-9		25'-11	
								TOTAL #4	30,576
501 J	5	56	0-7	5'-9	6'-9			20'-5	
502 J	3	56	0-9	5'-9				7'-3	
								TOTAL #5	1,016
605 J	1	6		23'-6				23'-6	
606 J	1	12		28'-0				28'-0	
								TOTAL #6	716
1001 J	1	28		31'-0				31'-0	
1002 J	1	28		68'-6				68'-6	
								TOTAL #10	11,384
1801 J	1	32		103'-0				103'-0	
1802 J	1	32		103'-5				103'-5	
1803 J	1	32		103'-5				103'-5	
1804 J	1	32		102'-11				102'-11	
1805 J	1	32		102'-6				102'-6	
								TOTAL #18	224,237
								TOTAL REINF.	266,531
CONC. f'c = 5000 P.S.I.									
TOTAL PIER CONCRETE VOLUME									1101.4 C.Y.

TYPE 1 · TYPE 2 · TYPE 3 · TYPE 4 · TYPE 5 · TYPE 6 · TYPE 7

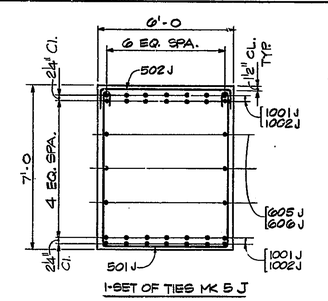

1-SET OF TIES MK 5 J

SECTION B

3/8" = 1'-0

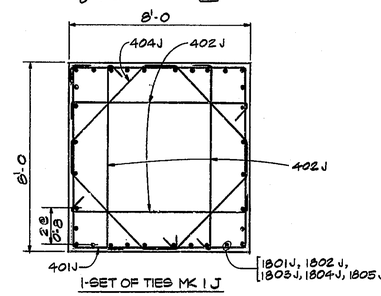

1-SET OF TIES MK 1 J

SECTION A

3/8" = 1'-0

ISSUED FOR APPROVAL 9-4-79

N.	REVISION	DATE

T. Y. LIN INTERNATIONAL
STRUCTURAL ENGINEERS

REID, QUEBE, ALLISON, WILCOX AND ASSOCIATES INC.
CONSULTING ENGINEERS

T. Y. Lin

REGISTERED T. Y. LIN No. 18265 STATE OF INDIANA PROFESSIONAL ENGINEER

WALSH CONSTRUCTION COMPANY
A DIVISION OF GUY F. ATKINSON CO.
DARIEN, CONNECTICUT

SHEET TITLE

PIER No. 14 E.B.L. AND W.B.L. AND PIER 207 COLUMN DETAILS

CLINE AVENUE EXTENSION OVER INDIANA HARBOR CANAL
BRIDGE FILE: 912-46-2646 CONTRACT NO. B-11612
INDIANA STATE HIGHWAY COMMISSION

SHEET N.

310