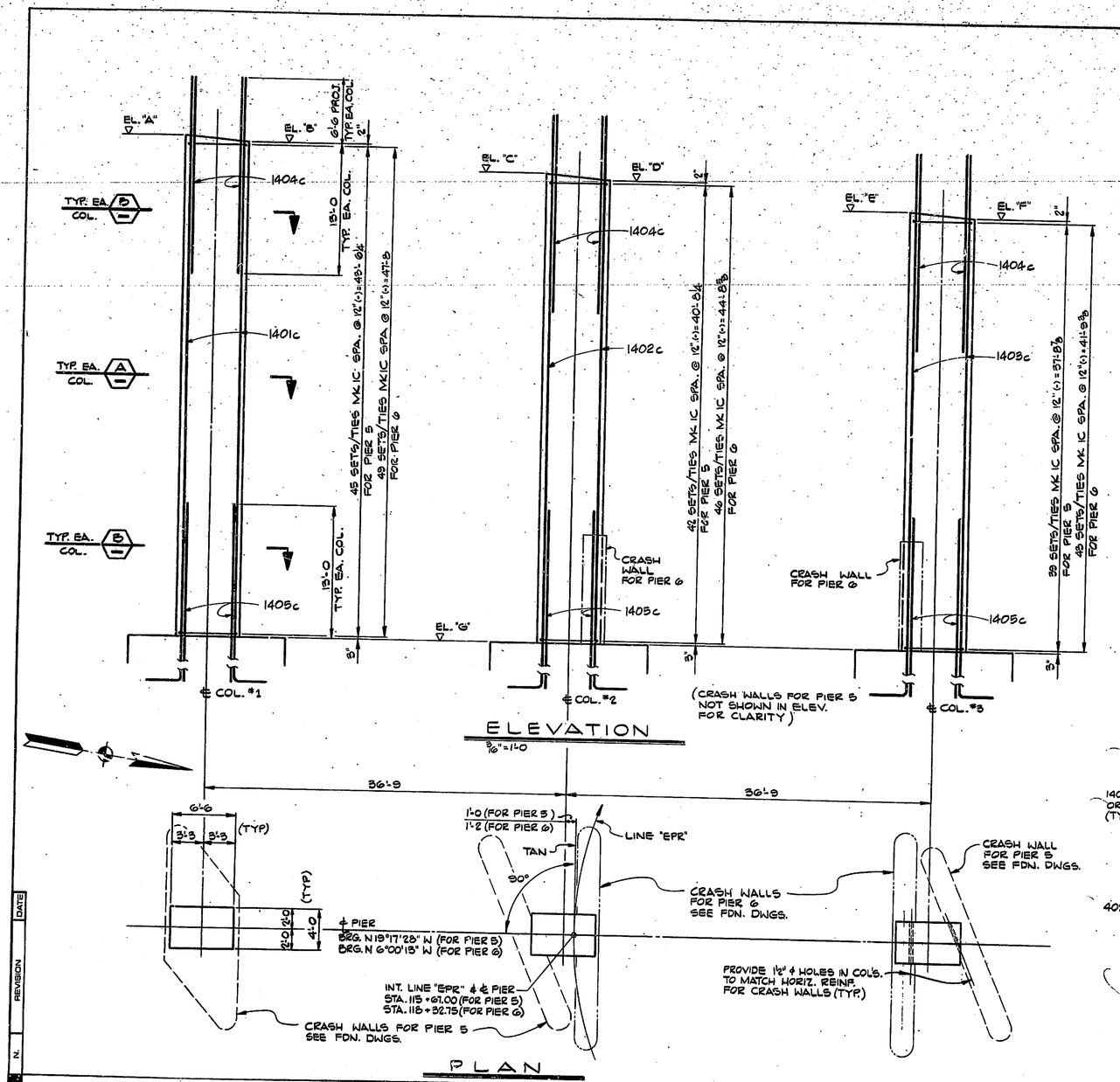

TABLE OF ELEVATIONS	PIER 5	PIER 6
A	628.90	634.10
B	628.44	633.58
C	626.12	631.10
D	625.60	630.64
E	623.18	628.22
F	622.60	627.70
G	584.50	585.50

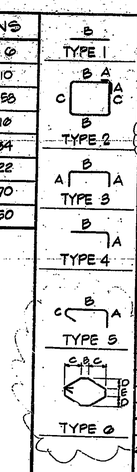

MARK Nº	TYPE	Nº REQ'D	A	B	C	D	E	LGTH.	WEIGHT LBS.
PIER No. 5									
401C	2	126	0'-8	6'-3	3'-9			21'-4	
402C	2	252	0'-8	1'-1	3'-9			11'-0	
404C	6	126	0'-8	11'-0	3'-1	1'-5	0'-10	18'-7	
405C	5	252	0'-8	6'-3	0'-8			7'-7	
TOTAL #4									6,488
1401C	4	24	2'-7	58'-8				59'-3	
1402C	4	24	2'-7	58'-10				59'-5	
1403C	4	24	2'-7	58'-11				59'-6	
1404C	1	42	-	19'-6				19'-6	
1405C	1	42	-	19'-3				19'-3	
TOTAL #14									43,539
TOTAL REINF									50,025
CONC f_c' = 5000 P.S.I.									
TOTAL PIER CONCRETE VOLUME									120.2 C.Y.
PIER No. 6									
401C	2	138	0'-8	6'-3	3'-9			21'-4	
402C	2	276	0'-8	1'-1	3'-9			11'-0	
404C	6	138	0'-8	11'-0	3'-1	1'-5	0'-10	18'-7	
405C	5	276	0'-8	6'-3	0'-8			7'-7	
TOTAL #4									7,105
1401C	4	24	2'-7	61'-10				64'-5	
1402C	4	24	2'-7	58'-10				61'-5	
1403C	4	24	2'-7	58'-11				58'-6	
1404C	1	42	-	19'-6				19'-6	
1405C	1	42	-	20'-3				20'-3	
TOTAL #14									46,040
TOTAL REINF									53,751
CONC. f_c' = 5000 P.S.I.									
TOTAL PIER CONCRETE VOLUME									131.9 C.Y.

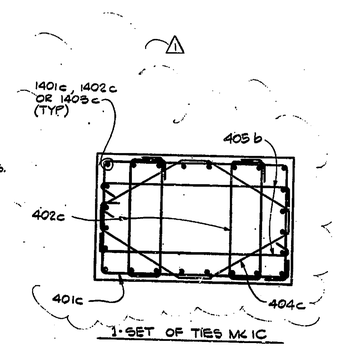

SECTION A
½" = 1'-0

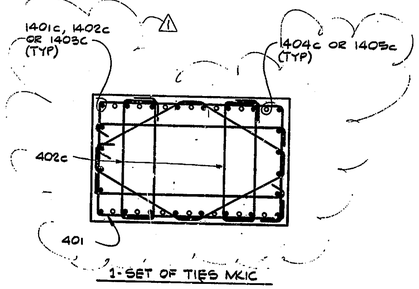

SECTION B
½" = 1'-0

1 REVISED 4-10-80

DATE	REVISION	N.

T. Y. LIN INTERNATIONAL
STRUCTURAL ENGINEERS

REID, QUEBE, ALLISON, WILCOX AND ASSOCIATES INC.
CONSULTING ENGINEERS

JULY 20, 1979

T. Y. LIN REGISTERED No. 18266 STATE OF INDIANA PROFESSIONAL ENGINEER

WALSH CONSTRUCTION COMPANY
A DIVISION OF GUY F. ATKINSON CO.
DARIEN, CONNECTICUT

SHEET TITLE
PIER No. 5 AND 6 COLUMN DETAILS

CLINE AVENUE EXTENSION OVER INDIANA HARBOR CANAL
BRIDGE FILE: 912-45-2548 CONTRACT NO. B-11612
INDIANA STATE HIGHWAY COMMISSION

SHEET N.
303