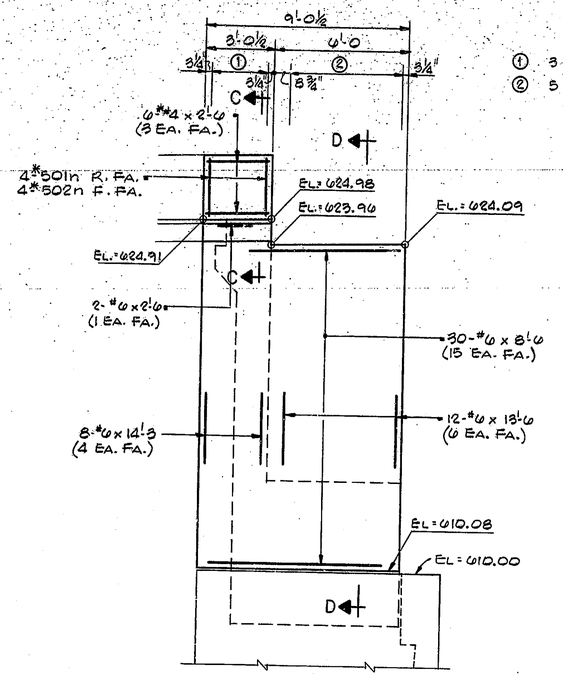

WING "A" ELEVATION
SCALE 3/8" = 1'-0

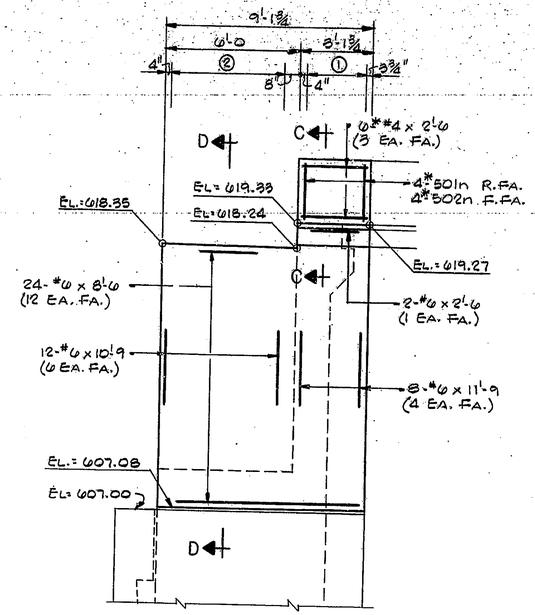

WING "B" ELEVATION
SCALE 3/8" = 1'-0

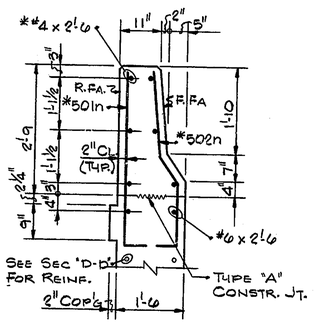

SECTION C-C
SCALE 3/8" = 1'-0

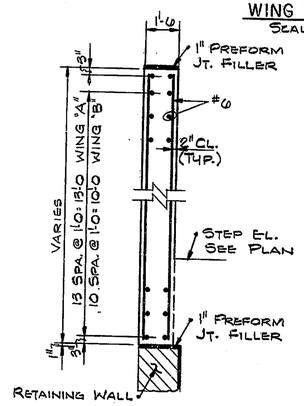

SECTION D-D
SCALE 3/8" = 1'-0

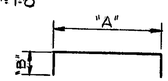

MARK	"A"	"B"	"L"
* 503n	1'-2	12'-6	26'-2
402n	7'-2	8"	8'-6
403n	7'-1	1'-3	9'-7
* 406n	1'-1	2'-3	3'-7
408n	2'-8	1'-6	5'-8

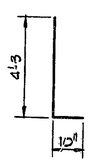

*501n X 5'-1

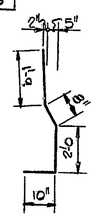

*502n X 5'-3

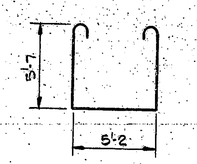

401n X 17'-4

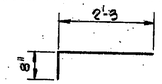

*407n X 2'-11

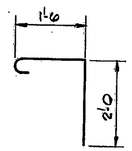

*405n X 4'-0

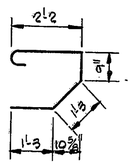

*404n X 5'-5

BILL OF MATERIALS

E.B.L. REINFORCING STEEL			
SIZE & MARK	Nº OF BARS	LENGTH	WEIGHT (LBS.)
#8	22	35'-0	
#8	22	33'-9	
	TOTAL #8		4,038
#6	8	14'-3	
#6	12	13'-6	
#6	30	8'-6	
#6	2	2'-6	
	TOTAL #6		805
* 501n	4	5'-1	
* 502n	4	5'-3	
* 503n	64	26'-2	
#5	8	33'-6	
* #5	34	32'-6	
	TOTAL #5 E.C.		2992
	TOTAL #5		280
401n	88	17'-4	
402n	95	8'-6	
403n	10	9'-7	
* 404n	64	5'-5	
* 405n	64	4'-0	
* 406n	9	5'-7	
* 407n	2	2'-11	
408n	60	5'-8	
#4	4	16'-6	
#4	4	13'-6	
#4	4	12'-6	
#4	4	10'-9	
#4	4	9'-6	
* #4	6	2'-6	
	TOTAL #4 E.C.		718
	TOTAL #4		1751
	TOTAL E.C. REINF.		3660
	TOTAL REINF.		1751
CONCRETE (f'_c=4000 PSI)			CYS.
CLASS "A" CONC.			
POUR Nº 1			45.0
POUR Nº 2			31.2
POUR Nº 3			44.6
POUR Nº 4			4.5
POUR Nº 5			23.1
POUR Nº 7			13.3
TOTAL CLASS "A" CONC.			161.7
CLASS "C" CONC			
POUR Nº 6			0.4
MISCELLANEOUS			QTY.
22 HIGH CAPACITY PILES @ 105 LFT. EA. APPROX.			2310 LFT
** 22 STEEL PIPE SLEEVES @ 80 LFT. EA. APPROX			1760 LFT.

W.B.L. REINFORCING STEEL			
SIZE & MARK	Nº OF BARS	LENGTH	WEIGHT (LBS.)
#8	22	41'-6	
#8	22	40'-6	
	TOTAL #8		4,817
#6	8	11'-9	
#6	12	10'-9	
#6	24	8'-6	
#6	2	2'-6	
	TOTAL #6		649
* 501n	4	5'-1	
* 502n	4	5'-3	
* 503n	77	26'-2	
* #5	34	33'-3	
#5	8	33'-0	
	TOTAL #5 E.C.		3536
	TOTAL #5		325
401n	104	17'-4	
402n	115	8'-6	
403n	10	9'-7	
* 404n	77	5'-5	
* 405n	77	4'-0	
* 406n	9	5'-7	
* 407n	2	2'-11	
408n	60	5'-8	
#4	4	19'-6	
#4	4	15'-9	
#4	4	14'-9	
#4	4	14'-0	
#4	4	13'-3	
* #4	6	2'-6	
	TOTAL #4 E.C.		532
	TOTAL #4		2355
	TOTAL E.C. REINF		4068
	TOTAL REINF		3,146
CONCRETE (f'_c=4000 PSI)			CYS.
CLASS "A" CONC.			
POUR Nº 1			68.2
POUR Nº 2			22.5
POUR Nº 3			54.1
POUR Nº 4			4.4
POUR Nº 5			27.2
POUR Nº 7			16.0
TOTAL CLASS "A" CONC.			192.4
CLASS "C" CONC			
POUR Nº 6			0.4
MISCELLANEOUS			QTY.
26 HIGH CAPACITY PILES @ 105 LFT. EA. APPROX.			2730 LFT.
26 STEEL PIPE SLEEVES @ 80 LFT. EA. APPROX.			2080 LFT.

NOTES:
FOR REINF. BAR NOTES, SEE BR. STD. C1.
* INDICATES EPOXY COATED REINF. REQ'D.
FOR TYPE "A" CONSTR. JT., SEE BR. STD. C3.
FOR ADDITIONAL NOTES & DETAILS, SEE SHEET 201.
△** SEE DETAIL 'A', SHEET No. 201.

N.	REVISION	DATE
△	ADD ** NOTE	2/1/88

APPROVED FOR CONSTRUCTION
J. D. Mattis
J. D. MATTIS
Engineer of Bridge Plans
3-9-83

T. Y. LIN INTERNATIONAL
STRUCTURAL ENGINEERS
REID, QUEBE, ALLISON, WILCOX AND ASSOCIATES INC.
CONSULTING ENGINEERS
APRIL 24, 1980

HUMAN D. PATEL REGISTERED No. 13050 STATE OF INDIANA PROFESSIONAL ENGINEER

WALSH CONSTRUCTION COMPANY
A DIVISION OF GUY F. ATKINSON CO.
DARIEN, CONNECTICUT

SHEET TITLE
BENT Nº 30 E.B.L. & W.B.L. DETAILS

CLINE AVENUE EXTENSION OVER INDIANA HARBOR CANAL
BRIDGE FILE: 912-45-2546 CONTRACT NO. B-11612
INDIANA STATE HIGHWAY COMMISSION

SHEET N.
227