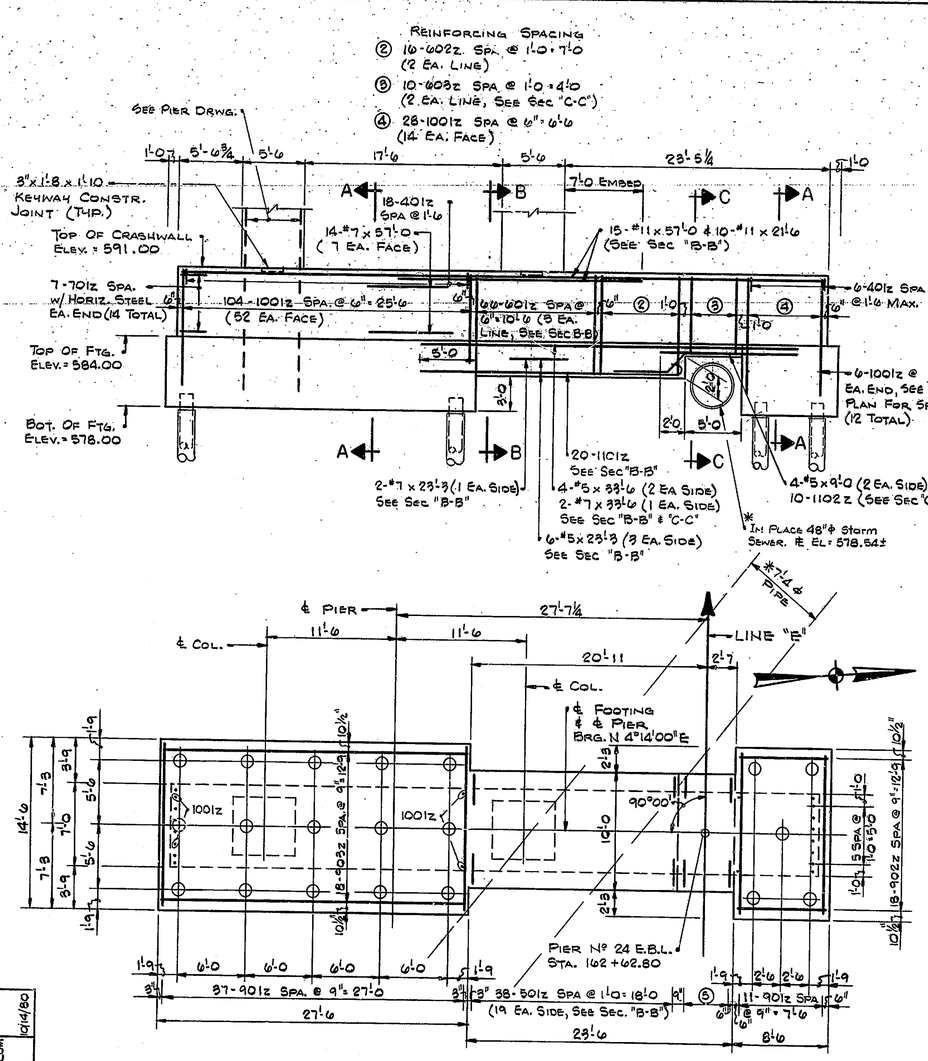

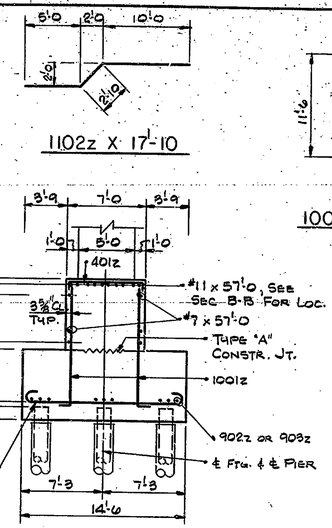

SECTION "A-A"
SCALE 3/16" = 1'-0

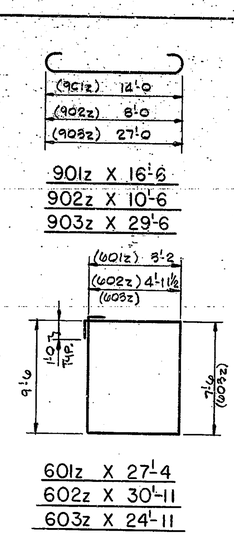

BILL OF MATERIALS

REINFORCING STEEL			
SIZE & MARK	Nº OF BARS	LENGTH	WEIGHT (LBS.)
1101z	20	24'-10	
1102z	10	17'-10	
#11	15	57'-0	
#11	10	21'-6	
	TOTAL #11		9,272
1001z	144	13'-4	
	TOTAL #10		8,262
901z	48	16'-6	
902z	18	10'-6	
903z	18	29'-6	
	TOTAL #9		5,141
701z	14	11'-0	
#7	14	57'-0	
#7	2	33'-6	
#7	2	23'-3	
	TOTAL #7		2,178
601z	66	27'-4	
602z	16	30'-11	
603z	10	24'-11	
	TOTAL #6		3,827
501z	38	8'-0	
502z	10	6'-1	
#5	4	33'-6	
#5	6	23'-3	
#5	4	9'-0	
	TOTAL #5		703
401z	24	8'-1	
	TOTAL #4		130
	TOTAL REINF		29,513
CONCRETE (f'_c = 4000 psi)			C.Y.S.
TOTAL FTG. CONC.			138.4
SUBSTRUCTURE CONC. (CRASHWALL)			104.4
MISCELLANEOUS			QTY.
20-HIGH CAPACITY PILES @ 79 LFT. EA. (APPROX.)			1580 LFT.
20-STEEL PIPE SLEEVES @ 60 LFT. EA.			1200 LFT.

MARK	"A"	"B"	"L"
401z	6'-9	8"	8'-1
501z	2'-6	2'-9	8'-0
701z	6'-8	2'-2	11'-0
502z	7"	2'-9	6'-1

PLAN
SCALE 3/16" = 1'-0

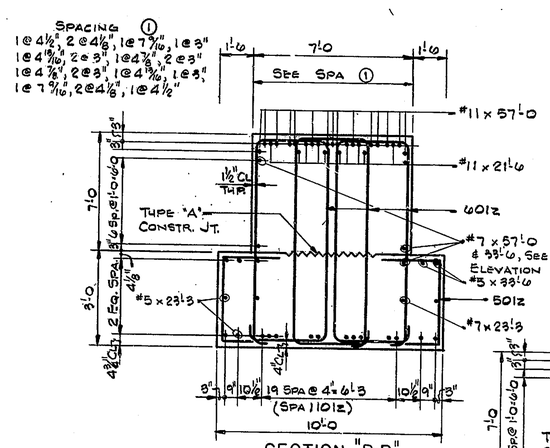

SECTION "B-B"
SCALE 3/8" = 1'-0

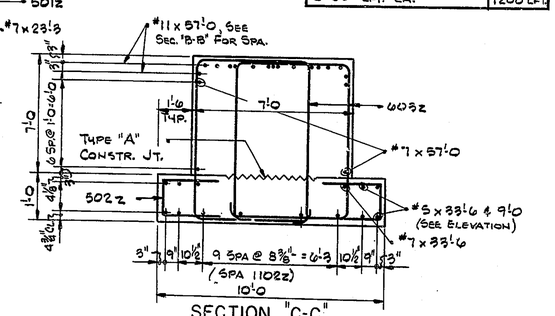

SECTION "C-C"
SCALE 3/8" = 1'-0

NOTES:

FOR REINF. BAR NOTES, SEE BR. STD. C1.
FOR ADDITIONAL NOTES AND DETAILS, SEE SHEET Nº 201.
FOR TYPE "A" CONSTR. JT., SEE BR. STD. C3.
STEEL PIPE SLEEVES SHALL BE CORED TO 7'-4 ϕ PIPE ℄ ELEV. MIN.
* LOCATION OF THIS LINE IS APPROXIMATE ONLY. CONTRACTOR TO TAKE NECESSARY PRECAUTIONS DURING FOUNDATION EXCAVATION.

N.	REVISION	DATE
△	REVISED TO ACCOM. MOVED 48"ϕ STORM SEWER	10/14/80

T. Y. LIN INTERNATIONAL
STRUCTURAL ENGINEERS

REID, QUEBE, ALLISON, WILCOX AND ASSOCIATES INC.
CONSULTING ENGINEERS
SEPT. 29, 1980

WILLIAM H. HUSTED REGISTERED No. 13050 STATE OF INDIANA PROFESSIONAL ENGINEER

WALSH CONSTRUCTION COMPANY
A DIVISION OF GUY F. ATKINSON CO.
DARIEN, CONNECTICUT

SHEET TITLE
PIER Nº 24 E.B.L. FOOTING DETAILS

CLINE AVENUE EXTENSION OVER INDIANA HARBOR CANAL
BRIDGE FILE: 812-45-2546 CONTRACT NO. B-11512
INDIANA STATE HIGHWAY COMMISSION

SHEET N.
220A