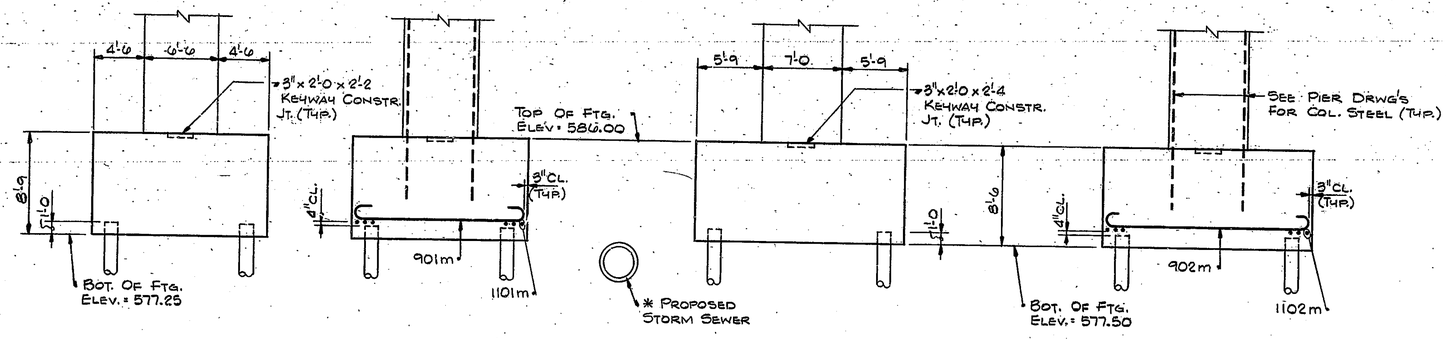

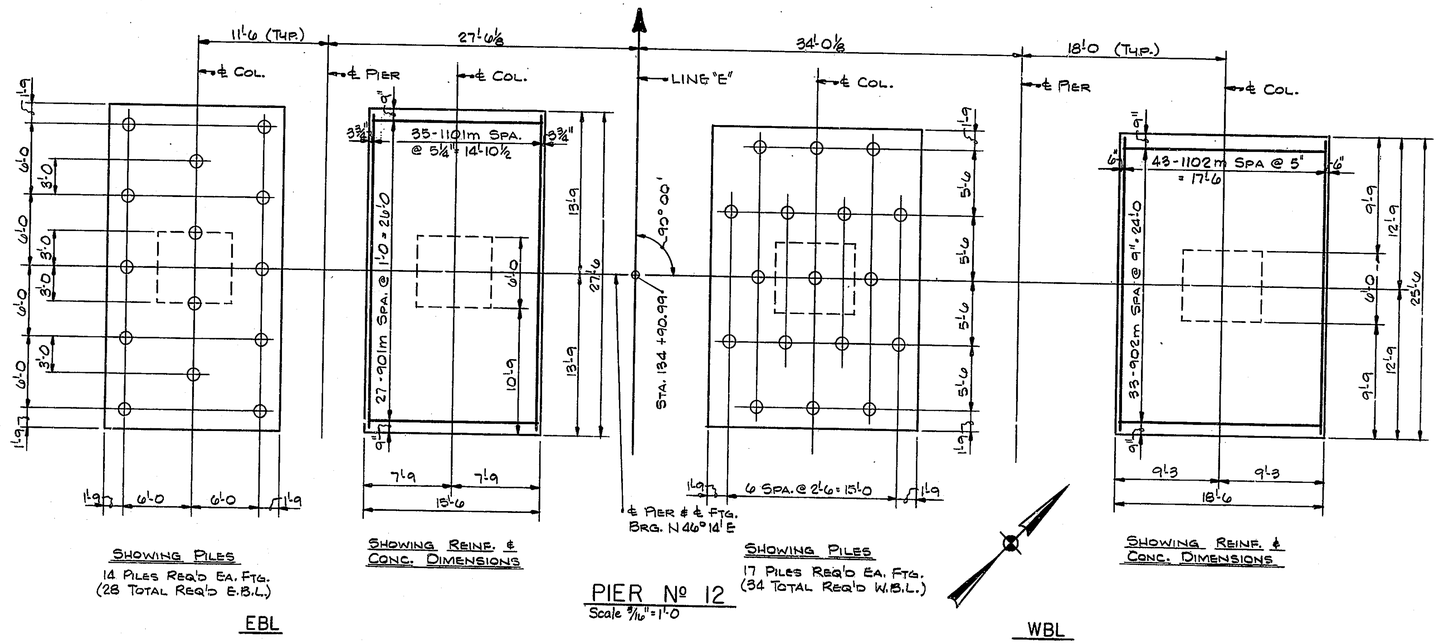

SHOWING PILES
14 PILES REQ'D EA. FTG.
(28 TOTAL REQ'D E.B.L.)

SHOWING REINF. & CONC. DIMENSIONS

SHOWING PILES
17 PILES REQ'D EA. FTG.
(34 TOTAL REQ'D W.B.L.)

SHOWING REINF. & CONC. DIMENSIONS

EBL

PIER Nº 12
Scale 3/16" = 1'-0

WBL

BILL OF MATERIALS

REINFORCING STEEL			
SIZE & MARK	Nº OF BARS	LENGTH	WEIGHT (LBS)
1101m	70	30'-2	
1102m	86	28'-2	
	TOTAL #11		24,090
901m	54	17'-6	
902m	66	20'-6	
	TOTAL #9		7,813
	TOTAL REINF.		31,903
CONCRETE (f'_c = 4000 PSI)			CYS.
FTG'S E.B.L. 2 @ 138.1 EA			276.2
FTG'S W.B.L. 2 @ 148.5 EA			297.0
TOTAL			573.2
MISCELLANEOUS			QTY.
28 HIGH CAPACITY PILES @ 109 Lft. EA. (E.B.L.)			3052 Lft.
34 HIGH CAPACITY PILES @ 110 Lft. EA. (W.B.L.)			3740 Lft.

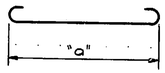

MARK	"a"	L
1101m	27'-0	30'-2
1102m	25'-0	28'-2
901m	15'-0	17'-6
902m	18'-0	20'-6

NOTES:

FOR REINFORCING BAR NOTES, SEE BR STD. C1.
FOR ADDITIONAL NOTES AND DETAILS, SEE SHT. 201
* LOCATION OF THIS LINE APPROXIMATE ONLY.
CONTRACTOR TO TAKE NECESSARY PRECAUTIONS DURING FOUNDATION EXCAVATION.

N. | REVISION | DATE

T. Y. LIN INTERNATIONAL
STRUCTURAL ENGINEERS

REID, QUEBE, ALLISON, WILCOX AND ASSOCIATES INC.
CONSULTING ENGINEERS

APRIL 24, 1980

HAMAN U. PATEL REGISTERED No. 13050 STATE OF INDIANA PROFESSIONAL ENGINEER

WALSH CONSTRUCTION COMPANY
A DIVISION OF GUY F. ATKINSON CO.
DARIEN, CONNECTICUT

SHEET TITLE
PIER Nº 12 E.B.L. & W.B.L. FOOTING DETAILS

CLINE AVENUE EXTENSION OVER INDIANA HARBOR CANAL
BRIDGE FILE: 912-45-2546 CONTRACT NO. B-11812
INDIANA STATE HIGHWAY COMMISSION

SHEET N.
212