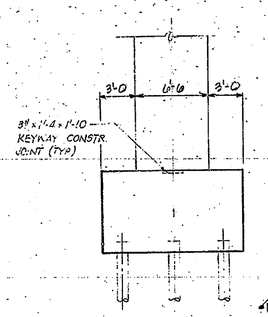

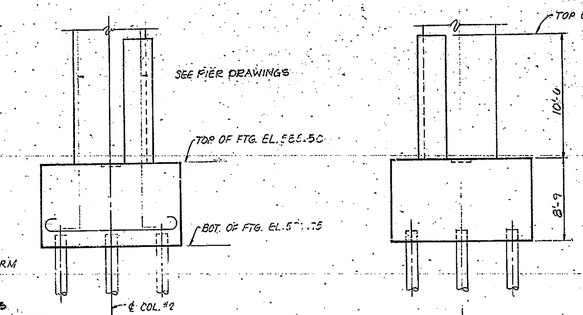

ELEVATION
SCALE: 3/16" = 1'-0

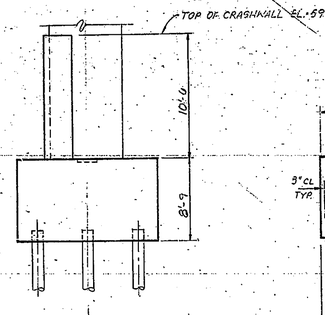

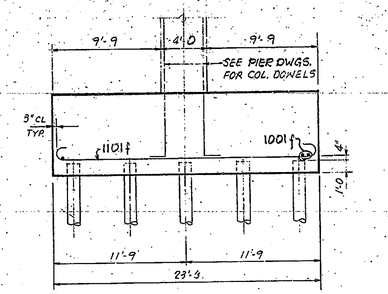

SECTION "A-A"
SCALE: 3/16" = 1'-0

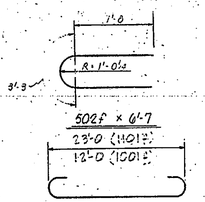

502f × 6'-7
23'-0 (110 1 f)
12'-0 (100 1 f)

110 1 f × 26'-3
100 1 f × 14'-10

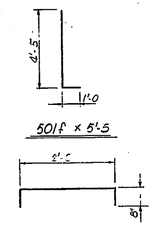

501f × 5'-5

401f × 3'-6

PROP. STORM SEWER

LOCATION OF THIS LINE IS APPROXIMATE ONLY. CONTRACTOR TO TAKE NECESSARY PRECAUTIONS DURING FOUNDATION EXCAVATION.

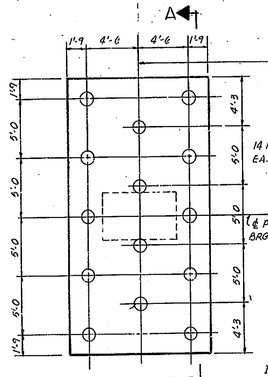

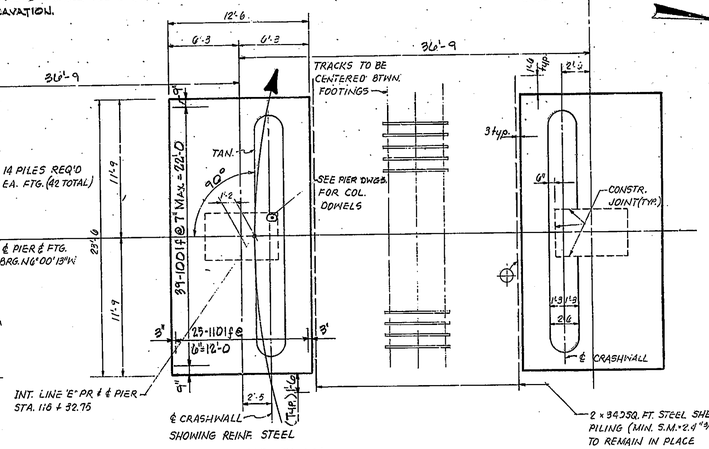

FOOTING PLAN
SCALE: 3/16" = 1'-0

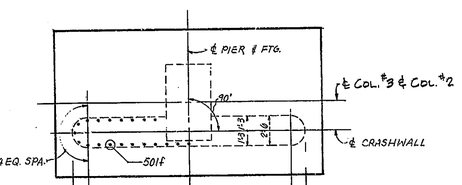

FOOTING PLAN
SCALE: 3/16" = 1'-0

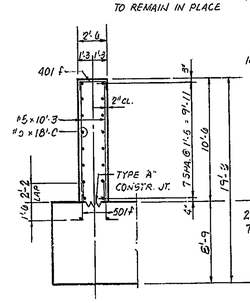

SECTION "B-B"
SCALE: 3/16" = 1'-0

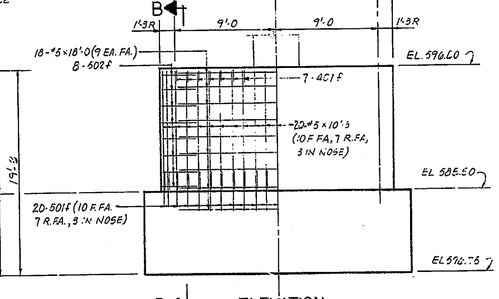

ELEVATION
SCALE: 3/16" = 1'-0

BILL OF MATERIALS

REINFORCING STEEL			
SIZE & MARK	Nº OF BARS	LENGTH	WEIGHT (LBS)
1101f	78	26'-2	
TOTAL #11			10,428
1001f	117	14'-10	
TOTAL #10			7,469
501f	78	5'-5	
502f	32	6'-7	
#5	36	18'-0	
#5	78	10'-3	
TOTAL #5			2,170
401f	28	3'-6	
TOTAL #4			65
TOTAL REINF. STEEL			20,132
CONCRETE (f'_c = 4000 P.S.I.)			
CRASHWALLS @ COL. #2 & #3: 2 @ 16.3 CUS. EA. =			32.6 CUS.
⊕ FTG. CONC., 3 @ 95.2 EA. =			289.4 CUS.
MISCELLANEOUS			
42 HIGH CAPACITY PILES @ 110 L/FT. LONG EA. (APPROX) =			4620 L/FT.
STEEL SHEET PILING			6505/FT.

⊕ INCLUDES 3.8 CUS. ADDITIONAL CONCRETE BETWEEN SHEET PILING & FOOTINGS.

NOTES:
FOR TYPE "A" CONSTR. JOINT, SEE BRIDGE STD. C3.
FOR REINFORCING BAR NOTES, SEE BRIDGE STD. C2.
FOR ADDITIONAL FOOTING, SHEET PILING, & HIGH CAPACITY PILE NOTES & DETAILS, SEE SHEET 201.

N	REVISION	DATE

T. Y. LIN INTERNATIONAL
STRUCTURAL ENGINEERS

REID, QUEBE, ALLISON, WILCOX AND ASSOCIATES INC.
CONSULTING ENGINEERS

JULY 26, 1979

RAMON R. REID REGISTERED No. 13050 STATE OF INDIANA PROFESSIONAL ENGINEER

WALSH CONSTRUCTION COMPANY
A DIVISION OF GUY F. ATKINSON CO.
DARIEN, CONNECTICUT

SHEET TITLE
PIER Nº6 FOOTING & CRASHWALL DETAILS

CLINE AVENUE EXTENSION OVER INDIANA HARBOR CANAL
BRIDGE FILE: 912-45-2546 CONTRACT NO. 8-11612 INDIANA STATE HIGHWAY COMMISSION

SHEET N.
205
OF