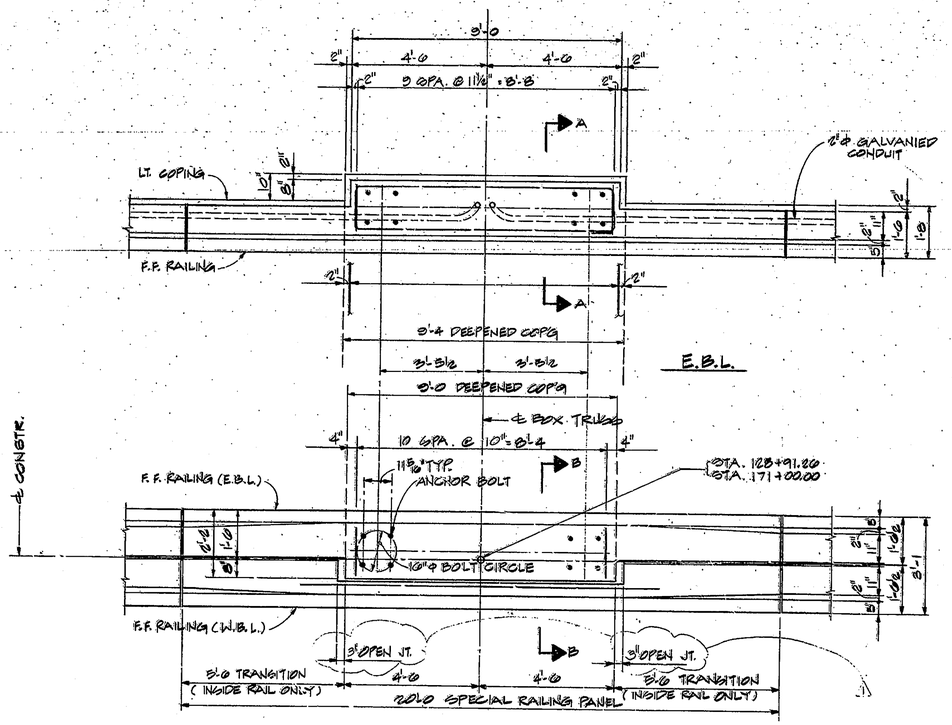

SIGN SUPPORT PLAN (BOX TRUSS)
SCALE ½" = 1'-0

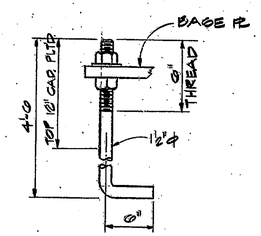

ANCHOR BOLT DETAIL
NO SCALE

NOTE:
THERE ARE TWO LOCATIONS OF BOX TRUSS
STA 128+91 EBL
STA 171+00 EBL

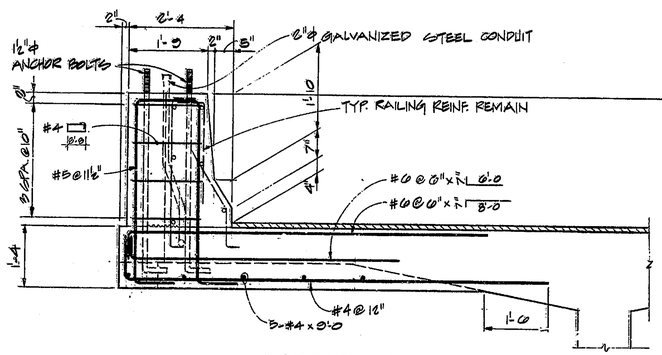

SECTION A-A
¾" = 1'-0

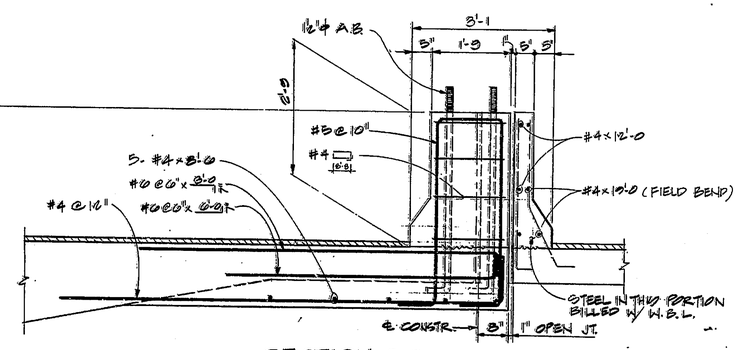

SECTION B-B
¾" = 1'-0

APPROVED FOR CONSTRUCTION
W. B. ABBOTT
Assistant Engineer of Bridge Design 10-26-81

NO.	REVISION	DATE
1	OPEN JOINT	SEPT '81

T. Y. LIN INTERNATIONAL
STRUCTURAL ENGINEERS

REID, QUEBE, ALLISON, WILCOX AND ASSOCIATES INC.
CONSULTING ENGINEERS

WALSH CONSTRUCTION COMPANY
A DIVISION OF GUY F. ATKINSON CO.
DARIEN, CONNECTICUT

SHEET TITLE
BOX TRUSS SUPPORT DETAILS

CLINE AVENUE EXTENSION OVER INDIANA HARBOR CANAL
BRIDGE FILE: 912-45-2545 CONTRACT NO. B-11612 INDIANA STATE HIGHWAY COMMISSION

SHEET N.
1052