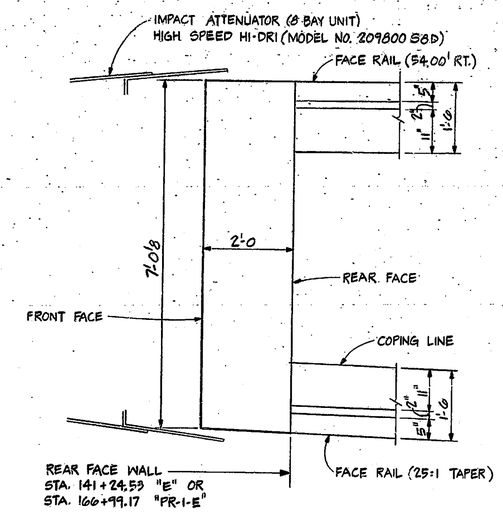

PLAN AT IMPACT ATTENUATOR
N.T.S.

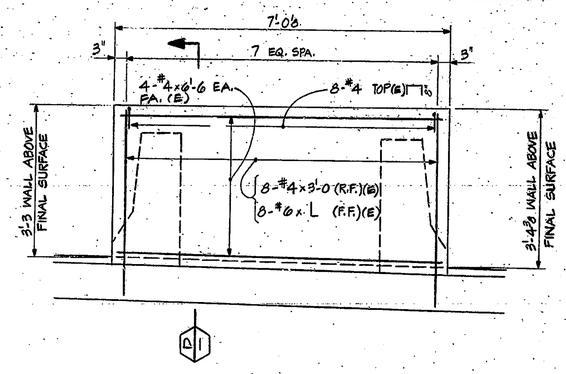

ELEVATION AT IMPACT ATTENUATOR
N.T.S.

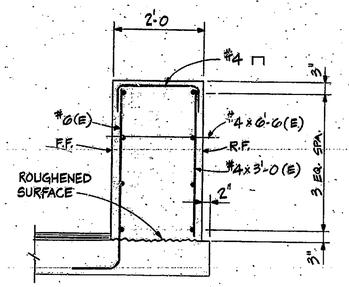

SECTION D
N.T.S.

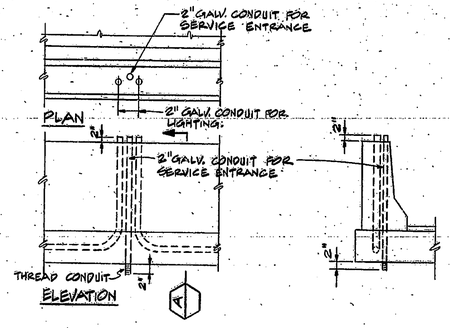

DETAIL "A" AT PIER 12' & PIER 12 SECTION A

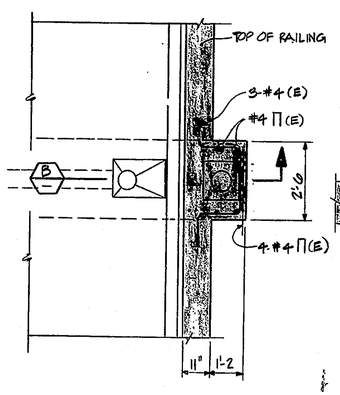

PLAN AT LIGHTSTAND A
½"=1'-0

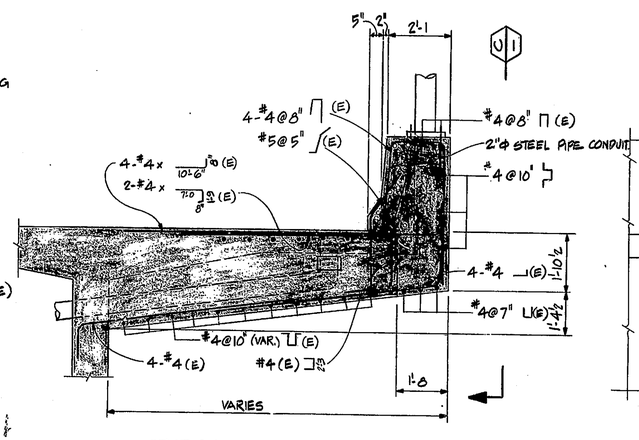

SECTION B
½"=1'-0

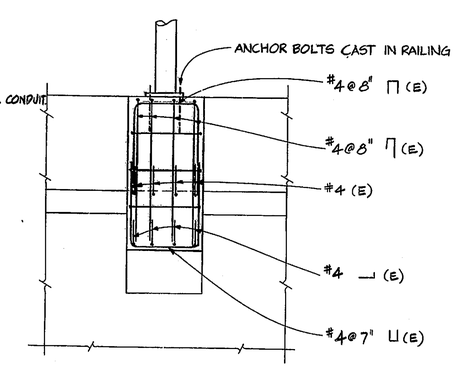

ELEVATION C
½"=1'-0

NOTES:

1. REFER TO SHEETS 102 THRU 113 FOR MARK INDICATING LIGHTPOST LOCATIONS.

N.	REVISION	DATE

Rev 8-27-80 Add Service Entr @ Pier 12

T. Y. LIN INTERNATIONAL
STRUCTURAL ENGINEERS

REID, QUEBE, ALI ISON, WILCOX AND ASSOCIATES INC.
CONSULTING ENGINEERS

WALSH CONSTRUCTION COMPANY
A DIVISION OF GUY F. ATKINSON CO.
DARIEN, CONNECTICUT

SHEET TITLE
IMPACT ATTENUATOR AND LIGHTSTAND DETAILS

CLINE AVENUE EXTENSION OVER INDIANA HARBOR CANAL
BRIDGE FILE: 912-45-2546 CONTRACT NO. B-11612 INDIANA STATE HIGHWAY COMMISSION

SHEET N.
1051