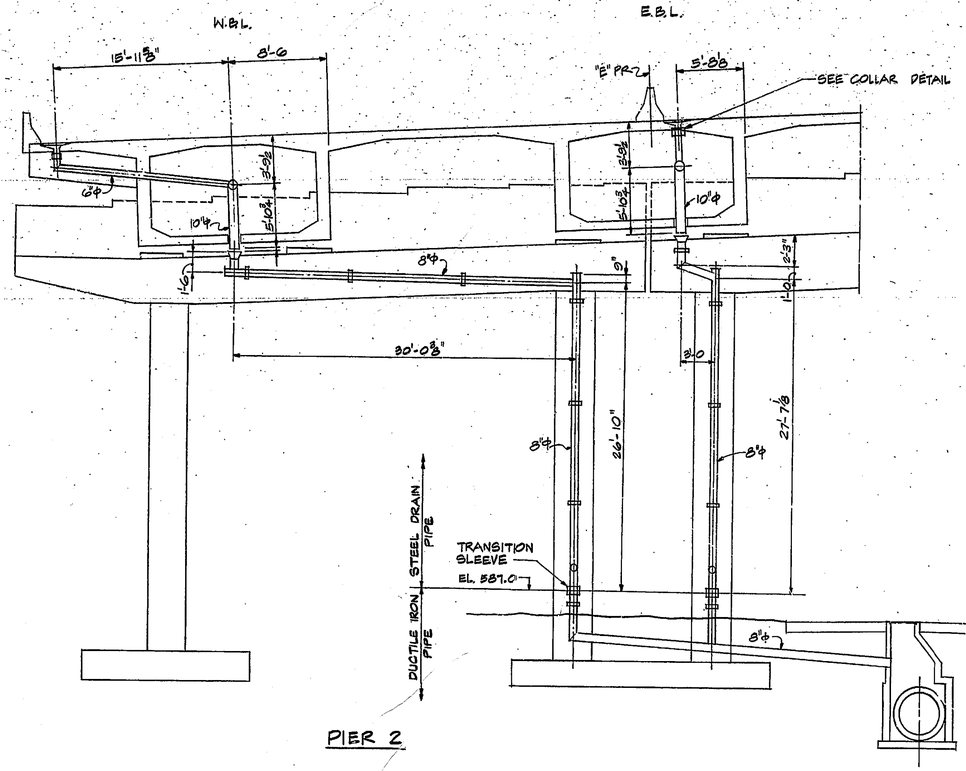

PIER 2

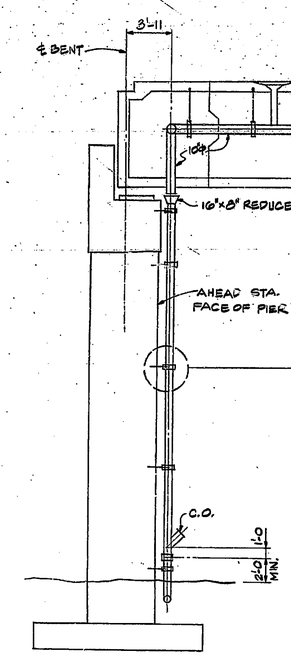

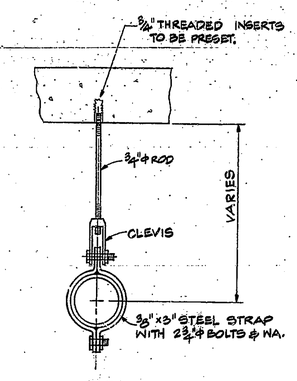

TYP. PIPE HANGER DETAIL

HANGERS TO BE SPACED @ 10'-0 MAX.

1½"=1'-0"

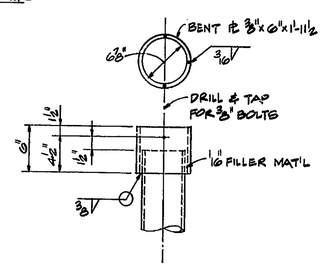

TYP. COLLAR DETAIL

1½"=1'-0"

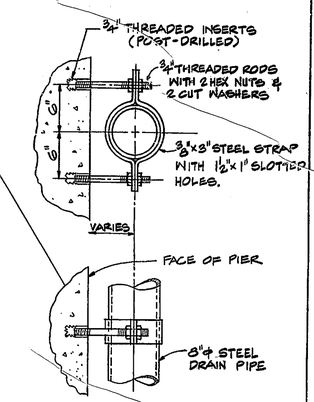

TYP. PIPE CONNECTION DETAIL

CLAMPS TO BE SPACED @ 10'-0 MAX.

1½"=1'-0"

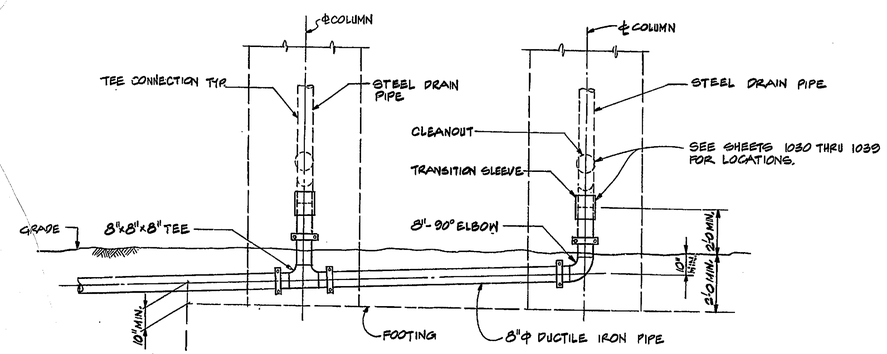

TYPICAL CONNECTIONS

⅜"=1'-0"

NOTES:

1. CONTRACTOR SHALL FURNISH LENGTHS OF STEEL & DUCTILE IRON PIPE AS DETERMINED FROM INDICATED GEOMETRY AS SHOWN ON SHT 102 THRU 112 AND 1030 THRU 1039.
2. TRANSITION SLEEVES, ELBOWS, ANCHOR STRAPS, PIPE CONNECTIONS, BOLTS, REDUCERS, HANGARS AND ROADWAY DRAINS SHALL BE FURNISHED BY THE CONTRACTOR AS APPROVED BY THE ENGINEER.
3. SEE TYPICAL DRAIN GEOMETRY AND REINFORCING ON SHT. 1038 & 1050.

N	REVISION	DATE

T. Y. LIN INTERNATIONAL
STRUCTURAL ENGINEERS

REID, QUEBE, ALLISON, WILCOX AND ASSOCIATES INC.
CONSULTING ENGINEERS

T. Y. LIN REGISTERED No. 18266 STATE OF INDIANA PROFESSIONAL ENGINEER

WALSH CONSTRUCTION COMPANY
A DIVISION OF GUY F. ATKINSON CO
DARIEN, CONNECTICUT

SHEET TITLE

SUPERSTRUCTURE DRAINAGE - PIER 2 & STANDARD DETAILS

CLINE AVENUE EXTENSION OVER INDIANA HARBOR CANAL
BRIDGE FILE. 912-45-2548 CONTRACT NO. 8-11612 INDIANA STATE HIGHWAY COMMISSION

SHEET N

1030