PART 2

Hydrology and Hydraulics

NOTE: Revisions to these chapters occurring after January 1, 2013 appear in this manual. Users should consult Design Memoranda listed below and on the title sheet of each affected chapter for details related to revisions.

Design Memorandum	Revision Date	Sections Affected
13-01	Jan. 2013	201-1.02
13-04	Mar. 2013	203-2.02(10), 201-1.05 through 201-1.08
13-05	Mar. 2013	203-2.02(02)
13-11	May 2013	201-1.07, 203-2.02(09), 203-2.02(15), 203-2.06(04), 203-4.04(06), Figure 203-4E, Figure 203-4 I
14-02	Feb. 2014	202-3.03, Figure 202-3B, Figure 202-3C
15-06	Mar. 2015	205-3.02(03)
16-19	May 2016	203-2.02(02)
16-21	May 2016	203-2.02(13), Figure 203-2F
16-27	Jul. 2016	205-2.0, 205-3.0, 205-5.0, Figure 205-1A

CHAPTER 201

General Hydrology Information

Design Memorandum	Revision Date	Sections Affected
13-01	Jan. 2013	201-1.02
13-04	Mar. 2013	201-1.05 through 201-1.08, 203-2.02(10)
13-11	May 2013	201-1.07

TABLE OF CONTENTS

LIST OF FIGURES 3

201-1.0 INTRODUCTION 4
- 201-1.01 General Policies 4
- 201-1.02 Responsibilities 5
- 201-1.03 Documentation and Procedures 7
- 201-1.04 Legal Considerations 7
  - 201-1.04(01) Legal Aspects 7
  - 201-1.04(02) Local-Law Policy 9
  - 201-1.04(03) Legal Drains 9
- 201-1.05 Pipe Material Selection [Added Mar. 2013] 9
  - 201-1.05(01) Pipe Material Selection Software Input 9
  - 201-1.05(02) Pipe Material Selection Software Output 10
- 201-1.06 Structure Site Analysis [Added Mar. 2013] 11
  - 201-1.06(01) Cover 11
  - 201-1.06(02) Pipe-Service-Life Duration 11
  - 201-1.06(03) Abrasive or Non-Abrasive Site Designation 11
  - 201-1.06(04) Structure pH 11
- 201-1.07 Pipe-Extension Structure [Added Mar. 2013, Rev. May 2013] 14
- 201-1.08 Draintile Structure [Added Mar. 2013] 15
- 201-1.09 References 16
  - 201-1.09(01) Uncited References 16
  - 201-1.09(02) Cited References 16

201-2.0 DEFINITIONS 17

201-3.0 NOTATIONS 36

FIGURES [Added Mar. 2013] 38

LIST OF FIGURES

Figure	Title
201-1A	Structure pH Determination Procedure, Proposed Mainline Culverts and Other Culverts in Natural Channels, Project in Area Where Map pH = 7.0 [Added Mar. 2013]
201-1B	Structure pH Determination Procedure, Proposed Storm Drain Structures, Project in Area Where Map pH = 7.0 [Added Mar. 2013]
201-1C	Structure pH Determination Procedure, Proposed Side Ditch Culverts, Project in Area Where Map pH = 7.0 [Added Mar. 2013]
201-1D	Structure pH Determination Procedure, Poposed Mainline Culverts and Other Culverts in Natural Channels, Project in Area Where Map pH < 7.0 [Added Mar. 2013]
201-1E	Structure pH Determination Procedure, Proposed Storm Drain Structures, Project in Area Where Map pH < 7.0 [Added Mar. 2013]
201-1F	Structure pH Determination Procedure, Proposed Side Ditch Culverts, Project in Area Where Map pH < 7.0 [Added Mar. 2013]
201-1G	pH Map [Added Mar. 2013]

CHAPTER 201

GENERAL HYDROLOGY INFORMATION

201-1.0 INTRODUCTION

For a highway application, hydrology is the science of estimating surface-water runoff that will arrive at a specific location. Hydraulics is the science of collecting, transporting, and disposing of surface water originating on or near the highway right of way or flowing in a stream crossing or bordering such right of way. Drainage design is one of the essential elements of highway construction. A large percent of highway construction costs is devoted to culverts, bridges, or other drainage structures.

The designer must rely on engineering judgment, experience, and common sense to achieve meaningful results. Methodologies available are only tools to aid in making judgments. The designer must understand each method that is employed, especially its limitations.

Drainage design should address drainage issues that can result due to highway construction through the activities as follows:

1. anticipating the amount and frequency of storm runoff;

2. determining natural points of concentration and discharge and other hydraulic controls; and

3. providing the most efficient facility consistent with cost, the importance of the highway, maintenance, and legal obligations.

In drainage design, the primary objectives are to mitigate off-site flooding due to a new highway project, and to protect the highway against damage from surface waters, considering the effect of the project on traffic and property. Improvements in drainage outside the highway right of way will not be considered unless there is an advantage to the transportation system.

201-1.01 General Policies

The purpose of this Section is to outline specific policies that guide and determine the variables which influence drainage design. An adequate drainage design is defined as one which satisfies INDOT policies. Hydrologic and hydraulic analyses, and engineering evaluation of suitable alternatives, are considered part of the design of a highway-drainage facility. All final hydraulic

analysis and calculations should be signed and sealed by a professional engineer licensed in Indiana. Final hydraulic calculations are defined as calculations to be used for construction.

The engineering design process involves consideration and balancing of the following:

1. legal considerations;
2. flood hazards to highway users or neighboring property owners;
3. hydraulic efficiencies;
4. costs, such as construction, serviceability, maintenance, life cycle, right of way, etc.;
5. environmental concerns;
6. overtopping flood consideration in addition to design flood; and
7. other site-specific concerns.

201-1.02 Responsibilities

This section outlines the responsibilities for design and review of a highway-drainage facility. However, INDOT reserves the right to review each aspect of the drainage design at any point during plan development.

Design responsibilities are as follows.

1. Central-Office-Designed Project.

   For a consultant-designed project, the consultant will be responsible for all hydraulics for IPOC work. The Office of Hydraulics will review each bridge, detention pond, or culvert of diameter 36 in. or greater.

   For an in-house-designed project, all hydraulics will be performed by the Office of Hydraulics.

   For a bridge-rehabilitation project, the Office of Hydraulics will review scour reports.

2. District-Designed Project.

   For a consultant-designed project, the consultant will perform all hydraulics. The Office of Hydraulics will review each bridge, detention pond, or culvert of diameter 36 in. or greater.

For an in-house-designed project, the district will design each culvert. The Office of Hydraulics will review each culvert of diameter 36 in. or greater. The Office of Hydraulics will design such culvert at the request of the district. All sizes and types of slip-liners should be sent to the Office of Hydraulics for design or review.

The Office of Hydraulics will perform the hydraulics for each bridge, storm drain, or detention pond.

3. Engineering Assessment.

For a consultant-developed report, the consultant will perform all hydraulics.

For an in-house-developed report the district may perform preliminary culvert hydraulics or request it from the Office of Hydraulics. The Office will perform preliminary hydraulics for a bridge, storm drain, or detention pond.

The Office of Hydraulics will perform hydraulics for an emergency replacement for operations.

The Office of Hydraulics will investigate drainage problems for operations.

The Office of Hydraulics will calculate scour for a problem bridge or design countermeasure.

4. Driveway Permit. The Office of Hydraulics will review the drainage calculations if desired. However, the district may elect to use its own personnel for the review.

5. Local-Public-Agency Project. The Office of Hydraulics will review hydraulics for each bridge, detention pond, or culvert of diameter 36 in. or greater.

6. Training.

   a. The Office of Hydraulics will periodically provide training regarding culvert hydraulics for district design personnel.

   b. The Office of Hydraulics will be available to answer questions from district design personnel regarding culvert hydraulics.

201-1.03 Documentation and Procedures

The purpose of providing documentation is to define the design procedure that was used, and to show how the final design and decisions were selected. The documentation should be viewed as the record of reasonable and prudent design analysis based on the best available technology. Documentation is an important part of the design or analysis of a drainage facility due to the following:

1. the importance of public safety;

2. justification of expenditure of public funds;

3. future reference where improvements, changes, or rehabilitations are made to the highway facility;

4. information leading to the development of defense in litigation; and

5. public information.

It may be necessary to refer to plans, specifications, or analyses after the actual construction has been completed. Documentation permits evaluation of the performance of a structure after a flood event to determine if the structure performed as anticipated, or to establish the cause of unexpected behavior. If the structure fails, the contributing factors should be identified so that recurring damage can be avoided.

The documentation requirements for hydrology and hydraulics are provided in their respective Chapter or Section for each drainage-facility type.

201-1.04 Legal Considerations

201-1.04(01) Legal Aspects

The drainage laws and rules that are applicable to a drainage facility are discussed below. It should not be treated as a basis for legal advice or legal decisions. It is not a summary of all existing drainage laws, and it is not intended as a substitute for legal counsel. The following generalizations can be made regarding drainage liability.

1. A goal in drainage-facility design should be to perpetuate natural drainage as practical.

2. The courts look with disfavor upon infliction of injury or damage that can be reasonably avoided by a prudent designer, including where some alteration in flow is legally permissible.

3. The descending order to law supremacy is Federal, State, and then local. Except as provided for in the statutes or constitution of a higher level of government, the higher level is not bound by laws, rules, or regulations of a lower level.

The designer is responsible for making the determination as to which agencies may have jurisdiction with regard to site-specific drainage requirements. Regulatory and local jurisdictions and requirements should be identified and investigated early in the project development and documented by the designer. This will also identify the potential regulatory requirements that may differ from INDOT design requirements. The procedure followed should be continuously documented throughout the review process.

The designer should have knowledge of updates and changes to regulations that can affect a drainage-facility project. Sources for legal information pertaining to drainage facilities include, but are not limited to, the following.

1. Federal Regulatory Agencies.

    a. FEMA, Federal Emergency Management Agency
    b. FHWA, Federal Highway Administration
    c. NRCS, Natural Resource Conservation Service
    d. USACE, United States Army Corp of Engineers
    e. USCG, United States Coast Guard
    f. USEPA, United States Environmental Protection Agency
    g. USFWS, United States Fish and Wildlife Service
    h. USGS, United States Department of the Interior, Geological Survey

2. State Regulatory Agencies.

    a. IDEM, Indiana Department of Environmental Management
    b. IDNR, Indiana Department of Natural Resources
    c. SHPO, State Historic Preservation Office

3. Local Agencies.

    a. City engineer
    b. Conservancy district

c. County drainage board
d. County surveyor

201-1.04(02) Local-Law Policy

INDOT will, as practical, satisfy local ordinances as a courtesy, especially if it can be done without imposing a burden on the State.

201-1.04(03) Legal Drains

Most counties have established a system of legal drains which are maintained by the county surveyor. State law grants each such county certain privileges where a project impacts an established legal drain. More detailed information on legal-drain regulations appears in IC 36-2-12-15 and IC 36-9-27.

201-1.05 Pipe Material Selection [Added Mar. 2013]

Pipe Materials Selection Software has been developed to perform the required material selection analysis for Type 1, 2, 3, or 5 pipe. Unless otherwise specified, material selection analysis is not required for a Type 4 pipe. The Pipe Material Selection software uses structure site information to determine the acceptable pipe materials for each structure for the specific site conditions. Input requirements are shown below. See Section 201-1.06, Structure Site Analysis for additional input information.

201-1.05(01) Pipe Material Selection Software Input

The input required for the Pipe-Material-Selection software includes the following:

1. required pipe type (see INDOT *Standard Specifications*);
2. required pipe-interior designation (smooth or corrugated), if applicable;
3. pipe size;
4. cover;
5. required service-life duration;
6. abrasive or non-abrasive site designation; and
7. structure pH

201-1.05(02) Pipe Material Selection Software Output

Software output may include the following:

1. Software Indicates No Acceptable Materials for Structure. If this occurs, the cause is likely to be incorrect-input-data entry. If a review of the input reveals that there are no errors, the designer must contact the INDOT Hydraulics Team for additional instructions.

2. Software Indicates Only One Acceptable Material for Structure. By definition, a pipe-type designation indicates that a contractor may select from a list of materials that have been determined to be acceptable for an individual structure. If the list includes only one acceptable material, the pipe-type designation is meaningless. If this occurs, the structure cannot refer to a pipe type.

3. Software Indicates Two or More Materials are Acceptable for Structure. By definition, a pipe-type designation remains appropriate for this structure. The protective coating or invert treatment for each corrugated metal pipe is considered to define a unique material. For example, a materials list indicating both zinc-coated corrugated steel pipe and zinc-coated corrugated steel pipe with bituminous-paved invert as acceptable is considered to include two materials.

4. Software Indicates More than One Corrugation Profile and Material Thickness Combination is Acceptable for Structure. If the Pipe-Material-Selection Software may indicates that more than one corrugation profile and material thickness combination is acceptable for a structure, then it is necessary to determine the optimum corrugation profile. The procedure for determining the optimum corrugation profile is as follows:

   a. Select the Profile with the Minimum Thickness. If the acceptable corrugation profiles require different material thicknesses, select the profile with the minimum thickness.

   b. Select the Smallest Profile. If all acceptable corrugation profiles require the same material thickness, select the smallest profile. By definition, a 2⅔" x ½" corrugation profile is considered smaller than a 3" x 1" profile.

201-1.06 Structure Site Analysis [Added Mar. 2013]

A Structure Site Analysis is required for each type 1, 2, 3, or 5 pipe structure. Unless otherwise specified, the analysis is not required for a type 4 pipe. The scope of the analysis is discussed in the following sections and is used as input for the Pipe Material Selection Software. See Section 201.-1.05 for additional information.

201-1.06(01) Cover

Cover is discussed in Section 203-202(09).

201-1.06(02) Pipe-Service-Life Duration

This indicates the desired length of service for the drainage structure. The duration is based on the functional classification of the mainline roadway. If the mainline roadway is a freeway or expressway, or is functionally classified as an arterial, the required service-life duration for each type 1, 2, 3, or 5 pipe structure is 75 years. If the mainline roadway is functionally classified as a collector or local road, the required service-life duration for each such structure is 50 years.

201-1.06(03) Abrasive or Non-Abrasive Site Designation

A site is considered abrasive if it is probable that runoff will transmit material which can damage the pipe. Each mainline culvert site or each site where a public-road-approach or drive culvert is installed in a natural channel is considered abrasive.

A storm-drain site or public-road-approach or drive culvert site on a constructed side-ditch line is considered non-abrasive. However, the designer must use judgment to confirm that abrasive elements are not likely to impact such a site. If the designer concludes that a storm-drain- or side-ditch-culvert site can have abrasive materials transported by runoff, an abrasive site designation must be assigned to each affected structure.

201-1.06(04) Structure pH

Acidic runoff may have contributed to service-life problems with a pipe structure. To mitigate these problems, the designer must determine a pH value for each type 1, 2, 3, or 5 pipe structure. The pH data may be provided in the Engineer's or Geotechnical Reports. The data should include the stream pH-test result for each type of existing structure as follows:

1. mainline culvert;
2. public-road-approach or drive culvert in a natural channel;
3. storm-drain-system outlet pipe; or
4. the most-downstream culvert on each constructed ditch line.

The designer will use the following guidelines to establish each proposed structure's pH value.

1. Culvert. Assign the data provided for each existing mainline culvert to the corresponding proposed pipe structure. Likewise, assign the data associated with each existing public-road-approach or drive culvert located in a natural channel to the corresponding proposed structure. Each proposed public-road-approach or drive culvert installed on a constructed ditch line should be assigned the report's pH value for the most-downstream culvert on the corresponding existing ditch line.

2. Storm Drain. If a proposed storm-drain system will replace an existing system, assign the pH value obtained at the existing system's outlet pipe to each pipe structure in the proposed system. If the proposed system is replacing an existing open-drainage system, apply the pH value collected at the most-downstream existing side-ditch culvert to each structure in the proposed system.

The final structure pH is the lowest of the following values.

1. Preliminary Field Check Plans pH Value. This value is obtained from one of the following sources.

   a. Engineer's Report.

   b. pH Testing. If pH data is not available from the Engineer's Report, the designer is required to perform pH testing of water samples taken at the structure. The scope of the testing required is below and is illustrated by the flowcharts included in the following figures.

201-1A	Structure pH Determination Procedure for Proposed Mainline Culvert or Other Culvert in Natural Channel (Area Where Map pH = 7.0)
201-1B	Structure pH Determination Procedure for Proposed Storm-Drain Structure (Area Where Map pH = 7.0)
201-1C	Structure pH Determination Procedure for Proposed Side-Ditch Culvert (Area Where Map pH = 7.0)
201-1D	Structure pH Determination Procedure for Proposed Mainline Culvert or Other Culvert in Natural Channel (Area Where Map pH < 7.0)

201-1E Structure pH Determination Procedure for Proposed Storm-Drain Structure (Area Where Map pH < 7.0)
201-1F Structure pH Determination Procedure for Proposed Side-Ditch Culvert (Area Where Map pH < 7.0)

c. pH Map. If the Engineer's Report does not provide structure pH data, and pH testing is not appropriate, Figure 201-1G, pH Map, is used to determine the Preliminary Field Check pH value.

2. Final Check Prints pH Value. This value is obtained from one of the following sources.

a. Geotechnical Report.

b. pH Testing. If a structure pH value is not available from the Geotechnical Report and testing is appropriate (see Item 1.b. above), pH testing of a water sample taken from the corresponding existing structure site is required.

c. pH Map. Use of the pH map is appropriate only if a structure pH value is not available from the two sources listed above.

3. Final Tracings pH Value. If the pH values from Items 1 and 2 for a structure are not within 0.5 of each other, a third value must be obtained for comparison. The third value is obtained from one of these two sources.

a. pH Testing. If pH testing is appropriate, testing of water samples at the corresponding existing structure is required.

b. pH Map. If pH testing is not appropriate, the pH map is the appropriate source for the third pH value.

Before pH testing is performed, the project location must be determined from Figure 201-1G, pH Map. If the project is located in a county with a posted 7.0 pH value, the testing scope is as follows:

1. Identify Structure Requiring Testing. The structure type to be considered for testing is as follows:

a. mainline culvert;
b. public-road-approach or drive culvert located in a natural channel;
c. outlet pipe of storm-drain system; or
d. the most downstream culvert on a constructed ditch line.

2. Structure Inspection. The testing process begins by inspecting the structure. If an existing structure does not show signs of corrosion, pH testing is not required. If the structure shows signs of corrosion, a water sample at the structure must be obtained and the pH of the sample must be determined.

If the project is located in a county with a pH map value < 7.0, the structure-inspection step described in Item 2 does not apply. Each structure identified in Item 1 requires obtaining a water sample for pH determination.

The following apply to the determination of a structure pH value, regardless of the source of the data.

1. Maximum Structure pH Value. The pH value for a structure cannot exceed the map pH value for the project location. If the pH value obtained from a report on pH testing is greater than the map pH value, the obtained value is ignored and the map value is used for the structure.

2. Precision of pH Value. The pH value is expressed to the nearest 0.5. If a report or pH testing yields a value that is more precise, the structure pH is rounded to the next lower 0.5.

3. Lack of Sample Availability. If pH testing is required, but a sample is not available at a structure site, the structure pH value will equal the value for the nearest adjacent structure. If a water sample is not available at an appropriate structure within the project limits, the pH map value is used for all structures.

4. Storm-Drain-Structure pH Determination. The structure pH assigned to the outlet pipe of a storm-drain system is assigned to each structure in the proposed system.

5. Side-Ditch-Culvert Structure pH Determination. The structure pH assigned to the most downstream pipe in a segment of side ditch is assigned to each culvert installed in that ditch line segment.

201-1.07 Pipe-Extension Structure [Added Mar. 2013, Rev. May 2013]

By definition, a pipe-extension structure is a structure that involves attaching a new pipe to an existing pipe. A pipe extension requires the selection of a specific material. If possible, the selected material should match the existing pipe material. When metal pipe is selected, the base metal and coating specified shall match the existing pipe. However, the material thickness and

coating combination or material-strength classification must satisfy the cover and service-life-criteria requirements.

201-1.08 Draintile Structure [Added Mar. 2013]

If it is known that the proposed construction will require the removal of existing field tile, the drainage will be perpetuated in the following manner.

1. Tile Replacement Within Temporary Right of Way. Type 4 pipe is used to perpetuate the drainage. The pipe size will match the existing tile and must be perforated in accordance with the INDOT *Standard Specifications*.

2. Tile Outlet in Ditch Prior to Crossing Mainline Pavement. Type 4 non-perforated pipe and a 10-ft long segment of draintile terminal section are required between the right-of-way line and the proposed outlet. If necessary, a concrete collar is used to connect to the existing pipe at the right-of-way line, and a rodent screen is required at the terminal-section outlet. Revetment riprap or other gradation [as required to satisfy the clear-zone criteria (see Chapter 49)] is required between the tile outlet and the ditch flow line to prevent erosion.

3. Tile Outlet in Ditch After Crossing Mainline Pavement. Type 1 pipe is required between the right-of-way line and the proposed outlet. The concrete collar, rodent screen, and riprap requirements described in Item 2 above will apply to the type 1 pipe installation. The acceptable type 1 pipe materials must satisfy the cover and service-life criteria. The site is assumed to be non-abrasive and the map pH can be assigned to the structure.

4. Tile Outlet in Storm Drain System. Type 2 pipe is required between the right-of-way line and the outlet location. A concrete collar is required. The acceptable type 2 pipe materials must satisfy the cover and service-life criteria. The site is assumed to be non-abrasive, and the structure pH must match the value for the storm-drain structure that serves as the tile outlet.

5. Tile is Perpetuated Across Right of Way. Type 1 pipe is required from right-of-way line to right-of-way line. A concrete collar is required. The acceptable type 1 pipe materials must satisfy the cover and service-life criteria. The site is assumed to be non-abrasive, and the pH map value for the project location is assigned to the structure.

201-1.09 References

201-1.09(01) Uncited References

The designer should be familiar with the following references that pertain to drainage design. More-specific references will be provided in Part 2's respective chapters.

1. AASHTO *Model Drainage Manual*, Chapter 2, American Association of State Highway and Transportation Officials, Washington, DC.

2. AASHTO *Highway Drainage Guidelines*, American Association of State Highway and Transportation Officials, Washington, DC.

3. Indiana Administrative Code, Indiana General Assembly – Indiana Register. Appears on http://www.in.gov/legislative/iac/iac_title?iact=105.

4. *Code of Federal Regulations*.

5. *Stormwater Drainage Manual.* Burke, Christopher B., and Thomas T. Burke, West Lafayette, IN, Purdue Research Foundation, 2008.

6. Indiana Department of Natural Resources statutes and Indiana Code rules.

201-1.09(02) Cited References

1. *ASCE Hydrology Handbook*, Manuals and Reports on Engineering Practice, No. 28, American Society of Civil Engineers, 1949.

2. *ASCE Nomenclature for Hydraulics*. Manuals and Reports on Engineering Practice, No. 43, American Society of Civil Engineers, 1962.

3. *Chemical Quality of Water and Sedimentation in the Moreau River Drainage Basin, South Dakota*, Colby, B. R., Hembree, C. H., and Jochens, E. R. U.S. Geol. Survey Circ. 270, 1953.

4. *Federal Glossary of Selected Terms: Subsurface-Water Flow and Solute Transport*, USGS Groundwater Subcommittee of the Federal Interagency Advisory Committee on Water Data. U.S. Geological Survey, Office of Water-Data Coordination, 1989.

5. *General Introduction and Hydrologic Definitions. Manual of Hydrology: Part 1. General Surface-Water Techniques*, Langbein, W. B., and Iseri, K. T. U.S. Geological Survey Water-Supply Paper 1541-A, 1960.

6. *Guide for Collection, Analysis and Use of Urban Stormwater Data*, Alley, W. M., ed. Conference Report presented Nov. 28 – Dec. 3, 1976, at Easton, Maryland. Cosponsored by the Urban Water Resources Research Council, American Society of Civil Engineers, 1976.

7. *Guidelines for Determining Flood Flow Frequency, Bulletin 17B*, Hydrology Subcommittee of the Federal Interagency Advisory Committee on Water Data. U.S. Geological Survey, Office of Water Data Coordination, 1982.

8. *Guidelines on Community Local Flood Warning and Response Systems*, Hydrology Subcommittee of the Federal Interagency Advisory Committee on Water Data. U.S. Geological Survey, Office of Water Data Coordination, 1985.

9. *Stream-Gaging Procedure, a Manual Describing Methods and Practices of the Geological Survey*, Corbett, D. M., et al. U.S. Geological Survey Water-Supply Paper 888, 1943.

10. *USGS National Engineering Handbook*, Section 4 Hydrology, Chapter 22, Glossary. U.S. Geological Survey, Office of Water-Data Coordination, 1956, reprinted with minor revisions, 1971.

11. *WRD Data Reports Preparation Guide*, 1985 Edition, Novak, C. E. U.S. Geological Survey, 1985.

201-2.0 DEFINITIONS

A parenthetical number which follows a definition corresponds to the number of the cited reference shown in Section 201-1.09(02).

Abutment. The superstructure support at either end of a bridge or similar type structure, usually classified as spillthrough or vertical. Considered part of the bridge substructure. See Spillthrough Abutment and Vertical Abutment.

Aggradation. 1. General and progressive upbuilding of the longitudinal profile of a channel, or within a drainage facility due to the deposition of sediment. Compare with Sedimentation. 2.

Permanent or continuous aggradation is an indicator that a change in the stream's discharge and sediment load characteristics is taking place.

Allowable-Headwater, AHW, Depth. The depth or elevation of the flow impoundment for a drainage facility above which damage, some other unfavorable result, or a significant flood hazard can occur. Compare with Headwater Depth.

Alluvial. Deposits of silts, sands, gravels, or similar detrital material that has been transported by running water.

Analysis, Hydraulic. An evaluation of a drainage-related circumstance or condition based on measured or computed findings coupled with prudent judgment. Compare with Assessment, Hydraulic.

Analysis, Economic. See Economic Analysis. Compare with Economic Assessment.

Approach Section. A cross section of the stream channel, normal to thread of current and for the discharge of interest, located in the approach channel. See Approach Channel.

Apron. 1. Protective material laid on a streambed to prevent scour commonly caused by a drainage facility. More specifically, a floor lining of concrete, timber, or riprap, to protect a surface from erosion, such as the pavement below a chute, spillway, at the toe of a dam, or at the outlet of a culvert. 2. Material placed on the banks is commonly termed a blanket. Compare with Channel Lining and Blanket.

Armor. Artificial surfacing of a channel bed, bank, or embankment slope to resist streambed scour or lateral-bank erosion. Compare with Apron, Blanket, Channel Lining, and Revetment.

Articulated-Concrete Mattress. Rigid concrete slabs that can move without separating as scour occurs, usually hinged together with corrosion-resistant fasteners. Primarily used for a lower-bank-protection armor blanket.

Backfill. The material used to refill a ditch or other excavation, placed adjacent to or around a drainage structure, or the process of doing so.

Backwater. The increase in water-surface elevation induced upstream from a bridge, culvert, dike, dam, another stream at a higher stage, or other similar structure or condition that obstructs or constricts a channel relative to the elevation occurring under natural channel and floodplain conditions. Otherwise, water backed up or retarded in its course as compared with its normal or

natural conditions of flow. Also applies to the water-surface profile in a channel or conduit. See Backwater Curve.

The difference between the observed stage and that indicated by the stage-discharge relation is reported as backwater (8).

Other definitions and examples are as follows:

1. a flow retarding influence due to a dam, other constriction such as a bridge or culvert, or another stream;

2. the increase in water-surface elevation due to a bridge constriction above the normal unconstricted elevation at an approach section located one bridge length upstream from the bridge constriction;

3. water backed up or retarded in its course as compared with its normal or natural condition of flow; or

4. in stream gaging, a rise in stage produced by a temporary obstruction such as ice or weeds, or by the flooding of the stream below the backwater area. The low-lying lands adjacent to a stream that can become flooded due to backwater effects. Compare with Floodplain.

Backwater Flooding. The backup of water into a stream from a river or lake having a higher water elevation (6).

Baffle. 1. A structure constructed on the bed of a stream or drainage facility to deflect or disturb the flow. 2. Vanes or guides, a grid, grating, or similar device placed in a conduit to check eddy currents below them, and effect a more uniform distribution of velocities. 3. A device used in a culvert or similar structure to facilitate fish passage.

Bank. 1. The side slopes or margins of a channel between which the stream or river is normally confined. More formally, the lateral boundaries of a channel or stream, as indicated by a scarp, or on the inside of bends, by the streamward edge of permanent vegetal growth. 2. The margins of a channel. Banks are identified as right or left as viewed facing downstream (8). See Upper Bank, Lower Bank, Left Channel Bank, and Right Channel Bank.

Bankfull Discharge. 1. Discharge that, on average, fills a channel to the point of overflowing. Commonly considered as the mean annual discharge, $Q_{2.33}$, or two- to three-year discharge, Q_2,

Q_3, in a channel that has been relatively stable for a number of years without the occurrence of a large, bank-destroying flood. 2. The discharge at which maximum sediment transport occurs.

Bankfull Stage. 1. Stage at which a stream first overflows its natural banks. Compare with Flood Stage. Bankfull stage is a hydraulic term, whereas flood stage implies damage (8). 2. The water elevation that reaches the top of the banks along a stream (6).

Barrel Width. The inside, horizontal extent of a drainage facility.

Basin, Detention. 1. A basin or reservoir incorporated into the watershed whereby runoff is temporarily stored, thus attenuating the peak of the runoff hydrograph. 2. A stormwater management facility that temporarily impounds runoff and discharges it through a hydraulic outlet control structure.

Basin, Infiltration. A basin or reservoir wherein water is stored for regulating a flood. It does not have an controlled outlet. The stored water is disposed by such means as infiltration, injection or dry wells, or by release to the downstream drainage system after the storm event. The release can be through a gate-controlled gravity system or by means of pumping.

Basin, Sedimentation. A basin or tank in which floodwater or stormwater containing settleable solids is retained to remove by means of gravity or filtration a part of the suspended matter.

Bed-Load Discharge. The quantity of bed load passing a cross section of a stream in a unit of time.

Berm. 1. A narrow shelf or ledge, also a form of dike, such as the space left between the upper edge of a cut and the toe of an embankment, or a horizontal strip or shelf built into an embankment to break the continuity of an otherwise long slope. 2. The top surface or plane of a shoulder, ledge, or bank constructed in connection with the roadway embankment at a bridge abutment, waste along a fill slope, or a canal or ditch bank.

Bridge, Relief. An opening through an embankment located on a floodplain for the purpose of permitting passage of overbank flow.

Carryover. See Flow, Bypass.

Catch Basin. A structure, sometimes with a sump, for inletting drainage from a gutter or median and discharging the water through a conduit. In common usage it is a grated inlet, curb opening, or combination inlet with or without a sump. A sump in a catch basin can cause environmental

hazards by further polluting first-flush runoff and subsequent runoff passing through the catch basin.

Causeway. Rock or earth embankment carrying a roadway across water.

Check Dam. 1. A relatively low dam or weir across a channel for the diversion of irrigation flows from a small channel, canal, ditch, or lateral. 2. A low structure, dam, or weir, across a channel for the control of water stage or velocity, or the control of channel bank erosion and channel-bed scour from headcutting.

Check Dam, Modified. A modified check dam that is a runoff control structure, consisting of geotextile fabric, revetment riprap and a filter course of # 5 or 8 stone aggregate, placed across drainage channels to slow and filter storm water runoff.

Check Dam, Revetment. A check dam that is a runoff control structure, consisting of geotextile fabric and revetment riprap, placed across drainage channels to slow storm water runoff.

Check Dam, Traversable. A check dam that is a runoff control structure, consisting of soft material such as straw bales, fiber, rolls, or filter socks anchored in place across a drainage channel to slow and filter storm water runoff in areas where safety concerns or special site conditions exist.

Chemical Stabilization. Channel-bank protection technique involving the application of chemical substances to increase particle cohesiveness and to shift the size distribution toward the coarser fraction. The net effect is to improve the erosion resistance of the material.

Code of Federal Regulations, CFR. Federal regulations that are codified and published at least annually, and currently in force. The CFR is kept current through individual issues of the Federal Register. The two publications should be used together to determine the latest version of a given rule.

Confluence. The junction of two or more streams.

Construction in a Floodway, CIF, Permit. A permit required from IDNR for such construction if the drainage area is 50 sq mi or greater in a rural area, or 1 sq mi or greater in an urban area.

Continuity Equation. Discharge equals velocity times cross section area, $Q = VA$. For steady flow there is a continuity of discharge through succeeding sections of channel, expressed as: $Q = A_1V_1 = A_2V_2 = A_nV_n$ = a constant.

Contracted Section. A cross section at the narrowing of the natural channel, typically near a bridge or culvert.

Conveyance. 1. A measure of the ability of a stream, channel, or conduit to convey water. 2. A comparative measure of the water-carrying capacity of a channel; that portion of the Manning discharge formula that accounts for the physical elements of the channel. 3. A measure of the water-transporting capacity of a channel, floodplain, drainage facility, storm drain, or other natural or artificial watercourse feature traversed by flow such as runoff or irrigation water. For the design storm(s), conveyance can include that associated with overtopping flow and flood plain relief at a cross-drainage structure.

Cost-Effective. 1. A measure of a drainage-design strategy's acceptability is based on a judgment where either expected first costs or, where appropriate, the economic analysis costs are weighed against the selected design criteria. 2. The relationship between the benefits derived from a system and the cost of purchasing, operating, and maintaining it (6).

Countermeasure. A measure, either incorporated into the design of a drainage facility or installed separately at or near the facility that serves to prevent, minimize, or control hydraulic problems.

Cover. The vertical extent of soil above the crown of a pipe or culvert to the bottom of the pavement.

Critical Depth. Where the energy head is a minimum and the velocity head equals one-half the mean depth, the corresponding depth is Belanger's critical depth (3). The depth at which the specific energy, equal to depth plus velocity head, for a particular discharge is a minimum. It is the depth at which, for a given energy content of the water in a channel, maximum discharge occurs or the depth at which, in a given channel, a given quantity of water flows with minimum content of energy.

Cutoff Wall. A wall, usually constructed of sheet piling or concrete, that extends from the end of a drainage structure or flow line downward to prevent structure undermining.

D_{50}. Median size of riprap or granular material. The particle diameter at the 50-percentile point on a size-versus-weight-distribution curve such that half of the particles, by weight, are larger and half are smaller.

Deposition. The settling of material from the stream flow onto the bed.

Depth, Normal. 1. The depth of water in an open conduit that corresponds to uniform velocity for the given flow. It is a hypothetical depth under conditions of steady non-uniform flow. 2. The depth for which the water surface and bed are parallel. Normal depth and velocity apply only to uniform flow with a free water surface.

Depth, Outlet. The depth of water in an open conduit at the downstream end.

Design Criteria. Criteria, coupled with prudent judgmental factors, that are used to design a drainage facility.

Design Discharge. 1. The maximum rate of flow or discharge for which a drainage facility is designed, and thus expected to accommodate without exceeding the adopted design constraints. 2. The maximum flow that a bridge, culvert, or other drainage facility is expected to accommodate without contravention of the adopted design criteria. 3. The peak discharge, volume, stage, or wave-crest elevation, and its associated probability of exceedence selected for the design of a roadway culvert or bridge over a channel, floodplain, or along a shoreline. See Exceedance Probability.

Dike. An impermeable linear structure for the containment or control of overbank flow. It trends parallel with a river bank and differs from a levee only in that a dike extends for a much shorter distance along the bank.

Dike, Spur. An outdated term for a guide bank.

Discharge. Volume of water passing a point during a given time.

Diversion Interceptor. A storm water control structure consisting of a temporary ridge, excavated channel, or combination of a channel and supporting ridge constructed on a predetermined grade across a slope to collect storm water runoff and divert it to a treatment device or stable outlet.

Drainage Area. The catchment area for rainfall or other forms of precipitation that is delineated as the drainage area producing runoff, i.e., contributing drainage area. Also known as drainage basin or watershed.

Drainage Divide. 1. The rim of a drainage basin. 2. The divide separating one drainage basin from another.

Drain, Storm. A conduit for carrying off stormwater.

Drawdown. The difference in elevation between the water-surface elevation at a constriction in a stream or conduit and the elevation that exists if the constriction were absent. Drawdown also occurs at a change from a mild to a steep channel slope or at a weir or vertical spillway.

Economic Analysis. A probabilistically-based analysis that compares the estimated construction costs with the expected average flood-related operational costs and risks that can be quantified for the anticipated service life of a project to identify an optimum design flood frequency.

Economic Assessment. A less rigorous, more judgmental economic analysis.

Eminent Domain. In law, the right of a government to take or to authorize the taking of private property for public use, just compensation being given to the owner.

Encroachment. Construction within the limits of a floodplain. A longitudinal encroachment roughly parallels a channel or floodplain. A transverse encroachment crosses a channel or floodplain.

End Section. A structure, commonly made of concrete or metal, that is attached to the end of a culvert for retaining the embankment from spilling into the waterway, improving the appearance, providing anchorage, improving the discharge coefficient, or limiting some scour at the outlet.

Energy Dissipation. The phenomenon whereby energy is dissipated or used up. In highway drainage, this is the energy in flowing water.

Energy Grade Line. 1. A line joining the elevation of energy heads of a stream. 2. A line drawn above the hydraulic grade line a distance equivalent to the velocity head of the flowing water at each cross section along a stream or channel reach or through a conduit. 3. An inclined line representing the total energy of a stream flowing from a higher to a lower elevation. 4. An energy gradient. 5. The slope of the energy line with reference to a plane or, more simply, the slope of the energy grade line. 6. The slope of this line represents the rate of loss of head, and it should always slope downward in the direction of flow. Compare with Hydraulic Gradient and Friction Slope.

Entrance Head. 1. The head required to cause flow into a conduit or other structure. It includes both entrance loss and velocity head. Equivalent to headwater height. 2. Energy head at approach section to culvert or bridge.

Entrance Loss. The head lost in an eddy and friction at the inlet to a conduit or structure, expressed as a coefficient, K_e.

Equalizer. An opening, such as a culvert or bridge, placed where it is desirable to equalize the water level on both sides of an embankment.

Equivalent Diameter. The diameter of a circular pipe that has the same area as a known deformed pipe.

Erosion. 1. Displacement of soil particles on the land surface due to water or wind action. 2. The wearing away or eroding of material on the land surface or along channel banks by flowing water or wave action on a shore.

Exceedance Probability (EP). Probability that a random event will exceed a specified magnitude in a given time period, usually one year unless otherwise indicated (7).

Field Data. All stormwater data collected in the field regardless of whether or not it was analyzed in the field (1).

Fill Slope. Side or end slope of an earth-fill embankment. Where a fill slope forms the streamward face of a spillthrough abutment, it is regarded as part of the abutment.

Filter. 1. A layer of synthetic fabric, sand, gravel, or graded rock placed, or developed naturally where suitable in-place materials exist, between the bank revetment and soil, to prevent the soil from moving through the revetment by means of piping, extrusion, or erosion (exfiltrating); to prevent the revetment from sinking into the soil; or to permit natural seepage from the stream bank, thus preventing buildup of excessive hydrostatic pressure. 2. A device or structure for removing solid or colloidal material from stormwater and floodwater or preventing the migration of fine-grained soil particles as water passes through soil, that is, water is passed through a filtering medium, usually a granular material or finely woven or non-woven geotextile. Depending on context, can be used to remove material other than soils from a substance.

Flood. An event that overflows the normal flow banks or runoff that has escaped from a channel or other surface waters. In technical usage, it refers to a given discharge based, typically, on a statistical analysis of an annual series of events.

Floodplain. 1. A plain that borders a stream and is covered by its waters in time of flood. Topographic area adjoining a channel that is covered by flood flows and those areas where the path of the next flood flow is unpredictable, such as a debris cone, alluvial fan, or braided channel. 2. A nearly flat, alluvial lowland bordering a stream and formed due to stream processes, that is subject to inundation by floods.

Flow, Bypass. Flow that bypasses an inlet on grade and is carried in the street or channel to the next inlet downstream. Also termed carryover.

Flow Distribution. The estimated or measured spatial distribution of the total streamflow from the landward edge of one floodplain or stream bank to the landward edge of the other floodplain or stream bank.

Flow, Gradually-Varied. Flow in which changes in depth and velocity take place slowly over large distances, resistance to flow dominates, and acceleration forces are neglected.

Flowline. 1. The line or path, such as a rill, connecting the lowest flow points along the bed of a channel. The line does not include local depressions. 2. The path that very low flow follows in proceeding down a stream, river, swale, or channel. 3. The line extending along a channel profile that follows the lowest elevation of the bed. Also known as thalweg.

Fluvial Geomorphology. A study of the structure and formation of the earth's features that result from the forces of water. Sometimes incorrectly identified in discussions to morphology.

Freeboard, Channel. The difference between the water surface elevation and the top of bank in a channel.

Freeboard, Serviceability. The difference between the headwater elevation and the edge of pavement on a roadway.

Freeboard, Structural. Vertical clearance between the Q_{100} elevation and the lowest structural member of a bridge superstructure, the culvert soffit.

Free-Water Surface. The water surface of flow in an open channel or in a closed conduit not flowing full.

Friction Loss, or Head. The head or energy loss as the result of disturbances set up due to the contact between a moving stream of water and its containing conduit.

Froude number, F_r. 1. A dimensionless number that represents the ratio of inertial to gravitational forces, i.e., at a Froude number of 1 the flow velocity and wave celerity are equal. A high Froude number can be indicative of a high velocity associated with supercritical flow and thus the potential for scour and high momentum forces. 2. A number that varies in magnitude inversely with the relative influence of gravity on the flow pattern. $F_r > 1$ indicates rapid, or supercritical, flow. $F_r < 1$ indicates tranquil, or subcritical, flow.

Gabion. A rectangular basket made of steel wire fabric or mesh that is filled with rock or similar material of suitable size and gradation. It is used to construct a flow-control structure, bank protection, groin, jetty, permeable dike, or riparian spur dike. If filled with cobbles, masonry remnants, or other rock of suitable size and gradation, the gabion becomes a flexible and permeable block with which the foregoing structures and devices can be built.

Gage, or Gauge. 1. A staff graduated to indicate the elevation of a water surface. 2. A device for registering water level, flow, velocity, or pressure.

Gaging Station. A particular site on a stream, canal, lake, or reservoir where systematic observations of gage height or discharge are obtained (9). Used synonymously with gage (8).

Geotextile. Fabric material that is used under the placement of riprap for soil stabilization.

Groundwater. 1. Subsurface water occupying the saturation zone, from which wells and springs are fed. 2. A source of base flow in a stream. The term applies only to water below the water table.

Grout. A fluid mixture of cement and water, or of cement, sand, and water used to fill joints and voids.

Guide Bank. Formerly termed spur dike. Relatively short embankment in the shape of a quarter of an ellipse and constructed at the upstream side, or sometimes the downstream side, of either or both bridge ends as an extension of the abutment spillslope. The purpose is to align the flow with the bridge opening so as to decrease scour at the bridge abutment by spreading the flow and resultant scour throughout the bridge opening.

Gutter. That portion of the roadway section adjacent to the curb that is utilized to convey stormwater runoff.

Head. 1. The height of water above a point, plane, or datum of reference. Used also in computations as energy head, entrance head, friction head, static head, pressure head, lost head, etc. 2. The height of the free surface of a body of water above a given point.

Headcut. 1. Channel degradation associated with abrupt changes in the bed elevation, or headcut, that migrates in an upstream direction. 2. Channel-bed erosion moving upstream through a basin indicating that a readjustment of the basin's profile slope, channel discharge, and sediment load characteristics is taking place.

Headwall. The structural appurtenance usually applied to the end of a culvert inlet and outlet or stormdrain outlet to retain an adjacent highway embankment and protect the culvert ends or storm-drain outlet and highway embankment or storm-drain outfall from bank erosion or channel-bed scour.

Headwater Depth. 1. Depth of water above the inlet flow line at the entrance of a culvert or similar structure. 2. Natural flow depth plus backwater caused by a drainage structure. 3. The depth of water impounded upstream of a culvert, bridge, or similar contracting structure due to the influence of the structures constriction, friction and configuration.

High-Water Elevation. The water surface elevation that results from the passage of flow. It may be an observed high-water-mark elevation as a result of someone actually viewing and recording a runoff event or a calculated high-water elevation as part of a design process.

High-Water Mark. A mark left as evidence of the height to which a flood reached, usually in the form of deposited sediment, debris, or detritus.

Historical Flood. 1. A past flood event of known or estimated magnitude. 2. A known flood event predating systematic flow measurements at a given site.

Hydraulic Grade Line. 1. In a closed conduit, a line joining the elevation to which water can stand in risers. In an open conduit, the hydraulic grade line is the water surface. 2. In open-channel flow, it is the water surface.

Hydraulic Jump. The sudden and usually turbulent passage of water from a stage below critical depth, or supercritical flow, to a stage above critical depth, or subcritical flow, during which the velocity passes from supercritical to subcritical.

Hydraulic Radius. The cross section area of a stream divided by its wetted perimeter.

Hydrograph. By definition, a hydrograph is a plot of the variation of discharge with respect to time. It can also be the variation of stage or other water property with respect to time. Discharge is the volume of water flowing past a location per unit time, usually in cubic feet per second (cfs).

Hydrograph, Unit. The hydrograph of direct runoff from a storm uniformly distributed over the drainage basin during a specified unit of time. The hydrograph is reduced in vertical scale to correspond to a volume of runoff of 1 in. from the drainage basin (2).

Hydrologic Soil Group. A group of soils having the same runoff potential under similar storm and cover conditions (10).

Infiltration. The downward entry of water into the soil or rock (11).

Infiltration Rate. The rate at which water enters the soil under a given condition. The rate is expressed in inches per hour, feet per day, or cubic feet per second.

Inflow. The rate of discharge arriving at a point in a stream, structure, or reservoir.

Inlet. 1. A surface connection to a closed drain. 2. A structure at the diversion end of a conduit. 3. The upstream end of a structure through which water can flow. 4. An inlet structure for capturing concentrated surface flow.

Inlet Control. A condition in which the relation between headwater elevation and discharge is controlled by the upstream end of a structure through which water may flow. For example, a culvert on a steep slope and flowing partly full is operating under inlet control.

Inlet, Drop. Drainage structure with a vertical fall used as an energy dissipator.

Inlet Efficiency. The ratio of flow intercepted by an inlet to the total flow.

Inlet, Flanking. Inlets placed upstream and on either side of a storm-drain inlet that is located at the low point in a sag vertical curve.

Inlet, Improved. Flared, depressed, or tapered culvert inlet that decreases the amount of energy needed to pass the flow through the inlet and thus increase the capacity of a culvert with inlet control or supercritical flow. Improved inlets are generally used when there are potential problems due to backwater elevation and other factors such as road profile are fixed.

Inlet, Mitered. A flush-entrance culvert where the barrel is mitered to the slope of the embankment.

Inlet, Projecting. The culvert barrel projects beyond the plane of the slope or headwall, sometimes referred to as a re-entrant entrance.

Inlet, Square-Edged. An approximately 90-deg corner formed by the inside of the barrel and the upstream end of a culvert. Small chamfers ordinarily used in concrete construction are considered as producing a square-edged entrance, i.e., no hydraulic improvement.

Inlet, Tapered. A type of culvert design having an entrance face area larger than the main barrel.

Invert. The lowest point in a pipe or culvert.

Karst Topography. Irregular topography characterized by sinkholes, streamless valleys, or streams that disappear into the underground, all developed by the action of surface and underground water in soluble rock such as limestone.

Lag Time, TL. 1 The difference in time between the centroid of the excess rainfall producing runoff and the peak of the runoff hydrograph. Often estimated as 60% of the time of concentration, or TL = $0.6T_c$ (10).

Land Use. A term that relates to both the physical characteristics of the land surface and the human activities associated with the land surface (1).

Levee. 1. An embankment, generally landward of a top bank, that confines flow during high-water periods, thus preventing overflow into lowlands. 2. A linear embankment outside a channel for containment of flow (compare to Dike).

Manhole. A structure through which one can access a drainage system.

Mitigation. 1. The act of lessening, offsetting, or compensating an impact on surface waters. To moderate a qualifying or condition in force or intensity. 2. To decrease or rectify an adverse condition or action.

Navigable Waters. A regulatory term as it applies to highway-drainage planning, design and construction in jurisdictional surface waters, as waters of the United States including the territorial seas.

Normal Flow. 1. Flow at normal depth. 2. Average flow prevailing during the greater part of the year.

Open-Channel Flow. Flow in an open or closed conduit where the water surface is free, at atmospheric pressure.

Ordinary High Water. The Ordinary High Water Mark means that line on the shore of a waterbody established by the fluctuations of water and indicated by physical characteristics such as clear, natural line impressed on the bank, shelving, changes in the character of soil, natural destruction of terrestrial vegetation, the presence of litter and debris, or other appropriate means that consider the characteristics of the surrounding areas.

Outfall. The point where water flows from a conduit, the mouth or outlet of a drain or sewer, or drainage discharges from a channel or storm drain.

Outlet Control. A condition where the relation between headwater elevation and discharge is controlled by the conduit, outlet, or downstream conditions of a structure through which water can flow.

Peak Discharge. Maximum discharge rate on a runoff hydrograph for a given flood event.

Piping. The action of water passing through or under an embankment and carrying some of the finer material with it to the surface at the downstream face. Removal of soil material through subsurface flow or seepage water that develops channels or pipes within the soil bank.

Rainfall Intensity. Amount of rainfall occurring in a unit of time, converted to its equivalent in inches per hour at the same rate.

Reach. 1. A segment of stream or valley, selected with arbitrary bounds for purposes of study. 2. A comparatively short length of a stream or channel.

Receiving Stream. A natural body of water that one or more catchments enters into.

Regional Analysis. Flood-frequency-relationship line for a gaged watershed in a similar homogeneous physiographic area or region is used to develop a flood-frequency line for an ungaged watershed in that same region.

Regulatory Floodway. The floodplain area that is reserved in an open manner by Federal, State, or local requirements, i.e., unconfined or unobstructed either horizontally or vertically, to provide for the discharge of the base flood so that the cumulative increase in water surface elevation is not more than a designated amount.

Reservoir Routing. 1. Flood routing through a reservoir (10). 2. Flood routing of a hydrograph through a reservoir taking into account reservoir storage, spillway, and outlet-works discharge relationships.

Revetment. Rigid or flexible armor placed on a bank or embankment as protection against scour and lateral erosion.

Sand. 1. Soil material that can pass the No. 4 U.S. Standard Sieve and can be retained on the No. 200 sieve [FHWA, HIRE, 1987]. 2. Granular material that is smaller than 0.08 in. and coarser than 0.0024 in. [FHWA, HIRE, 1990].

Scour. 1. The displacement and removal of channel-bed material due to flowing water, usually considered as being localized as opposed to general bed degradation or headcutting. 2. The result of the erosive action of running water that excavates and carries away material from a channel bed.

Scour, Contraction. The response of a river or drainage facility such as bridge to the change in its bed load requirement as a result of a natural or constructed contraction of flow, i.e., the flow contraction is due to an encroachment of either the main channel or the floodplain by a natural constriction or the highway embankment.

Scour Depth. The vertical distance that a streambed is lowered by scour below the flowline elevation.

Scour, Pier. . 1. Scour in a channel or on a floodplain that is localized at a pier.

Sediment. Fragmental material that originates from weathering of rocks and is transported by, suspended in, or deposited by water or air, or is accumulated in a bed by other natural agencies (4).

Sediment Trap. A temporary sediment trap is a sediment control structure consisting of a small, temporary settling pool formed by constructing an embankment and/or excavated basin with an outlet control structure.

Sewer, Combined. A sewer that conveys stormwater and, at times, sanitary sewage.

Sheet Flow. See Flow, Overland.

Shoulder. The portion of the roadway contiguous with the traveled way for accommodating stopped vehicles, for emergency use, or for lateral support of the road's base and surface courses.

Side Slope. The slope of the sides of a embankment or bridge abutment, measured as a horizontal distance to vertical distance, i.e., 2:1.

Silt. 1. Material passing the No. 200 U.S. Standard Sieve that is nonplastic or very slightly plastic and exhibits little or no strength if air-dried. 2. According to the Unified Soil Classification System, material finer than 0.0025 in. and coarser than 0.00015 in.

Sinuosity. The ratio of the length of a river thalweg to the length of the valley proper.

Skew. The measure of the angle of intersection between a line normal to the roadway centerline and the direction of the flow in a channel at flood stage in the linear direction of the main channel.

Soffit. The inside top of a culvert.

Soil. Finely-divided material composed of disintegrated rock mixed with organic matter, as the loose surface material in which plants grow.

Soil-Cement. A designed mixture of soil and portland cement compacted at a proper water content to form a veneer or structure that can prevent the erosion of a channel bank, dam face, or inlet and outlet of a drainage structure.

Spillthrough Abutment. A bridge abutment having a fill slope on the channel side. The term originally referred to the spillthrough of fill at an open abutment but is now applied to each abutment having such a slope.

Spillway, Emergency. A rock or vegetated earth waterway around a dam, built with its crest above the normally used principal spillway. Used to assist or supplement the principal spillway in conveying extreme amounts of runoff safely past the dam so as to minimize damage and flood hazards (10).

Spillway, Principal. Conveys all ordinary discharges coming into a reservoir and the portion of an extreme discharge that does not pass through the emergency spillway or outlet works.

Spread. 1. The accumulated flow in and next to the roadway gutter. 2. The transverse encroachment of stormwater onto a street. This water often represents an interruption to traffic flow, splash-related problems, and a source of hydroplaning during a storm. 3. The lateral distance of roadway ponding extending out from the curb or edge of the traveled way.

Spread Footing. A pier or abutment footing that transfers load directly to the earth.

Stage. Height of water surface above a specified datum.

Stage-Discharge Curve. A graph showing the relation between the gage height, and the amount of water flowing in a channel, expressed as volume per unit of time (8).

Stage-Storage Curve. A graph showing the relation between the surface elevation of the water in a reservoir, plotted as ordinate, against the volume below that elevation, plotted as abscissa, or the amount of water flowing in a channel, expressed as volume per unit of time, plotted as abscissa. Compare with Stage-Discharge Curve and Rating Curve.

Stilling Basin. A device or structure placed at or near the outlet of a structure for the purpose of inducing energy dissipation where flow velocity is expected to cause unacceptable channel-bed scour and bank erosion.

Storage. Water detained in a drainage basin, such as groundwater, channel storage, or depression storage. The term drainage-basin storage or basin storage is used to refer collectively to the amount of water in storage in a drainage basin.

Stream. A general term for a body of flowing water.

Stream-Bank Erosion. Removal of soil particles or a mass of particles from a bank surface due primarily to water action. Other factors such as weathering, ice and debris abrasion, chemical reactions, and land-use changes can also directly or indirectly lead to stream-bank erosion.

Stream-Bank Protection. A technique used to prevent erosion or failure of a channel bank.

Stream, Braided. A stream whose surface is divided at normal stage with small middle bars or small islands.

Stream Gaging. The process and art of measuring the depth, area, velocity, and rate of flow in a natural or artificial channel (5).

Stream-Gaging Station. A gaging station where a record of discharge of a stream or river is obtained. This term is used only for a gaging station where a continuous record of discharge is obtained (8).

Stream, Intermittent. A stream that flows only at certain times of the year once it receives water from a spring or from a surface source such as melting snow in a mountainous area (8).

Stream Reach. A length of stream channel selected for use in hydraulic or other computations (10).

Submerged Inlet. An inlet of a culvert-like structure having a headwater greater than approximately 1.2D, where D is the culvert rise.

Submerged Outlet. A culvert-like outlet having a tailwater elevation greater than the soffit of the culvert.

Substructure. All of the structure below the bearings of simple or continuous spans, skewbacks of arches and tops of footings or rigid frames, together with the backwalls, wingwalls, and wing-protection railings.

Superelevation. 1. The increase in water-surface elevation at the outside of an open-channel bend. 2. A transverse tilting of the channel bed in a lined channel with predominately supercritical flow.

Superflood. A 0.2% Annual EP flood.

Surcharge. Increase in headwater elevation above existing conditions.

Swale. 1. A wide, shallow ditch usually grassed or paved and without well-defined bed and banks. 2. A slight depression in the ground surface where water collects and that can be transported as a stream. Often vegetated and shaped so as not to provide a visual signature of a bank.

Synthetic Mattress, Matting, or Tubing. A grout, or sand-filled, manufactured, semiflexible casing placed on a channel bank to prevent erosion.

Tailwater, TW. The depth of flow in a channel directly downstream of a drainage facility. Often calculated for the discharge flowing in the natural stream without the highway effect.

Time of Concentration, T_c. The time required for water to flow from the farthest point on the watershed to the measuring point.

Toe. The portion of a stream cross section where the lower bank terminates and the channel bottom or the opposite lower bank begins.

Tractive Force. The drag on a stream bank caused by passing water that tends to pull soil particles along with the streamflow.

Travel Time. The average time for water to flow through a reach or other stream or valley length that is less than the total stream or valley length. Travel time is part of T_c, but not all of it (10).

Tributary. A lesser branch of a watershed-stream system.

Two-Dimensional Water-Surface Profile. An estimated water-surface profile that recognizes flow only in the upstream-downstream and transverse direction. Vertical velocity vector components are ignored.

Vertical Abutment. An abutment, usually with wingwalls, that has no fill slope on its channel side. See Abutment. Compare with Spillthrough Abutment.

Watershed. See Drainage Area.

Water-Surface Elevation. A point on the water-surface profile at a specific location of interest.

Water-Surface Profile. A graph of water levels plotted against stream distance at a particular time or for a particular condition, such as for a flood peak or for a low-flow period.

Waterway-Opening Area. Area of bridge opening at or below a specified stage, measured perpendicular to principal direction of flow.

Wave Attack. Impact of waves on a channel bank or shore.

Wave Run-Up. Height to which water rises above still-water level where waves meet a beach, wall, embankment, or causeway.

Wetted Perimeter. The length of the wetted contact between a stream and its containing conduit, measured along a plane at right angles to the flow in question.

201-3.0 NOTATIONS

A	Area of pipe, ft^2
A	Algebraic difference in approach grades, %
A	Cross sectional area of the channel, ft^2
A_B	Amount of assessment to beneficiary
C	Rational Method Coefficient reflecting land use and soil type
C_F	Cost of drainage facility
CN	Curve Number
D	Maximum depth of flow in the channel for the design discharge, ft
D	Diameter of circular pipe, ft
d_{50}	Median particle or rock diameter
D_E	Equivalent diameter
d_{max}	Maximum particle or rock diameter

EP	Exceedance probability
F_r	Froude number
G	Longitudinal road profile grade, %
h_s	Dissipator pool depth, ft
I	Intensity, in./h
K	Flanking inlet spacing coefficient
K_e	Entrance Loss Coefficient
L	Length of the vertical curve, ft
L	Flow length, ft
L_B	Length of basin
L_s	Length of dissipating pool
n	Manning's roughness coefficient for sheet or channel flow
P_2	2-year, 24-h rainfall, in., from NOAA Atlas 14
P_w	Wetted Perimeter, ft
Q	Flow Rate, ft^3/s
Q_{OR}	Discharge from storm sewer draining from outside INDOT right of way
Q_T	Total discharge of drainage facility
R	Hydraulic Radius, ft
r	Hydraulic Radius, ft
s	Watercourse slope, ft/ft
S	Watercourse slope, ft/ft
S_x	Gutter cross slope, ft/ft
T	Riprap or revetment thickness
T	Water spread, ft
t_c	Time of Concentration, h or min
t_O	Overland flow time,
T_t	Total travel time, h or min
TW	Tailwater depth
V	Average velocity, ft/s
V_B	Basin exit velocity
W_o	Width of culvert opening
y_o	Outlet depth, also known as y_e
γ	Unit weight of water, 62.4 lb/ft^3
τ	Shear stress in channel at maximum depth, lb/ft^2
τ_p	Permissible shear stress, lb/ft^2

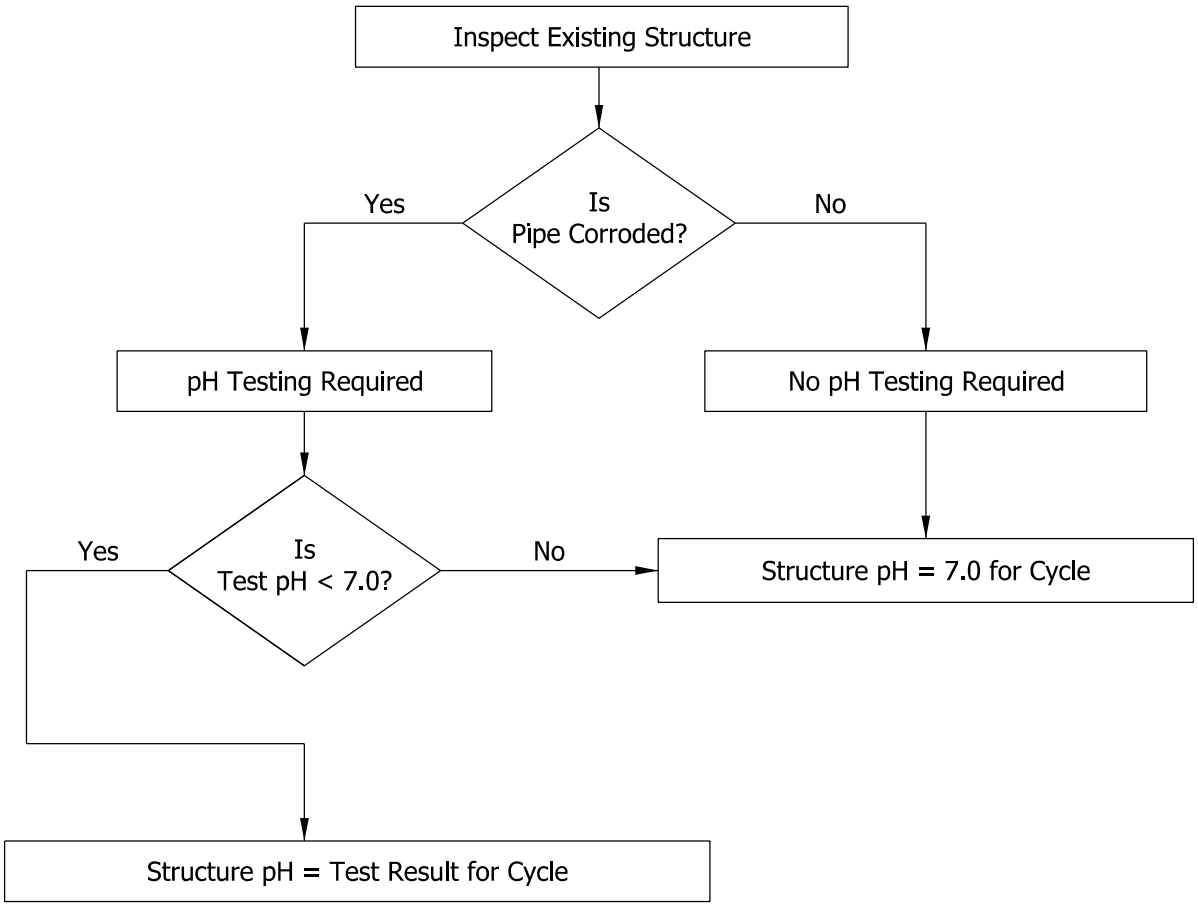

STRUCTURE pH DETERMINATION PROCEDURE
Proposed Mainline Culverts and Other Culverts in Natural Channels
Project in Area Where Map pH = 7.0

Figure 201-1A

Back

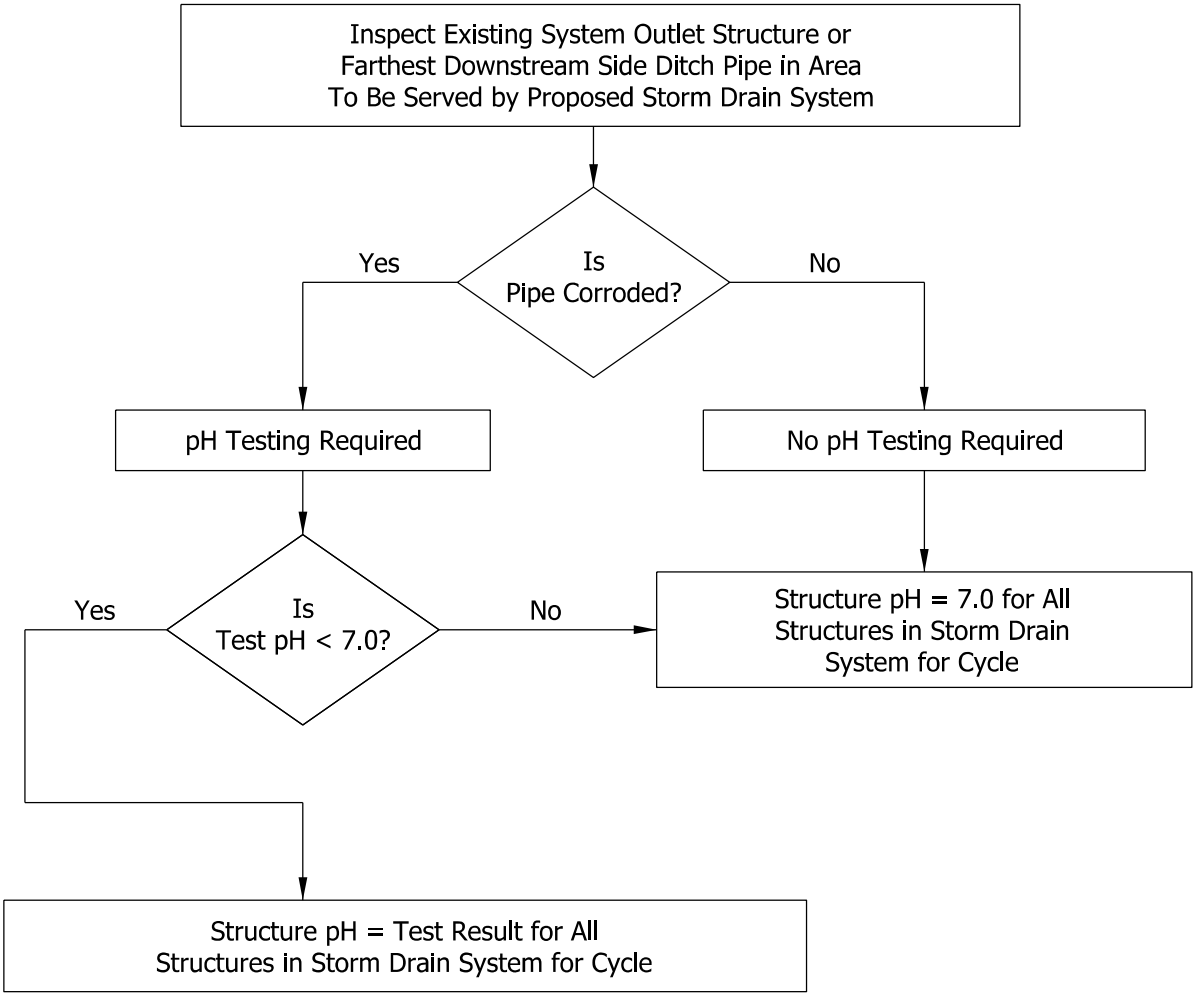

STRUCTURE pH DETERMINATION PROCEDURE
Proposed Storm Drain Structures
Project in Area Where Map pH = 7.0

Figure 201-1B

Back

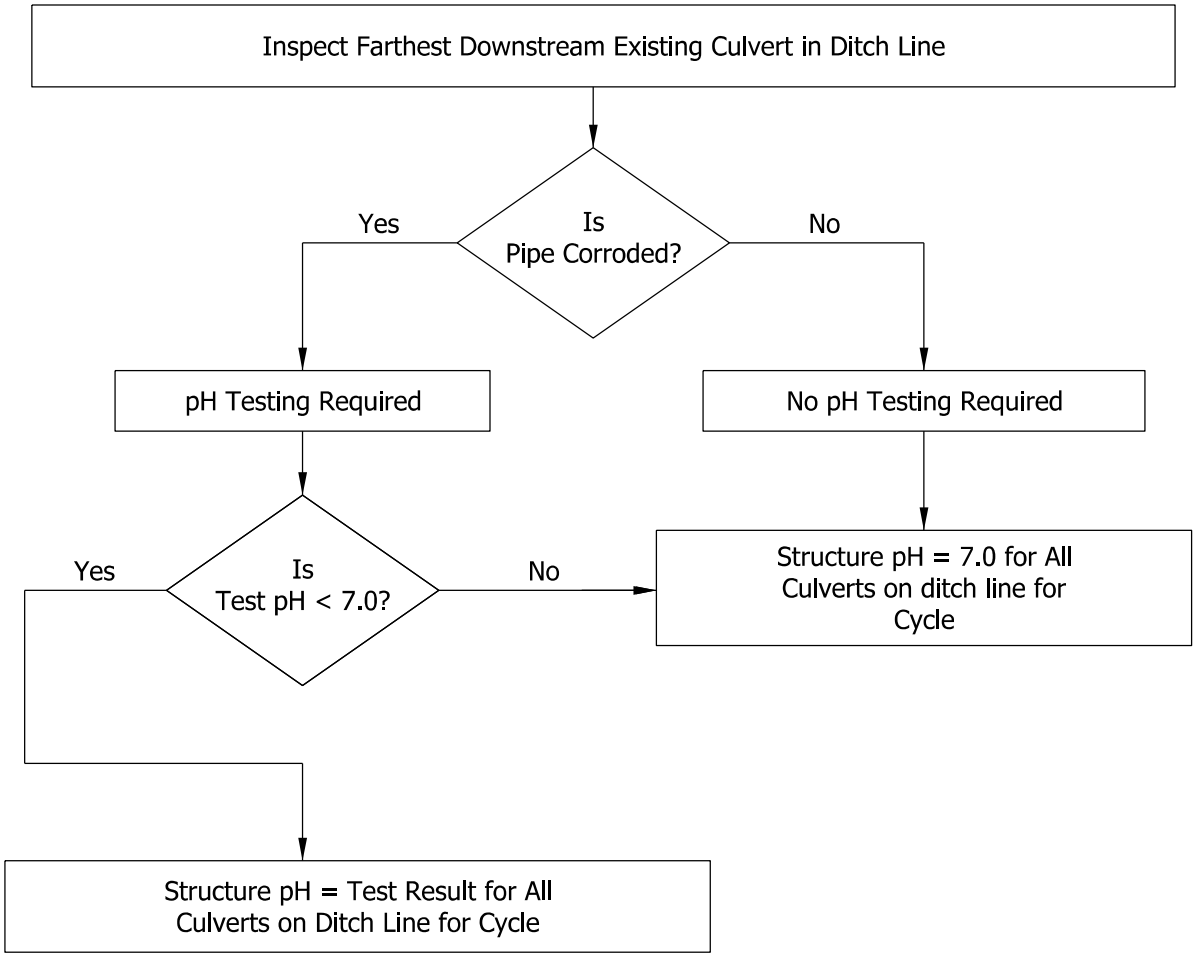

STRUCTURE pH DETERMINATION PROCEDURE
Proposed Side Ditch Culverts
Project in Area Where Map pH = 7.0

Figure 201-1C

Back

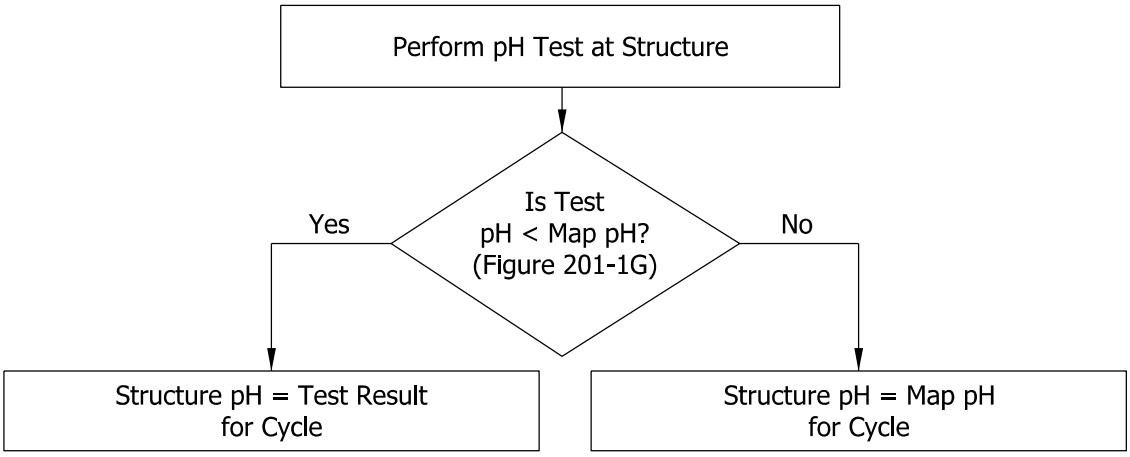

STRUCTURE pH DETERMINATION PROCEDURE
Proposed Mainline Culverts and Other Culverts in Natural Channels
Project in Area Where Map pH = 7.0

Figure 201-1D

Back

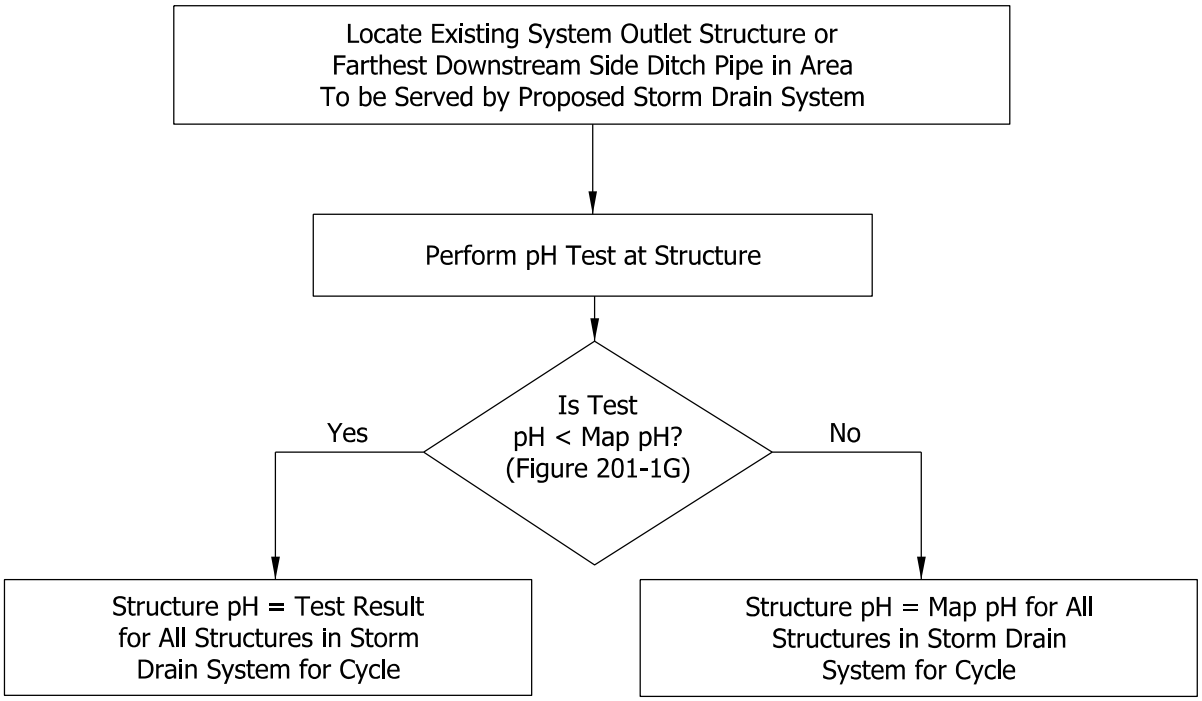

STRUCTURE pH DETERMINATION PROCEDURE
Proposed Storm Drain Structures
Project in Area Where Map pH = 7.0

Figure 201-1E

Back

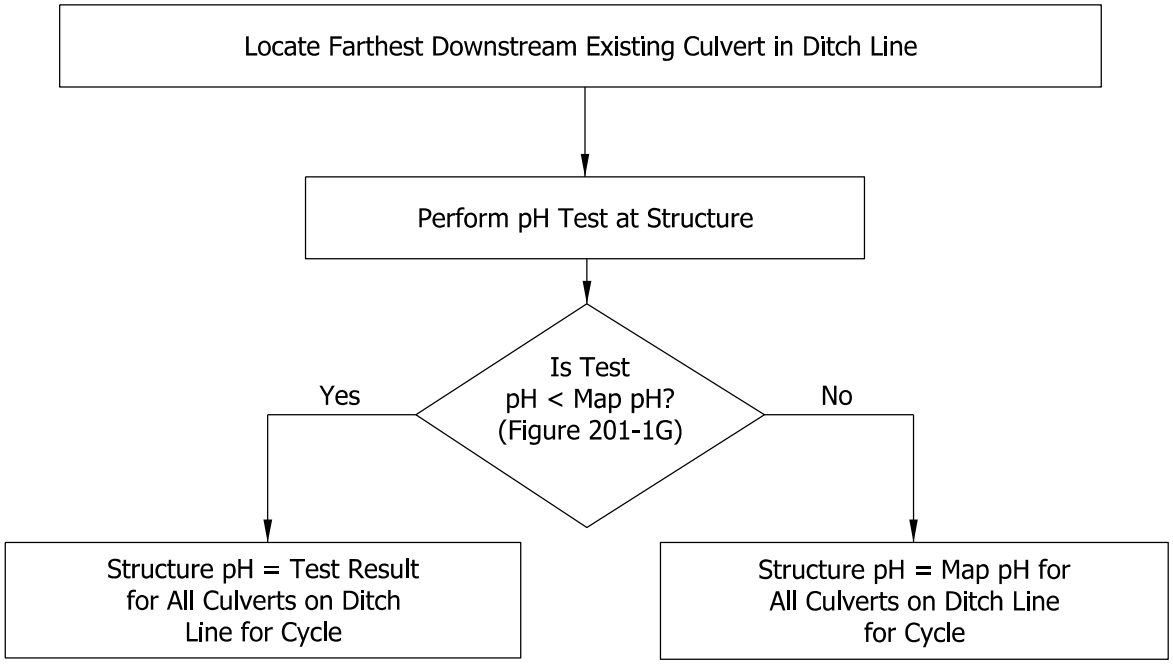

STRUCTURE pH DETERMINATION PROCEDURE
Proposed Side Ditch Culverts
Project in Area Where Map pH = 7.0

Figure 201-1F

Back

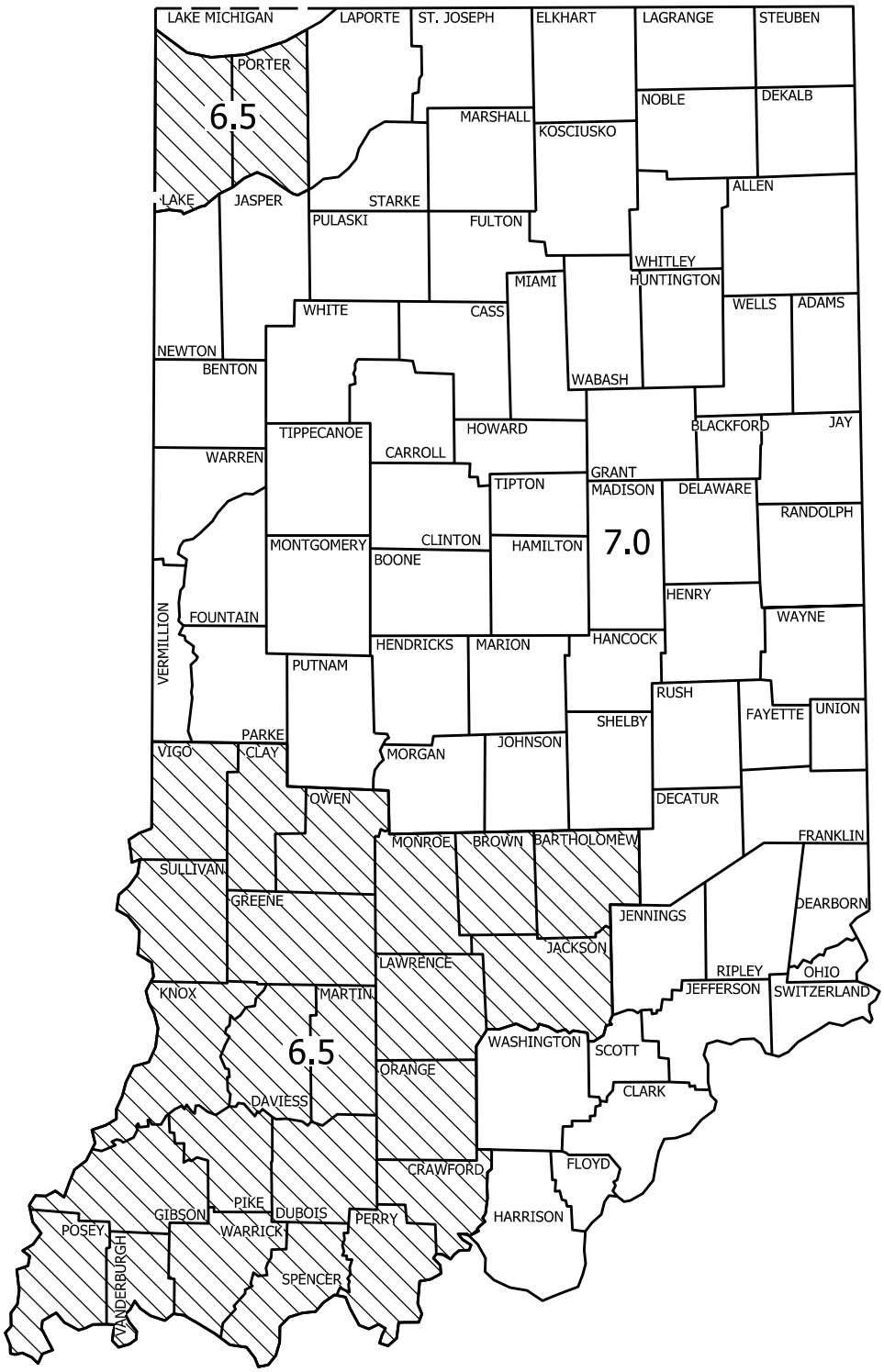

pH MAP

Figure 201-1G

Back

CHAPTER 202

Hydrology

Design Memorandum	Revision Date	Sections Affected
14-02	Feb. 2014	202-3.03, Figure 202-3B, Figure 202-3C

TABLE OF CONTENTS

LIST OF FIGURES 4

202-1.0 INTRODUCTION 5
- 202-1.01 Hydrology Definition 5
- 202-1.02 Exceedance Probability 5
- 202-1.03 Q Definition 5
- 202-1.04 Estimating Flow Rate 6

202-2.0 HYDROLOGIC-ANALYSIS PROCEDURES 6
- 202-2.01 Data Gathering and Preliminary Studies 6
- 202-2.02 Hydrologic Factors 6
- 202-2.03 Determining Drainage Area 7
- 202-2.04 Determination of Soil, Vegetation, and Land-Use Factors 8
- 202-2.05 Determination of Time of Concentration 8
  - 202-2.05(01) Sheet-Flow Method 9
  - 202-2.05(02) Shallow-Concentrated-Flow Method 9
  - 202-2.05(03) Open-Channel-Flow Method 10
  - 202-2.05(04) Lag Time 10
  - 202-2.05(05) Storage and Flood-Control Facility 10
  - 202-2.05(06) Storm-Drain-Flow Method 10
  - 202-2.05(07) Stormwater-Storage-Flow Method 12
- 202-2.06 Determination of Precipitation Rate 12
- 202-2.07 Determining Discharge 12

202-3.0 ACCEPTED METHODOLOGIES 13
- 202-3.01 Definition 13
- 202-3.02 Selection of Discharge-Computation Method 13
- 202-3.03 Q_{500} Determination for Scour Calculations [Added Feb. 2014] 14
- 202-3.04 Selection of Discharge for Pump Station 15
- 202-3.05 Selection of Methods Table 15

202-4.0 DOCUMENTATION FOR HYDROLOGY 15
- 202-4.01 Culvert or Bridge 16
  - 202-4.01(01) Narrative 16
  - 202-4.01(02) Drainage Area 16
  - 202-4.01(03) Rational or Unit Hydrograph Method 16
  - 202-4.01(04) Other Methods 17
- 202-4.02 Pavement or Storm Drainage 17
  - 202-4.02(01) Narrative 17
  - 202-4.02(02) Drainage Area 17

202-4.02(03) Hydrologic Computations 17
202-4.03 Stormwater Storage 18
202-4.03(01) Narrative 18
202-4.03(02) Drainage Area 18
202-4.03(03) Hydrologic Computations 18
202-5.0 REFERENCES 18
FIGURES 20

LIST OF FIGURES

Figure	Title
202-2A	Example of TR-55 Time of Concentration Worksheet
202-2B	Manning's Roughness Coefficient, n, for Sheet Flow
202-2C	Manning's Roughness Coefficient, n, for Channel Flow
202-2D	Average Velocities for Estimating Travel Time for Shallow Concentrated Flow
202-2E	Rational-Method Runoff Coefficient, C
202-2F	Curve-Number Table
202-3A	Selection of Discharge-Computation Method
202-3B	Example of Graphical Method for Determining the 0.2% EP [Added Feb. 2014]
202-3C	Regional Multipliers for Determination of 0.2% Annual EP [Added Feb. 2014]

CHAPTER 202

HYDROLOGY

202-1.0 INTRODUCTION

Highway drainage structures must be sized to convey a specific flow rate, *Q*, which satisfies some established standard. Determining structure size and type is generally one of the earliest activities undertaken in the design process. Various hydrologic methods can be used to estimate *Q*. Multiple methods of obtaining estimates can sometimes be used, and the engineer determines the best *Q* to use at that site. A specific method of determining *Q* can sometimes be prescribed.

202-1.01 Hydrology Definition

Hydrology is a broad science encompassing many disciplines relating to water. In highway engineering, hydrologic studies are primarily concerned with surface-water runoff and determining design *Q*. A hydrologic analysis is a prerequisite to identifying flood-hazard areas and determining the locations at which construction and maintenance will be unusually expensive or hazardous.

202-1.02 Exceedance Probability

Exceedance probability is a statistical term that states the probability of a specific value or event being equaled or exceeded. Established rainfall events for design purposes are described, such as 100-year storm, Q_{100}, 1% storm, return period, exceedance probability, etc. The INDOT preferred method of stating a standard rainfall event is as exceedance probability, EP. An established standard can be set as INDOT policy or it may be set by an outside authority such as a city, county surveyor for a legal drain, IDNR, State law, or other jurisdictional agency. Therefore, although the standard may not be originally stated in INDOT's preferred terms, it should be restated as EP.

202-1.03 Q Definition

Q is the common denotation of the total flow rate. It is dimensioned in cubic feet per second for INDOT design. Depending on the project, there can be different *Q*s of interest. For example, for sizing a bridge based on backwater criteria, the design *Q* is that for a 1% EP. However, for scour

analysis on a new bridge, the 1% EP and the 0.2% EP both should be evaluated. A storm drain, channel, ditch, local driveway, etc. each have a specific EP defined for design purposes.

202-1.04 Estimating Flow Rate

The importance of accurate estimates of *Q* cannot be overstated. An error committed in this part of the design can directly lead to an incorrectly-sized drainage structure. An oversized drainage structure implies that money can be wasted. An undersized structure increases the risk of potential flooding and maintenance issues. Existing-structure size should be considered in designing a replacement structure. Long term legal, financial, or operational impacts can be expected if undersized structures are consistently installed.

Most highway-drainage structures are constructed using taxpayer-supported funding. As such, an INDOT project should present the correct stewardship. The designer should utilize sound hydrologic methodology in the development of the design.

202-2.0 HYDROLOGIC-ANALYSIS PROCEDURES

The following is a discussion of policies and procedures which apply to hydrologic analysis. For more information, see the *AASHTO Highway Drainage Guidelines.*

202-2.01 Data Gathering and Preliminary Studies

The data to be gathered for a hydrologic study includes, but is not limited to, topographic maps, soil maps, aerial photographs, stream-flow records, historical high-water elevations, flood discharges, rainfall curves, or locations of hydraulic features such as reservoirs, water projects, or designated or regulatory floodplains, and contemporaneous interviews with affected property owners.

202-2.02 Hydrologic Factors

Hydrologic factors are site specific and should be evaluated by an engineer proficient in the practice of hydraulic and hydrologic engineering to understand their effect on the runoff from a watershed. Many factors may be subject to alteration over time and whether that potential needs to be addressed should also be evaluated. Some of these factors include the following.

1. Drainage-Basin Characteristics. These include size, shape, slope, land use, geology, soil type, surface infiltration and storage, and the maturity of the watershed's drainage system.

2. Stream-Channel Characteristics. These include geometry and configuration, natural and artificial controls, channel modifications, aggradations or degradations, ice, debris, and routine maintenance.

3. Floodplain Characteristics. A floodplain is defined as a strip of relatively smooth land bordering a stream and is flooded at a time of high water. Due to its continually changing nature, a floodplain or other flood-prone area should to be examined relative to how it can affect or be affected by development. Flooding is a natural and recurring event for a river or stream.

4. Meteorological Characteristics. These include observable weather events which are explained through the science of meteorology. Those events are bound by the variables that exist in the atmosphere: They include temperature, air pressure, water vapor, and the gradients and interactions of each variable, and how they change in time. INDOT's concerns are for intensity and duration of specific storm events. The site-specific data used for an INDOT hydrologic study appears in NOAA Atlas 14.

202-2.03 Determining Drainage Area

With the exception of a very large watershed, a drainage-area boundary should be delineated on a topographic map. The most readily-available topographic maps are USGS Quadrangle maps. Many counties have had more-detailed topographic surveying done that is mapped to 1- or 2-ft contours. The availability of topographic-survey mapping can be determined from the Indiana Geographic Information Council website or by contacting the county surveyor.

Initial area determination can be obtained using computer-based automatic delineation programs. Web-based and easily-accessed programs include USGS STREAMSTATS and HYMAPS-OWL. STREAMSTATS can be accessed at the USGS website. HYMAPS-OWL can be accessed at the Purdue Agricultural and Biological Engineering (ABE) website. The results of these programs should be examined to ensure accuracy, particularly where a railroad track or highway crosses the drainage path, as areas can erroneously be included or excluded which can alter runoff estimates significantly. Aerial photography can be helpful, but field inspection can be required to ensure accuracy. In an area with land improvements, the watershed boundaries can be altered and inconsistent with the determinations made on a topographic map. Adjustments should be made accordingly. Field inspections or consultation with city or county officials may be necessary to determine how the drainage pattern has been modified.

For a very large area it can be impractical to delineate the boundaries. Alternative methods may be used. One publication is *Drainage Areas of Indiana Streams*, which appears on the IDNR Division of Water website. It provides watershed determinations at various points on Indiana streams.

If there are bridges or other developments in the vicinity, other State or local agencies should be contacted as drainage studies may have already been performed that have area determinations that can be of use.

202-2.04 Determination of Soil, Vegetation, and Land-Use Factors

Soil types can be determined from mapping obtained on the NRCS website. These usually should be reclassified as Type A, B, C, or D for determination of the *C* factor for use in the Rational Formula (see Figure 202-2E), or determination of the CN factor for use in hydrographs (see Figure 202-2F). Vegetation and land-use can be determined through field inspection for a small area, and by using aerial photography which is available at various websites. The Purdue HYMAPS-OWL watershed delineation tool also generates a summary of soil types A, B, C, or D, and land use by acres for the watershed. If the watershed delineation has been verified as accurate, this data can then be used to calculate the *C* or CN for the watershed. If a detailed hydrograph is being modeled with numerous sub-areas, the soil, vegetation, and land-use characteristics should be properly determined for each sub-area instead of using an overall average for the total watershed.

202-2.05 Determination of Time of Concentration

The time of concentration, t_c, is the time required for water to flow from the hydraulically most-remote point of the drainage area to the point of concern. Time of concentration is an important variable in many hydrologic methods, including the Rational and Natural Resources Conservation Service, formerly SCS, procedures. For a similar size and type of watershed, the shorter the t_c, the larger the peak discharge.

Water moves through a watershed as a combination of sheet, shallow concentrated, and channelized flow. The type that occurs is a function of the conveyance system and is best determined through field inspection, but can be evaluated using topographic and aerial photographic mapping. TR-55 should be used as the method for determining time of concentration. See Figure 202-2A for the standard TR-55 Worksheet. The TR-55 method of determining time of concentration is applicable for both the Rational Equation and the NRCS, formerly SCS, Peak Flow, or other hydrograph method. In the Rational Equation, t_c is expressed in minutes. In the NRCS procedures, t_c is expressed in hours. If another method is to be used for

determining time of concentration, approval from the Office of Hydraulics manager is required.

202-2.05(01) Sheet-Flow Method

In designing a drainage system, the sheet-flow path is not necessarily perpendicular to the contours shown on available mapping. The land will often be graded, and swales will intercept the natural contour and conduct the water to the streets which reduces the time of concentration. Aerial photography is useful in determining obvious variations in the general flow path. Sheet flow should be limited to a maximum length of 100 ft per current TR-55 methodology. However, a smaller length should be used if flow begins to channelize sooner. The equation used for sheet flow is known as the Manning's Kinematic Solution, as follows:

$$t_O = \frac{0.007(nL)^{0.8}}{(P_2)^{0.5} S^{0.4}} \qquad \text{[Equation 202-2.1]}$$

Where:
- t_O = overland flow time, h
- n = Manning's roughness coefficient for sheet flow
- L = flow length, ft
- P_2 = 2-year, 24-h rainfall, in., from NOAA Atlas 14
- S = slope of hydraulic grade line, or watercourse slope, ft/ft

Sheet flow has its own set of Manning's roughness values which appear in Figure 202-2B. These values will typically be rougher than channel-flow roughness values for the same type of surface because the water flow is very shallow.

202-2.05(02) Shallow-Concentrated-Flow Method

Shallow concentrated flow occurs once sheet flow first begins to channelize. The Upland Method, NRCS 1972, can be used to determine velocity of shallow concentrated flow to estimate time of concentration of that portion. This method relates watershed slope and surface to flow velocity. TR-55 includes the relations for an unpaved area and paved area to determine the travel time for shallow concentrated flow as follows:

Unpaved $V = 16.393\, S^{0.5}$ [Equation 202-2.2]

Paved $V = 20.683\, S^{0.5}$ [Equation 202-2.3]

Where: V = average velocity, ft/s
S = slope of hydraulic gradient, or watercourse slope, ft/ft

This relationship is shown on the logarithmic chart for easier use (see Figure 202-2D). The length of the shallow concentrated flow can then be divided by the velocity to determine the amount of shallow-concentrated-flow time.

202-2.05(03) Open-Channel-Flow Method

An open channel is assumed to begin where the surveyed cross-section information has been obtained, where the channel is visible on an aerial photograph, or where a blue line indicating a stream appears on a United States Geological Survey (USGS) quadrangle sheet. Manning's equation, as follows, can be used to estimate average flow velocity. The velocity is determined for the bank-full elevation.

$$V = \frac{1.486}{n} R^{2/3} S^{1/2} \qquad \text{[Equation 202-2.4]}$$

The total time of concentration is the summation of sheet flow, shallow concentrated flow, and open-channel flow.

202-2.05(04) Lag Time

If HEC-HMS is used, lag time should be considered in the total time of concentration. Lag time will be considered as 0.6 times the total time of concentration.

202-2.05(05) Storage and Flood-Control Facility

Storage will not be considered in the total time of concentration unless the pond or reservoir is a government-regulated facility.

202-2.05(06) Storm-Drain-Flow Method

For a storm-drainage system, the time of concentration for an area consists of an inlet time plus the time of flow in a closed conduit or open channel to the design point.

1. Inlet Time. Inlet time is the sum of the time required for water to move across the pavement or overland back of the curb to the gutter using TR-55 methodology, plus the time required for flow to move through the length of gutter to the inlet. If the total time of concentration for pavement-drainage inlets is less than 5 min, a minimum of 5 min should be used to estimate the duration of rainfall. The travel time for gutter flow can be estimated using an average velocity of the flow. The following equation can be used to determine the velocity in a triangular gutter section given the watercourse slope, gutter cross slope, and water spread.

$$V = \frac{1.12}{n} S^{0.5} S_x^{0.67} T^{0.67} \qquad \text{[Equation 202-2.5]}$$

Where:
- V = flow velocity in gutter, ft/s
- n = Manning's roughness coefficient for sheet flow from Figure 202-2B
- S = longitudinal slope, ft/ft
- S_x = gutter cross slope, ft/ft
- T = water spread, ft

For a triangular channel with uniform inflow per length and zero flow at the upstream end, the average velocity will occur where the spread is 65% of the maximum. Each inlet should have its own independent time of concentration. Travel time between inlets is not considered.

2. Storm-Drain Time. For ordinary conditions, a storm drain should be sized assuming that it will flow full or almost full for the design discharge. For non-pressure flow, the velocity can be determined using Manning's equation. For a circular pipe flowing full, the equation becomes the following:

$$V = \frac{0.593}{n} D^{2/3} S^{1/2} \qquad \text{[Equation 202-2.6]}$$

Where:
- V = average velocity, ft/s
- D = diameter of circular pipe, ft
- S = longitudinal slope, ft/ft

Pipe flow charts can be used to determine the velocity for either full or partially-full flow conditions. If storm-drainage-system pipes will operate under pressure flow, the continuity equation should be used to determine velocity as follows:

$$V = Q/A \qquad \text{[Equation 202-2.7]}$$

Where: V = mean velocity of flow, ft/s
Q = discharge in pipe, ft^3/s
A = area of pipe, ft^2

The rational method should be used to determine discharge for a storm-drainage system. Other methods can be incorporated within the design process. However, approval from INDOT must be requested prior to submittal for initial review.

202-2.05(07) Stormwater-Storage-Flow Method

The TR-55 methodology should be used for determining time of concentration of watershed runoff to a storage facility. A unit hydrograph method, using a computer program such as TR-20 or HEC-HMS, should be used to determine pre-development and post-development discharges. Inflow and outflow hydrographs should be developed for existing and proposed conditions. Other computer programs may be used as long as the critical design parameters are identified and documented. See Section 202-4.03(03).

202-2.06 Determination of Precipitation Rate

The standard source for rainfall data to be used in the Rational Method or in the Unit Hydrograph Method is NOAA Atlas 14, Volume 2. It appears on http://www.nws.noaa.gov/oh/hdsc/. Navigate to the PF Data Server and select Indiana. The Rational Method rainfall term, I, is stated in in./h, so precipitation intensity should be selected in Data Description. Precipitation depth should be selected for input into the Unit Hydrograph method.

202-2.07 Determining Discharge

The determination of drainage area, runoff factors, time of concentration, and precipitation are used in determining discharge by either the Rational Method or a Unit Hydrograph Method. A computer program, such as TR-20 or HEC-HMS, should be used for the Unit Hydrograph Method. If using the Unit Hydrograph Method, the accepted rainfall distribution is the 50% probability Huff Distribution. The appropriate Quartile should be used based on the time period that is being applied. Sources of information regarding use of the Rational Method or Unit Hydrograph include Indiana LTAP, FHWA, AASHTO, etc. Section 202-3.0 lists other acceptable methods that can be used in determining discharge.

202-3.0 ACCEPTED METHODOLOGIES

202-3.01 Definition

Stream-flow measurements for determining a flood frequency relationship at a site are usually unavailable. Therefore, peak runoff rates and hydrographs can be estimated using statistical or empirical methods. The design discharge should be reviewed for other structures over the stream, historical data, and previous studies including flood-insurance studies. The discharge should be used that best reflects local project conditions with the reasons documented.

A consideration of peak-runoff rate for the design condition is adequate for a conveyance system such as a storm drain or open channel. However, if the design must include flood routing, e.g., storage basin, complex conveyance network, a flood hydrograph is required. Although the development of a runoff hydrograph, which is more complex than estimating peak-runoff rate, is accomplished using computer programs, some methods are adaptable to nomographs or other desktop procedures.

Where feasible, for a large structure, more than one method of computing discharge should be checked, comparing the results to what other structures in the area are designed to convey and the historical data for the area. Engineering judgment should then be used to select the discharge. It is seldom appropriate to only average estimates from the utilized methods. If practical, the method should be calibrated to local conditions and tested for accuracy and reliability. INDOT practice is to use the discharge that best reflects local project conditions with the reasons documented.

202-3.02 Selection of Discharge-Computation Method

The following provides additional guidance on the selection of hydrologic methods. These methods are used in determining the discharge for a culvert or bridge unless otherwise stated. If other methods are desired for use, contact the Office of Hydraulics for approval.

1. Rational Method. This method can be used for a developed area or a small drainage area. It can be used if the drainage area is less than 100 ac in an urban area or less than 200 ac in a rural area. The rational method must be used in the design of each roadway inlet and or storm drain.

2. NRCS (formerly SCS) Unit Hydrograph Method TR-20. This method can be most often used to determine peak discharge and hydrograph for a given drainage basin size. However, the results have less confidence in a very flat drainage basin with potential

watershed storage, or a very large drainage basin. This method is also used for design of a detention/retention pond or storage facility.

3. HEC-HMS. This hydrograph method can be used under the same conditions shown above for TR-20.

4. IDNR Letter of Discharge. The IDNR Letter of Discharge must be requested for a structure that requires a Construction in a Floodway Permit.

5. IDNR Coordinated Discharge Curves. This is the preferred method for a stream for which the information is available. The reference is *Coordinated Discharges of Selected Streams in Indiana*. It also appears on the IDNR-Water website.

6 Streamstats. This method can be used in conjunction with other methods. This method is valuable for setting parameters or justification as to what the appropriate discharge can be.

7. Frequency Analysis of Stream-Gaging Records. This method is considered to have high confidence on a larger watershed for which data is available, since it involves real-time data. The USGS, and the IDNR Division of Water, maintain a database of discharges for various frequencies computed using methodologies included in Water Resources Council Bulletin 17B.

8. Purdue Regression Equations. This method can be used in a rural area for estimating if no other method is available.

9. FEMA. The 1% exceedance probability specified in the applicable FEMA flood-insurance study should be used to analyze impacts of a proposed crossing on a regulatory floodway. However, if the discharge is considered outdated, the discharge based on current methods can be used subject to receiving the necessary regulatory approvals.

202-3.03 Q_{500} Determination for Scour Calculations [Added Feb. 2014]

The following methods, listed by preference, should be used to determine the Q_{500} for scour calculations.

1. Discharge published in a FEMA Flood Insurance Study (FIS). If there is a 0.2% annual EP discharge published by FEMA in a FIS, this discharge should take precedence over any other methodology.

2. Discharge derived from a coordinated discharge curve. The 0.2% annual EP discharge can be estimated by extrapolation from the Coordinated Discharge curves, using the following technique:

   a. Find the drainage area of the stream at the site of interest, and then determine the 10, 25, 50, and 100 year peak values from the graph.
   b. Plot these values on a semi log graph, with the peak discharge on the normal(y) axis, and the inverse of the return interval on the log (x) axis.
   c. Fit a straight line between these points, and the use the equation to derive a value at 0.002 (0.2%).

   See Figure 202-3B for an example.

3. Use a multiplier of the 1% annual EP discharge. If there are no discharges published in the FIS or in a coordinated discharge curve, then the 0.2% annual EP discharge can be derived from the 1% annual EP discharge by use of a multiplier, which varies by region. The different regions and the relevant multiplier are shown in Figure 202-3C. A GIS shape file is also available for download from the Department's Editable Documents page.

202-3.04 Selection of Discharge for Pump Station

The federal design criteria shown in HEC-24, *Highway Stormwater Pump Station Design*, should be followed for a pump station. The hydrological considerations shown in of HEC-24 Sections 5.3 through 5.5 should be utilized.

202-3.05 Selection of Methods Table

See Figure 202-3A for the typical methods choices based on facility.

202-4.0 DOCUMENTATION FOR HYDROLOGY

The following provides an explanation of the submittal requirements for a hydraulic report as it pertains to hydrology. See Chapter 203 for a list what should be included in the hydraulic report.

202-4.01 Culvert or Bridge

202-4.01(01) Narrative

The narrative should discuss the hydrological project background, existing and proposed facilities, upstream and downstream impacts, flooding issues, localized drainage issues, or other special circumstances. Discussion should also consider assumptions, constraints, and special instructions as they pertain to a culvert or bridge.

202-4.01(02) Drainage Area

A topographic map with drainage-area delineation should be provided. The preferred method is a manual delineation. However, for a large drainage area, this can be impractical. Computer-determined delineation such as USGS's STREAMSTATS or Purdue's HYMAPS-OWL may be used, but the determined drainage area should be verified for accuracy. Sometimes an incorrect drainage area is added or subtracted. For a large drainage area, *Drainage Areas of Indiana Streams*, which appears on the IDNR Division of Water website, may also be used. The time-of-concentration path should be shown on the delineation map if TR-55 is being used.

202-4.01(03) Rational or Unit Hydrograph Method

1. Soil Conditions. The submittal should include information pertaining to the value used for runoff. This may include a map of the varying soil characteristics within the watershed, documentation of the values chosen from a runoff table, and calculations used to determine a weighted average value where multiple soil or land-use types exist. The actual runoff tables should not be provided as long as the value used states the vegetation and soil type used to determine that value.

2. Time of Concentration (TR-55). The submittal should include the TR-55 worksheet (see Figure 202-2A), computer spreadsheet or similar spreadsheet that summarizes the time of concentration for sheet, shallow concentrated, or channel flow. Roughness *n* values chosen should refer to, but not necessarily include, the appropriate tables by stating the channel characteristics for that segment.

3. Rainfall. Rainfall information should be provided such as the computer output from NOAA Atlas 14.

4. Hydrograph Computer Program TR-20 or HEC-HMS. The input and the final output should be included in the report. Enough storm events should be run, so that a peak

discharge can be determined. The peak discharge should be highlighted within the output.

5. Site and Aerial Photographs. These should be provided for justification of design values. Site photographs must include views looking upstream and downstream at the crossing location.

202-4.01(04) Other Methods

For all other methods, input or output should be provided to the extent that another reader can identify the discharge determined and the assumptions that were made.

If using tables or charts to document assumptions, the assumption used should be highlighted or identified.

202-4.02 Pavement or Storm Drainage

202-4.02(01) Narrative

The narrative should discuss the hydrological project background, existing and proposed facilities, issues affecting offsite stormwater collection, upstream and downstream impacts, flooding issues, localized drainage issues, or other special circumstances. Discussion should also consider assumptions, constraints, and special instructions.

202-4.02(02) Drainage Area

A scaled topographic map with drainage-area delineation should be provided for each individual inlet or catch basin. The drainage area should include all land within the right of way draining to the inlet or catch basin, plus the off-site area as required.

202-4.02(03) Hydrologic Computations

The accepted method of determining runoff volume is the Rational Method. For required documentation, see Section 202-4.01(03).

202-4.03 Stormwater Storage

202-4.03(01) Narrative

The narrative should discuss the hydrological project background, the type of facility being proposed, i.e., side-ditch detention, subsurface storage, detention pond, retention pond, etc., existing and proposed drainage conditions, soil characteristics, infiltration potential, outfall restrictions, or other special circumstances. Discussion should also consider assumptions, constraints, and special instructions.

202-4.03(02) Drainage Area

A scaled topographic map with drainage-area delineation should be provided for the designed storage system. The watershed should delineate all areas draining to the storage system, including all off-site areas. For special-ditch grades that do not coincide with the roadway profile grade, and involve a side-ditch detention system, the watershed delineation should identify all ditch-grade breaks and be labeled showing high points and drainage-area divides.

202-4.03(03) Hydrologic Computations

Calculations should include a hydrograph method that shows storage volumes and discharges over time. Inflow and outflow hydrographs should be developed for existing and proposed conditions. See Section 202-4.01(03) for the required documentation. The calculations should identify the peak storage volume based upon different inflow storm events. See Section 203-5.0 for specific design criteria. For software modeling, sufficient computational informational and critical-design elements should be referenced for ease of review and understanding for a future analysis. An inflow/outflow discharge and storage-volume table may be required.

202-5.0 REFERENCES

1. AASHTO, *Highway Drainage Guidelines (2007)*, Chapter 2 (Hydrology), Chapter 5 (The Legal Aspects of Highway Drainage), and Chapter 12 (Stormwater Management)

2. AASHTO, *Model Drainage Manual*, 1991, 1997, or 2005.

3. Federal Highway Administration, Hydraulic Engineering Circular No. 19, *Hydrology*, 1994.

4. Highway Extension and Research Project for Indiana Counties and Cities, H-94-6, *Storm Water Drainage Manual*, July 1994.

5. Indiana Department of Natural Resources, *Coordinated Discharges of Selected Streams in Indiana*.

6. Indiana Department of Natural Resources, Division of Water, *Hydrology and Hydraulics in Indiana, Volume 1*, January 1986.

7. NOAA National Weather Service, *Hydrometeorological Design Studies Center*

8. USGS, Water-Resources Investigations Report 84-4134, *Techniques For Estimating Magnitude and Frequency of Floods on Streams in Indiana*.

9. Water Resources Council, Bulletin 17B, *Guidelines for Determining Flood Flow Frequency*, 1981.

TR-55 TIME-OF-CONCENTRATION WORKSHEET

Route: Project No.: Location:
Designer: Date:
Checked By: Date:

Present ☐ Developed ☐

T_c ☐ T_t ☐ Through subarea

A map, schematic, or flow-segments description is attached.

Sheet Flow, applies to T_c only Segment ID		
1. Surface description, see Figure 202-2B		
2. Manning's roughness coeff., *n*, see Figure 202-2B		
3. Flow length, *L* (total $L \leq 100$ ft)	ft	ft
4. Two-year 24-h rainfall	in.	in.
5. Land slope, *s*	ft / ft	ft / ft
6. $T_t = \frac{0.007(nL)^{0.8}}{(P_2)^{0.5}(s)^{0.4}}$	h	h

Total T_t in line 6 for both segments = h

Shallow Concentrated Flow Segment ID		
7. Surface description, paved or unpaved		
8. Flow length, *L*	ft	ft
9. Watercourse slope, s	ft / ft	ft / ft
10. Average velocity, *V*, see Figure 202-2D	ft / s	ft / s
11. $T_t = \frac{L}{3600V}$	h	h

Total T_t in line 11 for both segments = h

Channel Flow Segment ID		
12. Cross-sectional flow area, *a*	ft^2	
13. Wetted perimeter, P_w	ft	ft
14. Hydraulic radius, $r = a/P_w$	ft	ft
15. Channel slope, *s*	ft / ft	ft / ft
16. Manning's roughness coeff., *n*, see Figure 202-2C		
17. $V = \frac{1.49r^{2/3}s^{1/2}}{n}$	ft / s	ft / s
18. Flow length, *L*	ft	ft
19. $T_t = \frac{L}{3600V}$	h	h

Total T_t in line 19 for both segments = h

20. Add T_t in lines 6, 11, and 19 to get watershed or subarea T_c or T_t = h

EXAMPLE OF TR-55 TIME OF CONCENTRATION WORKSHEET

Figure 202-2A

Back

TYPE OF SURFACE	*n* VALUE
Smooth, such as concrete, asphalt, gravel, or bare soil	0.011
Rangeland	0.13
Short Grass	0.15
Cultivated Soil	0.17
Dense Grass	0.24
Light Woods and Underbrush	0.40
Dense Woods and Underbrush	0.80

MANNING'S ROUGHNESS COEFFICIENT, *n*, FOR SHEET FLOW
Adapted from Engman, 1983

Figure 202-2B

Back

Type of Surface	***n***
Fairly Regular Section	
Some grass and weeds, little or no brush	0.03 - 0.035
Dense growth of weeds, flow greater than weeds height	0.035 - 0.05
Some weeds, light brush on banks	0.035 - 0.05
Some weeds, heavy brush on banks	0.05 - 0.07
Some weeds, dense willows on banks	0.06 - 0.08
Trees within channel, branches submerged during high flow, increase value by	0.01 - 0.02
Irregular Section with Pools, Slight Channel Meander	
Increase value by	0.01 - 0.02
Steep Stream, Trees Only on Steep Banks	
Bottom of gravel, cobbles, and few boulders	0.04 - 0.05
Bottom of cobbles with large boulders	0.05 - 0.07
Floodplain	
Short grass	0.03 - 0.035
High Grass	0.035 - 0.05
Mature field crop	0.04 - 0.06
Scattered brush, heavy weed	0.05 - 0.07
Light brush and trees	0.06 - 0.08
Medium to dense brush and trees	0.10 - 0.16
Heavy stand of timber, few downed trees, little undergrowth	0.10 - 0.12

MANNING'S ROUGHNESS COEFFICIENT, *n*, FOR CHANNEL FLOW
Adapted from Chow, 1970

Figure 202-2C

Back

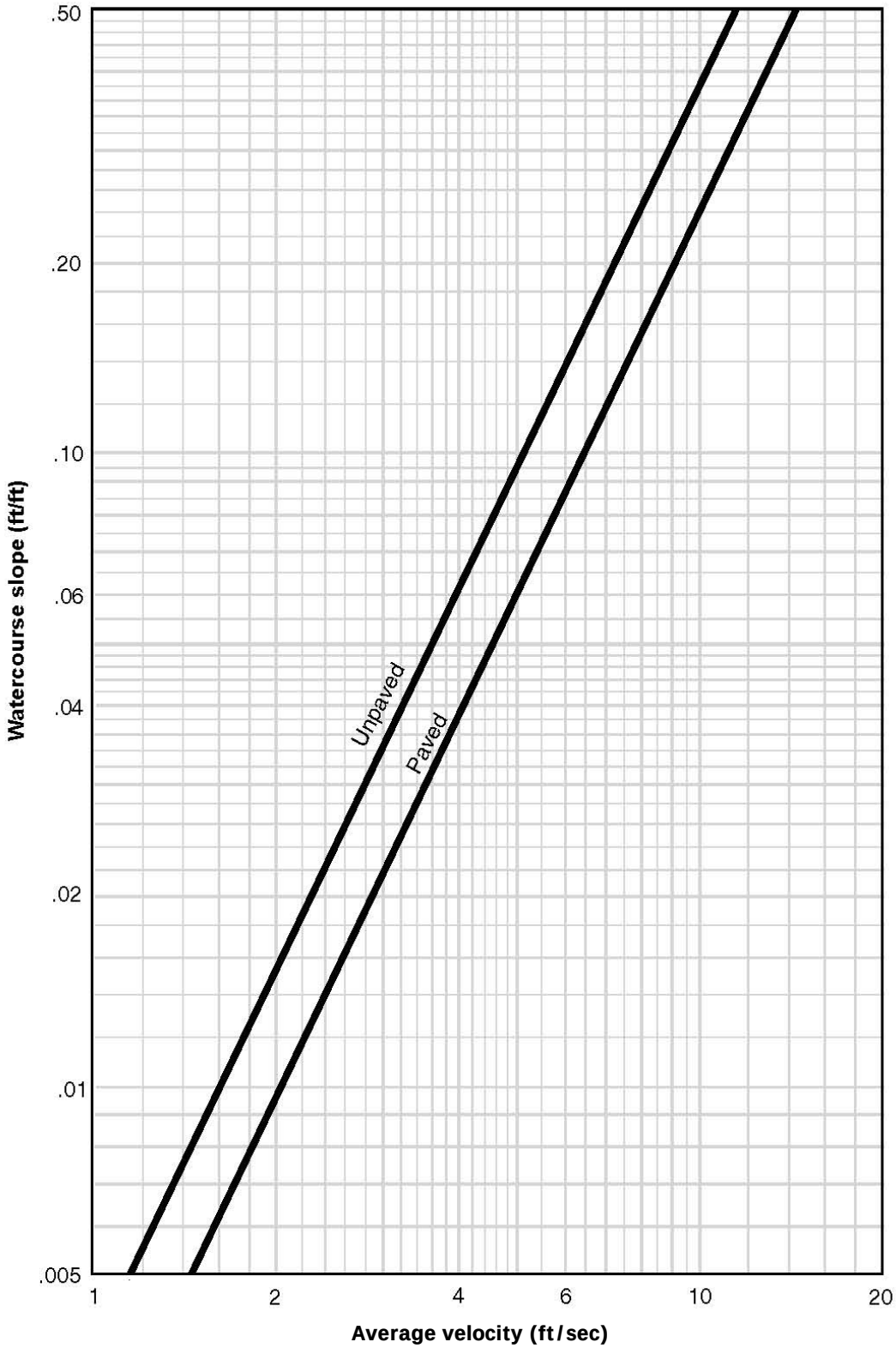

AVERAGE VELOCITIES FOR ESTIMATING TRAVEL TIME FOR SHALLOW CONCENTRATED FLOW

Figure 202-2D

Back

C Value for Rural Area			
Vegetation and Topography	**Open Sand Loam**	**Clay and Silt Loam**	**Tight Clay**
Woodland			
Flat, 0 ≤ slope < 5%	0.10	0.30	0.40
Rolling, 5 ≤ slope < 10%	0.25	0.35	0.50
Hilly, 10 ≤ slope ≤ 30%	0.30	0.50	0.60
Pasture			
Flat, 0 ≤ slope < 5%	0.10	0.30	0.40
Rolling, 5 ≤ slope < 10%	0.16	0.36	0.55
Hilly, 10 ≤ slope ≤ 30%	0.22	0.42	0.60
Cultivated			
Flat, 0 ≤ slope < 5%	0.30	0.50	0.60
Rolling, 5 ≤ slope < 10%	0.40	0.60	0.70
Hilly, 10 ≤ slope ≤ 30%	0.52	0.72	0.82

C Value for Urban Area	
Character of Surface	**Runoff Coefficient, *C***
Business	
Downtown	0.70 to 0.95
Neighborhood	0.50 to 0.70
Residential	
Single-Family	0.30 to 0.50
Multi-Units, Detached	0.40 to 0.60
Multi-Units, Attached	0.60 to 0.75
Residential Suburban	0.25 to 0.40
Apartment	0.50 to 0.70
Industrial	
Light	0.50 to 0.80
Heavy	0.60 to 0.90
Park, Lawn, Cemetery, Grassy Area	0.10 to 0.25
Railroad Yard	0.20 to 0.35
Unimproved	0.10 to 0.30
Pavement	
Asphalt or Concrete	0.80 to 0.95
Brick	0.70 to 0.85
Other Impervious	0.75 to 0.95
Water Impoundment	1.00

RATIONAL-METHOD RUNOFF COEFFICIENT, *C*
Adapted from Indiana LTAP, 2008

Figure 202-2E

Back

Runoff Curve Number for Rural Area				
Cover Type	**A**	**B**	**C**	**D**
Brush or Brush-Weed Mixture	35	56	70	77
Meadow	30	58	71	78
Pasture or Rangeland	49	69	79	84
Row Crops	67	76	83	86
Water	100	100	100	100
Woods and Grass, Orchard	43	65	76	82
Woods or Forest	36	60	73	79

Runoff Curve Number for Urban Area				
Cover Type	**A**	**B**	**C**	**D**
Open Space: Lawn or Golf Course				
Fair Condition, grass cover <75%	49	69	79	84
Good Condition, grass cover ≥75%	39	61	74	80
Street or Road				
Paved, open ditches, entire right of way	83	89	92	93
Gravel, open ditches, entire right of way	76	85	89	91
Earth, open ditches, entire right of way	72	82	87	89
Impervious	98	98	98	98
Urban Area				
Commercial or Business, 85% impervious	89	92	94	95
Industrial, 72% impervious	81	88	91	93
Residential Area				
1/8 acre, apartments, 65% impervious	77	85	90	92
1/4 acre, 38% impervious	61	75	83	87
1/3 acre, 30% impervious	57	72	81	86
1/2 acre, 25% impervious	54	70	80	85
1 acre, 20% impervious	51	68	79	84
2 acres, 12% impervious	46	65	77	82
Developing Urban Area				
Newly graded, pervious with no vegetation	57	73	82	86
Water	100	100	100	100

CURVE-NUMBER TABLE
Adapted from NRCS, July 1999

Figure 202-2F

Back

Facility Description	Methodology					
	Rational Method*	TR-20 or HEC-HMS	IDNR Coordinated Curves	USGS Gaging Information	Stream Stats	Purdue Regression Equations
Culvert	2	2	1	--	3	--
Bridge or Channel, < 5 sq mi drainage area	--	2	1	3	3	3
Bridge or Channel, ≥ 5 sq mi drainage area	--	3	1	2	3	3
Storm Drain and Inlets	1	4	--	--	--	--
Storage Facility	5	1	--	--	--	--
Pumping Station **	--	1	--	--	--	--

Notes: Must use IDNR Discharge Letter if IDNR Permit is required.

1 is the preferred method

2 is the preferred method if 1 is unavailable

3 is the secondary method

4 may be used if a complex facility exists

5 may be used for retention storage with no outlet

* Rational Method may be used only if drainage area is less than 100 ac in an urban area or less than 200 ac in a rural area.

** See HEC-24, Chapters 5.3 – 5.5.

SELECTION OF DISCHARGE-COMPUTATION METHOD

Figure 202-3A

Back

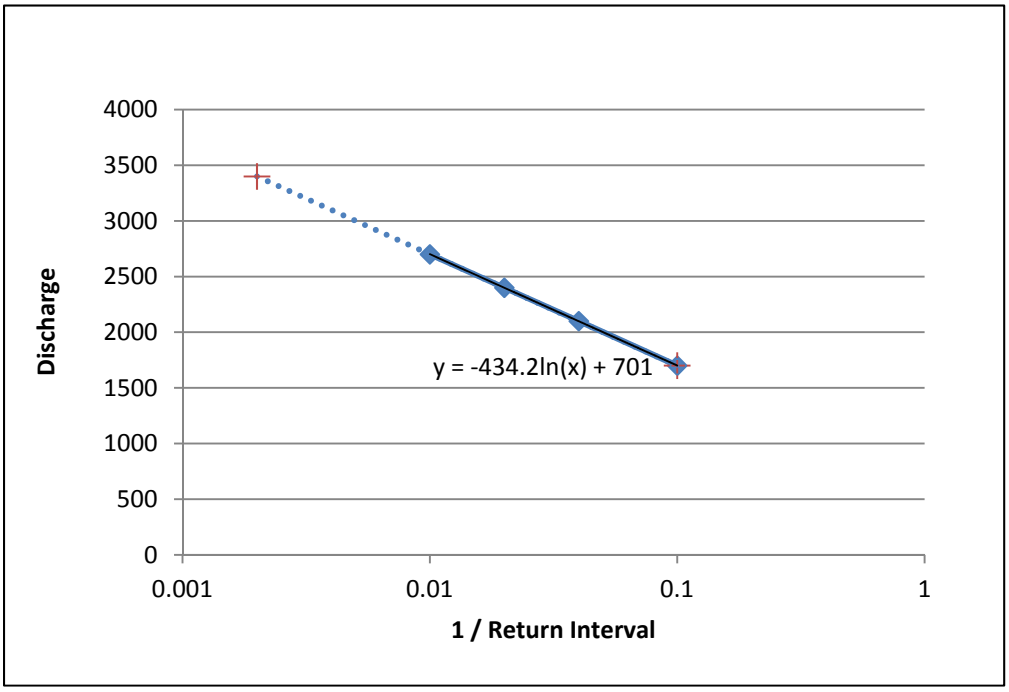

EXAMPLE OF GRAPHICAL METHOD FOR DETERMINING THE 0.2% EP

Figure 202-3B

Back

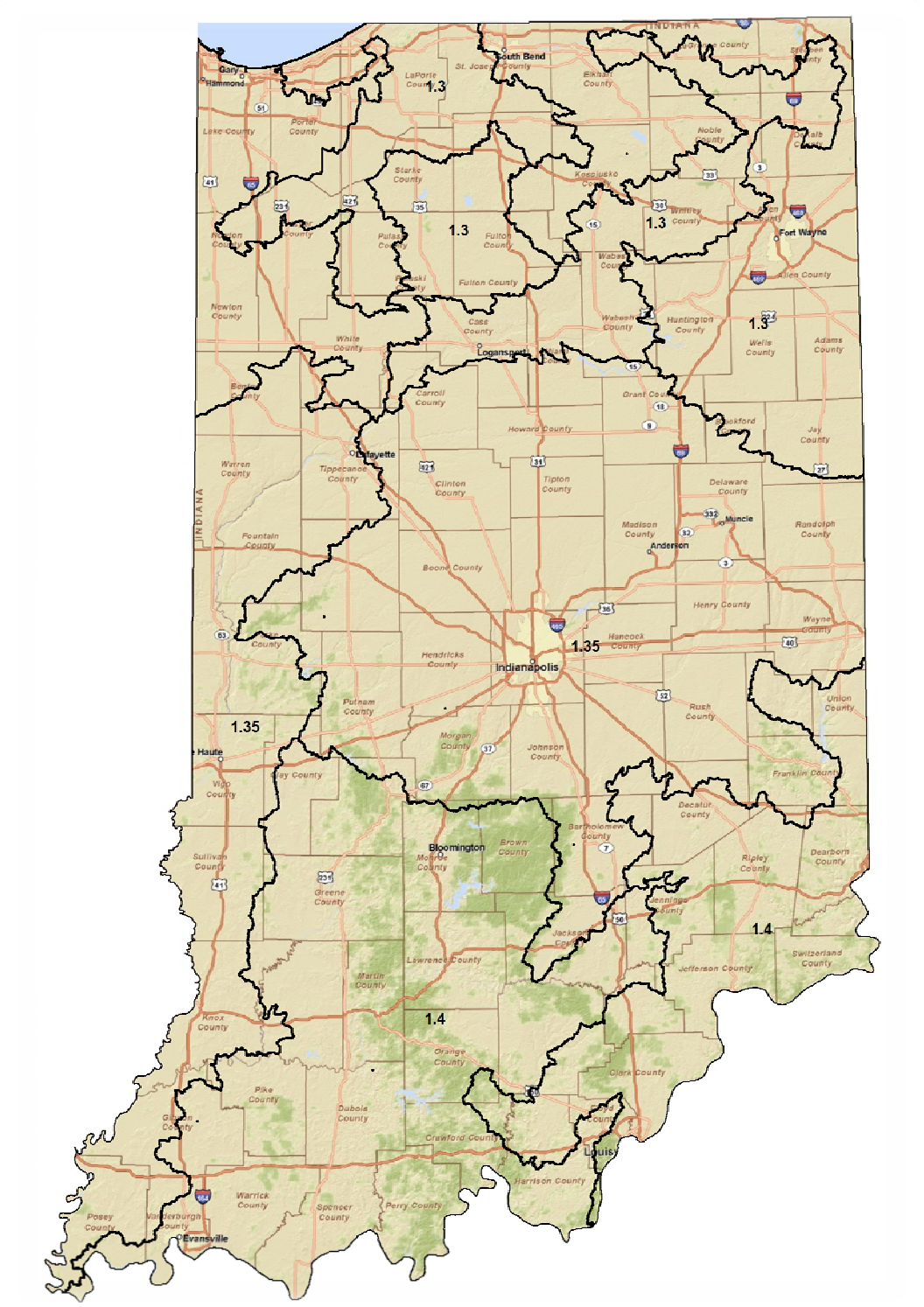

REGIONAL MULTIPLIERS FOR DETERMINATION OF 0.2% ANNUAL EP

Figure 202-3C

Back

CHAPTER 203

Hydraulics and Drainage Design

Design Memorandum	Revision Date	Sections Affected
13-04	Mar. 2013	203-2.02(10), 201-1.05 through 201-1.08
13-05	Mar. 2013	203-2.02(02)
13-11	May 2013	203-2.02(09), 203-2.02(15), 203-2.06(04), 203-4.04(06), Figure 203-4E, Figure 203-4 I
16-19	May 2016	203-2.02(02)
16-21	May 2016	203-2.02(13), Figure 203-2F

TABLE OF CONTENTS

TABLE OF CONTENTS 2

LIST OF FIGURES 6

203-1.0 INTRODUCTION 8

203-2.0 CULVERT 8
- 203-2.01 Introduction 8
- 203-2.02 Culvert Policy [Rev. Mar. 2013, May 2013, May 2016] 9
  - 203-2.02(01) Site Criteria 10
  - 203-2.02(02) Allowable Headwater (AHW) [Rev. May. 2016] 11
  - 203-2.02(03) Roadway-Serviceability Freeboard 13
  - 203-2.02(04) Structure Freeboard 14
  - 203-2.02(05) Maximum Velocity 14
  - 203-2.02(06) Minimum Velocity 14
  - 203-2.02(07) Temporary or Permanent Storage 14
  - 203-2.02(08) Culvert Skew 14
  - 203-2.02(09) Cover [Rev. May 2013] 14
  - 203-2.02(10) Culvert Sumping [Rev. Mar. 2013] 15
  - 203-2.02(11) Culvert Replacement 16
  - 203-2.02(12) Culvert-Sizing Process 16
  - 203-2.02(13) Pipe-Culvert-Interior Designation [Rev. May 2016] 16
  - 203-2.02(14) Pipe Lining 17
  - 203-2.02(15) Pipe or Box-Extension Structure-Sizing Process [Rev. May 2013] 18
  - 203-2.02(16) Energy Dissipator 19
- 203-2.03 Design Considerations 20
  - 203-2.03(01) Culvert Location 20
  - 203-2.03(02) Culvert-Hydrology Methods 20
  - 203-2.03(03) Tailwater Relationship 20
  - 203-2.03(04) Inlet or Outlet End Treatment 21
  - 203-2.03(05) Pipe-Length Determination 22
  - 203-2.03(06) Buoyancy Protection 22
  - 203-2.03(07) Relief Opening 23
  - 203-2.03(08) Erosion and Sediment Control 23
  - 203-2.03(09) Improved End Treatment 23
  - 203-2.03(10) Energy Dissipator 24
- 203-2.04 Design Procedures 25
  - 203-2.04(01) General 25
  - 203-2.04(02) Headwater Factors 26
  - 203-2.04(03) Tailwater Factors 26

203-2.04(04) Energy Dissipator ... 27
203-2.05 Specialty Structure ... 28
203-2.05(01) Precast-Concrete Box Culvert ... 28
203-2.05(02) Precast-Concrete Oversize Box Structure ... 29
203-2.05(03) Precast-Concrete Three-Sided Structure ... 29
203-2.06 Specialty-Structure Requirements ... 33
203-2.06(01) Wingwalls and Headwalls ... 33
203-2.06(02) Reinforcement Treatment ... 34
203-2.06(03) Scour Considerations ... 35
203-2.06(04) Backfilling [Rev. May 2013] ... 35
203-2.06(05) Plans Details, Design Computations, and Working Drawings ... 36
203-2.07 Documentation ... 36

203-3.0 BRIDGE ... 38
203-3.01 Introduction ... 38
203-3.02 Design Considerations ... 38
203-3.03 Design Procedure and Criteria ... 40
203-3.03(01) Bridge Sizing ... 40
203-3.03(02) Bridge-Hydraulics Modeling ... 43
203-3.03(03) Scour ... 44
203-3.03(04) Scour-Hydraulic Modeling Using HEC-RAS ... 45
203-3.03(05) Pressure-Flow Scour ... 47
203-3.04 Determination of Hydraulic- and Scour-Data Parameters ... 47
203-3.05 Documentation [Rev. May 2015] ... 49

203-4.0 PAVEMENT AND STORM DRAINAGE ... 50
203-4.01 Introduction ... 50
203-4.02 General Policy ... 51
203-4.03 Design Considerations ... 51
203-4.03(01) Corridor Plan ... 51
203-4.03(02) Local Issues ... 51
203-4.03(03) Existing Conditions ... 52
203-4.03(04) Downstream Conditions ... 52
203-4.03(05) Environmental Issues ... 52
203-4.03(06) Roadway Drainage ... 53
203-4.03(07) Bridge-Deck Drainage ... 53
203-4.03(08) Construction and Maintenance ... 54
203-4.04 Design Procedure and Criteria ... 54
203-4.04(01) Data Collection and Preliminary Sketch ... 54
203-4.04(02) Inlet Location ... 54
203-4.04(03) Inlet Spacing and Spread ... 55
203-4.04(04) Pipe Capacity, Non-Pressure Flow ... 56

203-4.04(05) Hydraulic Gradient, Pressure Flow 56
203-4.04(06) Minimum Pipe Diameter and Design Velocity [Rev. May 2013] 56
203-4.04(07) Pipe Cover 57
203-4.04(08) Connecting Inlets and Manholes 57
203-4.04(09) Sag Vertical Curve and Flanking Inlets 57
203-4.04(10) Slotted Drain 58
203-4.04(11) Underdrains 59
203-4.04(12) Roadside or Median Ditch 60
203-4.04(13) Curb and Gutter 60
203-4.04(14) Shoulder Gutter or Curb 61
203-4.04(15) Impact Attenuator 61
203-4.04(16) Bridge-Deck Drainage 61
203-4.04(17) Storm-Drainage-Agreement Policy 65
203-4.04(18) Computer Programs 66
203-4.05 Documentation 66
203-4.05(01) Spread Calculations for Inlet Spacing 67
203-4.05(02) Storm-Sewer Capacity 67
203-4.05(03) Hydraulic-Grade-Line Check 67
203-4.05(04) Plan and Profile 67
203-4.05(05) Additional Information 68

203-5.0 STORMWATER MANAGEMENT AND DETENTION 68
203-5.01 Introduction 68
203-5.02 General Policy 68
203-5.02(01) Reasons for Storage 68
203-5.02(02) Downstream Conditions 68
203-5.02(03) Local Jurisdictional Requirements 69
203-5.03 Design Considerations 69
203-5.03(01) Detention Pond 69
203-5.03(02) Retention Pond 70
203-5.03(03) Roadside-Ditch Detention 70
203-5.03(04) Underground Storage 71
203-5.03(05) Outlet Conditions 71
203-5.03(06) Maintenance 72
203-5.03(07) Safety Issues 72
203-5.04 Design Procedure 73
203-5.04(01) Detention Pond 73
203-5.04(02) Retention Pond 74
203-5.04(03) Roadside-Ditch Detention 74
203-5.04(04) Oversized Storm Sewer and Inline Detention 75
203-5.04(05) Infiltration Trench 75

203-5.05 Pump Station 76
203-5.06 Documentation 76

203-6.0 CHANNEL OR DITCH 76
203-6.01 Introduction 77
203-6.02 General Policy 77
203-6.02(01) Significance 77
203-6.02(02) Design 78
203-6.02(03) Federal Policy 78
203-6.02(04) INDOT Policy 78
203-6.03 Open-Channel Flow 79
203-6.04 Stream Channel 79
203-6.04(01) Stream Morphology 79
203-6.04(02) Design Considerations 79
203-6.04(03) Design Procedure 80
203-6.05 Roadside Channel or Other Ditches 80
203-6.05(01) Design Considerations 81
203-6.05(02) Design Procedure 81
203-6.05(03) Channel Lining 83
203-6.06 Bank Protection 85
203-6.06(01) Erosion Potential 85
203-6.06(02) Bank and Lining Failure Modes 86
203-6.06(03) Design Considerations 87
203-6.06(04) Design Procedure 92

203-7.0 REFERENCES 105

FIGURES 108

LIST OF FIGURES

Figure	Title
203-2A	Maximum Span Lengths for Culverts
203-2B	Minimum Pipe-Culvert Size
203-2C	Design-Storm Frequency for Bridge or Culvert
203-2D	Stream Velocity for Erosion Protection
203-2E	Pipe- or Box-Structure Sump Requirement
203-2F	Recommended Manning's n-Value for Culverts [Rev. May 2016]
203-2G	Joint Probability Analysis
203-2H	Entrance-Loss Coefficient, Outlet Control, Full or Partly Full
203-2 I	Entrance-Loss Coefficient, K_E, for Standard Culvert
203-2J	Minimum Riprap Apron Dimensions
203-2K	Details of Riprap Basin Energy Dissipator
203-2L	Riprap Basin Checklist
203-2M	Riprap Basin Depth of Scour
203-2N	Distribution of Centerline Velocity Flow from Submerged Outlets
203-2 O	Oversize-Box-Culvert Segments Weight and Length
203-2P	Determination of Acceptable Three-Sided Structure Alternates
203-2Q	Three-Sided Structure Perpendicular-Span Designations
203-2R	Three-Sided Structure-Rise Designations
203-2S	Scour Protection of Channel at Three-Sided Structure
203-3A	Values of Manning's n for Uniform Flow
203-3B	Riprap Scour Protection
203-3C	Hydraulics Quality Assurance Checklist
203-4A	Design Frequency for Allowable Water Spread
203-4B	Compatibility of Drainage Structures and Castings
203-4C	Manning's n-Value for Street or Pavement Gutter
203-4D	Inlet Capacity Chart
203-4E	Inlet Spacing Computation Sheet [Rev. May 2013]
203-4F	Manhole Types
203-4G	Flanking Inlet Locations
203-4H	Typical Floor Drain Sections
203-4 I	Storm Drain Computation Sheet [Rev. May 2013]
203-5A	Summary Performance Table for Storage
203-6A	Maximum Velocity in a Drainage Ditch
203-6B	Hypothetical Cross Section Showing Reaches, Segments, and Subsections Used in Assigning n-Values
203-6C	Lug Interval
203-6D	Longitudinal Extent of Revetment Protection

203-6E Wave-Height Definition Sketch
203-6F Correction Factor for Wave Runup
203-6G Wave Runup on Smooth, Impermeable Slopes
203-6H Riprap-Toe Dimensions
203-6 I Geotextile Filter
203-6J Typical Riprap Installation: Plan and Flank Details
203-6K Typical Riprap Installation: Side View
203-6L Launching of Riprap-Toe Material
203-6M Rock and Wire Mattress Configuration
203-6N Rock and Wire Mattress Installation Covering Entire Channle Perimeter
203-6 O Standard Gabion Sizes
203-6P Criteria for Gabion Thickness
203-6Q Minimum Coating Weight
203-6R Flank Treatment for Rock and Wire Mattress Designs
203-6S Typical Stacked-Block-Gabion Revetment Details
203-6T Monoslab Revetment
203-6U Armorflex
203-6V Petraflex
203-6W Articulated Concrete Revetment
203-6X Tri-Lock Revetment
203-6Y Grouted Riprap Sections
203-6Z Grouted Fabric-Formed Revetment (Type 1)
203-6AA Grouted Fabric-Formed Revetment (Type 2)
203-6BB Details and Dimensions of Three Soil-Cement Facings Design Guidelines

CHAPTER 203

HYDRAULICS AND DRAINAGE DESIGN

203-1.0 INTRODUCTION

This Chapter describes aspects of highway drainage such as that for a culvert, bridge, stormwater drainage, storage facility, pump station, or channel work. They should be accepted as the most common uses and desirable course of action. There can be exceptions that deviate from the policies shown. The Office of Hydraulics should be contacted for special considerations or changes to a particular design.

The goal is a design that is the most cost-efficient while still satisfying the criterion described below. In considering a cost-efficient drainage design, the initial cost should be considered, but facility longevity and future maintenance costs and legal and environmental constraints should be considered also.

203-2.0 CULVERT

203-2.01 Introduction

This Section provides design procedures for the hydraulic design of a highway culvert, which are based on FHWA Hydraulic Design Series Number 5 (HDS #5) *Hydraulic Design of Highway Culverts*. This Section also provides a summary of the design philosophy included in the AASHTO *Highway Drainage Guidelines*, Chapter IV.

A culvert is defined as follows.

1. A structure used to convey surface runoff through an embankment.

2. FHWA defines a culvert as a structure with a span length of 20 ft or less along the centerline of roadway between extreme ends of openings for multiple barrels. Figure 203-2A, Maximum Span Length for Culvert, provides schematics which define a culvert based on span length for various structural configurations.

3. A structure, as distinguished from a bridge, which is covered with embankment and is composed of structural material around the entire perimeter. However, it can be supported on spread footings with the streambed serving as the bottom of the culvert.

4. A structure such as a cast-in-place reinforced-concrete pipe, precast reinforced-concrete pipe, structural-plate arch, etc., which is designed hydraulically to take advantage of submergence to increase hydraulic capacity;

The culvert to be selected should best integrate hydraulic policy and economic and political considerations. The selected culvert should be based on construction and maintenance costs, risk of failure or property damage, roadside safety, land-use requirements, and satisfaction of the applicable structural and hydraulic criteria. Culvert design should also consider the adjacent channel. Considerations such as sumping, improved inlet, erosion at the inlet or outlet, are all an integral part of culvert design.

The failure of, or damage to, a culvert or detention-basin outlet structure can be traced to unchecked erosion. Erosive forces which are at work in the natural drainage network are often exacerbated due to the construction of a highway or other urban development. Interception and concentration of overland flow or constriction of a natural waterway inevitably results in an increased erosion potential. To protect the culvert and adjacent areas, an energy dissipater can be necessary.

203-2.02 Culvert Policy [Rev. Mar. 2013, May 2013, May 2016]

The following policies are specific to a culvert.

1. Each culvert should be hydraulically designed. However, the minimum pipe size specified in Figure 203-2B will sometimes control.

2. HY-8 and the HEC-RAS culvert modules are the only computer programs allowed for the hydraulic analysis of a culvert. The FHWA HDS #5 *Hydraulic Design of Highway Culverts* is also acceptable and available from the FHWA website.

3. HY-8 and the HEC-RAS culvert module have design limitations if the structure span approaches 20 ft. Therefore, in designing a replacement culvert, where the existing structure has a span of 20 ft or greater measured perpendicular to flow, only the HEC-RAS bridge module should be used for hydraulic analysis. Both the existing and proposed structures should be analyzed using the same module.

4. The Office of Hydraulics will review each culvert of diameter of 36 in. or greater. The Office reserves the right to review all culverts.

5. The design-storm frequency selected should be consistent with the criteria described in Figure 203-2C, Design-Storm Frequency for Bridge or Culvert.

6. Survey information should include topographic features, channel characteristics, high-water information, existing-structure data, and other related site-specific information.

7. Culvert location in both plan and profile should approximate the alignment of the natural channel to avoid sediment build-up in the barrel.

8. INDOT has a single-structure-opening policy to minimize debris accumulation.

9. The detail of documentation for each culvert site should be commensurate with the risk and importance of the structure. Design data and calculations should be assembled in an orderly fashion and retained for future reference as provided for in this Chapter.

10. The culvert design should incorporate the environmental requirements of IDNR, IDEM, USACE, and other applicable government agencies.

203-2.02(01) Site Criteria

1. Structure-Type Selection. A culvert is used at the locations as follows:

   a. where a bridge is not hydraulically required;
   b. where debris and ice are tolerable; or
   c. where its use will be more economical than a bridge.

2. Length and Slope. The culvert length and slope should be chosen to approximate existing topography and, as practical, the culvert invert should be aligned with the channel bottom and the skew angle of the stream. The roadway clear-zone requirements and the embankment geometry can dictate the culvert length. See Chapter 49.

3. Location in Plan. A severe or abrupt change in channel alignment upstream or downstream is not recommended. The following apply.
   a. A small culvert with no defined channel is placed perpendicular to the roadway centerline.

b. A large culvert perpetuating drainage in a defined channel should be skewed as necessary to minimize channel relocation and erosion.

c. All utilities should be located before determining the final location of a culvert to minimize conflicts.

4. Location in Profile. The culvert profile should approximate the natural stream profile. Exceptions which require approval by the Office of Hydraulics can be considered as follows:

   a. Arrest stream degradation by utilizing a drop-end treatment or broken-back culvert.
   b. Improve hydraulic performance by utilizing a slope-tapered end treatment.
   c. Avoid conflicts with other utilities that are difficult to relocate such as sanitary sewers.

5. Debris Control. Debris control should be designed using HEC-9 *Debris-Control Structures*, and can be considered as follows:

   a. where experience or physical evidence indicates that the watercourse will transport a heavy volume of controllable debris;
   b. for a culvert under a high fill; or
   c. where clean-out access is limited. However, access must be available to clean out the debris-control device.

203-2.02(02) Allowable Headwater (AHW) [Rev. May. 2016]

Allowable headwater is the depth of water that can be ponded at the upstream end of a culvert during the design flood. AHW will be limited by one or more of the following.

1. New Alignment. The maximum backwater, or increase in headwater elevation over the sum of TW depth plus inlet flowline elevation, should not exceed 0.14 ft. The maximum backwater may be modified if the backwater dissipates to 0.14 ft or less at the right-of-way-line or the channel is sufficiently deep to contain the increased elevation without overtopping the banks. If backwater remains within the channel banks or right of way, it is limited to a maximum of 1 ft.

   An exception to the 0.14 ft backwater allowance is subject to approval by the Office of Hydraulics.

2. Existing-Structure Replacement. The IDNR limits surcharge to 0.14 ft over existing conditions in an urban or rural location. Existing conditions are defined as the water-surface profile that results from those encroachments that were constructed prior to December 31, 1973. Although IDNR policy will allow for a slight increase over existing conditions, INDOT will not. This will allow future widening of the structure. If the backwater created by an existing structure is greater than 1 ft, the proposed backwater for the culvert replacement or extension should not be greater than 1 ft above the natural-channel flood profile. If the backwater created by an existing structure is less than 1 ft, the proposed backwater for the culvert replacement or extension should be less than or equal to that of the existing backwater.

3. In-Kind Culvert Replacement.

Due to site and cost considerations, small structures and culverts may be replaced in kind. Replacement in kind means that the existing structure can be replaced with a new structure having the same span, the same rise, and the same shape as the existing structure. Current policy requirements including but not limited to, sumping depth, cutoff walls, and roadway serviceability, continue to apply to the proposed structure.

Site Criteria. A candidate for an in-kind structure replacement will meet the following site criteria:

a. The existing culvert size meets or exceeds the minimum pipe size for the facility.

b. No record of flooding complaints at the structure.

c. No history of road overtopping at the required roadway serviceability, per INDOT Maintenance Division.

d. No evidence of scour issues at the outlet, including but not limited to scour holes, or structure undermining.

e. No known debris problems.

Hydraulic Parameters. Hydraulic modeling will be required to consider a replacement in kind structure. The following hydraulic parameters need to be met before a structure can be replaced in kind.

a. The existing backwater depth is less than 3 ft. See Section 201-2.0 for definitions.

b. The headwater elevation does not affect the finished floor elevation of any structures, houses, or buildings upstream of the structure.

c. The proposed backwater depth matches or improves the existing backwater depth.

d. If there is no evidence of existing scour issues, the design velocity should be less than or equal to the existing condition. If existing scour issues exist, the design velocity should be less than or equal to the existing condition and not be more than 150% of natural (tailwater) velocity.

If the existing structure meets the site criteria above, but does not meet the hydraulic parameters, the proposed structure may be upsized to meet the in-kind replacement hydraulic parameters.

If the in-kind culvert replacement policy conflicts with the existing-structure replacement policy, the least restrictive policy should be followed.

All structures should be designed for the appropriate design storm frequency. See Figure 203-2C.

4. Other. Other constraints on AHW include the following:

a. grades of adjacent drives;
b. finished floor elevation of adjacent buildings or other improvements; or
c. elevation of existing cropland or other property.

5. Inlet Depression. An inlet depression should be limited to a depth of not more than half of the rise of the structure. If the structure is required to be sumped, an inlet depression should not be used without prior approval of the appropriate resource agencies.

203-2.02(03) Roadway-Serviceability Freeboard

See Figure 203-2C, Design-Storm Frequency for Bridge or Culvert, for guidance regarding roadway-serviceability freeboard and design-storm frequency.

203-2.02(04) Structure Freeboard

There is no structure freeboard requirement for a culvert.

203-2.02(05) Maximum Velocity

Riprap or an energy dissipator should be used to manage the design-outlet velocity. See Figure 203-2D.

203-2.02(06) Minimum Velocity

The minimum velocity in the culvert barrel should result in a tractive force, $\tau = \gamma dS$, greater than critical τ of the transported streambed material at a low-flow rate. A flow rate of 3 ft/s should be used if the streambed-material size is not known.

203-2.02(07) Temporary or Permanent Storage

Storage should not be considered. Because upstream storage is not typically controlled by INDOT, it cannot be presumed to exist for the life of the structure.

203-2.02(08) Culvert Skew

The culvert skew should not exceed 45 deg as measured from a line perpendicular to the roadway centerline, without the approval of the Office of Hydraulics.

203-2.02(09) Cover [Rev. May 2013]

For a circular pipe, a minimum of 1 ft of cover, measured from the top of the pipe to the bottom of the asphalt or concrete pavement, should be provided. If the structure requires a deformed corrugated-interior pipe material, at least 1.5 ft of cover should be provided. The cover for a circular pipe structure should not exceed 100 ft. The cover for a deformed corrugated-interior pipe structure should not exceed 13 ft. If the pavement grade or structure-invert elevations cannot be adjusted to satisfy the cover criteria discussed above, the Office of Hydraulics should be contacted for additional instructions.

203-2.02(10) Culvert Sumping [Rev. Mar. 2013]

Sumping consists of placing the structure-invert elevation and scour protection at a specified depth below the waterway or stream flowline to satisfy the IDEM Water Quality Section 401 permit requirements. Sumping allows the natural movement of stream-bed material through the structure. Sumping should be provided for each structure over Waters of the United States and Waters of the State.

1. Three-Sided Structure. The sump depth should be 18 in. for a stream bed of sand, 12 in. for a stream bed of other soil, or 3 in. for a stream bed of rock or till. The stream bed and scour protection should be as shown on the INDOT *Standard Drawings*. A base slab should be used only if the geotechnical report identifies flowline-area soil that will not support riprap. No increase in structure size is required due to sumping. The sump area will not require backfill as part of the contract work, but will be allowed to fill in naturally over time.

2. Pipe or Box Structure. Such a structure should be sumped as shown on the INDOT *Standard Drawings* and Figure 203-2E, Pipe- or Box-Structure Sump Requirement.

If the required sump exceeds 3 in., the structure diameter or rise may need to be increased by the sump value. The structure's design capacity should be checked to determine if such increase is required. If a pipe end section or riprap is required, these should be sumped to the same depth as the structure. The sump area of the structure and end section or riprap will not require backfill as part of the contract work, but will be allowed to fill in naturally over time.

Changes to the flowline elevation can occur between the initial project survey and construction. Significant changes to the flowline elevation may require an adjustment to the invert or top of footing elevation to ensure the appropriate sump is constructed. Where sumping is required, a note should be placed on the General Plan sheet for Bridge Plans or Structure Details and General Notes sheets for Road Plans as follows:

> Contractor shall verify the existing flowline elevation to set the appropriate sump depth.

The designer should coordinate with the Office of Hydraulics to determine the necessary elevation adjustments. Typically, if the difference between the flowline elevation shown on the plans and existing flowline is half the sump depth or greater, the structure elevations should be lowered accordingly to provide the sump as shown on the plans. If the existing flowline elevation is higher than the flowline elevation shown on the plans, no changes are required to the structure elevations.

Scour-protection limits should be shown on the plans. Quantities for geotextile and riprap, or a base slab intended for scour protection, should be determined and identified as such in the Structure

Data table for each applicable structure. Appropriate columns have been incorporated into the Structure Data table.

203-2.02(11) Culvert Replacement

The proposed structure span should be equal to or greater than the existing span unless prior approval is given from the Office of Hydraulics. Each culvert with a diameter of 48 in. or greater that is to be replaced will require a geotechnical report.

203-2.02(12) Culvert-Sizing Process

The culvert-sizing process is performed in accordance with a priority system. The design priority system is as follows.

1. Single Circular-Pipe Installation.
2. Single Deformed-Pipe Installation.
3. Single Specialty-Structure Installation.
4. Multiple Circular-Pipes Installation.
5. Multiple Deformed-Pipes Installation.
6. Multiple Specialty-Structures Installation.

The principles of the priority system are summarized below.

1. A pipe structure is preferred to a specialty structure, e.g., precast reinforced-concrete box section, precast reinforced-concrete three-sided culvert, structural plate arch.
2. A circular pipe is preferred to a deformed pipe.
3. A single-cell installation is preferred to a multiple-cell installation.
4. Multiple-cell installation should be considered as a last resort. If a multiple-cell installation is being considered, the Office of Hydraulics should be contacted.

203-2.02(13) Pipe-Culvert-Interior Designation [Rev. May 2016]

For a circular pipe, smooth, semi-smooth, or corrugated alternates are required. For a deformed pipe, both smooth and corrugated alternates are required. The smooth-interior hydraulic design will be based on a minimum Manning's *n* value of 0.012. The semi-smooth interior will be based on a minimum Manning's *n* value of 0.015. For corrugated-pipe design, the Manning's *n* value should be in accordance with accepted engineering practice. See Figure 203-2F for typical values.

The two hydraulic designs for an individual structure will be based on identical pipe lengths and invert elevations.

If separate hydraulic designs are performed for smooth and corrugated interior pipes, the following situations are possible.

1. The required smooth interior, semi-smooth interior, and corrugated interior pipe sizes are identical. The structure callout on the plans should include the required pipe size. No reference to an interior designation is made.

2. The required smooth interior, semi-smooth interior, and corrugated interior pipe sizes are different. The structure callout on the plans should indicate that the structure requires a smooth pipe of one size, a semi-smooth pipe of another, or a corrugated pipe of another.

3. An acceptable pipe size can be determined for one interior designation but not the others. If this occurs, the structure callout on the plans should indicate the required pipe size and interior designation.

203-2.02(14) Pipe Lining

1. Introduction. Pipe lining is a technique for rehabilitating a culvert in poor condition where replacement is difficult. Pipe lining can be used for a circular or deformed culvert.

   The common types of pipe lining that have been standardized are high-density polyethylene (HDPE) pipe or a cured-in-place (CIPP) system. If other types of pipe liners are to be considered, the Office of Hydraulics should be contacted for approval. Pipe-lining considerations include the following.

   a. The structure barrel should be relatively straight, not significantly damaged, and basically intact.

   b. The backfill around the structure should be free from large voids.

   c. There should be sufficient room to work from at least one end of the existing structure.

   d. The structure is in a location where a road closure is undesirable or impractical.

2. Design Criteria. A structure may not increase backwater over existing conditions. Exceptions to this will require justification and approval by the Office of Hydraulics.

a. Riprap scour protection should be used as shown in Figure 203-2D.

b. The smooth-interior hydraulic design will be based on a minimum Manning's *n* value of 0.012.

c. An HY-8 hydraulic analysis of each proposed pipe liner should be completed.

d. Deviation from the design criteria will require a design exception subject to Office of Hydraulics approval.

e. The largest possible liner should be used, though a smaller liner can be hydraulically adequate.

f. Because of cost, a CIPP liner should be considered only if the HDPE liner cannot be applied. A CIPP liner should be used only in an existing structure with an equivalent diameter of 96 in. or less.

g. A CIPP liner will reduce the existing structure size as follows.

(1) For an equivalent diameter of 24 in., the diameter is reduced by 1 in.

(2) For an equivalent diameter of 27 in. through 48 in., the diameter is reduced by 2 in.

(3) For an equivalent diameter of 54 in. through 72 in., the diameter is reduced by 3 in.

(4) For an equivalent diameter of 78 in. through 96 in., the diameter is reduced by 4 in.

203-2.02(15) Pipe or Box-Extension Structure-Sizing Process [Rev. May 2013]

The sizing of a pipe-extension structure should be in accordance with the following.

1. Match Existing Pipe Size and Interior Designation. If practical, the pipe extension should be the same size and material as the existing pipe. When metal pipe is selected, the base metal and coating specified shall match the existing pipe. However, at this stage, it is necessary only to identify the required interior designation for the extension.

2. Perform Appropriate Hydraulic Analysis. The appropriate hydraulic calculations should be performed to verify whether the extended structure meets existing headwater conditions or is contained within the channel or INDOT right-of-way. Because the structure's interior designation is known, it is necessary only to perform hydraulic calculations appropriate for that interior designation.

3. Headwalls and Anchors. Removal of headwalls or anchors damages the existing structure. As a minimum, 40 in. of new structure should be placed for each headwall removed. Each protruding headwall which is not in accordance with the obstruction-free-zone criteria should be considered for removal or modification. A headwall which is shielded from

impact by guardrail should not be removed unless it is located within clearance range of the guardrail as shown in Figure 49-4A.

4. Age and Condition. The remaining life expectancy of the existing structure should be evaluated in comparison to the proposed extension.

If the extended structure satisfies the required design criteria, the structure-sizing process is complete. If the extended structure does not satisfy the required design criteria, replacement of the existing structure with a new structure should be reevaluated. If it is not practical to replace the existing pipe because of construction method, traffic maintenance, or other constraints, the Office of Hydraulics should be contacted for further instructions.

A Structure Data Table should be included in the plans for drainage structures requiring modification. Details sheets should be provided where required.

203-2.02(16) Energy Dissipator

An energy dissipator is used to protect the culvert and downstream channel from scour. The two primary types of scour are local scour and channel degradation. Local scour is the result of high-velocity flow at the culvert outlet and extends only a limited distance downstream. Channel degradation can proceed in a fairly uniform manner over a long length or can be evident in one or more abrupt drops, or headcuts, progressing upstream with each runoff event.

The culvert should be designed independent of the dissipator design, with the exception of an internal dissipator, which may require an iterative solution. The culvert design should be completed before the outlet protection is designed and should include computation of outlet velocity. The downstream channel protection should be designed concurrently with the dissipator design.

A culvert will likely require outlet protection. The class of riprap used for outlet protection should be sized in accordance with Figure 203-2D. For a side ditch that does not carry a live stream, sod can be used at the outlet. Seeding should be used if the design velocity is less than 2 ft/s.

For a structure that creates an outlet velocity greater than 13 ft/s, an energy dissipater will be required unless either of the following conditions are satisfied. Otherwise Class II riprap should be used.

1. The existing outlet velocity is already greater than 13 ft/s, there are no signs of scour at the outlet, and the proposed outlet velocity does not increase over existing velocity.

2. The natural stream has an average velocity that is at least 70% of the proposed outlet velocity.

203-2.03 Design Considerations

In addition to INDOT's hydraulic policy, other design considerations that should be evaluated are described below.

203-2.03(01) Culvert Location

A culvert should be located and designed to present a minimum hazard to vehicular and pedestrian traffic. Where necessary as directed, a means should be provided for personnel and equipment access to facilitate maintenance.

203-2.03(02) Culvert-Hydrology Methods

See Chapter 202 for information on hydrology. A constant peak discharge is assumed for culvert design and will yield a conservatively-sized structure where temporary storage is available but not considered.

203-2.03(03) Tailwater Relationship

A larger waterway downstream should be checked to determine if its flood elevations can backwater through the system and affect road serviceability. If this potential exists, a joint stream probability analysis should be performed (see Figure 203-2G) to check the correct storm events that should be analyzed for potential road overtopping. The joint stream probability analysis is based on the peak discharges of both the design stream and the larger downstream waterway occurring at different times. The analysis compares the streams at different storm designs based on their difference in drainage area.

203-2.03(04) Inlet or Outlet End Treatment

The culvert end-treatment type should be selected from the list shown below based on the given considerations and the entrance loss coefficient, K_E. See Figures 203-2H and 203-2 I for the recommended values of K_E. Roadside safety should be considered in the selection and design. See Chapter 49 for a discussion of practices for the safety treatment of a drainage structure.

The following discusses the types of culvert end treatments and their advantages and disadvantages.

1. Projecting Inlet or Outlet.

    a. Extends beyond the roadway embankment.
    b. Susceptible to damage during roadway maintenance or an errant vehicle.
    c. Has a low construction cost.
    d. Has poor hydraulic efficiency for thin material.
    e. Should include anchoring the end treatment to strengthen the weak leading edge for a culvert of diameter of 42 in. or larger.
    f. Can be strengthened by use of a concrete collar, if necessary.

2. Mitered End Treatment.

    a. Hydraulically more efficient than a thin edge projecting.
    b. Should be mitered to match the fill slope.
    c. Should include anchoring the end treatment to strengthen the weak leading edge for a culvert of diameter of 42 in. or larger.

3. Improved End Treatment.

    a. Should be considered for a culvert which will operate in inlet control.
    b. Can increase the hydraulic performance of the culvert, but can also add to the total culvert cost. Therefore, it should be used only if economically justified.

4. Pipe End Section.

    a. Used to retain the roadway embankment to avoid a projecting culvert barrel.
    b. Used where the side slopes of the channel are unstable.
    c. Used where the culvert is skewed to the normal channel flow.
    d. Provides the best hydraulic efficiency if the flare angle is between 30 and 60 deg.
    e. Should be provided for a precast-concrete drainage structure.

5. Wingwall.

   a. Available for either corrugated metal or concrete pipe.
   b. Retards embankment erosion and incurs less damage from maintenance.
   c. Can improve a projecting metal pipe entrance by increasing hydraulic efficiency, reducing accident hazard, and improving the pipe entrance's appearance.
   d. Is hydraulically equivalent to a headwall, but can be equivalent to a beveled or side-tapered entrance if a flared, enclosed transition occurs before the barrel.

6. Apron.

   a. Used to reduce scour from a high headwater depth or from approach velocity in the channel.
   b. Should extend at least one pipe diameter upstream.
   c. Should not protrude above the normal streambed elevation.
   d. May be constructed of riprap and an appropriate geotextile or concrete.
   e. Should be set at the structure invert elevation.

7. Cutoff Wall.

   a. Used to prevent piping along the culvert barrel and undermining at the culvert end.
   b. Should be used for a culvert with headwalls.
   c. Depth should be of minimum 20 in., or as shown in the INDOT *Standard Drawings* or *Standard Specifications.*

8. Weep Hole. A weep hole should not be used.

203-2.03(05) Pipe-Length Determination

After the structure size and cover have been determined, the required length should be determined. The design length for a culvert structure should be rounded to the next higher 1 ft.

203-2.03(06) Buoyancy Protection

Pipe end sections, concrete anchors, or other means of anchoring should be considered for a flexible culvert where a projecting end treatment or outlet is used.

The severity of buoyancy depends on the steepness of the culvert slope, depth of the potential headwater which debris blockage can increase, flatness of the upstream fill slope, height of the fill,

large culvert skew, or mitered ends. For anchor details, see the INDOT *Standard Drawings* and *Standard Specifications.*

203-2.03(07) Relief Opening

Where a culvert serving as a relief opening has its outlet set above the normal stream flow line, precautions should be made to prevent headcutting or erosion from undermining the culvert outlet.

203-2.03(08) Erosion and Sediment Control

Temporary measures should be shown on the plans. For more information, see Chapter 205.

203-2.03(09) Improved End Treatment

An improved end treatment is a flared culvert inlet with an enlarged face section and a hydraulically-efficient throat section. An improved end treatment can have a depression, or fall, incorporated into the end-treatment structure or located upstream of the end treatment. The depression is used to exert more head on the throat section for a given headwater elevation. Therefore, an improved end treatment improves culvert performance by providing a more-efficient control section, which is the throat. An improved end treatment with a fall also improves performance by increasing the head on the throat. For information concerning the design of an improved end treatment, see HDS-5.

The selected culvert end treatment has the implications as follows.

1. A culvert end which is projecting or mitered to the fill slope offers no outlet protection.
2. Headwalls provide embankment stability and erosion protection. They provide protection from buoyancy and reduce damage to the culvert.
3. Commercial end sections add little cost to the culvert and may require less maintenance, retard embankment erosion, and incur less damage from maintenance.

Wingwalls are used where the side slopes of the channel are unstable, where the culvert is skewed to the normal channel flow, to redirect outlet velocity, or to retain fill.

203-2.03(10) Energy Dissipator

In designing an energy dissipator, chosen alternatives should satisfy the topography, design policies, and criteria. Alternatives should be analyzed for environmental impact, hydraulic efficiency, and risk and cost. The selected dissipator should satisfy the selected structural and hydraulic criteria. It should also be based on construction and maintenance costs, risk of failure or property damage, traffic safety, environmental or aesthetic considerations, political or nuisance considerations, and land-use requirements.

The Office of Hydraulics allows a variety of energy-dissipator methods. These include corrugated metal pipes, riprap aprons, riprap basins, internal dissipators, stilling basins, or other external dissipators. The dissipator type selected for a site should be appropriate for the location.

Although technically not an energy dissipator, the higher Manning's *n* value for a corrugated metal pipe provides some velocity reduction at the outlet.

A riprap apron is the most commonly used form of energy dissipation and scour protection. It is a riprap pad located at the outlet of the culvert. The minimum apron dimensions are shown in Figure 203-2J, Riprap Apron. Site conditions can dictate a longer apron.

A riprap basin, also referred to as a designed scour hole, is the most common energy dissipator where a riprap apron is not sufficient. It is acceptable for use where undermining of the culvert outlet will not occur, the expected scour hole will not cause costly property damage, and there is no nuisance effect. The design of a scour hole is described in Section 203-3.03(04). Other dissipators should be considered if there is limited right of way.

An internal dissipator includes the tumbling-flow type and the increased-resistance type. This should be used only for an inlet-control situation where the flow near the outlet of the culvert is shallow enough. This should be used where the scour hole at the culvert outlet is unacceptable, the right of way is limited, debris is not a problem, or moderate velocity reduction is required.

This Chapter does not address the design of an internal dissipator. See FHWA HEC-14 and FHWA/OH-84/007 *Internal Energy Dissipators* if a design procedure is required.

Another type of external dissipator can be used where the riprap basin is not acceptable and a moderate amount of debris is anticipated. This can include USBR Type VI Impact, CSU rigid boundary, Contra Costa, hook, or hydraulic jump. This Chapter does not address the design of this type of external dissipator. See HEC-14 if a design procedure is required.

A stilling basin is used where the riprap basin is not acceptable, and debris is anticipated. This can include Saint Anthony Falls (SAF), USBR Type II, USBR Type III, or USBR Type IV. This

Chapter does not address the design of this type of stilling basin. See HEC-14 if a design procedure is required.

This Chapter does not address the design of a drop structure. See HEC-14 if a design procedure is required.

Additional factors should be considered in designing an energy dissipator. If ice buildup is a factor, it should be mitigated by sizing the structure to not obstruct the winter low flow, and by using an external dissipator. The flood frequency used in the design of the energy dissipator should be the same flood frequency used for the culvert design. The downstream hydraulic conditions should be evaluated to determine a tailwater depth and the maximum velocity for an open channel. A lake, pond, or large water body should be evaluated using the high-water elevation that has the same frequency as the design flood for the culvert.

The material selected for the dissipator should be based on a comparison of the total cost over the design life of alternate materials and should not be made using first cost as the only criterion. This comparison should consider replacement cost, the difficulty of construction, and traffic delay.

Traffic should be protected from an external energy dissipator by locating it outside the appropriate clear-zone distance as described in Chapter 49.

203-2.04 Design Procedures

203-2.04(01) General

An exact theoretical analysis of culvert flow is complex. First, the analysis of non-uniform flow with regions of both gradually varying and rapidly varying flow should be performed. Then, the flow-type changes should be determined as the flow-rate and tailwater elevations change. Backwater and drawdown calculations, and energy and momentum balances, should be completed. Results of hydraulic-model studies should be applied. It should be determined if hydraulic jumps occur and if they are inside of or downstream of the culvert barrel. Calculations can be simplified, based on the following.

1. Control Section. The control section is where there is a unique relationship between the flow rate and the upstream water-surface elevation. Inlet control is governed by the inlet geometry. Outlet control is governed by a combination of the culvert end-treatment geometry, the barrel characteristics, and the tailwater elevation.

2. Minimum Performance. This is assumed by means of analyzing both inlet and outlet control and using the highest headwater elevation. The culvert can operate more efficiently

at times with more flow for a given headwater level, but it will not operate at a lower level of performance than calculated.

3. Culvert Sizing. The culvert-sizing process should satisfy the criteria as follows:

   a. allowable headwater elevation at 1% annual EP;
   b. roadway serviceability for storm of specific magnitude, depending on functional classification; and
   c. maximum pipe-outlet velocity or energy-dissipator design.

4. Computer Software. The HY8 software and the HEC-RAS Culvert Module are acceptable design methods for structure sizing.

203-2.04(02) Headwater Factors

1. Headwater depth is measured from the flowline of the inlet-control section to the surface of the upstream pool.

2. Inlet area is the cross-sectional area of the face of the culvert. The inlet-face area is the same as the barrel area.

3. Inlet-edge configuration describes the entrance type. Inlet-edge configurations include thin-edge projecting, mitered, square edge in a headwall, and beveled edge. See Figure 203-2H for the edge configuration of a culvert inlet.

4. Inlet shape is the same as that of the culvert barrel. Shapes include rectangular, circular, elliptical, and arch. The shape should be checked for an additional control section, if different than the barrel.

203-2.04(03) Tailwater Factors

1. The hydraulic conditions of the downstream channel should be evaluated to determine a tailwater depth.

2. Backwater curves should be calculated for sensitive locations, or a single cross-section analysis should be used.

3. The existing outlet depth may be used in lieu of the tailwater depth if the culvert outlet is operating with a low tailwater depth or a free outfall.

4. The headwater elevation of a nearby downstream culvert should be used if it is above the channel depth.

203-2.04(04) Energy Dissipator

Since the riprap basin is the preferred energy dissipator where the riprap apron is not adequate, design procedures are as follows. The riprap-basin design is based on laboratory data obtained from full-scale prototypical installations. The features of the basin include the following:

1. pre-shaping and lining with riprap of median size, d_{50};
2. constructing the floor at a depth of h_S below the invert, where h_S is the depth of scour that will occur in a pad of riprap of size d_{50};
3. sizing d_{50} so that $2 < h_S/d_{50} < 4$;
4 sizing the length of the dissipating pool to be $10h_S$ or $3W_o$, whichever is larger for a single barrel. The overall length of the basin is $15h_S$ or $4W_o$, whichever is larger;
5. angular-rock results were approximately the same as the results for rounded material; and
6. layout details are shown on Figure 203-2K, Riprap-Basin Energy Dissipator.

When high tailwater conditions, $TW/y_o > 0.75$, exist, the following characteristics apply. The high-velocity core of water emerging from the culvert retains its jet-like character as it passes through the basin. The scour hole is shallower and longer than that found in a low-tailwater condition. Riprap may be required for the channel downstream of the rock-lined basin.

An editable version of Figure 203-2L, Riprap-Basin Design Checklist, appears on the Department's website at www.in.gov/dot/div/contracts/design/dmforms/.

1. Determine Input Flow. y_o or y_E, V_o, Fr at the culvert outlet, and y_E, the equivalent depth at the brink = $(A/2)^{0.5}$.
2. Check TW. Determine if $TW/y_o \leq 0.75$.
3. Determine d_{50}.
   a. Use Figure 203-2M, Riprap-Basin Scour Depth.
   b. Select d_{50}/y_E. Satisfactory results will be obtained if $0.25 < d_{50}/y_E < 0.45$.
   c. Obtain h_S/y_E using Fr.
   d. Check if $2 < h_S/d_{50} < 4$ and repeat until d_{50} is found to be within the range.
4. Size basin as shown in Figure 203-2K.
   a. Determine length of the dissipating pool, $L_S = 10h_S$ or $3W_o$ minimum.
   b. Determine length of basin, $L_B = 15h_S$ or $4W_o$ minimum.
   c. Thickness of riprap:
      (1) Approach, $3d_{50}$ or $1.5d_{max}$

(2) Remainder, $2d_{50}$ or $1.5d_{max}$

5. Determine V_B.
   a. Basin exit depth, y_B = critical depth at basin exit.
   b. Basin exit velocity, $V_B = Q/W_B y_B$.
   c. Compare V_B with the average normal flow velocity in the natural channel, V_d.
6. High-Tailwater Design.
   a. Design a basin for low-tailwater conditions, Steps 1-5.
   b. Compute equivalent circular diameter, D_E, for brink area as follows:

$$A = \frac{\pi D_E^{\ 2}}{4} = y_o W_o$$

   c. Estimate centerline velocity at a series of downstream cross sections using Figure 203-2N, Distribution of Centerline Velocity for Flow from Submerged Outlets.
   d. Size riprap using Figure 203-2D.
7. Filter Placement. Geotextile should be placed under a riprap feature.

The dissipator geometry can be computed using the HY-8, Culvert Analysis Software, Energy Dissipator module.

203-2.05 Specialty Structure

Perpendicular-span length is measured between the inside faces of the structure walls, perpendicular to them. Structural-span length is measured between the inside faces of the structure walls, along the roadway centerline.

203-2.05(01) Precast-Concrete Box Culvert

A precast-concrete box culvert may be recommended by the Office of Hydraulics. The maximum perpendicular span for a box culvert is 12 ft. The recommended layout method for a box culvert is to extend it to the point where the roadway sideslope intercepts the stream flowline. The sideslope at the end or outcrop of a box culvert should be protected with guardrail or be located beyond the clear zone.

203-2.05(02) Precast-Concrete Oversize Box Structure

A precast-concrete oversize box structure may be recommended by the Office of Hydraulics. A box structure is considered oversize if its clear-perpendicular-span length is more than 12 ft. Commercially available oversized boxes seem to be limited to 20 ft span in the Indiana region. Any oversized box structure greater than 20 ft should be hydraulically modeled as a bridge. Product information is available from local suppliers. If contacting a supplier, the designer should provide the most general information about project location. The designer should contact at least two suppliers of the same product.

The hydraulic-recommendations letter will indicate if a three-sided structure with a base slab is an acceptable alternate to an oversize box structure. The designer should contact the Office of Hydraulics for guidance as to whether the two structure types are interchangeable for the specific site. A cost comparison should be used in making the final structure selection.

An oversize box culvert should be laid out so that the total structure length is a multiple of the box-segment length for the given box size. It is not necessary to add a tolerance for the joints between segments in determining the total structure length. The typically-available segment weights and lengths are shown in Figure 203-2 O. For a 9-ft through 12-ft rise, at least one box-structure supplier should be contacted for available weights and lengths.

203-2.05(03) Precast-Concrete Three-Sided Structure

A precast-concrete three-sided structure may be recommended by the Office of Hydraulics.

1. Structure Sizing and Selection. The designer will choose either the flat-topped, arch-topped, or true-arch structure section, show it on the plans and reference, by note, the other sections. The designer will determine the hydraulic size for the alternate structures.

   The hydraulic recommendations will include the Q_{100} elevation, the assumed flowline elevation, the required perpendicular span, and the required waterway opening for all structure sections. The designer will determine the rise of the structure for all structure sections. The minimum desirable freeboard requirement will be 1 ft for a flat-topped or an arch-topped structure, with the low-structure elevation determined at the structure centerline for each section. The minimum desirable freeboard requirement will be 2 ft for a true-arch structure. If the designer elects to use a freeboard of less than desirable, the designer should obtain the concurrence of the Office of Hydraulics manager.

   Figure 203-2P should be used as guidance for determining the acceptable alternates to show on the plans.

The arch-topped structure will likely have a greater perpendicular-span requirement than the flat-topped structure where it is used with less than 2 ft of freeboard. The arch-topped structure will not be included as an alternate in the hydraulics recommendation letter if its required perpendicular span exceeds that of the flat-topped alternate by more than 4 ft. The true-arch structure will likely have a greater perpendicular-span requirement than the flat-topped or arch-topped structure.

Where the required structural span exceeds 30 ft, the designer will also provide the required waterway opening for a spill-through bridge. The designer will size an appropriate bridge and perform an economic comparison between the bridge and the three-sided structure options.

The dimensional designation shown in Figure 203-2Q for perpendicular span, and Figure 203-2R for rise, should be used for designating each required three-sided structure. The plans should show the structure size in feet.

2. Segment Configuration and Skew. Skew should be rounded to the nearer most-practical 5 deg, although the nearer 1 deg is permissible where necessary.

It is not necessary for the designer to determine the exact number and length of segments. The final structure length and segment configuration will be determined by the fabricator and may deviate from that implied by the plans. However, a minimum horizontal clearance of 6 ft must exist between the front face of guardrail and the outside face of the structure headwall where the drainage-structure end is within the clear zone.

Square segments are more economical if the structure is skewed. Laying out the structure with square segments will result in the greatest right-of-way requirement and thus allow ample space for potential redesign by the contractor, if necessary, to another segment configuration.

For a structure with a skew of 15 deg or less, structure segments may be laid out square or skewed. Skewed segments are preferred for a structure of less than 80 ft length. Square segments are preferred for a longer structure. However, skewed segments have a greater structural span. A structure with a skew of greater than 15 deg requires additional analysis as described in the AASHTO *LRFD Bridge Design Specifications*. Skewed segments and the analysis both contribute to higher structure cost.

For a structure with a skew of greater than 15 deg, structure segments should be laid out square. If hydraulic conditions dictate the use of a flat-topped structure only, the segments may be laid out skewed if the structure is relatively short.

A number of flat-topped structures are built with skewed segments, i.e., segments shaped, in plan view, like parallelograms. However, some INDOT structures have been redesigned to use only square segments. Where a flat-topped structure is laid out with ends parallel to the roadway, skewed segments are implied by the designer.

The preferred layout scheme for an arch-topped structure with a skew of greater than 15 deg should assume square segments with a sloping top of headwall to yield the shortest possible wingwalls. Where an arch-topped structure is laid out with skewed ends, therefore, headwalls parallel to the roadway, the skew will be developed within the end segments by varying the lengths of the legs as measured along the centerline of the structure. The maximum attainable skew is controlled by the difference between the full-segment leg length as recommended by the arch-topped-structure fabricator and a minimum leg length of 2 ft.

If the roadway above the structure is to be constructed in two phases, a segment-skew configuration should be proposed which is compatible with the anticipated construction-phasing line between construction phases. Therefore, if the structure length is 80 ft or greater, a unique special provision should be included to require the contractor to design and detail segments or cast-in-place construction required to conform to the construction line between phases. These details should be reviewed by the designer at the time of the working-drawings submission.

3. Plans Requirements for Structure Layout and Detailing. The designer should use the perpendicular span and rise for the structure section shown on the plans as a reference for the information required on the title sheet. The structure type to be shown on the title, Layout, and General Plan sheets should be precast reinforced-concrete three-sided structure.

The General Plan should include a note as follows:

> An alternate structure type with a _____-ft perpendicular span and a _____-ft rise may be substituted for the structure shown on the Layout sheet.

Where a flat-topped structure is the only option permitted, the General Plan should include a note as follows:

A three-sided arch-topped or true-arch structure will not be permitted at this location.

The elevations to be provided on the General Plan or other detail sheet are as follows:

a. Q_{100};
b. flow line, at both structure ends and the roadway centerline;
c. the low structure at the centerline of the structure;
d. the tops of headwalls; and
e. the tops of wingwalls.

The assumed elevations of the top of the footing and the base of the structure leg should also be shown. For structure-layout purposes, a 2-ft footing thickness should be assumed with the base of the structure leg seated 2 in. below the top-of-footing elevation. With the bottom of the footing placed at the standard depth of 4 ft below the flowline elevation, the base of the structure leg should therefore be shown as 2'-2" below the flowline. An exception to the 4-ft depth will occur where the anticipated footing thickness is known to exceed 2 ft, where the footing must extend to rock, or where poor soil conditions dictate that the footing should be deeper.

The footing should be kept level if possible. If the stream grade prohibits a level footing, the wingwall footings should be laid out to be constructed on the same plane as the structure footings.

The structure length and the flare angle, and the length and height of wingwalls should be shown. For a skewed structure, the wingwall geometrics should be determined for each wing. The sideslope used to determine the wing length should be shown on the plans.

A structure should extend to a point where the headwall height can be kept to a minimum, preferably 1 ft. All headwalls should have standard-length-post guardrail protection unless the structure cover does not permit it. Where structure cover does not permit a standard headwall and standard-length-post guardrail installation, another option as shown on the INDOT *Standard Drawings* should be shown, with the selected low-cover guardrail option. A minimum of 6 ft of clearance should exist horizontally between the face of guardrail and the outside face of the structure headwall.

If the height of the structure legs exceeds 10 ft, pedestals should be shown in the structure elevation view. For illustration purposes, the pedestals should be drawn at approximately 2-ft width, but the dimensions and details should not be shown. The pedestal height should be included in the rise dimension specified in the pay-item name.

The design and details for footings or base slabs, wingwall footings, wingwalls, and headwalls will be provided by the structure manufacturer once the working drawings are submitted. The designer who prepared the contract plans will review the design

calculations and working drawings. For a federal-aid local-agency project, such documents are reviewed and approved by the local agency or its design consultant.

Wingwall-anchorage system, wing thickness, wall thickness of precast units, corner chamfer dimensions of precast units, footing-width, or footing-reinforcement information that suggest a proprietary product should not be identified as such on the plans. Such details will be shown on the working drawings.

The General Plan should include the design-data information as follows:

> Designed for HL-93 loading in accordance with AASHTO *LRFD Bridge Design Specifications*, [current-edition year], and all subsequent interim specifications.
>
> Dead load increased 35 psf for future wearing surface.

Quantities for the structure and wingwall footings should be included with those for the structure and the wingwalls, respectively. Quantities for headwalls and foundation excavation should also be included in those for the structure.

4. Foundations. The allowable soil bearing pressure should be shown on the plans. If the footing is on piling, the nominal driving resistance should be shown.

   Where a pile footing is required, the type and size of pile and the required pile spacing, and which piles are to be battered, should be shown on the plans. The final design of the pile cap will be performed by the fabricator, and the details will be shown on the working drawings as is the practice for other footing types. If the geotechnical report recommends that piling be used, the structure-type selection should be re-evaluated to consider a spill-through bridge due to the added expense of pile footings.

The plans for a three-sided structure should include a sheet showing the soil boring logs for the structure.

203-2.06 Specialty-Structure Requirements

203-2.06(01) Wingwalls and Headwalls

Wingwalls and headwalls are required without regard to structure type or size. Such wingwalls and headwalls may be precast or cast in place.

The information to be shown on the plans is as follows:

1. a plan view showing the total length of the structure, skew angle, distance from roadway centerline to each end of structure, and the flare angle of all wingwalls;

2. an elevation view of the end of the structure including wingwalls and headwall if applicable. The perpendicular span and rise of the structure should be dimensioned. The height of the headwall should be shown;

3. wingwalls labeled A through D with a table showing all dimensions and elevations for each wingwall, and summarizing the wingwall areas required; and

4. the allowable soil bearing pressure. A table should be included on the plans listing the soil parameters for wingwall design as follows:

    a. angle of friction between wingwall footing and foundation soil, δ;
    b. angle of internal friction of the foundation soil, φ;
    c. ultimate cohesion of foundation soil, C; and
    d. ultimate adhesion between foundation soil and concrete, C_A.

These soil parameters will be provided in the geotechnical report for the structure. If the geotechnical report is lacking this information, it should be requested from the Office of Geotechnical Services.

Quantities should be determined for headwalls and wingwalls.

If a project includes at least one precast-concrete box structure, and at least one precast-concrete three-sided drainage structure, each with wingwalls, the wingwalls' quantities for both types of structures should not be combined.

203-2.06(02) Reinforcement Treatment

If the distance between the top of the pavement and the top of the structure is less than 2 ft as measured at the edge of travel lane, all reinforcement in a three-sided structure or an oversized box structure should be coated. Coated reinforcement should be indicated in the Structure Data Table's structure-description name.

203-2.06(03) Scour Considerations

The standard footing depth of 4 ft below the flowline and the riprap protection shown on the INDOT *Standard Drawings* will suffice for scour protection in a routine installation. Riprap and geotextile used in the waterway should be shown on the plans in the plan view and labeled as Scour Protection.

Figure 203-2 S should be used to determine the type of scour protection required for a three-sided structure, or the channel. The riprap type and quantity should be shown on the plans. A note should be placed on the plans, similar to the following:

> Quantities of ___ tons of [Class 1] [Class 2] [revetment] riprap and _____ sys of geotextile shall be placed as scour protection.

For a routine installation, the riprap and geotextile shown on the INDOT *Standard Drawings* will suffice for scour protection on the stream banks adjacent to the wingwalls or projecting ends of the structure. Quantities of riprap and geotextile used on the stream banks adjacent to the wingwalls or projecting ends of the structure should be shown on the plans.

If an IDNR Construction in a Floodway, IDEM Water Quality 401, or a U.S. Army Corps of Engineers 404 permit application is required, the required scour quantities of riprap or cast-in-place concrete should be incorporated into the application. If one or more of these permits has already been granted, the designer must provide the quantities information to the Environmental Services Division's Ecology and Permits Team. The Team leader will then apply for a permit amendment.

For a three-sided structure, if the allowable soil bearing pressure is less than 1000 lb/ft^2, or where the stream velocity exceeds 13 ft/s, a concrete base slab should be provided instead of a conventional strip footing. Details of the base-slab method of scour protection are shown on the INDOT *Standard Drawings*. If the allowable soil bearing pressure is not extremely low or where the stream velocity does not exceed 13 ft/s, the cost effectiveness of providing a base slab versus providing a strip footing with scour protection should be considered. The input of the district Office of Construction should be requested at the preliminary field check if the costs appear to be equal.

203-2.06(04) Backfilling [Rev. May 2013]

Where there is less than 2 ft of cover between the top of the structure and the top of the proposed pavement structure, as measured at the edge of travel lane, the backfill should be structure backfill type 5 to the top of the structure. The backfill above the top of the structure should be structure backfill type 2.

Where there is 2 ft or more of cover between the top of the structure and top of the proposed pavement structure, as measured at the edge of travel lane, all backfill should be structure backfill type 2.

The minimum and maximum cover distances should be shown in the Structure Data Table. The material used to backfill the structure should be also used to backfill the wingwalls.

The minimum cover distance between the top of the structure and the top of the pavement section should be equal to the pavement-section thickness. If the minimum cover distance is less than the pavement-section thickness, the Planning Division's Office of Pavement Engineering should be consulted for the minimum pavement thickness to be used above the structure.

For a three-sided structure, the structure and wingwall backfill limits should be shown on the plans. The backfill limits should have a width of 1.5 ft at the bottom of the footing and should extend upward at a slope rate of 1:4. The wingwalls' backfill should extend upward at a 1:1 slope from the bottom of the wingwall footings. The structure fabricator will also be required to show the backfill limits on the shop drawings. The backfill pay limits should be based on the neat-line limits shown on the plans. The type of structure backfill and the quantities for excavation and structure backfill should be shown on the plans.

203-2.06(05) Plans Details, Design Computations, and Working Drawings

Only the conceptual layout for a precast-concrete three-sided or box structure, or precast wingwalls and headwalls, should be shown on the plans. The structure centerline, minimum perpendicular span, minimum structural span, minimum rise, and minimum Q_{100} hydraulic-opening area should be shown on the Layout sheet.

Once the work is under contract, the fabricator will design and detail the structure. For each cast-in-place structure, three-sided structure, or for each box structure of perpendicular span greater than 12'-0" or of a size not described in ASTM C 1577, the fabricator will provide design computations and working drawings which are to be checked by, and are subject to the approval of, the designer.

203-2.07 Documentation

The hydraulic report and necessary software data or input files should be submitted to the Office of Hydraulics for review and acceptance. All relevant information should be cross referenced if

utilized in other sections of the report. The information in the report should include, but should be not limited to, the following:

1. project-specific overview, including stating location, purpose, vertical datum used, and other pertinent information;
2. Topographic Map with drainage area and flow path for Time of Concentration delineated and labeled, including north arrow and graphic scale bar;
3. aerial photo with drainage area delineated;
4. Summary Table with the information, if applicable, as follows:

    a. drainage area;
    b. Q_{100} flow;
    c. Q_{100} water-surface elevation;
    d. structure size and type;
    e. inlet-edge condition;
    f. backwater depth;
    g. culvert velocity;
    h. headwater elevation;
    i. road overflow area;
    j. outlet-erosion protection;
    k. sump depth;
    l. outlet-flowline elevation;
    m. minimum low structure elevation;
    n. approximate skew; and
    o. inlet-depression depth.

5. hydrology calculations which can include the Rational Method, Hydrograph (TR-20, HEC-HMS, etc.), curve numbers, Manning's *n* values, Time of Concentration, etc.
6. HY-8. Only information for the recommended structure, primary alternates, and existing structure should be included if applicable. The input file, output file, and version of software used should be included for the reviewer's use;
7. plans including cross-section of downstream channel, road plan and profile, and layout sheet if applicable;
8. site photos with key map;
9. backwater calculation with a justification of backwater and its effects, i.e., remains in channel, below finish floor elevation, or contained within the right of way;
10. other calculations, meeting minutes, local testimony, telephone log, permits, etc., to add clarity;
11. coordination with county surveyor; and
12. energy-dissipator calculations and files.

203-3.0 BRIDGE

203-3.01 Introduction

FHWA defines a bridge as a structure with a total span of more than 20 ft, measured along the centerline of the roadway. For a multiple-pipe structure, this includes the distance between the pipes. For hydraulic purposes, a structure with a span greater than 20 ft, perpendicular to the direction of flow, is considered a bridge. Each bridge defined by the Office of Hydraulics should be modeled using HEC-RAS bridge analysis.

The following define bridge criteria and considerations, including modeling and report-documentation requirements.

203-3.02 Design Considerations

The following should be considered in designing a bridge for hydraulic purposes.

1. Various stream-crossing systems should be evaluated to determine the most cost-effective proposal consistent with design constraints.

2. Emergency access, safety, and consequences of catastrophic failure should be considered.

3. The legal requirements of government agencies and their policies and restrictions, including permits should be considered. See Chapter 201 for a list of the involved agencies.

4 The Office of Environmental Services should be contacted to determine all permitting and environmental requirements.

5. Backwater should not increase flood damage to property upstream of the crossing, and will satisfy IDNR requirements.

6. For a project on new alignment, flood easements should be considered in a rural area, or where land is inexpensive, as a possible cost-saving measure.

7. The effects of road or bridge realignment altering the flood-elevation location and potentially causing property damage due to flooding should be considered.

8. Velocity through the structure should not damage the highway facility or adjacent property.

9. The existing flow distribution should be maintained as is practical.

10. In designing for overtopping, the crest-vertical curve profile location should be considered as the preferred highway-crossing profile to allow for embankment overtopping.

11. The downstream conditions should be studied, including those at other bridges or larger streams that can have the potential to flood back up to the structure. The proposed bridge should then satisfy the road-serviceability requirements due to the downstream flood backwater.

12. Side ditches should be checked to ascertain that their elevation is below the water-surface elevation, and that the flow does not spill over and affect road serviceability in adjacent watersheds.

13. Forms of degradation and aggradation should be considered as imposing a permanent future change for the stream-bed elevation at a bridge site if they can be identified. If the waterway shows signs of meandering or change over time, historical aerial photographs and topographical mapping should be examined to determine possible present and future impacts. Bridge location, size, pier type and placement, skew, or channel and bank stability measures may need to be adjusted accordingly.

14. The location of the opening should account for future stream meandering, floodplain effects, and possible damage to wetlands or other environmental concerns. An overflow structure can be required for a very wide floodplain.

15. Pier spacing, pier orientation, and abutments should be designed to minimize flow disruption and potential scour. Piers should be kept out of the main channel where possible.

16. Foundation design for new bridges or scour countermeasures for existing bridges should be provided to avoid failure due to scour.

17. Pier spacing and freeboard at the structure should be designed so that debris or ice can pass.

18. Minimal disruption of ecosystems and values unique to the floodplain and stream should be considered.

19. A level of traffic service should be provided that is compatible with that expected for the class of highway and the projected traffic volume.

20. Choices should be designed that are supported with costs for construction, maintenance, and operation, including probable repair and reconstruction and potential liability.

21. The proposed structure's span should be equal to or greater than the existing span unless prior approval is given from the Office of Hydraulics.

203-3.03 Design Procedure and Criteria

203-3.03(01) Bridge Sizing

The following criteria are required for hydraulic bridge sizing.

1. Design-Storm Frequency. Figure 203-2C should be used to determine the appropriate storm event for design. It shows the design-storm requirements for allowable backwater, outlet velocity, and road-serviceability freeboard.

2. Allowable Backwater. This is the difference caused by a bridge between the upstream water-surface elevation and the natural condition with no bridge at the same location. The backwater is the maximum proposed bridge value that occurs at a given cross-section location. The design-storm requirements are shown in Figure 203-2C.

   If the existing bridge has a backwater of greater than 1 ft, the proposed bridge has an allowable backwater equal to or less than 1 ft. If the existing bridge has a backwater less than or equal to 1 ft., the proposed bridge has an allowable backwater equal to or less than the backwater of the existing bridge. If the proposed bridge is on new alignment, the allowable backwater is 0.14 ft. For exceptions, see item 10 below.

   FHWA does not require economic justification for a bridge that causes less than 1 ft. of backwater. Therefore, a formal risk assessment will not be required.

3. Outlet Velocity. The design-storm frequency shown in Figure 203-2C should be used to determine the appropriate storm event for design. Figure 203-2D should be used to determine the appropriate riprap size based on outlet velocity.

4. Road-Serviceability Freeboard. The headwater elevation from the bridge should maintain a road-serviceability freeboard to the edge of pavement based on the facility level shown in Figure 203-2C. If the facility level allows, embankment overtopping may be incorporated into the design, but should be located away from the bridge abutments and superstructure. The required road serviceability should be maintained throughout the entire flood reach of the stream. A larger downstream waterway should be checked to determine if its floodwaters can backwater through the system and affect road serviceability. If this potential exists, a joint-stream probability analysis should be performed to check the

correct storm events that should be analyzed for potential road overtopping. See Figure 203-2G. The joint-stream probability analysis is based on the peak discharges of both the design stream and the larger downstream waterway occurring at different times. The analysis compares the streams at different storm designs based on their difference in drainage area.

5. Structure Freeboard. Where practical, a minimum clearance of 2 ft should be provided between the Q_{100} elevation and the low chord of the bridge to allow for passage of ice and debris. Where this is not practical, the clearance should be established based on the type of stream and level of protection desired as approved by the Office of Hydraulics. For example, 1 ft should be adequate for a small stream that normally does not transport drift. An urban bridge with a grade limitation can provide no freeboard. A 3-ft freeboard is desirable for a major river which is known to carry large debris. The crest vertical-curve profile is the preferred highway crossing profile in allowing for embankment overtopping at a lower discharge.

6. Span Lengths. Where possible, a single-span bridge is desired in lieu of a multi-span bridge, though this may sacrifice desired structure freeboard. The minimum span length for a bridge with more than three spans should be 100 ft for those spans over the main channel. A three-span bridge should have the center span length maximized at a site where debris can be a problem. For a two-span bridge, span lengths are subject to approval of the Office of Hydraulics.

7. Channel Clearing. This consists of the removal of sediment to enlarge the waterway opening. Channel clearing should not occur within 1 ft of the Ordinary High Water elevation. Where the Ordinary High Water elevation is less than 1 ft above the flowline elevation, channel clearing should not occur within 2 ft of the flowline elevation.

8. Multiple-Opening Structure. A multiple-opening structure is used in a wide floodplain to pass a portion of the flow once the stream reaches a certain stage. The objectives in choosing the location of a multiple opening include the following:

   a. maintenance of flow distribution and flow patterns;
   b. accommodation of relatively large flow concentrations on the floodplain;
   c. avoidance of floodplain flow along the roadway embankment for a long distance;
   d. crossing of significant tributary channels; and
   e. possible reduction of the size of the main bridge and the overall cost of the project.

   The technological weakness in modeling a multiple opening is in the use of a one-dimensional model, such as HEC-RAS, to analyze two-dimensional flow. The development of a two-dimensional model, such as FESWMS, is a step toward more-

adequate analysis of a complex stream-crossing system. The most complex factor in designing a multiple opening is determining the division of flow between two or more structures. If incorrectly proportioned, one or more of the structures can be overtaxed during a flood event. The design of a multiple opening should be generous to guard against that possibility.

9. Temporary-Runaround Structure. A temporary-runaround structure is typically operational for three months to two years. Therefore, the serviceability criteria are greatly reduced. At a minimum, such a structure should be serviceable during a 50% annual EP discharge.

   Figure 203-2C should be checked to determine the road-serviceability design storm required. The edge of pavement should be above the headwater elevation of the required design storm.

   The backwater should be determined for the 1% annual EP discharge event. For a structure requiring an IDNR permit, the backwater at 1% annual EP should not exceed 0.14 ft over existing conditions. IDNR should be contacted for further guidance. For a structure not requiring an IDNR permit, the backwater from the 1% annual EP event should not exceed 1 ft below the finished-floor elevations of nearby buildings or residences. Impacts to crops and yards should be allowed for only a short duration.

   The most cost-efficient temporary-runaround structure is achieved by lowering the roadway profile as much as possible while still obtaining the required road serviceability.

10. New-Alignment Bridge. For a new bridge on a new alignment, the maximum backwater should not exceed 0.14 ft. The 0.14 ft maximum may be modified as follows:

    a. the backwater dissipates to 0.14 ft or less at the right-of-way line;
    b. the channel is sufficiently deep to contain the increased water height without overtopping the banks; the backwater is less than or equal to 1 ft; and the maximum velocity is not excessive; or
    c. a flood easement can be purchased upstream of the bridge to allow for greater than 0.14 ft of backwater.

    In a rural area where land costs are minimal, the cost savings may be substantial to purchase flood easements and reduce the bridge-structure size. The use of flood easements should be identified early in the design stage so that they can be included in any land purchasing. However, flood easements are still limited to the maximum 1-ft backwater requirement.

An exception to the 0.14-ft backwater allowance for a new bridge on a new alignment is subject to approval of The Office of Hydraulics.

11. Bridge that Requires an IDNR CIF Permit. The water-surface elevation cannot be increased more than 0.14 ft from existing conditions outside the right of way. The IDNR *Floodplain Guidelines Manual* should be checked to determine if a CIF permit is required, and for the definition of what the existing or base conditions are.

203-3.03(02) Bridge-Hydraulics Modeling

The regulatory agencies require the use of computer hydraulic-modeling software to support calculations used in flood modeling. The required modeling program is HEC-RAS. The HEC-RAS procedures are followed as stated in the IDNR manual, *General Guidelines for the Hydrologic-Hydraulic Assessment of Floodplains in Indiana*, or *Floodplain Guidelines*, and the USACE HEC-RAS manuals. The following should be considered in performing a HEC-RAS model.

1. Survey Accuracy. A survey is performed for the purpose of bridge or road design. However, the survey does not always extend far enough up- and downstream to cover the entire reach used in hydraulic-modeling design. It may be necessary to propagate the last cross-section up- and downstream as necessary to extend to the full reach length desired. If available, some county, city, or USGS maps include contours that can be useful in determining the cross-section shape outside the general project survey area. These tend to be most useful in sizing the flood plain. Current aerial photography should be used where current land uses may have changed from the original survey, such as new levees, structures, etc. Other available types of mapping should be discussed with the Office of Hydraulics prior to use. The hydraulic model should have adjusted the survey to the NAVD 88 datum. The *Floodplain Guidelines* Chapters 4 and 5 provide information on survey and mapping requirements.

2. Cross-Sections and Ineffective Flow. The cross-sections should extend far enough up- and downstream to include areas that can affect the water surface as it passes through the bridge of interest. This can include other downstream bridges or structures that can have potential backwater effects to the bridge of interest. The beginning cross-section should be the same for natural, existing, and proposed conditions for the same discharge. The ending cross-section should show a decline in backwater converging back towards the natural water-surface elevation.

   The individual cross-sections should have data points that extend higher than the water-surface elevation at its extents. Extending the cross-sections beyond the water-surface

elevation can affect the scale of the cross-section so that the channel itself is difficult to visualize in the model display. The cross-sections should be chosen at appropriate locations that are perpendicular to the channel. However, the overbank section may have to be manipulated so that two cross-sections do not overlap. If possible, scour holes and large sediment mounds near the bridge should be avoided as cross-section locations. If such a location is necessary, manipulation of the flowline may be necessary to avoid large rises and drops.

See *Floodplain Guidelines* Chapter 8 for more information on modeling. For the appropriate roughness *n* value, see Figure 203-3A.

3. Bridge. In HEC-RAS, a bridge automatically uses the adjacent cross sections in the modeling. It may be necessary to investigate the internal cross-sections to make changes for channel clearing or lowering the channel's *n* value through the bridge. The bridge should be modeled such that is normal to the direction of flow. This can be done manually or by using the skew function.

4. Check-RAS. - Check-RAS is a separate program that can be used in conjunction with HEC-RAS to help determine if errors occurred during the modeling procedure.

203-3.03(03) Scour

Scour is the most common cause of bridge failure. Therefore, potential scour problems should be recognized. The appropriate countermeasures should be used as necessary to improve bridge safety. HEC-18 and HEC-20 are FHWA documents that provide information and appropriate analysis procedure for determining scour. The scour can be computed using hand calculations from HEC-18, or by using the bridge modeling from HEC-RAS.

The types of scour that are used in bridge-hydraulics calculations include contraction, pier or local, and abutment. Only contraction and pier scour should be computed. Abutment scour is accounted for, due to riprap protection required at each abutment. Abutment scour has been shown to be overestimated.

For a new or replacement bridge, the scour should be computed for both the 1% annual EP and 0.2% annual EP. The 0.2% annual EP discharge should not be computed using the traditional 1.7 multiplier of the 1% annual EP discharge method, as this has typically overestimated scour and increased foundation costs. The 0.2% annual EP discharge should be determined using the same methods described in Chapter 202 as used to determine other storm events. Scour countermeasures are not required, as all bridge pier piles will be driven below the low-scour elevation. However, the embankment should have appropriately-sized riprap placed on it in a cone shape around the

entire abutment. See Figure 203-3B, Riprap Scour Protection. For a three-sided or box structure, see the INDOT *Standard Drawings* for the location of riprap.

A bridge-rehabilitation project requires only the 1% annual EP to be evaluated. It should be determined if the bridge is potentially scour-critical, based on the determined low-scour elevation and the elevation of the bridge foundation. For a scour-critical bridge, scour countermeasures should be taken as shown in the INDOT *Standard Specifications* and Figure 203-3B. If the bridge is not scour critical, the scour countermeasures should still be identified. The designer should decide whether they should be used or not.

In evaluating a bridge, all indications and locations of scour occurrence should be identified. Bridge-inspection reports should also be checked, along with other historical scour and geomorphology issues. Scour can be occurring though there are no apparent signs, as scour holes can fill in prior to the water level sufficiently dropping to allow inspection. If overtopping occurs before a 1% annual EP event, it is possible that the maximum scour can occur at a lesser event. Therefore, the scour that occurs just before overtopping should be studied.

If the bridge is a single opening with a wide floodplain and the stream has a high probability of meandering, guide banks, or spur dikes, should be used to align the approach flow with the bridge opening and to prevent scour around the abutments. They are usually elliptically shaped with a major-to-minor-axis ratio of 2.5 to 1. Their length can be determined according to HDS-1 procedures. Guide banks, embankments, and abutments should be protected with rock riprap with a filter blanket or other approved revetment.

If possible, clearing of vegetation upstream or downstream of the toe of the embankment slope should be avoided. For more information regarding riprap design and stronger armoring practices, see Section 203-6.0.

The foundation design for the 1% annual EP should include a geotechnical-design-practice safety factor of 2.0 to 3.0. The resulting design should then be checked using a superflood, the 0.2% annual EP, and a geotechnical-design-practice safety factor of at least 1.0. See Chapter 107 for more information.

203-3.03(04) Scour-Hydraulic Modeling Using HEC-RAS

The hydraulic design model should be obtained. A velocity distribution at the bridge should be computed that will determine the maximum velocity that occurs. The velocity distribution should have at least 20 sections in the channel. This distribution is used later in the pier-scour calculations.

1. Contraction-Scour Analysis. Use live-bed calculations. Clear-water calculations should be used for scour just downstream of a dam, overflow structure on a floodplain, or other location where sediment in the stream is minimal.

   Determine which upstream cross-section will be used as the fully-expanded approach section to the bridge for scour analysis. This should be the first section before contraction begins upstream of the bridge. If there is a nearby existing bridge upstream with no road overflow, the most fully-expanded cross-section will be at the intersection of the upstream bridge expansion and the downstream bridge contraction junction; which may not be a fully-expanded section.

   Determine D_{50} from the geotechnical report. If D_{50} is unknown or a geotechnical report does not yet exist at the time of hydraulic modeling, a value of 0.01 mm may be used which will produce the most conservative result. If using HEC-RAS, D_{50} should have a value and it must be at least 0.01 mm. If using a lesser value, HEC-RAS will incorrectly show contraction scour as 0 ft.

   Use the modeling to determine the remaining equation variables. HEC-RAS determines this, or the equations in HEC-18 may be used for manual use.

   Only the contraction scour result from the channel should be used.

2. Pier Local-Scour Analysis. Choose the Maximum V1Y1 method for determining pier scour. The channel can meander and the highest velocity can occur at the face of the pier.

   Use the CSU Equation Method.

   Determine the pier shape and the pier angle with respect to the channel-flow direction. The pier angle, not the bridge skew, is typically 0 deg for a new or replacement bridge. However, due to stream meandering, a bridge to be rehabilitated can have flow approaching the piers at an angle. A pier angle value should be entered or HEC-RAS will not compute pier scour.

   Use the modeling to determine the remaining equation variables. HEC-RAS usually determines this, or the equations in HEC-18 may be used for manual use.

3. Total Scour Analysis. Add the contraction scour and the pier scour for total scour depth. This should be subtracted from the flowline at the bridge to determine low-scour elevation. If analyzing an existing bridge, the foundation of the bridge should be checked against the low-scour elevation to determine if the bridge is scour critical. If an existing bridge foundation is unknown, the bridge is automatically considered scour critical

203-3.03(05) Pressure-Flow Scour

With pressure flow, the local scour depth at a pier or abutment is larger than for free-surface flow with a similar depth and approach velocity. The increase in local scour at a pier subject to pressure flow results from the flow being directed downward toward the bed by the superstructure and by increasing the intensity of the horseshoe vortex. The vertical contraction of the flow is a more significant cause of the increase in scour depth. However, where a bridge becomes submerged, the average velocity under it is reduced due to a combination of additional backwater caused by the bridge superstructure impeding the flow, and a reduction of discharge which must pass under the bridge due to weir flow over the bridge and approach embankments. As a consequence, an increase in local scour due to pressure flow can be offset by a lesser velocity through the bridge opening due to increased backwater, and a reduction in discharge due to overtopping.

In using HEC-RAS in a pressure-flow scenario, the program usually will not determine some variables, such as the average flow depth at the bridge for contraction scour. They should be entered manually.

HEC-RAS can be used to determine the discharge through the bridge and the velocity of approach and depth upstream of the piers where flow impacts the bridge superstructure. These values should be used to calculate local pier scour. Engineering judgment should then be used to determine the appropriate multiplier times the calculated pier-scour depth for the pressure-flow scour depth. This multiplier ranges from 1.0 for a low-approach Froude number Fr = -0.1, to 1.6 for a high-approach Froude number, Fr = 0.6. If the bridge is overtopped, the depth to be used in the pier-scour equations and for computing the Froude number is the depth to the top of the bridge deck or guardrail obstructing the flow. Research sponsored by FHWA has a listed procedure for three separate pressure-flow situations. See FHWA-HRT-09-041 October 2009 for more information on this process.

203-3.04 Determination of Hydraulic- and Scour-Data Parameters

The method used to determine the hydraulic- and scour-data parameters using HEC-RAS is described below. The parameters should be shown for both existing and proposed conditions where applicable.

1. Hydraulic Data.

    a. Drainage Area. The drainage area is the delineated area that drains to the structure in question. See Chapter 202.

b. Q_{100}. The 1% annual EP discharge should be determined using the methods described in Chapter 202.

c. Q_{100} Elevation. This elevation is determined for natural conditions at the downstream face of the bridge. If using HEC-RAS, this can be determined by using interpolated sections between the adjacent bridge sections in natural conditions to the downstream bridge face.

d. Q_{100} Headwater Elevation. This elevation is determined for the proposed conditions at the closest upstream cross section from the bridge. This information is used so that the reviewer can check road-serviceability requirements across the entire floodplain and watershed.

e. Gross Waterway Area Opening Below Q_{100} Elevation. The required area is determined by using the Q_{100} natural water surface elevation at the downstream bridge face. Since this is to be the gross area, the flow-area output from HEC-RAS, which is net area, should include the piers and adjusted flow-area water-surface elevation to the Q_{100} elevation. The gross waterway area should be taken in a direction parallel to the flow.

f. Road-Overflow Area. This is the actual flow area that will go over the road. This is not based on the Q_{100} elevation. It should use the approach-crest elevation along with the road profile to determine the area.

g. Q_{100} Velocity. This is the outlet velocity at the downstream face of the bridge as it exits the structure. This is shown in the HEC-RAS Bridge Output as velocity for the downstream side of the bridge. No other adjustments should be made, and the continuity equation should not be used. The outlet velocity is the average velocity across the whole structure.

h. Minimum Low-Structure Elevation. The low-structure elevation should be taken at the lowest elevation point along the bottom of a beam, slab, or concrete flat section under the bridge. If the structure is an arch, the low-structure elevation is at the top inside of the arch structure.

i. Skew. The bridge skew is offset from the perpendicular to the roadway centerline.

2. Scour Data. Q_{100} and Q_{100} elevation are as described above.

a. Q_{100} Maximum Velocity. The maximum velocity is determined from the highest value of a HEC-RAS velocity distribution that includes at least 20 subsections across the channel. The maximum velocity should be the highest value of both the upstream and downstream bridge sections.

b. Q_{100} Contraction Scour. This is the HEC-RAS-determined contraction scour for the channel only.

c. Q_{100} Total Scour. This is the addition of pier scour and contraction scour, but does not include abutment scour. For multiple piers, use the pier with the highest scour value.

d. Q_{100} Low-Scour Elevation. Subtract the total scour from the flowline elevation at the bridge.

e. Q_{500}. Use the methods described in Chapter 202. Do not use the 1.7 multiplier method. Repeat the scour data parameters for Q_{500}.

f. Flowline Elevation. This is the lowest point in the channel under the downstream face of the bridge.

203-3.05 Documentation [Rev. May 2015]

The following provides an explanation of what is required in the submittal requirements for a hydraulics report as it pertains to bridge-hydraulic analysis. The hydrologic requirements appear in Section 202-4.0.

For standalone scour calculations a Sample Scour Report is available at http://www.in.gov/dot/div/contracts/design/dmforms/, Worksheet 203-3D.

1. Narrative. The narrative should include a discussion of the thought process used for the hydraulics or modeling of the bridge. This should also include special features or conditions that the designer wants the reviewer to consider as a basis for decisions. Historical flooding issues should be discussed.

2. Hydraulics-Summary Table. A tabulated hydraulics and scour-data summary should be provided. This should include the hydraulic parameters listed in Section 203-3.04.

3. Hydraulic-Data Calculations. Computations should be provided to support the data in the hydraulic summary. This can be done by using the output from HEC-RAS with

calculations on it, or a separate sheet. However, general HEC-RAS output sheets that are not related to the calculations should not be submitted since they will already be in the HEC-RAS modeling.

4. Plan Sheet. Provide a plan sheet showing the cross-section locations used in the modeling analysis. Expansion and contraction ineffective-flow-area lines, if using a HEC-RAS method, should be included.

5. Layout Sheet. A layout sheet should be provided showing the bridge geometry. It should include the low-structure, Q_{100}, flowline, ordinary-high-water, and channel-clearing elevations.

6. Site Photos and Aerial Photography. Photos of the site location should be provided that show both up- and downstream views, and an aerial photograph, so that stream roughness values, stream morphology, and structure alignment can be verified.

7. HEC-RAS Analysis. A hydraulic model should be provided in the submittal. The model should be in a single project file. The natural, existing, and proposed plans should be included within the file. By having the plans in one file, the natural, existing, and proposed conditions can be compared next to each other.

8. IDNR Checklist and INDOT-IDNR MOU. If an IDNR Construction in a Floodway Permit is required, an IDNR checklist should be provided. If the structure is replacement in kind, an INDOT-IDNR MOU should be provided. These should also be submitted to the Office of Environmental Services.

9. Check-RAS. This should be used to check for modeling warnings. The warnings should be explained or corrected.

10. Hydraulics Quality-Assurance Checklist. A checklist to document the design procedures, studies, decisions, criteria, calculations, etc., for bridge hydraulics is shown as Figure 203-3C.

203-4.0 PAVEMENT AND STORM DRAINAGE

203-4.01 Introduction

This Section provides guidance regarding storm-drain design and analysis policy. A storm-drainage facility consist of curbs, gutters, storm drains, side ditches or open channels as appropriate, or culverts. The aspects of storm-drain design such as system planning, pavement

drainage, gutter-flow calculations, inlet spacing, pipe sizing, and hydraulic grade line calculations are discussed herein. In addition to INDOT policy, local ordinances and legal constraints should be considered in the final design.

The design of a drainage system should address the needs of the traveling public and as those of the local community through which it passes. The drainage system for a roadway traversing an urbanized region can be more complex. This can be attributed to concentrated development areas and conflicts with existing utilities and drainage systems.

See HEC-22 *Urban Drainage Design Manual*, Chapters 4 and 7, or LTAP *Stormwater Drainage Manual*, Chapter 5 and 7 for more information on storm-drain design.

203-4.02 General Policy

The placement and hydraulic capacity of a storm-drainage facility should be designed to consider damage to adjacent property and to secure as low a degree of risk of traffic interruption due to flooding as is consistent with the importance of the road, the design traffic service requirements, and available funds.

The Rational Method is used for the design of a storm drain. The storm-drain flow method is described in Chapter 202. The specific policies for pavement-drainage-system design and analysis are described in Section 203-4.04.

203-4.03 Design Considerations

203-4.03(01) Corridor Plan

The type of facility determines allowable pavement spread and the amount of impervious area that will be intercepted by the storm drainage system. See Figure 203-4A to determine the allowable spread. If the facility is planned to be expanded as a future project, consideration should be given to designing the storm sewer to handle the future impervious area. Other transportation users can utilize the areas between the curb and edge of travel lane, which can affect the design.

203-4.03(02) Local Issues

INDOT policy is not generally required to be in accordance with local jurisdictional rules or regulations. A local jurisdiction can be more restrictive than INDOT drainage requirements. If so, the local design parameters should be followed as much as practical.

203-4.03(03) Existing Conditions

In considering the storm drain, the existing conditions should be evaluated. Off-site drainage may need to be intercepted by the storm-drain system. This can require earth inlets for drainage that is blocked by the road. Off-site areas drainage onto the roadway can require additional curb inlets and storm-sewer capacity. A large concentrated volume of water can be collected more efficiently in a channel using culvert-type inlets rather than being allowed to flow overland onto the pavement and into the pavement inlets. Existing utilities should be considered in determining the storm-drain location and depth.

203-4.03(04) Downstream Conditions

Where drainage is into an existing system such as a ditch or other storm drain, impacts to the receiving system should be considered. Possible impacts include, but are not limited to, outlet velocity, capacity of receiving system, erosion, finished floor elevations, etc. The outlet structure flow should contain a reasonable outlet velocity and should be protected against scour. See Figure 203-2D for riprap size based on outlet velocity. Downstream flow conditions include the following.

1. If the storm drain outlets into a legal drain, the county surveyor should be contacted to ascertain that the legal drain can handle the additional flow.

2. If the receiving ditch cannot or should not satisfy the necessary capacity requirement, a detention facility, either above or below ground, should be considered. See Section 203-5.0.

3. The outlet invert into a ditch should be as high as possible. If the outlet invert has to be less than 1 ft above the low-flow elevation, high-water analysis of the ditch should be performed to determine the backwater effects into the storm-drain system.

4. FHWA has developed guidelines for determining the backwater effects through the storm-drain system during a higher creek flow. See Figure 203-2G for these requirements. For this situation, a flap gate may be required on the outlet structure.

203-4.03(05) Environmental Issues

Some ditches are considered environmentally sensitive. If draining into a sensitive stream, water-quality improvements can be necessary. A sensitive stream should be identified in the environmental document. The Office of Environmental Services should be contacted if questions arise. Sanitary and storm drainage systems should be separate. A storm drain may be required to tie back into an existing storm-drain system that is a combined sewer. The receiving wastewater-treatment facility should have sufficient capacity for the additional flow, and that all EPA requirements are satisfied.

203-4.03(06) Roadway Drainage

In designing the storm drain, the trunk lines should be placed as shallow as possible while satisfying cover requirements. This will reduce the cost of excavation and increase safety for the construction crew. However, this is not always possible due to utility conflicts, slope requirements, outlet elevations, or other issues. Where there is a slope, the inlets should be placed on the upstream side of a driveway or intersection. Where practical, manholes should be placed outside of the pavement limits. If this is not possible, inlets and manholes should be placed to avoid the wheel path in the roadway mainline, an intersection or a drive. A trunk mainline may be required on each side of the roadway with few laterals, or only a single trunk mainline may be required. Such features are a function of economy but can be controlled by other physical features.

203-4.03(07) Bridge-Deck Drainage

Bridge deck drainage is similar to that for a curbed roadway section. However, it can be less efficient because cross slopes are flatter, parapets collect large amounts of debris, and small drainage inlets or scuppers have a higher potential for clogging due to debris. Bridge-deck construction requires a constant cross slope. Because of the difficulties in providing and maintaining an adequate deck-drainage system, gutter flow from the roadway should be intercepted before it reaches a bridge. Runoff should be collected by means of inlets, although gutter turnouts may be used for a minor flow. The drainage system should prevent water, road salt, or other corrosives from contacting the structural components. Runoff should be handled in compliance with applicable stormwater-quality regulations. Deck drainage can be carried several spans to the bridge end for disposal.

A bridge deck is usually the first segment of a highway to become icy in cold weather. Adequate deck drainage through use of minimum grades and cross slopes is essential to prevent the accumulation and spreading of icy spots. Icing on a bridge deck caused due to frost is difficult to prevent except through surface texture and maintenance practices.

203-4.03(08) Construction and Maintenance

A storm drain is one of the earlier items constructed during the project work. Drainage should be maintained throughout the construction process. The feasibility of construction should be considered in designing the storm-drain system. Safety and costs should be analyzed. If the storm drain is too deep, it may not be able to be constructed without extensive and expensive safety measures. The storm-drain design should satisfy the specified velocity requirements of Section 203-4.04(06), so that less maintenance and cleaning will be required.

1. Compatibility of Drainage Structure and Casting. Figure 203-4B shows which casting may be used with a given type of catch basin, inlet, or manhole. The information shown in the figure is complementary to that shown on the related INDOT *Standard Drawings*. In developing a drainage plan, the designer should refer to the figure to ascertain structure and casting compatibility. If a structure-casting combination other than that permitted in the figure is desired, the Office of Hydraulics should be contacted.

2. Pump Station. A pump station may be required to satisfy the grade requirements. The use of a pump station is not desirable. If the designer is considering the use of a pump station, the Office of Hydraulics should be contacted for approval.

203-4.04 Design Procedure and Criteria

203-4.04(01) Data Collection and Preliminary Sketch

The first step in the design of a storm-drainage system is to collect initial data about the project and site location. This includes knowing the purpose of the project, coordinating with local agencies, and understanding present and future land-use patterns. All possible outlet locations should be determined. Topographical and aerial mapping is helpful at this point in the process. Some cities and counties have detailed mapping information of their areas.

203-4.04(02) Inlet Location

An inlet is required where needed to collect runoff within the design controls specified in Figure 203-4A. An inlet may be necessary where it contributes little to the drainage area. Such a location should be shown on the plans prior to performing computations regarding discharge, water spread, inlet capacity, or run-by. Location examples are as follows:

1. sag point in the gutter grade;
2. upstream of a median break, entrance or exit ramp gore, crosswalk, or street intersection;

3. immediately upstream and downstream of a bridge;
4. immediately upstream of a cross-slope reversal;
5. on a side street at an intersection;
6. at the end of a channel in a cut section;
7. behind a curb, shoulder, or sidewalk to drain a low area; or
8. where necessary to collect snowmelt.

An inlet should not be located in the path where a pedestrian is likely to walk.

203-4.04(03) Inlet Spacing and Spread

An inlet will draw an amount of water off the road and into the storm-drain system. Once the water spreads out a certain distance from the curb onto the road it is desirable to have an inlet added that will reduce this width of water. This width is known as allowable water spread. The spread is determined based on the quantity of water and the geometry of the road as it moves down the gutter, as gutter flow. To determine the amount of water that reaches an inlet, the Rational Method should be used. The minimum time of concentration should be taken as 5 min. The design-storm frequency is determined based on the type of facility. The runoff is typically all impervious unless there is some off-road drainage coming on to the road.

Pavement can have a texture which can affect the friction of the water as it moves across the road. See Figure 203-4C for Manning's *n* value to be used for a street or pavement gutter. The transverse and longitudinal roadway slopes can be determined from the proposed road design.

The desirable minimum longitudinal gutter grade for a curbed pavement is 0.3%. A minimum grade in a curbed section can be maintained in flat terrain by rolling the longitudinal-gutter profile.

The inlet efficiency should be determined to see whether there will be by-pass flow from the inlet that should be added to the next basin for determining the location of the next inlet. Each inlet casting has a unique flow-intercept-efficiency coefficient. Manufacturer's catalogs are a source of this information.

A curved vane grate should be used for a curb-and-gutter application. Figure 203-4D provides a hydraulic capacity chart for a curved vane-grate inlet. The chart is based on a roadway cross section used by the Department. For another inlet type and roadway cross section, the procedure for determining the hydraulic performance is described below. FHWA has developed computer software, HY12, which will analyze the flow in a gutter and the interception capacity of a grate inlet, curb-opening inlet, slotted-drain inlet, or combination inlet on a continuous grade. Both uniform and composite cross-slopes can be analyzed. The program can analyze a curb-opening, slotted-drain, or grate inlet in a sag. Enhanced versions by private vendors have made the program

more user-friendly and have improved its usefulness. Not all INDOT grate configurations have been included in HEC-22. The curved vane grate and the reticuline grate used in the program are similar to the INDOT grates and can be used by inputting the appropriate size. Other grate types, such as INDOT casting type 12, 13, or 14, are not included in HEC-22. However, grate-inlet-capacity curves are available from manufacturers and are recommended for use.

See HEC-22 Chapter 4 for the spread-equation and inlet by-pass calculations.

The methodology for inlet location and calculating spread is done with a computer program or on a computer spreadsheet similar to that shown in Figure 203-4E.

The maximum allowable spread requirement is shown in Figure 203-4A.

203-4.04(04) Pipe Capacity, Non-Pressure Flow

A storm-drainage system should be designed so that the 10% annual EP passes through the system via gravity. Pipe size should not be decreased in a downstream direction regardless of the available pipe gradient because of potential plugging with debris. See HEC-22 Chapter 7 for more information.

203-4.04(05) Hydraulic Gradient, Pressure Flow

The storm-drain network should accommodate the 2% annual EP. The system may operate under pressure, but the hydraulic grade line (HGL) should remain below the rim elevation at each system manhole, inlet, catch basin, or similar structure. At the outlet, the initial HGL will be determined based on the tailwater, which will be either the receiving flow depth or halfway between the crown and critical depth. See HEC-22 Chapter 7 for more information.

203-4.04(06) Minimum Pipe Diameter and Design Velocity [Rev. May 2013]

The minimum pipe diameter is 12 in. A minimum full-flow velocity of 3.0 ft/s is desirable to prevent sedimentation from occurring in the pipe. The recommended maximum storm-sewer velocity is 10.0 ft/s. The minimum Manning's roughness value allowed for pipe is 0.012 (smooth interior pipe). For a situation that cannot be accommodated, the Office of Hydraulics should be contacted.

203-4.04(07) Pipe Cover

Cover is measured from the pipe crown to the bottom of the proposed pavement. The depth of aggregate base under HMA pavement or subbase under concrete pavement is included in the cover dimension. The allowable cover depth can vary based on pipe material. For a circular pipe, the minimum cover should be at least 1 ft., and the maximum cover should be not more than 100 ft. For a deformed pipe with a corrugated interior designation, the minimum cover should be at least 1.5 ft. If these requirements cannot be satisfied, it is necessary to consider other structure types before continuing with the Structure Site Analysis.

The cover depth should be determined for a structure with a precast reinforced-concrete box section.

203-4.04(08) Connecting Inlets and Manholes

A manhole is utilized to provide entry to a continuous underground storm drain for inspection and cleanout. As a cost-saving measure, the storm drain system should connect inlets together as much as possible before connecting to a manhole. The inlets or manholes should be placed within 400 ft of each other so that maintenance can clean them when necessary. The manhole-bottom elevation should match that of the pipe invert leaving the manhole to avoid sedimentation.

The locations where a manhole should be specified are as follows:

1. where two or more storm drains converge;
2. at intermediate points along a tangent section;
3. where the pipe size changes;
4. where an abrupt change in alignment occurs; or
5. where an abrupt change of the grade occurs.

A manhole should not be located in a traffic lane. However, if this is impossible, it should not be in the normal vehicle-wheel path. Where practical, a manhole should be located off the roadway. Figure 203-4F shows the guidelines for a pipe size connection to a particular manhole.

203-4.04(09) Sag Vertical Curve and Flanking Inlets

Two curved vane grates, type 10 or 11, should be installed on one frame casting at the sag point. Each vane grate is positioned to receive water from each upstream direction. A curb box is combined with the grate to provide relief if the grate is plugged with debris. The curb box is ignored in the hydraulic-capacity calculations. A sag grate inlet operates as a weir up to a depth

of about 0.5 ft and as an orifice for a depth greater than 1.5 ft. In a depressed section or underpass where ponding water can be removed only through the storm-drain system, a higher design frequency, 2% annual EP, should be considered to design the storm drain which drains the sag point.

To provide adequate drainage in a sag vertical curve, a minimum slope of 0.3% should be maintained within 50 ft of the level point in the curve. The location of or need for flanking inlets should be based on the design spread, design speed, traffic volume, potential for clogging of the low point inlet, maximum depth of ponding potential at the site, or other considerations that can be peculiar to the site. Typically, the longer the storm drain reach, the greater the need for flanking inlets.

The flanking inlets should be placed so that they will limit spread on a low-grade approach to the level point and act in relief of the sag inlet if it becomes clogged. Figure 203-4G shows the spacing required for depth-at-curb criteria and vertical curve length defined by $K = L/A$, where L is the length of the vertical curve in feet and A is the algebraic percentage difference in approach grades. The INDOT geometrics specify a maximum K value for the design speed, and a maximum K value of 170 for considering drainage on a curbed facility. See HEC-22, Chapter 4.4 for design information.

203-4.04(10) Slotted Drain

A slotted-drain pipe is used at locations as follows:

1. high-side shoulder of a superelevated section;
2. high-side shoulder that slopes toward the traveled way;
3. high-traffic-volume freeway; or
4. roadway that is either curbed or uncurbed.

See HEC-22 Chapter 4.4 for more information on designing a slotted drain.

Snow accumulation adjacent to a concrete barrier on the inside or outside shoulder can present a drainage problem. Therefore, a slotted drain should be used in conjunction with inlet type H-5 or HA-5 as follows:

1. in a tangent section, at every third inlet;
2. on the low side of a superelevated curve, at all inlet sites; or
3. in a sag vertical curve, three inlets, centered on the low point.

See the INDOT *Standard Drawings* for more-detailed information.

1. Slotted Inlet on Grade. A slotted inlet, which uses a vertical riser, is an effective pavement-drainage inlet which has a variety of applications. It can be used on a curbed or uncurbed section, and offers little interference to traffic operations. It can be placed longitudinally in the gutter or transversely to the gutter. A slotted inlet should be connected into an inlet structure so that it will be accessible to maintenance forces upon plugging or freezing.

   a. Longitudinal Placement. Flow interception by a slotted-drain pipe and a curb-opening inlet is similar in that each is a side weir, and the flow is subjected to lateral acceleration due to the cross slope of the pavement. A slotted inlet can have economic advantages and can be useful in a widening or safety project where right of way is narrow and existing inlet capacity should be supplemented. A curb opening inlet can be eliminated as a result of utilizing a slotted inlet. The standard slotted-drain-pipe slot width is 1¾ in., and the length is 20 ft. The same equations that are used for a curb-opening inlet are also used for a slotted inlet. See HEC 22 Chapter 4.4.4 for more-specific information.

   b. Transverse Placement of Slotted Vane Drain. At a drive where it is desirable to capture virtually all of the flow, e.g., a drive sloped toward the roadway, a slotted-vane drain can be installed in conjunction with a grate inlet. Tests have indicated that, if the slotted-vane drain is installed perpendicular to the flow, it will capture approximately 1.6 ft^3/s per running foot of drain on a longitudinal slope less than 6%. Capacity curves are available from the manufacturers. The ideal installation utilizes a grate inlet to capture the flow in the gutter and the slotted-vane drain to collect the flow extending into the shoulder. A slotted-vane drain is shaped and rounded to increase inlet efficiency and should not be confused with a vertical-riser-type slotted inlet, i.e., a slotted-drain pipe.

2. Slotted Inlet in a Sag Location. Except adjacent to a concrete barrier, the use of a slotted-drain inlet in a sag configuration is discouraged because of the propensity of such an inlet to collect debris. However, it may be used where it is desirable to supplement an existing low-point inlet with the use of a slotted drain. A slotted inlet in a sag location performs as a weir to a depth of about 0.2 ft, dependent on slot width and length. At a depth greater than about 0.4 ft, it performs as an orifice. Between these depths, flow is in a transition stage.

203-4.04(11) Underdrains

Section 52-10.0 provides the procedure for the design of underdrains.

203-4.04(12) Roadside or Median Ditch

A roadside ditch is used with an uncurbed roadway section to convey runoff from the highway pavement and from areas which drain toward the highway. Due to right-of-way limitations, a roadside ditch should not be used on an urban arterial. It can be used in a cut section, depressed section, or other location where sufficient right of way is available, and drives or intersections are infrequent. Where practical, the flow from an area draining toward a curbed highway pavement should be intercepted behind the curb to prevent flow onto the pavement..

A median area or inside shoulder should be sloped to a center swale to prevent drainage from the median area from flowing across the pavement. This should be considered for a high-speed facility, or for one with more than two lanes of traffic in each direction. Where a median barrier is used, or on a horizontal curve with associated superelevations, it is necessary to provide inlets and connecting storm drains to collect the water which accumulates against the barrier. A slotted drain adjacent to the median barrier or weep holes in the barrier can also be used for this purpose.

Section 203-6.0 discusses the hydraulic design of a channel.

A median or roadside ditch can be drained by means of drop inlets similar to those used for pavement drainage, pipe culverts under one roadway, or cross-drainage culverts which are not continuous across the median. The type P inlet is used for median ditch drainage. See the INDOT *Standard Drawings* for inlet details. See HEC-22 Chapter 4 for additional information regarding design procedures.

203-4.04(13) Curb and Gutter

A curb at the outside edge of a pavement is common for a low-speed, urban highway facility. It contains the surface runoff within the roadway and away from adjacent properties, prevents erosion, provides pavement delineation, and enables the orderly development of property adjacent to the roadway. See Section 45-1.05 for a discussion on curb types and usage.

A curb and gutter forms a triangular channel that can be an efficient hydraulic conveyance facility to convey runoff of a lesser magnitude than the design flow without interruption to traffic. If a design-storm flow occurs, there is a spread or widening of the conveyed water surface and the water spreads to include not only the gutter width, but also parking lanes or shoulders and portions of the traveled surface.

Where practical, runoff should be intercepted from a cut slope or other area draining toward the roadway before it reaches it. A shallow swale section at the edge of the roadway pavement or

shoulder offers advantages over a curbed section where curbs are not needed for traffic control. The advantages include a lesser hazard to traffic than a near-vertical curb, and hydraulic capacity that is not dependent on spread on the pavement.

203-4.04(14) Shoulder Gutter or Curb

A shoulder gutter or sloping curb may be appropriate to protect a fill slope from erosion caused due to water from the roadway pavement. It should be considered for a 2:1 fill slope higher than 20 ft. It should also be considered for a 3:1 fill slope higher than 20 ft if the roadway grade is steeper than 2%. Where permanent vegetation cannot be established, the height criterion should be reduced to 10 ft regardless of the grade. Inspection of the existing and proposed site conditions and contact with maintenance and construction personnel should be made by the designer to determine if vegetation will survive.

A shoulder gutter or curb, or a riprap turnout should be utilized at a bridge end where concentrated flow from the bridge deck will otherwise flow down the fill slope. The section of gutter should be long enough to include the transitions. A shoulder gutter or riprap turnout is not required on the high side of a superelevated section or adjacent to a barrier wall on a high fill.

203-4.04(15) Impact Attenuator

The location of an impact-attenuator system should be reviewed to determine the need for a drainage structure. It is necessary to have a clear or unobstructed opening as traffic approaches the point of impact to allow a vehicle to impact the system head-on. If the impact attenuator is placed where superelevation or other grade separation occurs, a grate inlet or a slotted drain can be needed to prevent water from flowing through the clear opening and crossing the highway lanes or ramp lanes. A curb, curb-type structure, or swale cannot be used to direct water across the clear opening because vehicular vaulting can occur once the attenuator system is impacted.

203-4.04(16) Bridge-Deck Drainage

HEC-21 should be referenced for bridge-deck drainage design procedure. The longitudinal slope of the bridge deck should be steep enough to satisfy the gutter-spread requirements without the need for gutter inlets on the structure itself. However, this is not always feasible, and runoff capture may be necessary. All surface drainage should be intercepted before it enters the bridge section. If inlets are required on the structure, the criteria to be implemented are as follows.

1. For a structure length of less than 170 ft and on grade, or a structure length of less than 250 ft and on a crest vertical curve, inlets are not required. However, hydraulic calculations for deck drains are required.

2. The gutter spread should be checked to ensure compliance with the design criteria described in Figure 203-4A.

3. The desirable minimum longitudinal slope for bridge-deck drainage is 0.5%. A flatter grade will be tolerated where it is not physically or economically desirable to satisfy this criterion.

4. Fifty percent of the inlets on the bridge should be assumed to be plugged. The end collectors should be sized accordingly.

5. Considering hydraulics, inlets should be large and widely separated.

6. If deck drainage is required at the ends of the grade-separation structure, deck drains should discharge into inlets located in the berm or on the slopewall under the bridge as shown on the INDOT *Standard Drawings*.

7. A flat grade or sag vertical curve is not allowed on a bridge on a new alignment. Vertical-curve criteria for an existing structure should be followed for inlet placement. Because a grate inlet at a sag location is prone to clogging, a safety factor of 2.0 for the inlet design size should be used if no alternative design is feasible.

8. Allowable inlet types should be the following:

   a. Grate Type A. This grate fits onto roadway drain type SQ. It is a parallel bar grate and the most hydraulically-efficient grate in use. The grate is 19 in. square. Because the width of the openings is 1 in., the grate is not considered bicycle-safe if placed with the bars parallel to the direction of traffic. However, it is feasible to use this grate where bicycle traffic is allowed on the bridge if the bars are placed perpendicular to the direction of travel. The perpendicular arrangement can substantially reduce the hydraulic capacity of the grate. The outlet fitting is a circular pipe with diameter of 6 in.

   b. Grate Type D. This grate fits onto roadway drain type OS. This is a type C grate with parallel bars but has two transverse bars which prevent bicycle wheels from dropping into the inlet. Therefore, it is considered bicycle-safe. The transverse bars reduce the hydraulic capacity of the grate. The grate dimensions are width of 19 in. by length of 20 in. The outlet fitting is a circular pipe with diameter of 6 in.

   c. Slab-Bridge Floor Drain. This drain should be used on a reinforced-concrete slab bridge. The drain is a PVC pipe, diameter of 6 in., set into the deck. This drain has limited hydraulic capacity. Therefore, the spacing will be much closer than that for grate type A or D. The standard spacing is approximately 72 in. A ½-in. depression, which extends 1 ft transversely from the face of the curb, slightly increases the capacity.

   d. Curved-Vane Grate. This grate should be used on a curbed roadway where the inlets are located off the bridge deck.

   e. Concrete-Barrier-Railing Scupper. This device should be used only on a local public agency bridge with concrete-barrier railings.

The following applies to the design of the underdeck drainage system.

1. A bridge-drainage pipe beneath the deck is sized larger than necessary for hydraulic purposes to facilitate maintenance. The minimum pipe diameter is 6 in. The inlet conditions will control the flow capacity. Entrances, bends, and junctions in the underdeck pipe system provide opportunities for debris to snag and collect. Smooth transitions and smooth interior surfaces should be provided. Sharp bends, corner joints, or bevel joints should be avoided.

2. The recommended minimum velocity for storm drainage should be used.

3. The INDOT *Standard Drawings* show details for bridge deck drains (castings and grates) and drainage casting extensions. Acceptable materials for castings and grates, drain casting extensions and enclosed bridge deck drainage systems are included in the *Standard Specifications* and should not be shown on the plans.

4. Figure 203-4H, Typical Floor Drain Sections, illustrates two alternatives to drains. Its detail (a) shows a traditional arrangement including a short overhang and a steel beam, which permits the drain pipe to be located internally with reference to the external beam. Its detail (b) shows another arrangement including a large overhang and a bulb-tee beam, which locates the drain pipe to the outside. This is aesthetically less pleasing, therefore emphasizing the desirability of keeping the number of drains to a minimum.

5. A drainage casting should be positioned such that the outlet pipe is located inside the exterior beam, if practical. See detail (a). If it cannot be located as such, the casting type and position should be selected to locate the drainage pipe as close as practical to the exterior beam. The plans should show the drain location, positioning, and attachment details.

6. The pipe-conveyance system should not extend below the superstructure until the outfall. The minimum desirable slope is 1% for a longitudinal pipe between drains or from a drain to the point of discharge.

7. An open deck drain should not be located over a roadway, sidewalk, or railroad. If a drain is to be located in one of these areas, a closed drainage system should be provided.

The following applies to free-fall, where used beneath a bridge.

1. The downspout should be extended 6 in. below the beam soffit. The downspout should be placed approximately 10 ft from the face of a substructure unit, unless a closed drainage system is to be used. A downspout should not interfere with the required horizontal or vertical clearances. A pipe system designed to bring water down to ground level can become clogged with debris and ice and should only be used as the last option.

2. A downspout should not discharge water where such water can be windblown and can flow down a column or pier.

3. Water should not be discharged openly over a traveled vehicular, railroad, or pedestrian way, unpaved embankment, or unprotected ground where it can cause erosion or undermine a structural element. An energy dissipator or riprap should be provided to prevent erosion.

4. If a free fall is less than 25 ft, riprap or a splash pad will be required to prevent erosion.

A cleanout for maintenance access should be provided at key points within the system to facilitate the removal of obstructions. A downspout should be located so that a maintenance crew can access it from underneath the bridge and preferably from the ground. The most convenient arrangement should be made, as a cleanout that is inaccessible or difficult to reach will not be cleaned.

203-4.04(17) Storm-Drainage-Agreement Policy

A storm-drainage agreement is required if a new or reconstructed INDOT drainage facility is designed to accommodate stormwater from a sewer controlled by an LPA. This is applicable regardless of whether the shared drainage facility is constructed within or outside of INDOT right of way.

Where INDOT constructs a drainage facility outside its right-of-way limits to provide adequate drainage for a highway, I.C. 8-23-6-2 allows INDOT to assess a proportionate share of the cost of constructing the drainage facility outside the right of way to beneficiaries of the drainage structure. Therefore, a municipality or other beneficiary that connects to an INDOT drainage structure outside INDOT right-of-way limits can be assessed a share of the cost of the drainage structure in proportion to the amount of drainage discharged. The proportionate share is calculated as follows:

$$A_B = C_F \left(\frac{Q_{OR}}{Q_T}\right) \qquad \text{[Equation 203-4.1]}$$

Where A_B = Amount of assessment to beneficiary
C_F = Cost of drainage facility
Q_{OR} = Discharge from storm sewer draining from outside INDOT R/W
Q_T = Total discharge of drainage facility

The remainder of the cost will be paid by INDOT.

By common law, INDOT also has the authority to seek a contribution from the LPA if stormwater from outside the INDOT right of way discharges into a drainage facility within the INDOT right of way. For example, if a municipality wants to make a direct discharge into an INDOT trunkline storm drain, INDOT's policy will be to request a storm-drainage agreement for the trunkline-sewer construction. The proportionate share will also be determined from Equation 203-4.1. If the discharge is in the form of sheet flow onto INDOT right of way, INDOT will not seek a contribution from the municipality involved.

If a particular situation involving sheet flow onto INDOT right of way is increased from existing conditions, the LPA should agree to the necessary local contribution as a condition for initiating

the State highway improvement. Such an agreement cannot be forced upon an LPA, but must be pre-arranged through negotiations between the LPA and the Planning Division or Office of Environmental Services. However, this can occur as late as the design phase.

A situation may arise if INDOT storm-sewer construction results in a request for stormwater detention or a county assessment for the reconstruction of a regulated drain. If the situation also involves INDOT conveying city or town stormwater, INDOT should seek a storm-sewer cost-sharing contribution from the city or town. The procedure for determining the appropriate contribution by the city or town will be as described above. INDOT cannot cite I.C. 8-23-6-2 as authority to pass on a portion of a county drainage assessment to the city or town. Only a county drainage board has the authority to levy a drainage assessment on a municipality or private-property owner if a regulated drain is involved.

A county drainage assessment does not require a formal agreement to be legally binding on INDOT. However, if an assessment includes a monetary contribution which relieves INDOT from providing stormwater detention mandated by the county, the conditions of the assessment should be formalized in a storm-drainage agreement.

The need for a storm-drainage agreement should be identified during the preliminary-plans development. Information necessary for the preparation of the formal agreement should be coordinated with the municipality prior to INDOT design approval. The preliminary cost estimate of the trunkline sewer and the exact ratio to be used in determining the municipality's share should be verbally agreed to with the municipality. The ratio may be based on the sewer's cross-sectional area if the discharge of the municipality's storm sewer cannot be reasonably determined. The municipality should be notified in writing of the approximate cost of its share so that it can arrange financing.

After design approval, the formal storm-drainage agreement will be written to bind the LPA and the State. The Legal Services Division will prepare this document. The agreement must be signed by all parties concerned before the project may be scheduled for a letting.

203-4.04(18) Computer Programs

INDOT does not limit the designer to particular software design programs. However, the designer should provide output in a spreadsheet format as explained in Section 203-4.05.

203-4.05 Documentation

The following provides an explanation of the submittal requirements for an INDOT hydraulics report as it pertains to storm-drain-hydraulics analysis. The hydrologic requirements are described in Section 202-4.02.

203-4.05(01) Spread Calculations for Inlet Spacing

A tabulated summary of spread calculations for inlet spacing should be provided as shown in Figure 203-4E. Computer software programs may be used for preparation of solutions. However, the results should still be summarized and referenced in the accepted tabular form.

203-4.05(02) Storm-Sewer Capacity

A storm sewer should be designed to carry the runoff from a 10% annual EP through the system via gravity. Computer-software methods are available to the user to determine the capacity of a storm-sewer system. The results from an electronic or manual method should be provided in an accepted tabular method as shown in Figure 203-4 I.

203-4.05(03) Hydraulic-Grade-Line Check

The final storm-sewer design should be checked to determine its adequacy by analysis using a 2% annual EP through the entire system of the hydraulic gradient. The gradient line should not exceed the elevation of an opening into the system. A tabular summary or plotted profile should be provided in the hydraulics-report submittal.

203-4.05(04) Plan and Profile

Road plans for a storm-drain project should be submitted so that the appropriate inlet and storm drain pipe locations can be identified. The plan view should be simplified to show the pipe type, slope, and size; structure identifier, road grade, and other information necessary to evaluate the storm-drain system. The plans structure numbers should match the computer and tabular results in the report submittal. All discrepancies should be addressed prior to report submittal.

203-4.05(05) Additional Information

Other information that the designer deems necessary toward validation of the design should be provided in the hydraulics report. Non-traditional methodology requires the approval of the Office of Hydraulics manager.

203-5.0 STORMWATER MANAGEMENT AND DETENTION

203-5.01 Introduction

The traditional design of a storm-drainage system has been to collect and convey storm runoff as rapidly as possible to a suitable location where it can be discharged. However, the impact of such a traditional storm-drainage design has not always been favorable. Rapidly conveying stormwater can cause environmental impacts to karst topography and wetlands downstream, overwhelm limited outlet capacities, and flood downstream properties, especially where the amount of impervious area is increased as part of a roadway project. To reduce these impacts, various forms of stormwater management have been developed, for an open-system or closed-system facility, as described below.

203-5.02 General Policy

203-5.02(01) Reasons for Storage

Controlling the quantity of stormwater release using a storage facility can provide the potential benefits as follows:

1. prevention or reduction of peak runoff rate increase;
2. mitigation of downstream drainage-capacity problems;
3. reduction or elimination of the need for downstream outfall improvements; and
4. protection of environmentally-sensitive areas, such as karst topography.

203-5.02(02) Downstream Conditions

Storage can be developed in a depressed area in a parking lot, road embankment, freeway interchange, or a small lake, pond, or depression. The utility of a storage facility depends on the amount of storage, its location within the system, and its operational characteristics. An analysis of such a storage facility should consist of comparing the design flow at a point or points downstream of the proposed storage site, with or without storage. Other flows in excess of the

design flow that can be expected to pass through the storage facility may be required in the analysis, i.e., 1% annual EP flood. The design criteria for a storage facility should include the following:

1. release rate;
2. storage volume;
3. grading and depth requirements;
4. outlet works; and
5. location.

At a minimum, a storage facility should be designed to detain the 1% annual EP, post-development peak runoff rate, and release it at the 10% annual EP, pre-developed peak runoff rate. An emergency overflow capable of accommodating the 1% annual EP post-development discharge may be required.

203-5.02(03) Local Jurisdictional Requirements

A local jurisdiction can be more restrictive than INDOT drainage requirements. INDOT requirements need not be in accordance with local jurisdictional rules and regulations. However, the local design parameters should be followed as much as practical.

203-5.03 Design Considerations

A pump station may be required to outlet from an infiltration/detention facility. The use of a pump station to outlet a facility is not desirable. If a pump station is being considered, the Office of Hydraulics should be contacted for approval.

Dam safety should be considered for a berm or embankment created as part of a detention facility. An embankment should not be subject to IDNR regulation and inspection requirements. Per the Indiana Code, IDNR has jurisdiction over all structures, except where the embankment is lower than 20 ft, the contributing drainage area is less than 1 sq mi, or the storage volume behind the structure is less than 100 ac-ft. For more information, see *Indiana Code* 14-27-7.5: Regulation of Dams.

203-5.03(01) Detention Pond

A detention pond is designed to reduce the peak discharge and detain runoff only for a specific duration. A detention basin should have a positive outlet that empties all runoff between storms.

The excavation of a detention pond can extend below the water table or outlet level where the bottom is sealed due to sedimentation. This is a detention pond or wet-bottom detention basin. The detention pond also has a positive outlet and releases all temporary storage.

A dry-bottom detention facility should be used. A detention basin will require additional right of way. The basin will require a certain amount of space, and it should be outside the clear-zone for safety purposes. The pond location and outlet should be considered, especially for flood routing. The overflow location should avoid impacting nearby property and the roadway.

203-5.03(02) Retention Pond

A retention pond retains runoff for an indefinite time and has no positive outlet. Runoff is removed only by means of infiltration through a permeable bottom or by means of evaporation. A retention pond or lake is an example of a retention facility. A retention pond is designed to drain into the groundwater table.

Soil characteristics are the primary concern in designing a retention pond. A geotechnical report should be obtained from the Office of Geotechnical Services, county surveyor's office, etc, to determine the infiltration capacity of the substratum.

A retention pond will require additional right of way. It should be located outside the clear-zone for safety purposes.

203-5.03(03) Roadside-Ditch Detention

A roadside ditch detention system takes advantage of the additional capacity of the roadside and median ditches created by the clear-zone requirements. A roadside ditch detains runoff from the roadway and discharges it at a restricted rate to a positive outlet.

A roadside ditch is the least expensive open-detention system, since it does not require additional right of way or significant additional maintenance. Since the ditch is within the right of way, safety considerations and roadway serviceability should be evaluated.

203-5.03(04) Underground Storage

Underground detention is best suited to an urbanized area where right of way and available land are constrained. It is desirable for where an underground storage structure is to be located outside the pavement limits. Coordination with local utilities is required. Conflicts should be minimized. Clearances should be observed between stormwater and other systems such as drinking water and sanitary sewers. In considering underground detention, the native soil should be determined to ensure constructability. All inline detention should have a positive grade to minimize sedimentation. Access should be provided for cleaning of the underground facility. The grade should be set to avoid the need for a pump station if possible.

The types of underground detention include underground storage, inline detention, parallel storage systems, oversize storm-sewer system, and infiltration trench. Underground storage can be built as one single unit with one inlet and one outlet, under a large area such as a parking lot. It can also be built as a pipe network or conduit system with multiple inlets and only one outlet, under a large area such as a parking lot. Inline detention replaces part of a storm-sewer system with a larger structure near the outlet to detain water within the system. A parallel storage system runs parallel to the existing storm-sewer system to provide additional storage. An oversize storm-sewer system increases the pipe sizes as needed in parts of the storm sewer to add storage to the entire system. An infiltration trench functions like a roadway underdrain, but it can be used only in sandy soil, where the infiltration rate is high.

203-5.03(05) Outlet Conditions

An outlet work can take the form of combinations of a drop inlet, pipe, weir, or orifice. An outlet work selected for a storage facility includes a principal spillway or an emergency overflow. It should be able to accomplish the design functions of the facility.

A slotted-riser pipe should not be used due to clogging problems. A curb opening can be used for parking-lot storage. The principal spillway is intended to convey the design storm without allowing flow to enter an emergency outlet.

An emergency spillway is an outlet provided to allow excess water to exit the pond once the design storm is exceeded. Usually in the shape of a weir, the emergency outlet should be located so that the excess stormwater flows to an adequate outlet and does not damage nearby property. An emergency spillway should be included in a storage-facility design if possible. However, a viable emergency spillway location may not exist.

203-5.03(06) Maintenance

To ensure acceptable performance and function, a storage facility that requires extensive maintenance is discouraged. The maintenance problems that are typical of a detention facility are as follows:

1. weed growth;
2. grass and vegetation maintenance;
3. bank deterioration;
4. standing water or soggy surface;
5. mosquito control;
6. blockage of outlet structures;
7. litter accumulation; or
8. maintenance of fences and perimeter plantings.

The design should focus on the elimination or reduction of maintenance requirements by addressing the potential for problems as follows:

1. Both weed growth and grass maintenance can be addressed by constructing side slopes that can be maintained using available power-driven equipment, such as a tractor mower.
2. Bank deterioration can be controlled with protective lining or by limiting bank slopes.
3. Standing water or soggy surfaces can be eliminated by means of sloping the basin bottom toward the outlet, or by means of constructing a low-flow pilot channel across the basin bottom, from the inlet to the outlet.
4. Once the problems listed above are addressed, mosquito control will not be a major problem.
5. An outlet structure should be selected to minimize the possibility of blockage. A pipe of diameter of less than 6 in. tends to block easily and should be avoided.
6. The facility should be located for easy access where the maintenance associated with litter and damage to fences or perimeter plantings can be conducted regularly.

Routine maintenance activities include an annual inspection, preferably during wet weather, and mowing, as required.

203-5.03(07) Safety Issues

Ponding of water for a significant period of time, at a relatively shallow depth, can introduce an additional risk factor for property damage, personal injury, or loss of life. Safety considerations

include reducing the chance of drowning by fencing the basin, reducing the maximum depth, or including ledges or mild slopes to prevent a person from falling in and to facilitate his or her escape from the basin. A storage facility in a location that is easily accessible to the public should be provided with fencing adequate to prevent entry onto the site by unauthorized persons. A storage facility located adjacent to a roadway should be provided with an adequate clear zone to minimize the accidental entry of an errant vehicle.

Protective treatment is required to prevent entry to a facility that poses a hazard to all persons. Fences and signs are required for a detention or retention pondwith a locked gate to allow for maintenance access.

Where a storage facility is located near a roadway, the road should be provided with an adequate clear zone. The maximum operating-pool depth is limited to 5 ft unless otherwise approved by the Office of Hydraulics.

203-5.04 Design Procedure

A storage facility will require an inflow rate and an outflow rate to determine the necessary storage volume.

The amount of water flowing into the storage facility should be determined. This inflow rate is the post-developed 1% annual EP. However, an additional smaller inflow rate should be considered, if a stricter local ordinance is being followed. The outflow rate should then be determined. The outflow rate is the pre-developed 10% annual EP. However, additional smaller outflow rate should be considered, if a stricter local ordinance is being followed.

The required storage volume should be calculated, based on the inflow and outflow rates, and storm duration. If the watershed draining into a storage facility is greater than 2 ac, the design should be based on reservoir-routing methods which develop hydrographs for both inflow and outflow. WinTR-20 and HEC-HMS are available public-domain hydrographic programs. A basin regulating less than 2 ac can be analyzed using the Rational Method to create a triangular hydrograph.

203-5.04(01) Detention Pond

For a detention pond, a minimum freeboard of 1 ft above the 1% annual EP storm highwater elevation should be provided. Other considerations in setting the depth include flood-elevation requirements, public safety, land availability, land value, present and future land use, water-table fluctuations, soil characteristics, maintenance requirements, and required freeboard.

The primary outlet should be designed to drain the entire detention volume within 72 h. A restrictor plate should not be used. See the INDOT *Standard Drawings*.

An emergency overflow structure should also be added. The emergency overflow structure should be placed in a location that will accept the extra flow. This may or may not outlet to the design outfall. Usually, the emergency overflow structure takes the shape of a weir.

The area above the detention pond's normal high-water elevation should be sloped towards the pond. The bottom area of the pond should be graded toward the outlet to prevent standing water conditions. A low-flow or pilot channel constructed across the facility bottom from the inlet to the outlet should be used to convey low flow. See HEC-22, Chapter 8 for example problems and more information.

203-5.04(02) Retention Pond

The inflow rate is calculated using the Rational Method, regardless of the size of the drainage area. Since the pond is retaining all of the runoff from the 1% annual EP, the outflow rate is almost negligible, because infiltration and evaporation are the only available mechanisms for drainage. To determine the infiltration rate, soil borings should be obtained to ensure accurate calculations.

A retention pond also requires an emergency spillway. The emergency spillway should overflow to an acceptable outlet. The pond should be sized to allow for 1 ft of freeboard below the emergency spillway. If an acceptable emergency overflow outlet is not available, the pond should be sized for 1.5 times the total volume required, plus 1 ft of freeboard.

The construction of a storage facility can require excavation or placement of an earthen embankment to obtain sufficient storage volume. The embankment should be of less than 6.5 ft height. A vegetated embankment should not be steeper than 3H:1V. A riprap-protected embankment should not be steeper than 2H:1V. An excavated storage facility should not have an operating design-pool depth of greater than 5 ft unless approved by the Office of Hydraulics.

203-5.04(03) Roadside-Ditch Detention

A detention pond detains water from the entire drainage area. A roadside ditch detains water only from additional pavement being added during construction. However, the methodology for determining that volume remains the same. To detain the water in a roadside ditch, a berm should be built upstream of the stream receiving the flow from the ditch. The outlet structure diameter should not be smaller than 6 in. to prevent clogging. The berm should be constructed with an

overflow weir for a storm event that exceeds the design storm. For more information on emergency overflow design, see HEC-22, Chapter 8. The capacity of the outfall may not allow for a normal 1% annual EP inflow and 10% annual EP outflow situation. The release rate should be considered, since the roadside ditch can be outletting upstream of existing structures.

203-5.04(04) Oversized Storm Sewer and Inline Detention

An oversized storm-sewer system upsizes the pipes near the outlet of the system to provide extra capacity. An oversized storm-sewer system uses larger round or deformed pipes to provide the extra capacity, while inline detention uses vaults or boxes to provide the extra capacity.

An oversized storm sewer or inline detention should be designed in accordance with Section 203-4.0 for inlet spacing, water-spread calculations, trunk-line placement, and outlet tailwater conditions. However, detention-routing calculations should be performed to ensure that a sufficient amount of water is being detained. Gravity flow should be maintained for the 10% annual EP. The 2% annual EP hydraulic-grade line should remain below the structure top casting elevation. If local detention requirements require the 1% annual EP to be detained, another hydraulic-grade-line check should be made, to ensure that the hydraulic-grade line remains below the structure top casting elevation at the 1% annual EP. Since the velocity through the oversized section is likely to be lower than the suggested minimum velocity, sedimentation is a potential problem. Manholes should be oversized and placed more frequently through the oversized section, to assist maintenance personnel in removing sediment from the storm-sewer system.

Since inline detention is usually present near the outlet of the storm-sewer system, an emergency overflow structure should be placed in the underground storage vault. This consists of a pipe placed in the upper corner of the storage vault. A pipe of diameter of at least 6 in. should be used to prevent the emergency overflow structure from clogging.

203-5.04(05) Infiltration Trench

An infiltration trench is similar to anretention pond, except it is long and narrow and may work within the right-of-way. An infiltration trench is lined with geotextiles and backfilled with aggregate. The Rational Method should be used to calculate the inflow rate. The outflow rate will then be determined based on the infiltration capacity of the soil. Only highly pervious soils should be considered. The length of the system will depend on the volume required, given the inflow and outflow rates. Only the volume of the pipe should be considered for storage. The volume of the voids available in the backfilled trench should be ignored, to provide a factor of safety. Larger pipes should be used, to allow for maintenance. An infiltration trench should be constructed in

accordance with Section 203-4.0. For additional information, see HEC-22, Chapter 8 or Chapter 104.

203-5.05 Pump Station

A pump station requires electricity as well as regular maintenance for proper function. It requires accessibility, monitoring, has limited capacity, and can be expensive. During a large storm event, it can be prone to flooding and failure. For these reasons, use of a pump station is discouraged by INDOT. However, because of topography or geometrics, it may become necessary. If so, the Office of Hydraulics should be contacted and the design guidelines for a pump station shown in HEC-24 should be followed.

203-5.06 Documentation

The information is required for a storage-facility submittal is as follows:

1. project background, including existing and proposed structure;
2. summary of hydraulics design and assumptions, including design criteria;
3. USGS topographic map, or county 2 ft contour lines, and aerial map of the project site to determine the drainage area for the storage design;
4. Hydrology, depending on methods used, IDNR discharge letter if required, coordinated discharges, FIS information, gaged sites or TR-55 and hydrograph methodologies. See Section 203-2.0;
5. computation of the inflow hydrograph;
6. computation of the outflow hydrograph or the restricted outflow according to the pertinent ordinance;
7. summary-performance table for the storage system used to determine the maximum storage volume and the maximum water surface elevation, and to verify the release rate relative to the INDOT, city or town, or county regulation. See Figure 203-5A;
8. computation of the outflow-rating curve, or stage-storage-discharge relationship;
9. plan sheet showing the geometric shape of the detention including the maximum water surface elevation inside the pond, the freeboard, and the emergency spillway if applicable; and
10. an appendix including the calculation and computer-program input and output data used to determine the data shown on the summary-performance table.

203-6.0 CHANNEL OR DITCH

203-6.01 Introduction

An open channel is a natural or constructed conveyance for water in which the water surface is exposed to the atmosphere and the gravity-force component in the direction of motion is the driving force.

The types of open channels related to a transportation facility are stream channel, or artificial channel or ditch.

The principles of open-channel-flow hydraulics are applicable to each drainage facility including a culvert or a storm drain.

A stream channel has the properties as follows:

1. a natural channel with its size and shape determined by means of natural forces;
2. compound in cross section with a main channel for conveying low flow and a floodplain to transport flood flow, and
3. shaped geomorphologically due to the long-term history of sediment load and water discharge which it experiences.

An artificial channel can be a roadside channel, interceptor ditch, or drainage ditch which can be a constructed channel with regular geometric cross section, and is unlined or lined with artificial or natural material to protect against erosion.

Although the principles of open-channel flow are the same regardless of the channel type, a stream channel and an artificial channel, primarily a roadside channel, will be addressed separately herein.

203-6.02 General Policy

203-6.02(01) Significance

Channel analysis is necessary for the design of a transportation drainage system to assess the following:

1. potential flooding caused by changes in water-surface profile;
2. disturbance of the river system upstream or downstream of the highway right of way;
3. changes in lateral flow distribution;
4. changes in velocity or direction of flow;
5. need for conveyance and disposal of excess runoff; and
6. need for channel lining to prevent erosion.

203-6.02(02) Design

Hydraulic design associated with a natural channel or side ditch is a process which selects and evaluates alternatives according to established criteria. These criteria are the standards established to ensure that a highway facility satisfies its intended purpose without endangering the structural integrity of the facility itself and without undue adverse effects on the environment or the public welfare.

203-6.02(03) Federal Policy

The federal policies which apply are as follows.

1. Channel design, or design of a highway facility that impacts a channel, should satisfy the FHWA policies which are applicable to floodplain management if federal funding is involved.

2. FEMA floodway regulations and USACE wetland restrictions for permits should be satisfied.

3. NEPA regulations including the MOU for karst areas or other environmental MOU.

203-6.02(04) INDOT Policy

The INDOT policies which apply are as follows.

1. Coordination with other federal, State, or local agencies concerned with water-resources planning should have high priority in the planning of a highway facility.
2. The safety of the general public should be a consideration in selection of the cross-sectional geometry of an artificial drainage channel.
3. The design of an artificial drainage channel or other facility should consider the frequency and type of maintenance expected, and should make allowance for the access of maintenance equipment.
4. A stable channel is the goal for each channel that is located on highway right of way, or that impacts a highway facility.
5. The environmental impact of channel modification, including disturbance of fish habitat, wetlands, or channel stability, should be assessed.

The most important factor in channel design is stability. Channel stability is the result of controlling the effects of scour and siltation.

A highway alignment or improvement can cross, encroach upon, or otherwise require construction of a new channel or modification of the existing channel. It is necessary to protect the public, the highway investment, and the environment from the natural reaction to the highway changes. The facility, including bank protection, should perform without significant damage or hazard to people and property for flood and flow conditions experienced on a 1% annual EP. The facility, to the maximum extent possible, should perpetuate natural drainage conditions thus protecting and maintaining the environment.

203-6.03 Open-Channel Flow

Design analysis of a natural or artificial channel should proceed according to the basic principles of open-channel flow (see Chow, 1970; Henderson, 1966). The basic principles of fluid mechanics, continuity, momentum, and energy can be applied to open-channel flow with the additional complication that the position of the free surface is one of the unknown variables. The determination of this unknown is one of the principal problems of open-channel flow analysis. It depends on quantification of the flow resistance. A natural channel displays a wider range of roughness values than an artificial channel.

203-6.04 Stream Channel

203-6.04(01) Stream Morphology

HEC-20 Stream Stability at Highway Structures, and HDS-6 River Engineering for Highway Encroachments, should be consulted. Additional references can be obtained through FHWA hydraulics publications.

203-6.04(02) Design Considerations

1. The hydraulic effects of floodplain encroachment should be evaluated for the 1% annual EP, and other design-storm events as required, for a major highway facility.
2. If relocation of a stream channel is unavoidable, the cross-sectional shape, meander, pattern, roughness, sediment transport, and slope should satisfy the existing conditions insofar as practical. A means of energy dissipation may be necessary where existing conditions cannot be duplicated. Coordination with the Environmental Services Division will be necessary for stream channel relocation. See Section 203-3.0.

3. Stream-bank stabilization should be provided, where appropriate, as a result of a stream disturbance such as encroachment. It should include both upstream and downstream banks and the local site.
4. Provisions should be incorporated for access by maintenance personnel and equipment to maintain features such as a dike or a levee.
5. Realignment or change to a natural channel should be minimized. The conditions that warrant a channel change are as follows:
    a. the natural channel crosses the roadway at an extreme skew;
    b. the embankment encroaches on the channel; and
    c. the location of the natural channel endangers the highway embankment or adjacent property.
6. For channel clearing, see Section 203-3.03.

203-6.04(03) Design Procedure

The hydraulic analysis of a channel determines the depth and velocity at which a given discharge will flow in a channel of known geometry, roughness, and slope. The depth and velocity of flow are necessary for the design or analysis of a channel lining or highway-drainage structure.

The single-section method is a simple application of Manning's equation to determine tailwater-rating curves for a culvert or to analyze other situations in which uniform or nearly-uniform flow conditions exist. Manning's equation can be used to estimate the high-water elevation for a bridge that does not constrict the flow. See Figure 203-3A for the *n* value for uniform flow in an artificial channel or a natural stream channel.

The step-backwater method is used to compute the complete water surface profile in a stream reach to evaluate the unrestricted water-surface elevation for bridge hydraulic design, flood easement, or a longitudinal encroachment. The step-backwater method is a calculation-intensive iterative process that is suited for a computer application. HEC-RAS should be used. Other programs may be used with prior authorization from the Office of Hydraulics.

The step-backwater method should be used for stream-channel analysis. The single-section method will yield less-reliable results, as it requires more judgment and assumptions than the step-backwater method. However, the single-section method should be used for analysis of a standard roadway ditch, culvert, or storm-drain outfall.

203-6.05 Roadside Channel or Other Ditches

203-6.05(01) Design Considerations

A roadside channel is a channel, or side ditch, adjacent to the roadway which intercepts runoff and groundwater within the right of way and transports its flow to drainage structures or to a natural waterway. If a property owner has a pipe instead of an open ditch on the property, an equivalent new pipe should be provided instead of an open ditch.

A median ditch, ditch in a cut section, or other critical ditch section should be checked to verify that the water surface elevation from a 1% annual EP does not encroach onto the travel lane.

The criteria which apply to a roadside channel or other ditch are as follows.

1. Safety. Clear-zone requirements should be satisfied (see Chapter 49). Channel side slopes should not exceed the soil or lining's angle of repose, and should be 3H:1V or flatter. See Chapter 49 for more information on the cross section of a roadside channel.

2. Design Discharge. The design discharge for a permanent roadside channel or channel lining should be based on a 10% annual EP. If a natural stream or drainage ditch enters the side ditch, the design should be for a 1% annual EP. A temporary lining should be designed for a 50% annual EP.

3. Channel Freeboard. Freeboard provides a margin of safety against channel overtopping and its consequences. The desirable channel freeboard should be 1 ft, or two velocity heads, whichever is greater, measured from the top of bank. This should be adequate for a small drainage channel. Variance from the freeboard of 1 ft should be justified in the hydraulics report.

4. Intercept. Where a roadside ditch intercepts a drainage ditch located adjacent to a highway embankment, riprap or other suitable protection should be provided where necessary.

5. Velocity. Figure 203-6A provides guidance regarding maximum allowable velocity for natural stream-bed materials.

203-6.05(02) Design Procedure

There can be a location where a stage-discharge relationship has already been measured in a channel. This exists at a gaging station on a stream monitored by the USGS. Measured stage-discharge curves will yield more accurate estimates of water-surface elevation, and should take precedence over the analytical methods described below.

1. Cross Sections. Cross-sectional geometry of a stream is defined by coordinates of lateral distance and ground elevation which locate individual ground points. The cross section is taken normal to the flow direction along a single straight line where possible. In a wide floodplain or bend, it may be necessary to use a section along intersecting straight lines, i.e., a dog-leg section. The cross section should be plotted to reveal inconsistencies or errors.

   Cross sections should be located to be representative of the subreaches between them. A stream location with major breaks in bed profile, abrupt changes in roughness or shape, control sections such as free overfalls, bends, or contractions, or other abrupt changes in channel slope or conveyance will require cross sections at shorter intervals to better model the change in conveyance.

   Cross sections should be subdivided with vertical boundaries where there are abrupt lateral changes in geometry or roughness, such as in overbank flow. The conveyances of each subsection are computed separately to determine the flow distribution and ά, and are then added to determine the total flow conveyance. The subsection divisions should be chosen so that the distribution of flow or conveyance is nearly uniform in each subsection (Davidian, 1984). Selection of cross sections and vertical subdivision of a cross section are shown in Figure 203-6B, Hypothetical Cross Section Showing Reaches, Segments, and Subsections Used in Determining *n* Value.

2. Single-Section Analysis. This method, also known as the slope-area method, is a solution of Manning's equation for the normal depth of flow given the discharge and cross-section properties including geometry, slope, and roughness. It assumes the existence of steady, uniform flow. However, uniform flow rarely exists in either an artificial or natural stream channel. Nevertheless, the single-section method is used to design an artificial channel for uniform flow as a first approximation, and to develop a stage-discharge rating curve in a stream channel for tailwater determination at a culvert or storm-drain outlet.

   The procedure is as follows.

   a. Select the typical cross section at or near the location where the stage-discharge curve is required.

   b. Subdivide the cross section and assign *n* values to the subsections.

   c. Estimate the water-surface slope. Because uniform flow is assumed, the average slope of the streambed can be used.

   d. Apply a range of incremental water-surface elevations to the cross section.

e. Calculate the discharge using Manning's equation for each incremental elevation. Total discharge at each elevation is the sum of the discharges from each subsection at that elevation. In determining hydraulic radius, the wetted perimeter should be measured only along the solid boundary of the cross section, and not along the vertical water interface between subsections.

f. After the discharge has been calculated at several incremental elevations, plot the stage versus discharge. This plot is the stage-discharge curve, and it can be used to determine the water-surface elevation corresponding to the design discharge or other discharges of interest.

g. Perform the multi-section analysis using HEC-RAS due to the complexity of the calculations.

203-6.05(03) Channel Lining

The selection of a roadside-channel lining should reflect both initial costs and long-term maintenance costs. The channel lining should be selected based on the method of allowable tractive force. This is discussed in Section 203-6.05 Roadside Channel or Other Ditches. The following provides the procedure for roadside-channel lining. However, the use of these criteria should be confirmed using the lining-selection methodology described in Section 203-6.05.

1. Seeded Channel, $G < 1\%$. A seeded channel is protected from erosion by means of fast-growing permanent seeding. This type of channel has the advantage of being low in initial cost and maintenance, aesthetically pleasing, and compatible with the natural environment. The use of an erosion control mat, e.g., straw, coconut fiber, is encouraged to help establish seed growth.

2. Sod-Lined Channel, $1\% \leq G < 3\%$. A sod-lined channel is protected from erosion by means of a sod cover. It is used as a roadside channel in a median or at a channel change of a small watercourse. It may also be used on a steeper grade where ditch flow is a minimum. A sodded channel has the advantage of being low in initial cost, aesthetically pleasing, and compatible with the natural environment. This type of channel should be selected for use wherever practical. The channel should be sodded to a point 1 ft above the flow line.

3. Paved Channel, $G \geq 3\%$. A paved concrete ditch can be resistant to erosion. Its principal disadvantages are its high maintenance and initial costs, susceptibility to failure if undermined by scour, and the tendency for scour to occur downstream due to an acceleration of flow. A paved channel is less desirable for a rural setting. However, it can

be appropriate in a select urban location. The INDOT *Standard Drawings* illustrate the standard paved channels. Type A through H is used where the toe of the ditch is outside of the clear zone. Type J through M is used where the toe of the ditch is inside the clear zone. For Type J through M, the 6H:1V side slope should be placed nearest to the roadway. The INDOT *Standard Drawings* also indicate the type of paved channel that should be used based on the diameter of the pipe at the outlet and inlet.

The following applies to a roadside channel or other type of drainage ditch:

a. Transition. A paved-side-ditch transition is required at an intersection with an earth ditch or pipe culvert.

b. Cut-Off Wall. A cut-off wall is required at the beginning and end of each paved side ditch.

c. Lug. A lug has been proven to prevent sliding on a steep slope. A lug should be provided at the locations as follows:

(1) 10 ft downslope from a grade change;
(2) 10 ft downslope from the intersection of different types of paved side ditches;
(3) at the downslope end of a transition between different types of paved side ditches; or
(4) as shown in Figure 203-6C, Lug Intervals.

4. Riprap-Lined Channel, $3\% \leq G \leq 10\%$. A riprap lining is effective for this slope range, depending on the design flow of the channel. However, riprap should be used on a slope steeper than 10% at a bridge cone. It is also appropriate to use riprap in a ditch where the grade is flatter than 3%. For example, if there is a hill in the ditch watershed, riprap should be placed to dissipate energy and minimize ditch erosion. A mild slope is constructed by means of dumping riprap into a prepared channel lined with geotextile filter cloth and grading to the desired shape. The advantages are low construction and maintenance costs and self-healing characteristics. Riprap has a limited application on a steep slope where the flow will tend to displace the lining material.

5. Non-Erodible Channel, $3\% \leq G \leq 15\%$. A non-erodible channel has a lining of soil erosion matting that is resistant to erosion. This type of channel is moderately expensive to construct and, if properly designed, should have a very low maintenance cost. The lining material should extend to the top of the channel, or to at least 6 in. above the design water level measured vertically. HEC-15, Design of Roadside Channels with Flexible Linings, can be used as a reference for channel-lining design. The riprap design procedures

described in HEC 15 are for a channel having a design discharge of 50 cfs or less. Where the design discharge exceeds 50 cfs, the design procedure provided in Section 203-6.06 should be followed.

203-6.06 Bank Protection

One of the hazards of placing a highway near a river or stream channel or other water body is the potential for erosion of the highway embankment due to moving water. If erosion of the highway embankment is to be prevented, bank protection should be anticipated. The proper type and amount of protection should be provided in the appropriate locations.

The available methods of protecting a highway embankment from bank erosion are as follows:

1. relocating the highway away from the stream or water body;
2. moving the water body away from the highway, as a channel change;
3. changing the direction of the current with training works; and
4. protecting the embankment from erosion.

This Section provides procedures for the design of revetment to be used as channel-bank protection, and channel lining on a stream or river with a design discharge greater than 50 cfs. Procedures are also provided for riprap protection at a bridge pier or abutment. For a small discharge, the procedures provided in Chapter 202 should be used. Rock riprap revetment should be used due to its low cost, environmental considerations, flexible characteristics, and widespread acceptance. Other channel-stabilization methods such as a spur, guide-bank retard structure, longitudinal dike, and bulkhead are discussed in Hydraulic Engineering Circular No. 20, *Stream Stability at Highway Structures* and Hydraulic Engineering Circular No. 23, *Bridge Scour and Stream Instability Countermeasures*.

203-6.06(01) Erosion Potential

Channel and bank stabilization is essential to the design of a structure affected by the water environment. The identification of the potential for bank erosion, and the subsequent need for stabilization, is best accomplished through observation. A three-level analysis procedure is provided in HEC-20. The three-level analysis provides a procedure for determining the geomorphological characteristics, evaluating the existing conditions through field observations, and determining the hydraulic and sediment transport properties of the stream. If sufficient information is obtained at a given level of the analysis to solve the problem, the procedure may be stopped without proceeding to the other levels.

Observations provide the most positive indication of erosion potential. Observation comparison can be based on historic information or current site conditions. Aerial photographs, old maps, surveying notes, bridge-design files, and river-survey data are available from the Office of Hydraulics and FHWA. Gaging-station records and interviews of long-time residents can provide documentation of recent and potentially current channel movement or bank instabilities.

Current site conditions can be used to evaluate stability. If historic information indicates that a bank has been relatively stable in the past, local conditions can indicate more recent instabilities. Local site conditions which are indicative of instabilities can include tipping and falling of vegetation along the bank, cracks along the bank surface, the presence of slump blocks, fresh vegetation lying in the channel near the channel banks, deflection of channel flows in the direction of the bank due to a recently-deposited obstruction or channel-course change, fresh vertical face cuts along the bank, locally high velocity along the bank, new bar formation downstream from an eroding bank, local head-cuts, impending or recent cutoffs, etc. The presence of one of these conditions does not in itself indicate an erosion problem. Bank erosion is common in each channel if the channel is stable.

203-6.06(02) Bank and Lining Failure Modes

Prior to designing a bank-stabilization scheme, the common erosion mechanisms and revetment-failure modes, and the causes or driving forces behind bank erosion processes should be known. Inadequate recognition of potential erosion processes at a particular site can lead to failure of the revetment system. Many causes of bank erosion and revetment failure have been identified. The more-common causes include abrasion, debris flows, water flow, eddy action, flow acceleration, unsteady flow, freeze-and-thaw, human actions on the bank, ice, precipitation, waves, toe erosion, and subsurface flow. However, a combination of mechanisms can cause bank or revetment failure. The actual mechanism or cause is difficult to determine. Failures are classified as follows.

1. Particle Erosion: Particle erosion is the most commonly considered erosion mechanism. Particle erosion results if the tractive force exerted by the flowing water exceeds the bank material's ability to resist movement. If displaced stones are not transported from the eroded area, a mound of displaced rock will develop on the channel bed. The mound has been observed to cause flow concentration along the bank, resulting in further bank erosion.

2. Translational Slide: A translational slide is a failure of riprap caused by the down-slope movement of a mass of stones, with the fault line on a horizontal plane. The initial phases of a translational slide are indicated by cracks in the upper part of the riprap bank that extend parallel to the channel. As the slide progresses, the lower part of the riprap separates from the upper part and moves downslope as a homogeneous body. A resulting bulge can appear at the base of the bank if the channel bed is not scoured.

3. Modified Slump: This riprap failure consists of the mass movement of material along an internal slip surface within the riprap blanket. The underlying material supporting the riprap does not fail. This type of failure is similar to the translational slide, but the geometry of the damaged riprap is similar in shape to initial stages of failure caused by particle erosion.

4. Slump: Slump is a rotational-gravitational movement of material along a surface of rupture that has a concave upward curve. The cause of a slump failure is related to shear failure of the underlying base material that supports the riprap revetment. The primary feature of a slump failure is the localized displacement of base material along a slip surface, which is caused by excess pore pressure that reduces friction along a fault line in the base material.

203-6.06(03) Design Considerations

1. Revetment Types.

   a. Riprap. Riprap is a layer or facing of rock, dumped or hand-placed to prevent erosion, scour, or sloughing of a structure or embankment. Materials other than rock are also referred to as riprap. These include rubble, broken concrete slabs, or preformed-concrete shapes such as slabs, blocks, rectangular prisms, etc. These materials are similar to rock in that they can be hand-placed or dumped onto an embankment to form a flexible revetment. The minimum depth should be 18 in. For minimum riprap-laying depths, see the INDOT *Standard Drawings*. For determining which riprap class to use based on velocity, see Figure 203-2D, Stream Velocity for Erosion Protection.

   b. Wire-Enclosed Rock. A wire-enclosed rock, or gabion, revetment consists of rectangular wire mesh baskets filled with rock. This revetment is formed by filling pre-assembled wire baskets with rock and anchoring them to the channel bottom or bank. A wire-enclosed rock revetment is either a rock-and-wire mattress, or blocks. In a mattress, the individual wire-mesh units are laid end to end and side to side to form a mattress layer on the channel bed or bank. The gabion baskets comprising the mattress have a depth dimension which is much smaller than its width or length. A block gabion is more equal-dimensional, having a depth that is approximately the same as its width and of the same order of magnitude as its length. It is rectangular or trapezoidal in shape. A block gabion revetment is formed by stacking individual gabion blocks in a stepped fashion.

c. Precast-Concrete Block. The preformed sections which comprise the revetment system are butted together or joined. As such, they form a continuous blanket or mat. The concrete blocks which make up the mats differ in shape and method of articulation but share certain common features. The features include flexibility, rapid installation, and provisions for establishment of vegetation within the revetment. The permeable nature of this revetment permits free draining of the bank materials. The flexibility, although limited, allows the mattress to conform to minor changes in the bank geometry. Its limited flexibility, however, subjects it to undermining in an environment characterized by large and relatively rapid fluctuations in the surface elevation of the channel bed or bank. Unlike wire-enclosed rock, the open nature of precast-concrete blocks does promote volunteering of vegetation within the revetment.

d. Grouted Riprap. Totally grouted riprap is not recommended because it is susceptible to failure from undermining and the subsequent loss of the supporting bank material. However, partially grouted riprap may be used, see Section 203-6.06(04) for design procedures.

e. Grouted-Fabric-Slope Pavement. This revetment is constructed by means of injecting sand-cement mortar between two layers of double-woven fabric which has first been positioned on the slope to be protected. Mortar can be injected into this fabric envelope either underwater or in-the-dry. The fabric enclosure prevents dilution of the mortar during placement underwater. The two layers of fabric act first as the top and bottom form to hold the mortar in place while it hardens. The fabric, to which the mortar remains tightly bonded, then acts as tensile reinforcement to hold the mortar in place on the slope. This revetment is analogous to slope paving with reinforced concrete. The bottom layer of fabric acts as a filter-cloth underlayment to prevent loss of soil particles through cracks which can develop in the revetment as a result of soil subsidence. Greater relief of hydrostatic uplift is provided by means of weep holes or filter points which are woven into the fabric and remain unobstructed by mortar during the filling operation.

f. Soil Cement. Soil cement consists of a dry mix of sand, cement, and admixtures batched in a central mixing plant. It is transported, placed with equipment capable of producing the width and thickness required, and compacted to the required density. Control of the moisture and time after introduction of the mixing water is critical. Curing is required. This results in a rigid protection. Soil cement can be placed either as a lining or in stepped horizontal layers. The stepped horizontal layers are stable, provided that toe scour protection has been incorporated into the design.

2. Design Discharge. The design flow rate for the design or analysis of a highway structure in the vicinity of a river or stream has a 10% to 1% annual EP. This discharge level will also be applicable to the design of a revetment system. However, a lower discharge can produce hydraulically-worse conditions with respect to riprap stability. Discharge levels should be evaluated to ensure that the design is adequate for all discharge conditions up to that selected as the design discharge for a structure associated with the riprap scheme.

3. Flow Types. Open-channel flow can be classified as follows:

   a. uniform, gradually-varying, or rapidly-varying flow;
   b. steady or unsteady flow; and
   c. subcritical or supercritical flow.

   The design relationships described herein are based on the assumption of uniform, steady, subcritical flow. The relationships are also valid for gradually-varying flow conditions. Although the individual hydraulic relationships are not in themselves applicable to rapidly-varying, unsteady, or supercritical flow conditions, procedures are provided for extending their use to these flow conditions. See Section 203-6.06(04) for more information related to channel design.

   A rapidly-varying, unsteady flow condition is common in an area of flow expansion, flow contraction, or reverse flow. These conditions are common at and immediately downstream of a bridge. A supercritical or near-supercritical flow condition is common at a bridge constriction or a steeply-sloped channel.

4. Section Geometry. Aerial photography, current-channel surveys, and historic surveys can provide valuable information. A comparison of current and past channel surveys at the location provides information on the stability of the site and a history of past channel-geometry changes. Past surveys for a particular site may not be available. If so, past surveys at other sites in the vicinity of the design location can be used to evaluate past changes in channel geometry.

5. Flow in Channel Bend. The increased velocity and shear stress that are generated as a result of non-uniform flow should be considered on the outside of a bend. Superelevation of flow in a channel bend should be considered in the revetment design. For a channel with overbank flow, the revetment should extend to top of bank. For a channel where the flow remains within the banks, the revetment should extend up the banks to provide a freeboard of at least 1 ft. For guidance in the design of channels in a bend, see HEC-15 and HDS-4.

6. Flow Resistance. The hydraulic analysis performed as a part of the revetment design process requires the estimation of Manning's roughness coefficient. Physical characteristics upon which the resistance equations are based include the channel-base material, surface irregularities, variations in section geometry, bed form, obstructions, vegetation, channel meandering, flow depth, and channel slope. Seasonal changes in these factors should also be considered.

7. Extent of Protection. This refers to the longitudinal and vertical extent of protection required to adequately protect the channel bank.

   a. Longitudinal Extent. The longitudinal extent of protection required for a bank-protection scheme is dependent on local site conditions. The revetment should be continuous for a distance greater than the length that is impacted by channel-flow forces severe enough to cause dislodging or transport of bank material. Although this is a vague criterion, it should be considered. Review of existing bank-protection sites has revealed that a common misconception in stream-bank protection is to provide protection too far upstream and not far enough downstream.

      One criterion for establishing the longitudinal limits of revetment protection required is illustrated in Figure 203-6D. As illustrated, the minimum distance recommended for bank protection upstream is 1 channel width, or downstream 1.5 channel widths, from corresponding reference lines. All reference lines should pass through tangents to the bend at the bend entrance or exit. This criterion is based on an analysis of flow conditions in symmetric channel bends under ideal laboratory conditions. Real-world conditions are not as simplistic.

      Many site-specific factors have an effect on the actual length of bank that should be protected. The above criteria are difficult to apply on a mildly-curving bend or on a channel having irregular, non-symmetric bends. Other channel controls such as bridge abutments can produce a stabilizing effect on the bend so that only a part of the channel bend should be stabilized. The magnitude or nature of the flow event can cause erosion problems only in a localized portion of the bend, requiring that only a short channel length be stabilized. Therefore, the above criteria should be used only as a starting point. Additional analysis of site-specific factors is necessary to define the actual extent of protection required.

      Field reconnaissance is useful for the evaluation of the longitudinal extent of protection required, particularly if the channel is actively eroding. In a straight channel reach, scars on the channel bank can be useful to help identify the limits required for channel-bank protection. The upstream and downstream limits of the

protection scheme should be extended a minimum of 1 channel width beyond the observed erosion limits.

In a curved channel reach, the scars on the channel bank can be used to establish the upstream limit of erosion. A minimum of 1 channel width should be added to the observed upstream limit to define the limit of protection. The downstream limit of protection required in a curved channel reach is more difficult to define. Because the natural progression of bank erosion is in the downstream direction, the present visual limit of erosion may not define the ultimate downstream limit. Additional analysis based on consideration of flow patterns in the channel bend can be required.

b. Vertical Extent. The vertical extent of protection required of a revetment includes design height and foundation or toe depth.

(1) Design Height. The design height of a riprap installation should be equal to the design high-water elevation plus an allowance for freeboard. Freeboard is provided in a causeway situation to ensure that the desired degree of protection will not be reduced due to unaccounted factors, including the following:

(a) superelevation in channel bends;
(b) hydraulic jumps;
(c) flow irregularities due to piers, transitions, or flow junctions; or
(d) wave action from wind or boat traffic.

Erratic phenomena such as unforeseen embankment settlement, the accumulation of silt, trash, debris in the channel, aquatic or other growth in the channel, and ice flows should be considered in setting the freeboard height. Wave run-up on the bank should be considered.

The prediction of wave height from a boat-generated wave is not as straightforward as other wave sources. Figure 203-6E provides a definition sketch for the wave-height discussion below. The height of a boat-generated wave should be estimated from observations.

It is necessary to estimate the magnitude of wave run-up which results if waves impact the bank. Wave run-up is a function of the design-wave height, the wave period, bank angle, and the bank-surface characteristics as represented by different revetment materials. For a wave height of less than 2 ft, wave run-up can be computed using Figures 203-6F, Wave Run-up on

Smooth Impermeable Slope, and 203-6G, Correction Factor for Wave Run-up. The run-up height, *R*, shown in Figure 203-6F, is for concrete pavement. Correction factors are provided in Figure 203-6G for reducing the run-up magnitude for other revetment materials. The correction factor is multiplied by the wave height to obtain *R*.

As a minimum, a freeboard of 1 ft to 2 ft should be used in an unconstricted reach, or 2 ft to 3 ft in a constricted reach. FEMA requires 3 ft for levee protection, or 4 ft at a bridge for a 1% annual EP. If computational procedures indicate that additional freeboard is required, the greater height should be used. Wave and flow conditions should be observed during various seasons of the year, if possible. Existing records should be consulted, and persons should be interviewed who have knowledge of past conditions in establishing the necessary vertical extent of protection required for a particular revetment installation.

(2) Toe Depth. The undermining of revetment-toe protection has been identified as one of the mechanisms of revetment failure. Figure 203-6H identifies dimensions of the toe trench for classes of riprap. For guidance regarding the design of the toe depth, see HEC-11, Design of Riprap Revetment.

203-6.06(04) Design Procedure

1. Rock Riprap. Guidelines are provided for bank slope, rock size, rock gradation, riprap layer thickness, and edge treatment. The guidelines apply equally to rock or rubble riprap.

a. Bank Slope. A primary consideration in the design of a stable riprap bank-protection scheme is the slope of the channel bank. For a riprap installation, the maximum recommended face slope is 2H:1V. Although not recommended, the steepest slope acceptable for rubble revetment is 1.5H:1V. To be stable under an identical wave attack or lateral velocity, a rubble revetment with a steep slope will require larger rubble sizes and greater thicknesses than one with a flatter slope.

b. Rock Size. The stability of a particular riprap particle is a function of its size, expressed either in terms of its weight or equivalent diameter. See the INDOT *Standard Specifications* and Figure 203-2D which relates the required riprap class to the velocity.

(1) Bridge Pier. For recommendations, see Section 203-3.0.

(2) Wave Erosion. See Highway Engineering Circular 23, Volume 2, Design Guide 17 for guidance if wave erosion is anticipated.

(3) Ice Damage. Ice can affect riprap linings. Moving surface ice can cause crushing and bending forces and large impact loadings. The tangential flow of ice along a riprap-lined channel bank can also cause excessive shearing forces. Quantitative criteria for evaluating the impact ice has on a channel-protection scheme are unavailable.

For design, consideration of ice forces should be evaluated as required for each project. Ice flows are not of sufficient magnitude to warrant detailed analysis. Where ice flows have historically caused problems, revetment size should be increased.

c. Rock Gradation. The gradation of stones in riprap revetment affects the riprap's resistance to erosion. The stone should be well-graded throughout the riprap-layer thickness. The gradation limits appear in the INDOT *Standard Specifications*.

d. Layer Thickness. All stones should be contained within the riprap-layer thickness to provide maximum resistance against erosion. For guidance, see the INDOT *Standard Specifications*.

e. Geotextile Filter. A synthetic geotextile filter should be used as an alternative to a granular filter. See Figure 203-6 I. Since the original geotextile erosion control application in 1957, thousands of successful projects have been completed.

f. Edge Treatment. The riprap-revetment flanks, toe, and head require a treatment to prevent undermining. The flanks should be designed as illustrated in Figure 203-6J. The upstream flank is illustrated in section (a) and the downstream flank in section (b). A more constructible flank section uses riprap rather than compacted fill.

Undermining of the revetment toe is one of the primary mechanisms of riprap failure. The toe of the riprap should be designed as illustrated in Figure 203-6K. The toe material should be placed in a toe trench along the entire length of the riprap blanket.

Where a toe trench cannot be dug, the riprap blanket should terminate in a thick, stone toe at the level of the streambed. The toe material should not mound and form a low dike. A low dike along the toe can result in flow concentration along

the revetment face which can stress the revetment to failure. The channel's design capability should not be impaired due to placement of too much riprap in a toe mound.

The size of the toe trench or the alternate stone toe is controlled by the anticipated depth of scour along the revetment. As scour occurs, the stone in the toe will launch into the eroded area as illustrated in Figure 203-6L. Observation of the performance of this type of rock toe indicates that the riprap will launch to a final slope of approximately 2H:1V.

The volume of rock required for the toe should be equal to or exceed 1.5 times the volume of rock required to extend the riprap blanket at its design thickness and on a slope of 2H:1V, to the anticipated depth of scour. Dimensions should be based on the required volume using the thickness and depth determined from the scour evaluation. The alternate location can be used if the amount of rock required does not constrain the channel.

2. Wire-Enclosed Rock. As described in Section 203-6.06(03), a wire-enclosed rock, or gabion, revetment consists of rectangular wire mesh baskets filled with rock. The most common types of wire-enclosed revetment are mattresses and stacked blocks. The wire cages which make up the mattresses and gabions are available from commercial manufacturers.

A rock-and-wire-mattress revetment consists of flat wire baskets or units filled with rock that are laid end to end and side to side on a prepared channel bed or bank. The individual mattress units are wired together to form a continuous revetment mattress.

A stacked-block gabion revetment consists of rectangular wire baskets which are filled with stone and stacked in a stepped-back fashion to form the revetment surface. It is commonly used at the toe of an embankment slope as a toewall, which helps to support other upper-bank revetments and prevents undermining.

a. Mattress Gabion. Components of a rock-and-wire-mattress include layout of a general scheme, bank and foundation preparation, mattress size and configuration, stone size, stone quality, basket- or rock-enclosure fabrication, edge treatment, and filter design. Design guidance is as follows.

(1) General. A rock-and-wire-mattress revetment can be constructed from commercially-available wire units as illustrated in Figures 203-6M and 203-6N. The use of commercially-available basket units is the most common practice and the least expensive.

A rock-and-wire-mattress revetment can be used to protect either the channel bank as illustrated in Figure 203-6M, or the entire channel perimeter as illustrated in Figure 203-6N. If used for bank protection, this revetment consists of a toe section and upper-bank paving. The vertical and longitudinal extent of the mattress should be based on guidelines provided in Section 203-6.06(03).

(2) Bank and Foundation Preparation. The channel bank should be graded to a uniform slope. The graded surface, either on the slope or on the streambed at the toe of the slope on which the rock-and-wire mattress is to be constructed, should not deviate from the specified slope line by more than 6 in. Blunt or sharp objects such as rocks or tree roots protruding from the graded surface should be removed.

(3) Mattress-Unit Size and Configuration. Individual mattress units should be of a size that is easily handled on-site. Commercially-available gabion units are available in standard sizes as indicated in Figure 203-6 O. Manufacturers' literature indicates that alternative sizes can be manufactured if required, provided that the quantities involved are reasonable.

The mattress should be divided into compartments so that failure of one section of the mattress will not cause loss of the entire mattress. Compartmentalization also adds to the structural integrity of individual gabion units.

On a slope steeper than 1H:3V, and in an environment subject to high flow velocity, debris flow, ice flow, etc., diaphragms should be spaced at minimum intervals of 2 ft to prevent movement of the stone inside the basket.

The thickness of the mattress is determined by the erodibility of the bank soil, the maximum velocity of the water, and the bank slope. The minimum thickness required for given conditions is tabulated in Figure 203-6P. These values are based on observations of a number of mattress installations which assume a filling material in the size range of 3 to 6 in.

The mattress thickness should be at least as thick as two overlapping layers of stone. The thickness of a mattress used as a bank-toe apron should exceed 12 in. The range is 12 to 20 in.

(4) Stone Size. The maximum stone size should not exceed the thickness of the individual mattress units. The stone should be well-graded within the sizes available. Seventy percent of the stone, by weight, should be slightly larger than the wire-mesh opening. For commercially-available units, the wire-mesh opening sizes are listed in Figure 203-6 O.

The common median-stone size used in a mattress design ranges from 3 to 6 in. for a mattress thickness of less than 12 in. For a thicker mattress, rock with a median size of up to 12 in. should be used.

(5) Stone Quality. The stone should satisfy the quality requirements for dumped-rock riprap.

(6) Basket Fabrication. Commercially-fabricated basket units are formed from galvanized steel wire mesh of triple twist hexagonal weave. The netting wire and binding wire diameter is approximately 0.08 in. The wire diameter for edges and corners is approximately 0.01 in. Manufacturers' instructions for field assembly of basket units should be followed.

Galvanized wire baskets can be safely used in fresh water or where the pH of the liquid in contact with it is not greater than 10. For minimum coating weight, see Figure 203-6Q.

For a highly-corrosive condition, such as in a salt-water environment, industrial area, polluted stream, or soil such as muck, peat, or cinders, a PVC coating should be placed over the galvanized wire. It should be capable of resisting deleterious effects of natural weather exposure and immersion in salt water. It should not show a material difference in its initial characteristics over time.

(7) Edge Treatment. The toe, head, and flanks of a rock-and-wire mattress revetment installation require treatment to prevent damage from undermining. Figure 203-6M illustrates the possible toe-treatment configurations. If a toe apron is used, its projection should be 1.5 times the expected maximum depth of scour in the vicinity of the revetment toe. Where little toe scour is expected, the apron can be replaced with a single-course gabion toewall. This helps to support the revetment and prevents undermining. Where an excessive amount of toe scour is anticipated, both an apron and a toe wall can be used.

To provide extra strength at the revetment flanks, mattress units having additional thickness should be used at the upstream and downstream edges of the revetment, as shown in Figure 203-6R. A thin layer of topsoil should be spread over the flank units to form a soil layer to be seeded once the revetment installation is complete. The head of a rock-and-wire-mattress revetment can be terminated at grade as illustrated in Figure 203-6M.

(8) Filter Design. Individual mattress units will act as a crude filter and a pavement unit if filled with overlapping layers of hand-size stones. However, the need for a filter should be investigated. If necessary, a layer of permeable membrane cloth, or geotextile, woven from synthetic fibers, or a gravel layer of thickness of 4 to 6 in. should be placed between the silty bank and the rock-and-wire-mattress revetment to further inhibit washout of fines.

b. Stacked-Block Gabion: Components of a stacked-block gabion revetment include the layout of a general scheme, bank and foundation preparation, unit size and configuration, stone size and quality, edge treatment, backfill and filter considerations, and basket or rock enclosure fabrication. Design guidelines for stone size and quality and bank preparation are the same as those for a mattress design.

(1) General. A stacked-block gabion revetment should be used instead of a gabion mattress where the slope to be protected is steeper than 1H:1V, or where the purpose of the revetment is for flow training. Methods include a flow-training wall, as shown in Figure 203-6 S detail (a), or a low retaining wall, as shown in Figure 203-6 S detail (b).

A stacked-block gabion revetment should be based on a firm foundation. The foundation or base elevation of the structure should be below the anticipated scour depth. In an alluvial stream where channel-bed fluctuations are common, an apron should be used as illustrated in Figure 203-6 S. An apron should be used where the estimated scour depth is uncertain.

(2) Size and Configuration. The common commercial sizes are listed in Figure 203-6 O. The most common size used is that of width and depth of 3 ft. A thickness of less than 1 ft is not practical.

Configurations include a flow-training wall or a structural retaining wall. The primary function of a flow-training wall is to establish a normal channel

boundary in a stream where erosion has created a wide channel, or to realign the stream where it is encroaching on an existing or proposed structure. A stepped-back wall is constructed at the desired bank location. Counterforts are installed to tie the wall to the channel bank at regular intervals as illustrated. The counterforts are installed to form a structural tie between the training wall and the natural stream bank and to prevent overflow from scouring a channel behind the wall. Counterforts should be spaced to eliminate the development of eddy or other flow currents between the training wall and the bank which can cause further erosion of the bank. The dead-water zones created by the counterforts so spaced will encourage sediment deposition behind the wall which will enhance the stabilizing characteristics of the wall.

A retaining wall can be designed in a stepped-back configuration as illustrated in Figure 203-6 S detail (b). Structural details and configurations can vary from site to site.

A gabion wall is a gravity structure, and its design follows engineering practice for a retaining structure. The design procedure is available in soil-mechanics texts or in gabion manufacturers' literature.

(3) Edge Treatment. The upstream and downstream flanks of the revetment should include counterforts. See Figure 203-6 S detail (a). The counterforts should be placed 12 to 18 ft from the upstream and downstream limits of the structure, and should extend a minimum of 12 ft into the bank.

The toe of the revetment should be protected by means of placing the base of the gabion wall at a depth below the anticipated scour depth. Where it is difficult to predict the depth of expected scour, or where channel-bed fluctuations are common, a mattress apron should be used. The minimum apron length should be equal to 1.5 times the anticipated scour depth below the apron. This length can be increased in proportion to the level of uncertainty in predicting the local toe-scour depth.

(4) Backfill or Filter Requirements. Gabion-structure design requires the use of selected backfill behind the retaining structure to provide for drainage of the soil mass behind the retaining structure. The permeable nature of a gabion structure permits natural drainage of the supported embankment. However, because material leaching through the gabion wall can become trapped and can cause plugging, a granular backfill material should be used.

The backfill should consist of a 2 to 12 in. layer of graded crushed stone backed with a layer of fine granular backfill.

3. Precast Concrete Blocks. A precast-concrete-block revetment consists of preformed sections which interlock with each other, are attached to each other, or butt together to form a continuous blanket or mat. The concrete blocks which make up the mats differ in shape and method of articulation, but they share common features. These include flexibility, rapid installation, and provision for the establishment of vegetation within the revetment.

a. Block Configurations. Precast-concrete blocks are available the shapes and configurations shown in Figures 203-6T, 203-6U, 203-6V, 203-6W, and 203-6X. Other manufacturers' configurations are available. A precast-concrete revetment is bound to rectangular sheets of filter fabric, interlocks individual blocks, or is butted together at the site. The most common method is to join individual blocks with wire cable or synthetic fiber rope.

b. Design Guidelines. Components of a precast-concrete-block revetment design include layout of a general scheme, bank preparation, mattress and block size, slope, edge treatment, filter design, and surface treatment.

As illustrated in Figures 203-6T, 203-6U, 203-6V, 203-6W, and 203-6X, precast-concrete blocks are placed on the channel bank as continuous mattresses.

(1) Mattress And Block Size. The overall mattress size is dictated by the longitudinal and vertical extent required of the revetment system. An articulated block mattress is assembled in sections prior to placement on the bank. The size of individual blocks is variable. Manufacturers have a number of standard sizes of a particular block available. Manufacturers' literature should be consulted in selecting an appropriate block size for a given hydraulic condition.

(2) Slope. An articulated precast-block revetment can be used on a bank slope up to 1.5H:1V. However, an earth anchor should be used at the top of the revetment to secure the system against slippage (see Figures 203-6V and 203-6W). A precast-block revetment that is assembled by means of butting individual blocks end to end with no physical connection should not be used on a slope steeper than 3H:1V.

(3) Edge Treatment. The toe, head, and flanks require treatment to prevent undermining. Toe treatment includes an apron as illustrated in Figures 203-6T and 203-6W, or a toe-trench as illustrated in Figures 203-6U and 203-

6V. As a minimum, a toe apron should extend 1.5 times the anticipated scour depth in the vicinity of the bank toe. If a toe trench is used, the mattress should extend to a depth greater than the anticipated scour depth in the vicinity of the bank toe.

The edges can be terminated at grade as shown in Figures 203-6T, 203-6U, and 203-6W, or in a termination trench. A termination trench should be used in silty or sandy soil, for a high-velocity flow, or where failure of the revetment results in significant economic loss. A termination trench provides more protection against failure from undermining and outflanking than an at-grade termination. However, where upper-bank erosion or lateral outflanking is not expected to be a problem, a grade termination can provide an economic advantage.

For an articulated block, earth anchors should be placed at regular intervals along the top of the revetment (see Figures 203-6U and 203-6V). Anchors should be spaced based on soil type, mat size, and the size of the anchors. See manufacturers' literature for the recommended spacing.

(4) Filter. Prior to installing the mats, a geotextile filter fabric should be installed on the bank to prevent bank material from leaching through the openings in the mattress structure. Although a fabric filter is recommended, graded filter material can be used if it is properly designed and installed to prevent movement of the graded material through the protective mattress.

(5) Surface Treatment. The surface treatments should be as shown in Figures 203-6U and 203-6V. This treatment enhances both the structural stability of the embankment and its aesthetic qualities.

4. Grouted Riprap. Partially-grouted riprap should be used. It consists of rock-slope protection that is spot grouted to bind individual rocks into larger masses while leaving ungrouted areas so they are not connected into a monolithic armor. Partially-grouted riprap is flexible and allows vegetation to be established within the non-grouted areas which can also assist in stabilizing the slope. It can be placed on a bedding or filter layer of sand, gravel or geotextile fabric. It is hydrostatically stable, as it prevents trapping groundwater. The large interlocking masses provide resistance to stream flow and wave action. Optimal grouting ties together adjacent rock, but still leaves internal voids within the rock masses. A grouted-riprap section is shown in Figure 203-6Y. For additional information regarding partially-grouted riprap, see HEC-23.

Partially grouted riprap should extend from below the anticipated channel-bed scour depth to the design high-water level, plus additional height for freeboard.

a. Bank and Foundation Preparation. The graded surface should not deviate from the specified slope line by more than 6 in. However, a local depression larger than this can be accommodated because initial placement of filter material or rock for the revetment will fill the depression.

b. Bank Slope. The bank slope should not be steeper than 1.5H:1V. The Office of Geotechnical Services should be consulted for guidance.

c. Edge Treatment. The head, toe, and flanks require treatment to prevent undermining. The revetment toe should extend to a depth below anticipated scour depths or to bedrock. The toe should be designed as illustrated in Figure 203-6Y, Grouted Riprap Sections, detail (a). The grout-free riprap provides extra protection against undermining at the bank toe. Edge-treatment configurations are illustrated in Figure 203-6Y.

d. Filter. A filter is required under the grouted-riprap revetment to provide a zone of high permeability to carry off seepage water and prevent damage to the overlying structure from uplift pressure. A granular filter of 6-in. thickness is required beneath the pavement to provide an adequate drainage zone. The filter can consist of well-graded granular material or uniformly-graded granular material with an underlying filter fabric. The filter should be designed to provide a high degree of permeability while preventing base material particles from penetrating the filter, thus causing clogging and failure of the protective filter layer.

e. Pressure Relief. Weep holes should be provided in the revetment to relieve hydrostatic pressure buildup behind the grout surface; see Figure 203-6Y detail (a). Weep holes should extend through the grout surface to the interface with the gravel underdrain layer. Weep holes should consist of pipes of 3-in. diameter with a maximum horizontal spacing of 6 ft and a maximum vertical spacing of 10 ft. The buried end of the weep hole should be covered with wire screening or a fabric filter of a gage that will prevent passage of the gravel underlayer.

5. Grouted-Fabric Slope Paving. A grouted fabric-formed revetment is a relatively new development for use on an earth surface subject to erosion. It has been used as an alternative to traditional revetment such as a concrete liner, or riprap on a reservoir, canal, or dike.

A grouted fabric-formed revetment is made by means of pumping a fluid structural grout, or fine-aggregate concrete, into an in-situ envelope consisting of a double-layer synthetic fabric. During filling, excess mixing water is squeezed out through the permeable fabric, to reduce the water/cement ratio with consequent improvement in the quality of the hardened concrete. An advantage of this type of revetment is that it can be assembled underwater or in a dry location.

a. Types. The types of fabric-formed revetments are as follows.

(1) Type 1. Two layers of nylon fabric are woven together at 5 in. to 10 in. centers as indicated in Figure 203-6Z. These points of attachment serve as filter points to relieve hydrostatic uplift caused due to percolation of groundwater through the underlying soil. The finished revetment has a deeply-cobbled or quilted appearance. Mat thickness averages from 2 to 6 in.

(2) Type 2. Two layers of nylon or polypropylene woven fabric are joined together at spaced centers by means of interwoven tie cords, the length of which controls the thickness of the finished revetment. See Figure 203-6AA. Plastic tubes can be inserted through the two layers of fabric prior to grout injection to provide weep holes for relief of hydrostatic uplift. The finished revetment is of uniform cross section and has a lightly-pebbled appearance. Mat thickness averages from 2 to 10 in.

(3) Type 3. Two layers of nylon fabric are interwoven into rectangular block patterns. The points of interweaving serve as hinges to permit articulation of the hardened concrete blocks. The revetment is reinforced with steel cables or nylon rope threaded between the two layers of fabric prior to grout injection and remains embedded in the hardened cast-in-place blocks. Block thickness is controlled with spacer cords in the center of each block.

b. Design Guidelines. The woven fabric for a grouted fabric-formed revetment is available from a number of manufacturers. Manufacturers' literature should be consulted for designing and selecting the appropriate type of material and thickness for a given hydraulic condition.

6. Soil-Cement. Soil-cement is an acceptable method of slope protection for a dam, dike, levee, channel, or highway embankment. Soil-cement can also be used to construct an impervious core and provide a protective facing. Soil-cement is constructed in a stairstep manner by means of placing and compacting it in horizontal layers stairstepped up the embankment (See Figure 203-6BB). An embankment slope from 2.5H:1V to 4H:1V, and

a horizontal-layer width from 7 ft to 9 ft provide minimum protective thicknesses of about 1.5 to 2.5 ft measured normal to the slope.

The Portland Cement Association (PCA) has data on soil types, gradations, costs, and testing procedures. The PCA also has data on placement and compaction methods.

Use of soil-cement does not require further design considerations for the embankment. Proper embankment design procedures should be followed based on individual project conditions, to prevent subsidence or other type of embankment distress.

a. Top, Toe, and End Features. All extremities of the facing should be tied into non-erodible sections or abutments. Adequate freeboard and the carrying of the soil-cement to the paved roadway, plus a lower section as shown in Figure 203-6BB, will minimize erosion from behind the crest and under the toe of the facing. The ends of the facing should terminate smoothly in a flat slope or against a rocky abutment. A small amount of rock riprap can be placed over and adjacent to the edges of the soil-cement at its contact with the abutment.

b. Special Conditions. Slope stability is provided for an embankment by means of the strength and impermeability of the soil-cement facing. Further design considerations should not be necessary for a soil-cement-faced embankment. It is necessary to utilize proper design and analysis procedures to ensure the structural and hydraulic integrity of the embankment. Conditions most likely to require analysis include subsidence of the embankment or rapid drawdown of the reservoir or river.

c. Subsidence. Embankment subsidence results from a compressible foundation, settlement within the embankment itself, or both. Analyzing the possible effects of such a condition involves assumptions concerning the embankment behavior. Combining these assumptions with the characteristics of the facing, a structural analysis of the condition can be made. If the unit weight and flexural strength of the soil-cement are not known, they should be taken as 120 lb/ft^3 and 150 to 200 lb/in^2, respectively. The layer effect can be ignored.

The post-construction appearance of a pattern of narrow surface cracks of about 10 to 20 ft apart is evidence of normal hardening of the soil-cement. Substantial embankment subsidence can allow the facing to settle back in large sections coinciding with the normal shrinkage-crack pattern. If such settlement of the soil-cement, with separation at the shrinkable cracks, takes place, the slope remains adequately protected unless the settlement is large enough to allow the outer face of a settling section to move past the inner face of an adjoining section.

d. Rapid Drawdown. Rapid drawdown exceeding 15 ft or more within 3 to 4 days theoretically produces hydrostatic pressure from moisture trapped in the embankment against the back of the facing. The design concepts that can be used to prevent damage due to rapid drawdown-induced pressure are as follows:

(1) designing the embankment so that its least-permeable zone is immediately adjacent to the soil-cement facing, which ensures that seepage through cracks in the facing will not build up a pool of water sufficient to produce damaging hydrostatic pressure;

(2) arbitrarily assuming the weight of the facing sufficient to resist uplift pressures that may develop; and

(3) providing free drainage behind, through, or under the soil-cement facing to prevent adverse hydrostatic pressure.

203-7.0 REFERENCES

1. AASHTO *Highway Drainage Guidelines*, Hydraulic Analyses for the Location and Design of Bridges, AASHTO Task Force on Hydrology and Hydraulics, 2007.
2. AASHTO, *Model Drainage Manual*, Chapter Ten, Bridges.
3. Abt, S.R., Donnell, C.A., Ruff, J.F., and Doehring, F.K., *Culvert Shape and Slope Effects on Outlet Scour*, Transportation Research Record 1017, 1985.
4. ASCE Journal of the Hydraulics Division, *Hydraulic Design of Stilling Basins*, paper 1406, October 1957.
5. Blaiswell, F.W., *SAF Stilling Basin*, U.S. Government Printing Office, 1959.
6. Bradley, J.N., *Hydraulics of Bridge Waterways*, HDS 1, Federal Highway Administration, 1978.
7. Brater, E. F. and King, H.W., *Handbook of Hydraulics*, 6th ed., New York: McGraw Hill Book Company, 1976.
8. Brown, S.A., *Design of Riprap Revetment*, FHWA, Hydraulic Engineering Circular No. 11 (HEC 11), IP-89-016, Washington, DC 20590, 1989.
9. Bureau of Reclamation, *Hydraulic Design of Stilling Basins and Energy Dissipators*, Engineering Monograph No. 25, third printing, 1974.
10. Chow, C. N., *Open Channel Hydraulics*, New York: McGraw Hill Book Company, 1959.
11. Corry, M.L., Jones, J.S., and Thompson, P.L., *The Design of Encroachments on Floodplains Using Risk Analysis*, Hydraulic Engineering Circular No. 17, Federal Highway Administration, Washington, D.C., 1980.
12. Corry, M.L., Jones, J.S., Thompson, P.L., Watts, F.J., and Richards, D.L., *Hydraulic Design of Energy Dissipators for Culverts and Channels*, FHWA, Hydraulic Engineering Circular Number 14 (HEC-14), Chapter 5, 1983, Revised 2006.
13. Federal Highway Administration, *Bridge Scour and Stream Instability Countermeasures: Experience, Selection, and Design Guidance–Third Edition* Hydraulic Engineering Circular No. 23, September 2009.
14. Federal Highway Administration, *Design of Roadside Channels with Flexible Linings*, Hydraulic Engineering Circular No. 15, September 2005.
15. Federal Highway Administration, *Evaluating Scour at Bridges*, HEC 18, 2012.
16. Federal Highway Administration, *Geosynthetic Design and Construction Guidelines*, FHWA-HI-95-038.
17. Federal Highway Administration, *Hydraulic Design of Highway Culverts*, Hydraulic Design Series No. 5, FHWA-NHI-01-020, FHWA, Washington, D.C., 2001, Rev. May 2005.
18. Federal Highway Administration, *Introduction to Highway Hydraulics*, Hydraulic Design Series No. 4, June 2008.
19. Federal Highway Administration, *River Engineering for Highway Encroachments*, Hydraulic Design Series No. 6, December 2001.
20. Federal Highway Administration, *Stream Stability at Highway Structures*, HEC 20, 2012.

21. Federal Highway Administration, *Urban Drainage Design Manual*, Hydraulic Engineering Circular No. 22. FHWA NHI-10-009, U.S. Department of Transportation, Washington, D. C., 2009.
22. Holtz, R.D., Christopher, B.R., and Berg, R.R., *Geosynthetic Design & Construction Guidelines*, Participant Notebook, National Highway Institute, US Department of Transportation, Federal Highway Administration, July 29, 1994 Draft.
23. Ginsburg, A., HY8 *Culvert Analysis Microcomputer Program*, Applications Guide, FHWA, EPD-87-101; and software available from McTrans Center, 512 Weil Hall, University of Florida, Gainsville, FL 32611.
24. McBridge, M.C., and Sternberg, Y.M., *Stormwater Management Infiltration Structures*, Publication No. FHWA-MS-83/04, Baltimore, Md., 1983.
25. Reihsen, G., and Harrison, L.J., *Debris Control Structures*, FHWA, Hydraulic Engineering Circular Number 9 (HEC 9), Washington, DC 20590, 1971, Revised 2005.
26. Ruff, J.F., Abt, S.R., Mendosa, C., Shaikh, A., and Kloberdanz, R., *Scour at Culvert Outlets in Mixed Bed Materials*, FHWA, RD-82-011, September 1982.
27. Sandvik, A., Proportional Weirs for Stormwater Pond Outlets, *Civil Engineering ASCE*, pp. 54-56, March 1985.
28. Schueler, T.R., *Controlling Urban Runoff: A Practical Manual for Planning and Designing Urban BMPs*, Washington, D.C., Metropolitan Washington Council of Governments, 1987.
29. Sowers, G.B. and Sowers, G.F., *Introductory Soil Mechanics and Foundations*, 3rd ed., New York: MacMillan Publishing Company, 1970.
30. Spangler, M.G. and Handy, R.L., *Soils Engineering*, 4th ed., New York: Harper & Row, 1982.
31. Stevens, M.A. and Simons, D.B., *Experimental Programs and Basic Data for Studies of Scour in Riprap at Culvert Outfalls*, Colorado State University, CER 70-7-MAS-DBS-57, 1971.
32. *Stormwater Management Manual – Volume 2 Procedures*, Metropolitan Government of Nashville and Davidson County. The EDGE Group, Inc., and CH2M Hill, July 1988.
33. U.S. Army Corps of Engineers, *Design of Coastal Revetments, Seawalls, and Bulkheads*, Engineering Manual EM-1110-2-1614., April 1985.
34. U.S. Army Corps of Engineers, *HEC-RAS, River Analysis System, User's Manual*, Draft Version 2.2, September 1998.
35. Wong, S.L. and McCuen, R.H., *The Design of Vegetative Buffer Strips for Runoff and Sediment Control in Stormwater Management in Coastal Areas*, Annapolis, Maryland, Department of Natural Resources, 1982.
36. Wycuff, R.L. and Singh, U.P., Preliminary Hydrologic Design of Small Flood Detention Reserviors, *Water Resources Bulletin*, Vol. 12, No. 2, pp. 337-49, 1976.
37. Yim, C.S. and Sternberg, U.M., *Development and Testing of Granular Filter Design Criteria for Stormwater Management Infiltration Structures*, Baltimore, Maryland, Department of Transportation, 1987.

38. Young, G.K. and Krolak J.S., HYDRAIN *Integrated Drainage Design Computer System*, Volumes 1-6, FHWA, RD-88-120, 1987.
39. Yu, S.L., Norris, W.K, and Wyant, D.C., *Urban BMP Demonstration Project of the Albemarle/Charlottesville Area*, Report No. UDA/530358/CZ88/102, Charlottesville, University of Virginia, 1987.

Concrete slabs

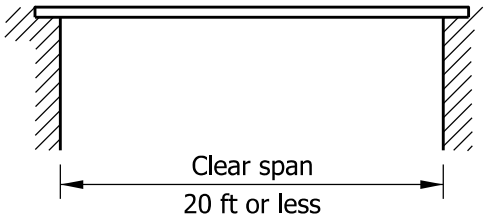

Concrete beams or girders
or steel beams embedded
in the backwall

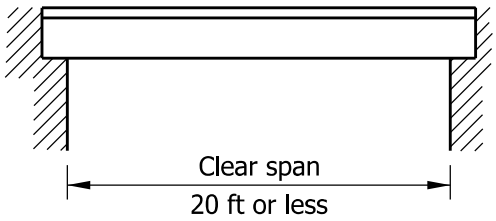

Steel beams or girders or
concrete beams on bearings

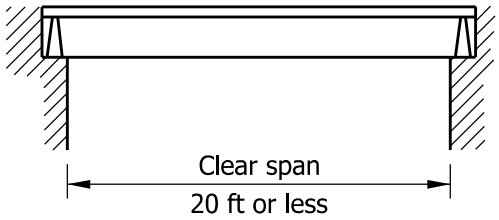

Concrete box culvert at grade or
under fill (one or multi-span)

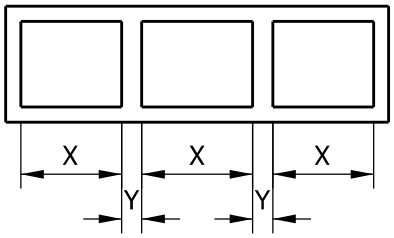

X + Y + X... = 20 ft or less

Metal pipe under fill
(one or multi-span)

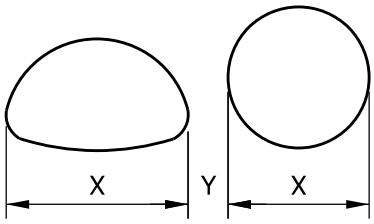

X + Y + X... = 20 ft or less

MAXIMUM SPAN LENGTHS FOR CULVERTS

Figure 203-2A

Back

Structure Application	Minimum Circular-Pipe Size	Minimum Deformed-Pipe Area
Drive	15 in.	1.1 ft^2
Mainline or Public-Road Approach (2 lanes)	15 in.	1.1 ft^2
Mainline or Public-Road Approach (≥ 3 Lanes)	36 in.	6.7 ft^2

MINIMUM PIPE-CULVERT SIZE

Figure 203-2B

Back

Functional Classification	Allowable Backwater, Annual EP	Roadway Serviceability, Annual EP	Service-ability Freeboard *	Bridge, Allowable Velocity, Annual EP	Culvert, Allowable Velocity, Annual EP
Freeway	1%	1%	2 ft	1%	2%
Ramp	1%	1%	0 ft	1%	2%
Non-Freeway, 4 or More Lanes	1%	1%	2 ft	1%	2%
Two-Lane Facility, AADT > 3000	1%	1%	1 ft	1%	2%
Two-Lane Facility, 1000 < AADT ≤ 3000	1%	4%	0 ft	1%	4%
Two-Lane Facility, AADT ≤ 1000	1%	10%	0 ft	1%	10%
Drive	1%	10%	0 ft	1%	10%

* Required serviceability freeboard is based on the difference between the edge-of-pavement and the structure-headwater elevations throughout the floodplain or watershed. Roadway serviceability should consider backwater effects from a larger downstream waterway.

DESIGN-STORM FREQUENCY
FOR BRIDGE OR CULVERT

Figure 203-2C
(Page 1 of 2)

Back

Functional Classification	Backwater Design Storm, Annual EP	Roadway Serviceability, Annual EP	Service-ability Freeboard *	Allowable Velocity, Annual EP
Freeway	1%	4%	0 ft	10%
Non-Freeway, 4 or More Lanes	1%	10%	0 ft	10%
Two-Lane Facility, AADT > 3000	1%	10%	0 ft	10%
Two-Lane Facility, 1000 < AADT ≤ 3000	1%	50%	0 ft	50%
Two-Lane Facility, AADT ≤ 1000	1%	50%	0 ft	50%

* Required serviceability freeboard is based on the difference between the edge-of-pavement and the structure-headwater elevations throughout the floodplain or watershed. Roadway serviceability should consider backwater effects from a larger downstream waterway.

DESIGN-STORM FREQUENCY
FOR TEMPORARY STRUCTURE

Figure 203-2C
(Page 2 of 2)

Back

Erosion-Protection Method	Velocity, v (ft/s)
Revetment Riprap	≤ 6.5
Class 1 Riprap	$6.5 < v < 10$
Class 2 Riprap	$10 \leq v \leq 13$
Energy Dissipator	> 13

Note: If clear-zone or other issues prohibit the use of the required erosion-protection method, the Office of Hydraulics should be contacted for additional instructions.

STREAM VELOCITY FOR EROSION PROTECTION

Figure 203-2D

Back

Structure Diameter or Span, S (ft)	Sump Required for Stream Bed of Sand (in.)	Sump Required for Stream Bed of Other Soil (in.)	Sump Required for Stream Bed of Rock or Till (in.)
< 4	6	3	3
$4 \leq S < 12$	12	6	3
$12 \leq S < 20$	18	12	3

PIPE- OR BOX-STRUCTURE SUMP REQUIREMENT

Figure 203-2E

Back

Type of Conduit	Wall Description	Manning's *n*
Concrete Pipe	Smooth Interior	0.012
Concrete Box	Smooth Walls	0.012- 0.015
Corrugated Metal Pipe or Arch, Annular or Helical Pipe	2.75 in. x 0.5 in Corrugations 6 in. x 1 in. corrugations 5 in. x 1 in. corrugations 3 in. x 1 in. corrugations 6 in. x 2 in. structural plate 9.25 in. x 2.5 in. structural plate	0.024 0.022-0.025 0.025-0.026 0.027-0.028 0.033-0.035 0.033-0.037
Spiral Rib Metal Pipe	Semi-Smooth Interior	0.015
Thermoplastic/HDPE Pipe	Smooth Interior	0.012
Cured in Place Liner (CIPP)	Smooth Interior	0.012

Note: The value indicated in this table is the recommended Manning's n design value. The actual field value for an older, existing pipeline may vary depending on the effects of abrasion, corrosion, deflection and joint conditions. A concrete pipe with poor joints and deteriorated walls may have an n value of 0.014 to 0.018. A corrugated metal pipe with joint and wall problems may also have a higher n value, and may experience shape changes which can adversely affect the general hydraulics characteristics of the culvert.

RECOMMENDED MANNING'S *n* VALUE FOR CULVERTS

Figure 203-2F

Back

AREA RATIO	FREQUENCY FOR COINCIDENTAL OCCURRENCE			
	10% EP		1% EP	
	MAIN STREAM	TRIBUTARY	MAIN STREAM	TRIBUTARY
10 000 to 1	1 10	10 1	2 100	100 2
1000 to 1	2 10	10 2	10 100	100 10
100 to 1	5 10	10 5	25 100	100 25
10 to 1	10 10	10 10	50 100	100 50
1 to 1	10 10	10 10	100 100	100 100

Source: *HEC-22*, Table 7-3.

JOINT PROBABILITY ANALYSIS

Figure 203-2G

Back

Type of Structure and Design of Entrance	Coefficient K_E
Pipe, Concrete	
Mitered to conform to fill slope	0.7
*End-Section conforming to fill slope	0.5
Projecting from fill, square cut end	0.5
Headwall or headwall and wingwalls,	
Square-edged	0.5
Rounded, radius = 1/12*D*	0.2
Socket end of pipe, grooved	0.2
Projecting from fill, socket end, grooved	0.2
Beveled edges, 33.7-deg or 45-deg bevels	0.2
Side- or slope-tapered inlet	0.2
Pipe or Pipe-Arch, Corrugated Metal	
Projecting from fill with no headwall	0.9
Mitered to conform to fill slope, paved or unpaved slope	0.7
Headwall or headwall and wingwalls, square-edged	0.5
*End-section conforming to fill slope	0.5
Beveled edges, 33.7-deg or 45-deg bevels	0.2
Side- or slope-tapered inlet	0.2
Box, Reinforced Concrete	
Wingwalls parallel, extension of sides,	
Square-edged at crown	0.7
Wingwalls at 10 deg to 25 deg, or 30 deg to 75 deg to barrel,	
Square-edged at crown	0.5
Headwall parallel to embankment without wingwalls,	
Square-edged on 3 edges	0.5
Rounded on 3 edges to radius of 1/12 barrel dimension, or beveled edges on 3 sides	0.2
Wingwalls at 30 deg to 75 deg to barrel,	
Crown edge rounded to radius of 1/12 barrel dimension, or beveled top edge	0.2
Side- or slope-tapered inlet	0.2

* *An end section conforming to the fill slope, made of either metal or concrete, is the section commonly available from manufacturers. From limited hydraulic tests, it is equivalent in operation to a headwall in both inlet and outlet control. An end section incorporating a closed taper in its design may have a superior hydraulic performance. Such a section can be designed using the information shown for the beveled inlet.*

ENTRANCE-LOSS COEFFICIENT
Outlet Control, Full or Partly Full

Figure 203-2H

Back

End-Treatment Type	Entrance Type	K_E
Grated Box End Section, Type 1	Concrete Pipe, headwall with square edge	0.5
Grated Box End Section, Type 2	Concrete Pipe, headwall with square edge	0.5
Multiple-Pipes Concrete Anchor	Concrete Pipe, projecting from fill, square cut end	0.5
Multiple-Pipes Concrete Anchor	Corrugated Metal Pipe, Projecting from fill	0.9
Metal Pipe End Section	Corrugated Metal Pipe, end section conforming to fill slope	0.5
Precast-Concrete End Section	Concrete Pipe, end section conforming to fill slope	0.5
Safety Metal End Section	Corrugated Metal Pipe, mitered to conform to fill slope	0.7
Safety Metal End Section	Corrugated Metal Pipe, end section conforming to fill slope	0.5
Safety Metal End Section	Corrugated Metal Pipe, mitered to conform to fill slope	0.7
Safety Metal End Section	Corrugated Metal Pipe, end section conforming to fill slope	0.5
Single-Pipe Concrete Anchor	Corrugated Metal Pipe, projecting from fill	0.9
Single-Pipe Concrete Anchor	Concrete Pipe, projecting from fill, square cut end	0.5
Single-Pipe Concrete Anchor	Corrugated Metal Pipe-Arch, projecting from fill	0.9
Multiple-Pipe Concrete Anchor	Concrete Pipe-Arch, projecting from fill, square cut end	0.5
Multiple-Pipe Concrete Anchor	Corrugated Metal Pipe-Arch, projecting from fill	0.9

ENTRANCE-LOSS COEFFICIENT, K_E,
FOR STANDARD CULVERT

Figure 203-2 I

Back

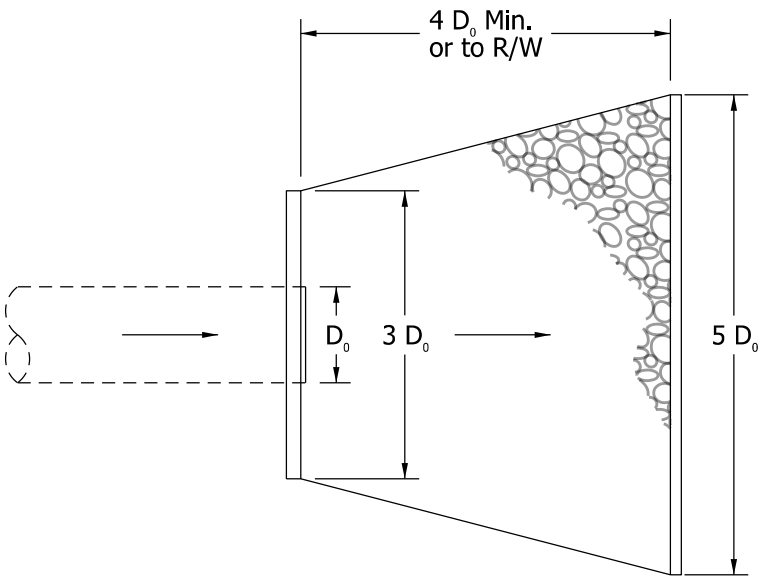

D_0 = Outside Diameter of structure

MINIMUM RIPRAP APRON DIMENSIONS

Figure 203-2J

Back

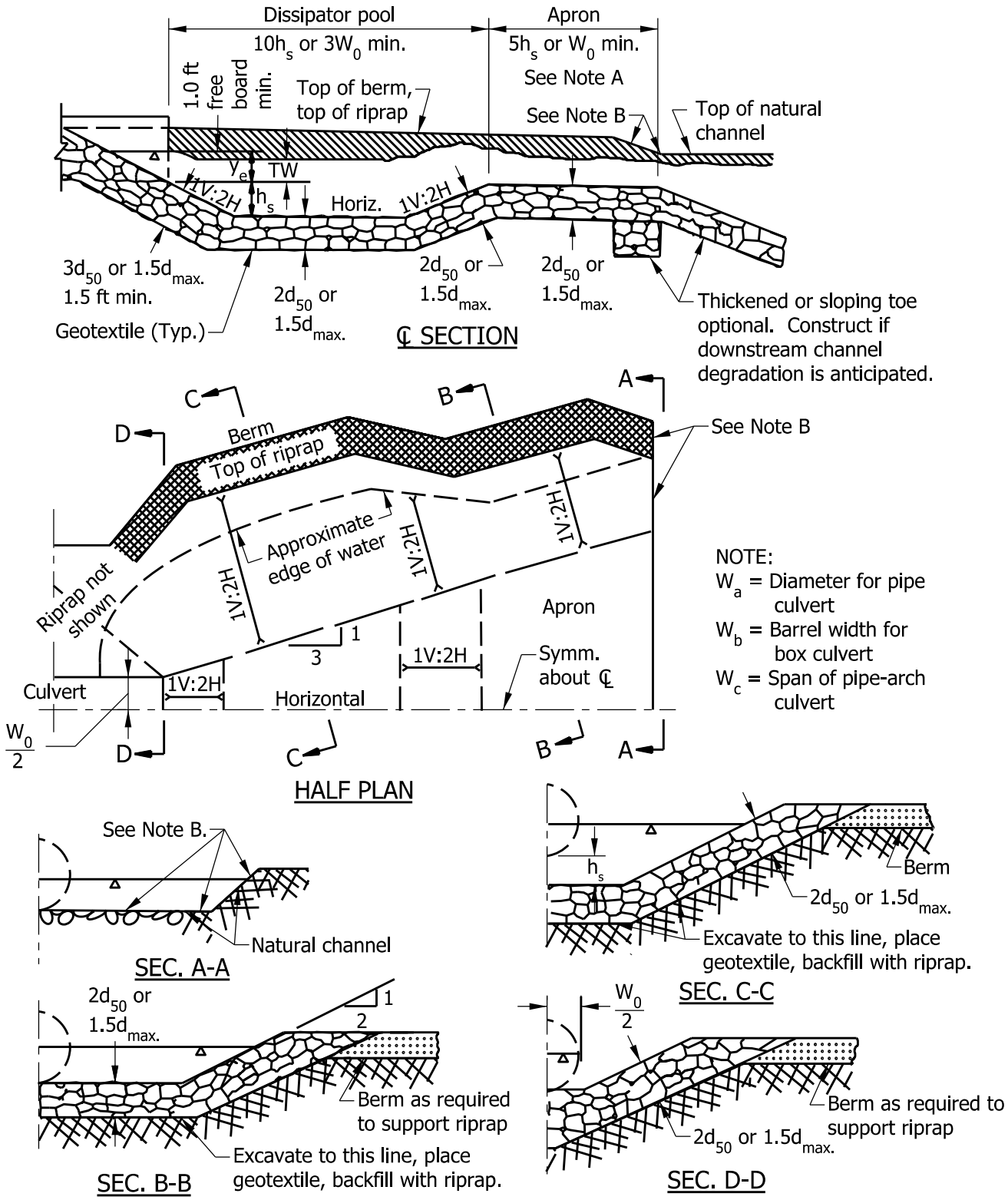

NOTE A: If exit velocity of basin is specified, extend basin as requried to obtain sufficient cross-sectional area at Section A-A such that Q_{des} / (Cross section area at Sec. A-A) = Specified exit velocity.

NOTE B: Warp basin to conform to natural stream channel. Top of riprap in floor of basin should be at the same elevation or lower than natural channel bottom at Sec. A-A.

DETAILS OF RIPRAP BASIN ENERGY DISSIPATOR
Figure 203-2K

Back

RIPRAP BASIN CHECKLIST

Route | Project No.

Designer | Date

Reviewer | Date

DESIGN VALUES (*IDM* Figure 203-2M)	TRIAL 1	FINAL TRIAL
Equivalent Depth, d_E		
D_{50}/d_E		
D_{50}		
Froude No., Fr		
h_S/d_E		
h_S		
h_S/D_{50}		
$2 < h_S/D_{50} < 4$		

BASIN DIMENSIONS		FEET	
Pool length is the larger of:	$10h_S$		
	$3W_o$		
Basin length is the larger of:	$15h_S$		
	$4W_o$		
Approach Thickness	$3D_{50}$		
Basin Thickness	$2D_{50}$		

TAILWATER CHECK	
Tailwater, TW	
Equivalent depth, d_E	
TW/d_E	
IF $TW/d_E > 0.75$, calculate riprap downstream using *IDM* Figure 203-2N	
$D_E = (4A_c/\pi)^{0.5}$	

DOWNSTREAM RIPRAP (*IDM* Figure 203-2N)				
L/D_E	L	V_L/V_o	V_L	D_{50}

RIPRAP BASIN CHECKLIST

Figure 203-2L

Back

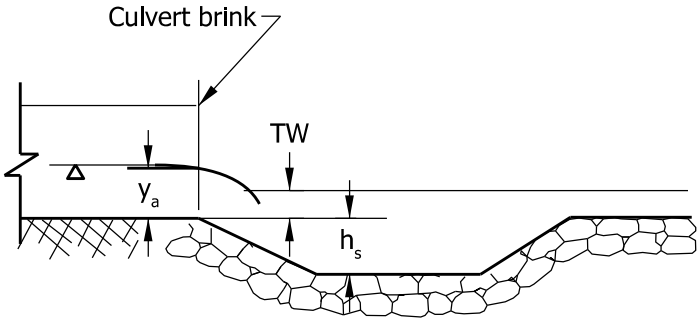

$$v_{ave} = \frac{\text{Design discharge (Q)}}{\text{Wetted area at brink of culvert}}$$

d_{50} = Median size of rock by weight, rounded rock or angular rock

y_a = Equivalent brink depth
= Brink depth for box culvert
= $(A/2)^{0.5}$ for non-rectangular sections

℄ SECTION

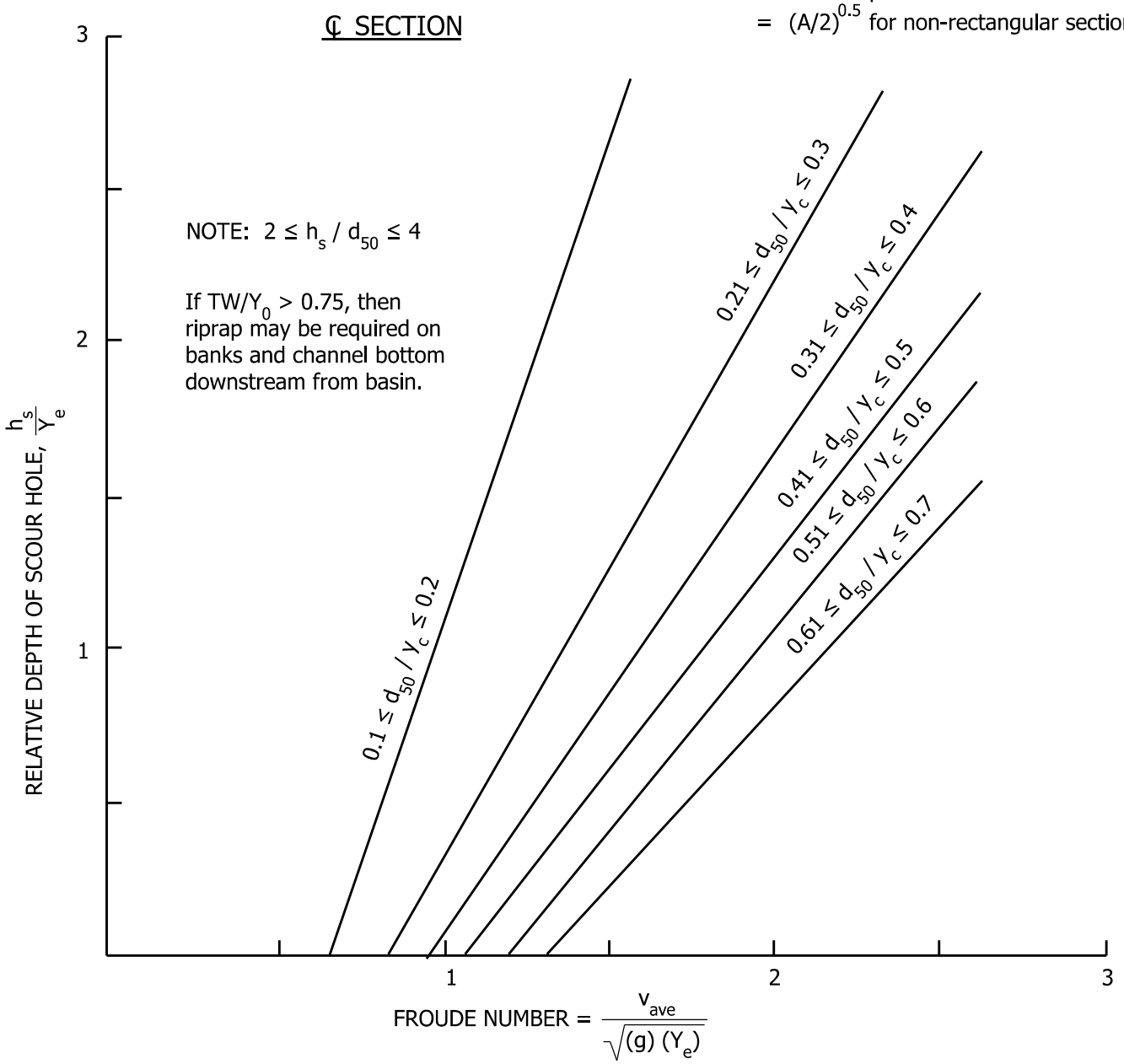

RIPRAP BASIN DEPTH OF SCOUR

Figure 203-2M

Back

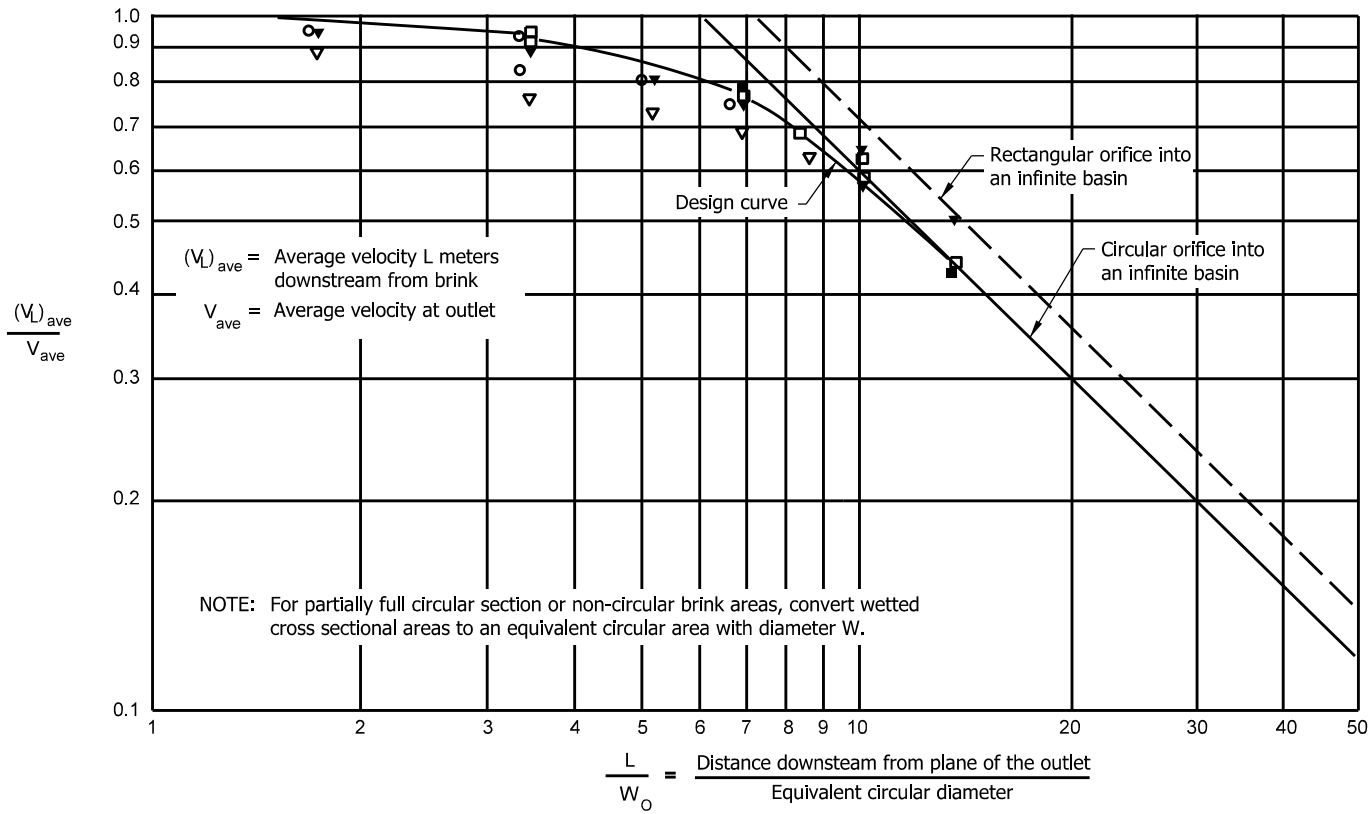

SYM	W_O (ft)	Q (ft^3/s)	V_{ave} (ft/s)	TW (ft)
□	1.44	23	15.09	1.61
□	1.44	14	10.30	1.61
○	3.08	65	9.29	3.08
●	3.08	84	11.91	3.08
▽	1.44	21	14.01	1.25
▽	1.44	14	9.29	1.25

NOTE: To be used for predicting channel velocities downstream from culvert outlets where high tailwater prevails.

DISTRIBUTION OF CENTERLINE VELOCITY FLOW FROM SUBMERGED OUTLETS

Figure 203-2N

Back

RISE	4 ft		5 ft		6 ft		7 ft		8 ft	
PERP. SPAN	Wt., T / ft	Lgth., ft	Wt., T / ft	Lgth., ft	Wt., T / ft	Lgth., ft	Wt., T / ft	Lgth., ft	Wt, T / ft	Lgth., ft
13 ft	2.00	6	3.15	6	3.30	6	3.45	6	3.60	6
14 ft	3.15	6	3.30	6	3.45	6	3.60	6	3.75	5
15 ft	3.30	6	3.45	6	3.60	6	3.75	5	3.90	5
16 ft	3.45	6	3.60	6	3.75	5	3.90	5	4.05	5
17 ft	3.60	6	3.75	5	3.90	5	4.05	5	4.20	5
18 ft	3.75	5	3.90	5	4.05	5	4.20	5	4.35	5
19 ft	3.90	5	4.05	5	4.20	5	4.35	5	4.50	4
20 ft	4.05	5	4.20	5	4.35	5	4.50	4	4.65	4

OVERSIZE-BOX-CULVERT SEGMENTS WEIGHT AND LENGTH

Figure 203-2 O

Back

Case	Freeboard Specified	Acceptable Structure Alternates to be Shown on Plans
1	≥ 1 ft	Flat-topped, arch-topped, true-arch
2	< 1 ft	Those indicated in hydraulics recommendation letter

DETERMINATION OF ACCEPTABLE
THREE-SIDED-STRUCTURE ALTERNATES

Figure 203-2P

Back

Feet	Inches	Feet	Inches
12	144	24	288
13	156	25	300
14	168	26	312
15	180	27	324
16	192	28	336
17	204	29	348
18	216	30	360
19	228	32	384
20	240	34	408
21	252	36	432
22	264	42	504
23	276	48	576

THREE-SIDED STRUCTURE
PERPENDICULAR-SPAN DESIGNATIONS

Figure 203-2Q

Back

Feet	Inches	Feet	Inches
4	48	10’-4”	124
5	60	10’-8”	128
6	72	11’	132
7	84	11’-4”	136
8	96	11’-8”	140
9	108	12	144
10	120	---	---

THREE-SIDED-STRUCTURE RISE DESIGNATIONS

Figure 203-2R

Back

MIN. AVG. STREAM VELOCITY ft/s	MAX. AVG. STREAM VELOCITY ft/s	RIPRAP AT STR.	RIPRAP AT OUTSIDE CURVED BEND IN CHANNEL	BASE-SLAB CONCRETE AT STR.
n/a	≤ 6.5	Revetment	Class 1	n/a
> 6.5	< 10	Class 1	Class 2	n/a
≥ 10	< 13	Class 2	Base Slab	Class B
≥ 13	n/a	Base Slab	Base Slab	Class B

Note: The maximum average stream velocity at the structure can occur at a lesser event than the design storm if roadway overtopping is present during the design storm.

SCOUR PROTECTION OF CHANNEL
AT THREE-SIDED STRUCTURE

Figure 203-2S

Back

Type of Channel and Description	Minimum	Normal	Maximum
EXCAVATED OR DREDGED			
1. Earth, Straight and Uniform	0.016	0.018	0.020
a. Clean, recently completed	0.018	0.022	0.025
b. Clean, after weathering	0.022	0.025	0.030
c. Gravel, uniform section, clean	0.022	0.027	0.033
2. Earth, Winding and Sluggish			
a. No vegetation	0.023	0.025	0.030
b. Grass, some weeds	0.025	0.030	0.033
c. Dense weeds or aquatic plants in deep channel	0.030	0.035	0.040
d. Earth bottom and rubble sides	0.025	0.030	0.035
e. Stony bottom and weedy sides	0.025	0.035	0.045
f. Cobble bottom and clean sides	0.030	0.040	0.050
3. Dragline, Excavated or Dredged			
a. No vegetation	0.025	0.028	0.033
b. Light brush on banks	0.035	0.050	0.060
4. Rock Cut			
a. Smooth and uniform	0.025	0.035	0.040
b. Jagged and irregular	0.035	0.040	0.050
5. Channel Not Maintained, Weeds and Brush Uncut			
a. Dense weeds, high as flow depth	0.050	0.080	0.120
b. Clean bottom, brush on sides	0.040	0.050	0.080
c. Clean bottom, highest stage of flow	0.045	0.070	0.110
d. Dense brush, high stage	0.080	0.100	0.140
NATURAL STREAM			
1. Minor Stream (top width at flood stage < 100 ft)			
a. Stream on plain			
(1) Clean, straight, full stage, no rifts or deep pools	0.025	0.030	0.033
(2) Same as above, but more stones or weeds	0.030	0.035	0.040
(3) Clean, winding, some pools or shoals	0.033	0.040	0.045
(4) Same as above, but some weeds or stones	0.035	0.045	0.050
(5) Same as above, lower stages, more ineffective slopes and sections	0.040	0.048	0.055
(6) Same as (4), but more stones	0.045	0.050	0.060
(7) Sluggish reaches, weedy, deep pools	0.050	0.070	0.080
(8) Very weedy reaches, deep pools, or floodway with heavy stand of timber and underbrush	0.075	0.100	0.150

Back

Type of Channel and Description	Minimum	Normal	Maximum
NATURAL STREAM (contd.)			
1. Minor Stream (contd.)			
b. Mountain stream, no vegetation in channel, banks usually steep, trees and brush along banks submerged at high stages			
(1) Bottom: gravel, cobbles, and few boulders	0.030	0.040	0.050
(2) Bottom: cobbles with large boulders	0.040	0.050	0.07
2. Floodplain			
a. Pasture, no brush			
(1) Short grass	0.025	0.030	0.035
(2) High grass	0.030	0.035	0.050
b. Cultivated area			
(1) No crop	0.020	0.030	0.040
(2) Mature row crops	0.025	0.035	0.045
(3) Mature field crops	0.030	0.040	0.050
c. Brush			
(1) Scattered brush, heavy weeds	0.035	0.050	0.070
(2) Light brush and trees, in winter	0.035	0.050	0.060
(3) Light brush and trees, in summer	0.040	0.060	0.080
(4) Medium to dense brush, in winter	0.045	0.070	0.110
(5) Medium to dense brush, in summer	0.070	0.100	0.160
d. Trees			
(1) Dense willows, in summer, straight	0.110	0.150	0.200
(2) Cleared land with tree stumps, no sprouts	0.030	0.040	0.050
(3) Same as above, but with heavy growth of sprouts	0.050	0.060	0.080
(4) Heavy stand of timber, a few downed trees, little undergrowth, flood stage below branches	0.080	0.100	0.120
(5) Same as above, but with flood stage reaching branches	0.100	0.120	0.160
3. Major Stream (top width at flood stage > 100 ft). The *n* value is less than that for a minor stream of similar description, because banks offer less effective resistance.			
a. Regular section with no boulders or brush	0.025	n/a	0.060
b. Irregular and rough section	0.035	n/a	0.100

Source: Chow, V.T.

VALUES OF MANNING'S *n* FOR UNIFORM FLOW, Figure 203-3A

Back

Type	Minimum Thickness	
	Abutment	**Pier**
Revetment	1.5 ft	2.0 ft
Class 1	2.0 ft	3.0 ft
Class 2	2.5 ft	4.0 ft

Riprap-Lay Thickness

Note: The thickness is measured such that the top is at the ground elevation.

Substructure Type	Lay Width
Sloping Abutment	The cone is covered top to toe, a square toe trench is placed below the riprap, based on lay thickness.
Vertical Abutment	2 times the water depth or a minimum of 10 ft
Pier	2 times the pier width or a minimum of 6 ft. The lay width is from the outside wall of the pier, all the way around.

Riprap-Lay Width

Note: For an oversized-box or three-sided structure, see the INDOT *Standard Drawings*.

RIPRAP SCOUR PROTECTION

Figure 203-3B

Back

Hydraulics QA Checklist

Route: Des No.
County: City or Town:
Description:
Designer: Reviewer:

MAPS

- ☐ USGS Quad. Scale Date
- ☐ ARC GIS Date
- ☐ Flood-Insurance Firm and FHBM
- ☐ Soils Map
- ☐ Aerial Photos Scale Date

STUDIES BY EXTERNAL AGENCIES

- ☐ FEMA Flood-Insurance Studies
- ☐ NRCS Watershed Studies
- ☐ USGS Gages and Studies
- ☐ Interim Floodplain Studies

STUDIES BY INTERNAL SOURCES

- ☐ Office Records
- ☐ Flood Record (High Water, Newspaper)
- Gaging Da
- ☐ **BRIDGE INSPECTION REPORTS**

CALIBRATION OF HIGH-WATER DATA

- ☐ Discharge and Frequency of H.W. el.
- ☐ Influences Responsible for H.W. el. - Check Maps for Larger Streams Nearby that May Backwater the Site
- ☐ Analyze Hydraulic Performance of Existing Facility for 100-Year Flood
- ☐ Analyze Hydraulic Performance of Proposed Facility for 100-Year Flood
- ☐ Field Reconnaissance Revisions Report

DESIGN APPURTENANCES

- ☐ Dissipators, Riprap
- ☐ Scour Analysis/Evaluation

TECHNICAL RESOURCES

- ☐ *Indiana Design Manual*, Part II
- ☐ Other _____

DISCHARGE CALCULATIONS

- ☐ Drainage Area Delineation
- ☐ Drainage Areas of IN Streams
- ☐ DNR Discharge Letter
- ☐ Rational Formula
- ☐ HEC-HMS / TR-20
- ☐ NRCS
- ☐ Regional Analysis
- ☐ Coordinated Discharges of IN Streams
- ☐ Log-Pearson Type III Gage Rating

HIGH-WATER ELEVATIONS

- ☐ INDOT Survey
- ☐ Plans for Existing Structure
- ☐ DNR Historic Flood Profiles
- ☐ Maintenance Records
- ☐ External Sources
- ☐ Personal Reconnaissance

ENVIRONMENTAL REPORTS

☐ INDOT

TECHNICAL AIDS

☐ *Indiana Design Manual*, Part II
☐ INDOT and FHWA Directives
☐ FHWA Publications

COMPUTER PROGRAMS

☐ HY8
☐ HEC-RAS River Analysis System
☐ Log-Pearson Type III Analysis
☐ WSPRO Water-Surface Profile
☐ PFP-HYDRA
☐ HEC-HMS / TR 20
☐ HEC-RAS Scour Analysis

☐ Other_____

Designed by:_____ **Date:_____**

Reviewed by:_____ **Date:_____**

Hydraulics QA Checklist

(Continued)

Back

Type of Facility	Design Frequency	Allowable Spread, *T*
Freeway	2% Annual EP	Edge of travel lane
Non-Freeway, ≥ 4 Lanes	10 % Annual EP	Across one-half travel lane
Two-Lane Facility	10 % Annual EP	4 ft onto travel lane
Bridge Deck, Non-Freeway $V \geq 50$ mph $V < 50$ mph	10 % Annual EP 10% Annual EP	Edge of travel lane 3 ft onto travel lane
Ramp $V \geq 50$ mph $V < 50$ mph	10% Annual EP 10% Annual EP	Edge of travel lane 3 ft onto travel lane

Note:Consideration for a 2% annual EP storm event should be used when in a depressed area. See Section 203-4.04(10)

DESIGN FREQUENCY AND ALLOWABLE WATER SPREAD

Figure 203-4A

Back

Str.	Type	Casting Types												
		2	3	4	5	6	7	8	10	12	12A	13	14	15
Catch Basin	A	X	X					X						
	D					X								
	E						X							
	J								X					
	K								X					
	S												X	
	W [1]	X	X					X						
Inlet	A	X	X					X						
	B													X
	C													X
	D					X								
	E						X							
	F						X							
	G						X							
	H, HA				X									
	J								X					
	M								X					
	N									X				
	P										X			
	R											X		
	S												X	
	T												X	
Manhole	A	X		X				X						
	B	X		X				X						
	C [2]	X		X				X						
	D	X		X				X						
	E	X		X				X						
	F	X		X				X						
	G	X		X				X						
	H	X		X				X						
	J	X		X				X						
	K	X		X				X						
	L	X		X				X						
	M	X		X				X						
	N	X		X				X						

Notes: [1] May be substituted for catch basin type A.
[2] May be substituted for manhole type A or B.

COMPATIBILITY OF DRAINAGE STRUCTURES AND CASTINGS

Figure 203-4B

Back

Type of Gutter or Pavement	Manning's *n*
Concrete gutter, troweled finish	0.012
Asphalt Pavement	
Smooth texture	0.013
Rough texture	0.016
Concrete gutter-asphalt pavement	
Smooth	0.013
Rough	0.015
Concrete pavement	
Float finish	0.014
Broom finish	0.016

Notes: 1. For a gutter with a small slope where sediment may accumulate, increase *n* value by 0.002.

2. Reference: *USDOT, FHWA, HDS-3* (1961)

MANNING'S *n* FOR STREET OR PAVEMENT GUTTER

Figure 203-4C

Back

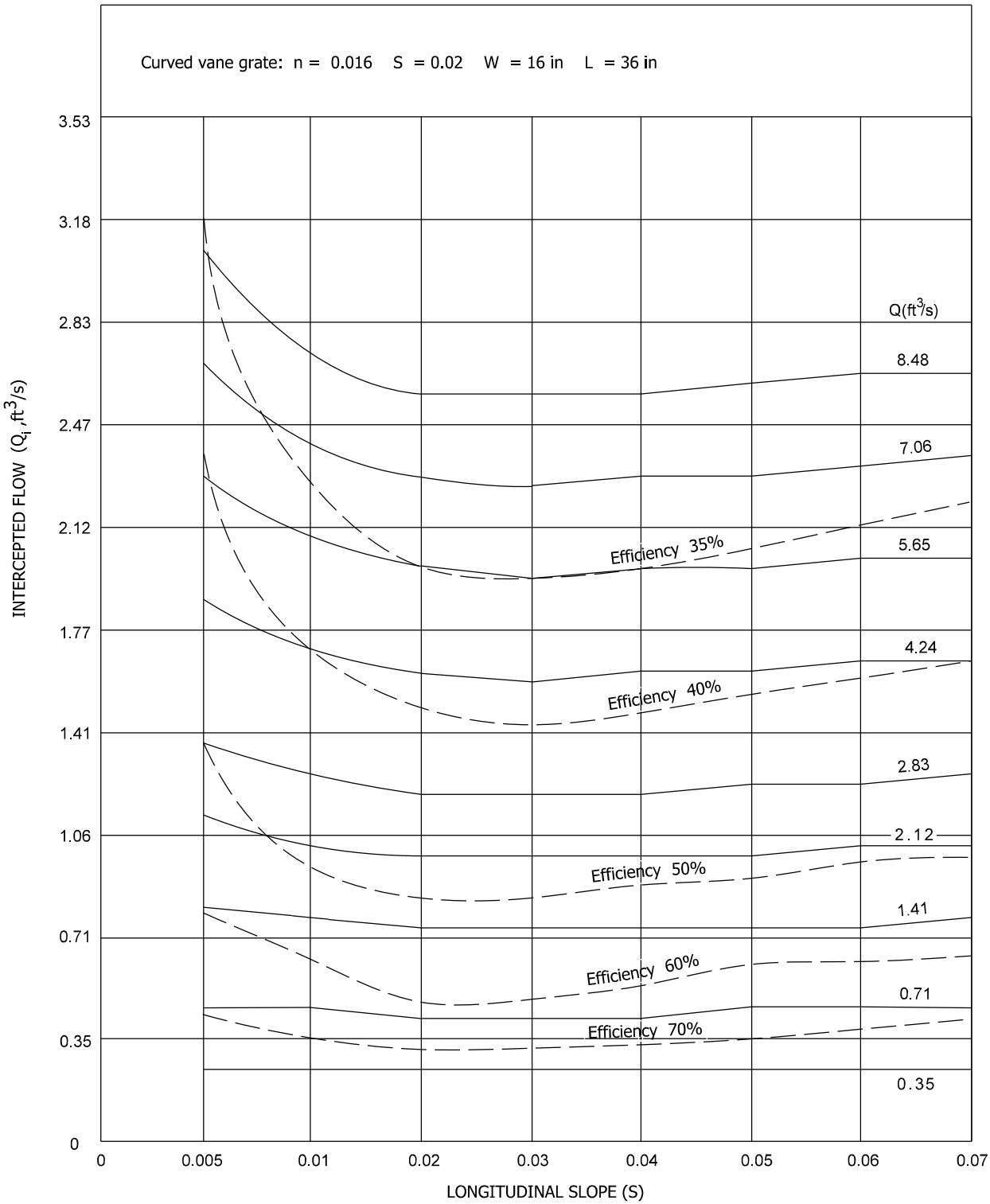

INLET CAPACITY CHART (CURVED VANE GRATE)

FIGURE 203-4D

Back

ROUTE: _____ PROJECT: _____ COMPUTED BY: _____ DATE: _____ SHEET ____ OF ____

LOCATION		GUTTER DISCHARGE Design Frequency: _____					GUTTER DISCHARGE Allowable Spread: _____								INLET DISCHARGE			REMARKS
Inlet No.	Station	Drain Area A (ac)	Run-off Coef. C	Time of Conc. T_C (min.)	Rain Inten-sity, I (in./h)	Q = .002 – 78 x CIA (cfs)	Grade S_o (ft/ft)	Cross Slope S_x (ft/ft)	Prev. Run-by (cfs)	Total Gutt. Flow (cfs)	Depth d T/W (ft)	Gutt. Width W (ft)	Sprd. T (ft)	W/T	Inlet Type	Inter-cept Q_i (cfs)	Run-by Q_r (cfs)	
1	2	3	4	5	6	7	8	9	10	11	12	13	14	15	16	17	18	19

INLET SPACING COMPUTATION SHEET

Figure 203-4E

Back

Manhole Type	Manhole Inside-Dia. Dimension (in.)	Maximum Trunkline Pipe Size (in.)	Minimum Trunkline Pipe Size (in.)
A	48 dia.	24	12
B	36 dia.	18	12
C	49 dia.	24	12
D	58 x 74	42	27
E	80 x 74	60	48
F	108 x 74	84	66
G	136 x 74	108	90
H	49 dia.	36	24
J	62 dia.	36	24
K	74 dia.	48	36
L	98 dia.	54	48
M	104 dia.	72	54
N	110 dia.	84	72

MANHOLE TYPES

Figure 203-4F

Back

Speed (mph)	20	25	30	35	40	45	50	55	60	62	65	70
d↓ *K*→	20	30	40	50	70	90	110	130	160	167	180	220
0.1	20	24	28	32	37	42	47	51	57	58	60	66
0.2	28	35	40	45	53	60	66	72	80	82	85	94
0.3	35	42	49	55	65	73	81	88	98	100	104	115
0.4	40	49	57	63	75	85	94	102	113	116	120	133
0.5	45	55	63	71	84	95	105	114	126	129	134	148
0.6	49	60	69	77	92	104	115	125	139	142	147	162
0.7	53	65	75	84	99	112	124	135	150	153	159	176
0.8	57	69	80	89	106	120	133	144	160	163	170	188

Notes:

1. $x = (200dK)^{0.5}$, where x = distance from the low point to flanking inlet, ft, and
   d = depth at curb, ft
   Maximum K for drainage = 170 (ft/%A) for a curbed facility.
2. $K = L/A$, where L = length of vertical curve, ft, and A = algebraic difference in approach grades, %.
   Reference: *HEC 12 Chapter 9* (modified).

FLANKING-INLET LOCATIONS

Figure 203-4G

Back

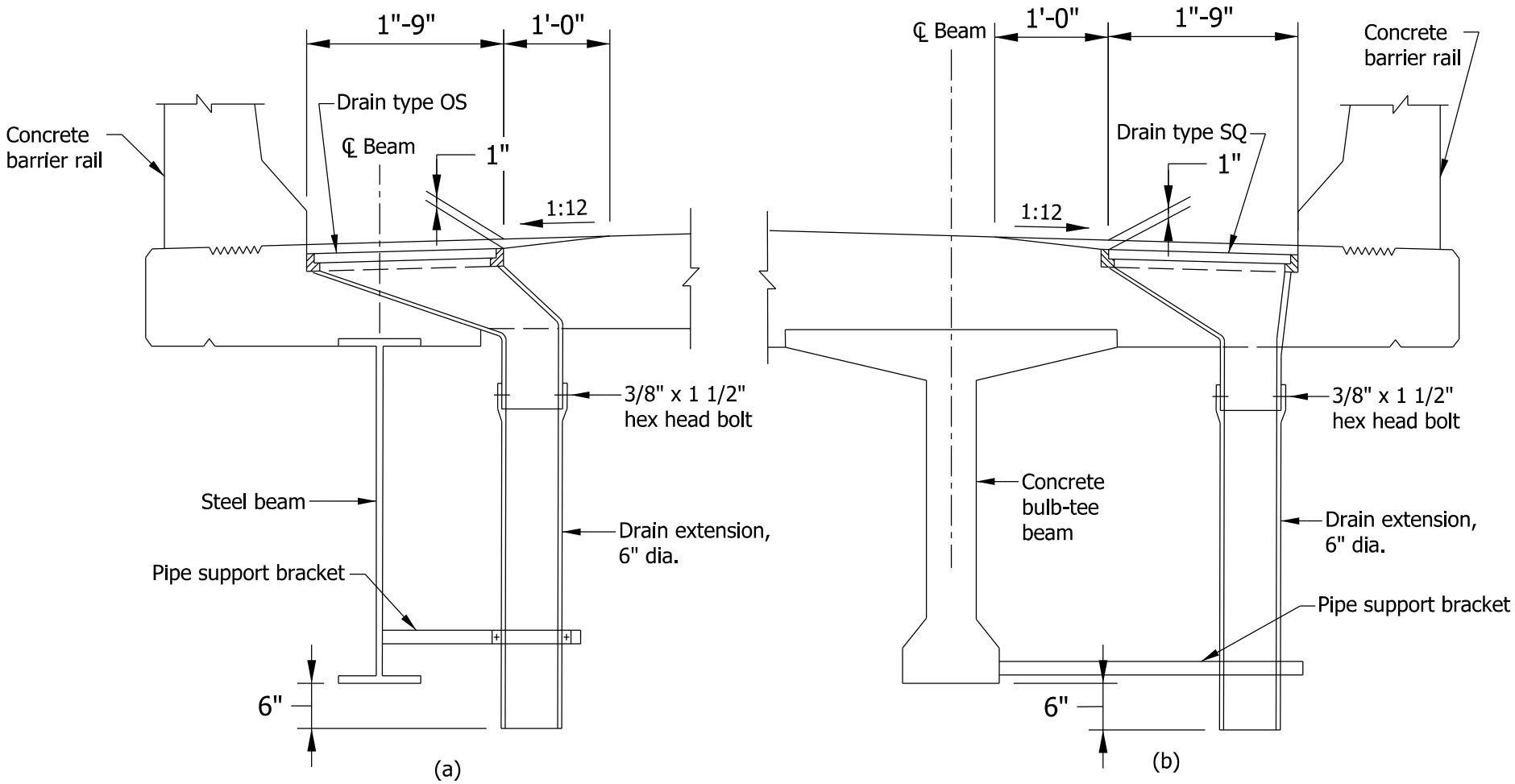

NOTE: If possible, drain extension to be placed such that runoff cannot directly enter the stream.

TYPICAL FLOOR DRAIN SECTIONS

Figure 203-4H

Back

Route _____ Section _____ County _____
Computed _____ Date _____
Checked _____ Date _____

Station	Length (ft)	Drainage Area A (ac)		Runoff Coefficient C	(A)(C)		Flow Time (min)		Rainfall Intensity I (in./h)	Total Runoff 0.00278CIA = Q (cfs)	Diameter Pipe (in.)	Capacity Fill (cfs)	Velocity (ft/s)		Invert Elev.		Manhole Invert Drop	Slope of Drain (ft/ft)
		Increment	Total		Increment	Total	To Upper End	In Section					Flowing Full	Design Flow	Upper End	Lower End		

STORM DRAIN COMPUTATION SHEET

Figure 203-4 I

Back

Storm Durations for 1% Annual EP	Inflow Rates (cfs)	Outflow Rates (cfs)	Peak Water Surface Elevations (ft)	Peak Volumes (ft^3)
1% Annual EP - 0.25 hr				
1% Annual EP - 0.5 hr				
1% Annual EP - 1 hr				
1% Annual EP - 2 hr				
1% Annual EP - 3 hr				
1% Annual EP - 6 hr				
1% Annual EP - 12 hr				
1% Annual EP - 24 hr				

SUMMARY PERFORMANCE TABLE FOR STORAGE

Figure 203-5A

Back

Material	Manning's *n*	Maximum Allowable Velocity (ft/s)
Fine Sand	0.20	2.5
Sandy Loam	0.20	2.5
Silty Loam	0.20	3.0
Clay Loam	0.20	3.6
Clay	0.20	5.0
Silty Clay	0.20	5.0
Shale	0.20	6.0
Fine Gravel	0.20	5.0
Coarse Gravel	0.25	6.0

MAXIMUM VELOCITY IN A DRAINAGE DITCH

Figure 203-6A

Back

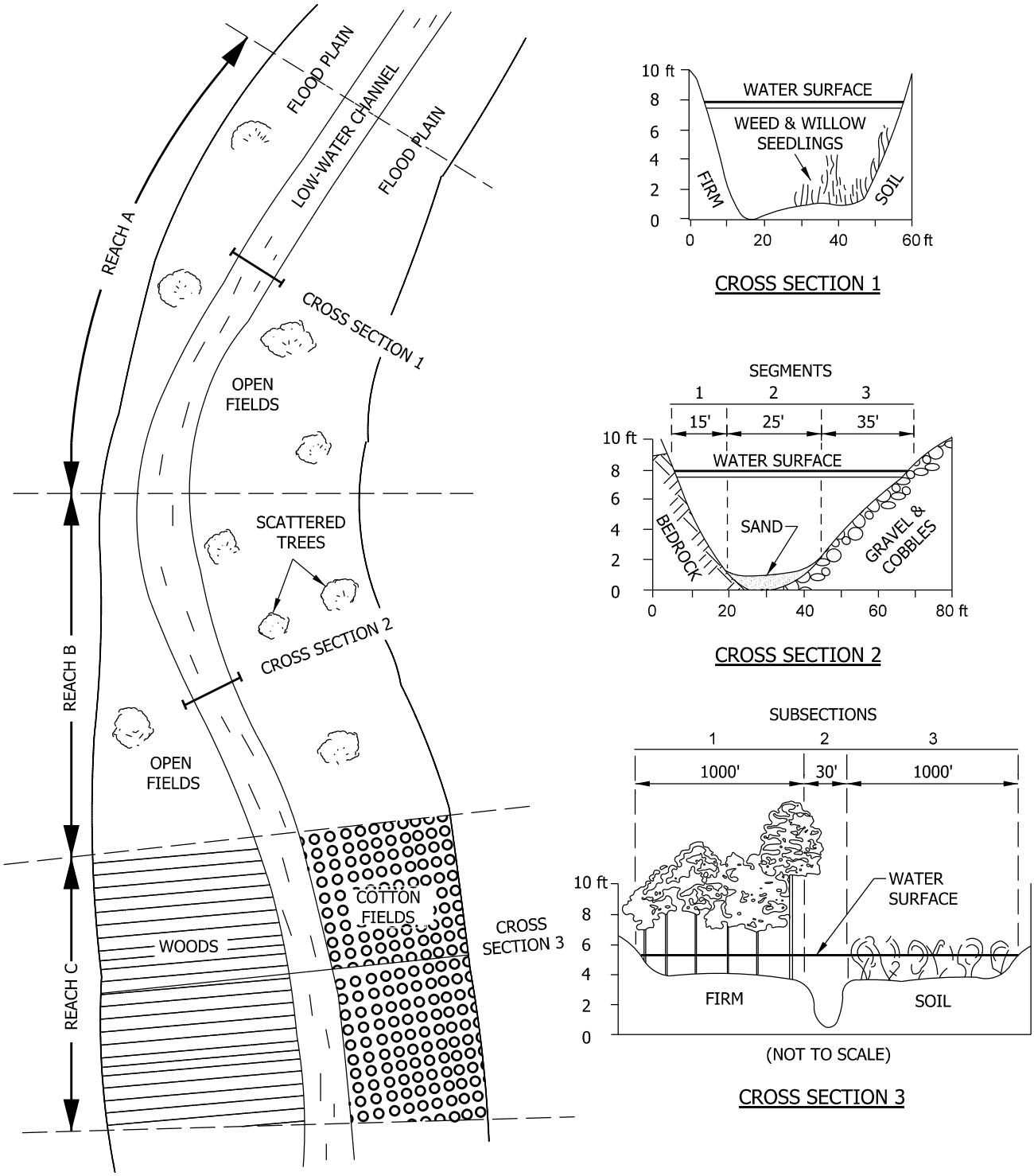

HYPOTHETICAL CROSS SECTION SHOWING REACHES, SEGMENTS, AND SUBSECTIONS USED IN ASSIGNING n VALUES

Figure 203-6B

Back

Grade, G	Interval
$3\% \leq G < 5\%$	200 ft
$5\% \leq G < 8\%$	150 ft
$8\% \leq G < 10\%$	100 ft
$\geq 10\%$	50 ft

LUG INTERVAL

Figure 203-6C

Back

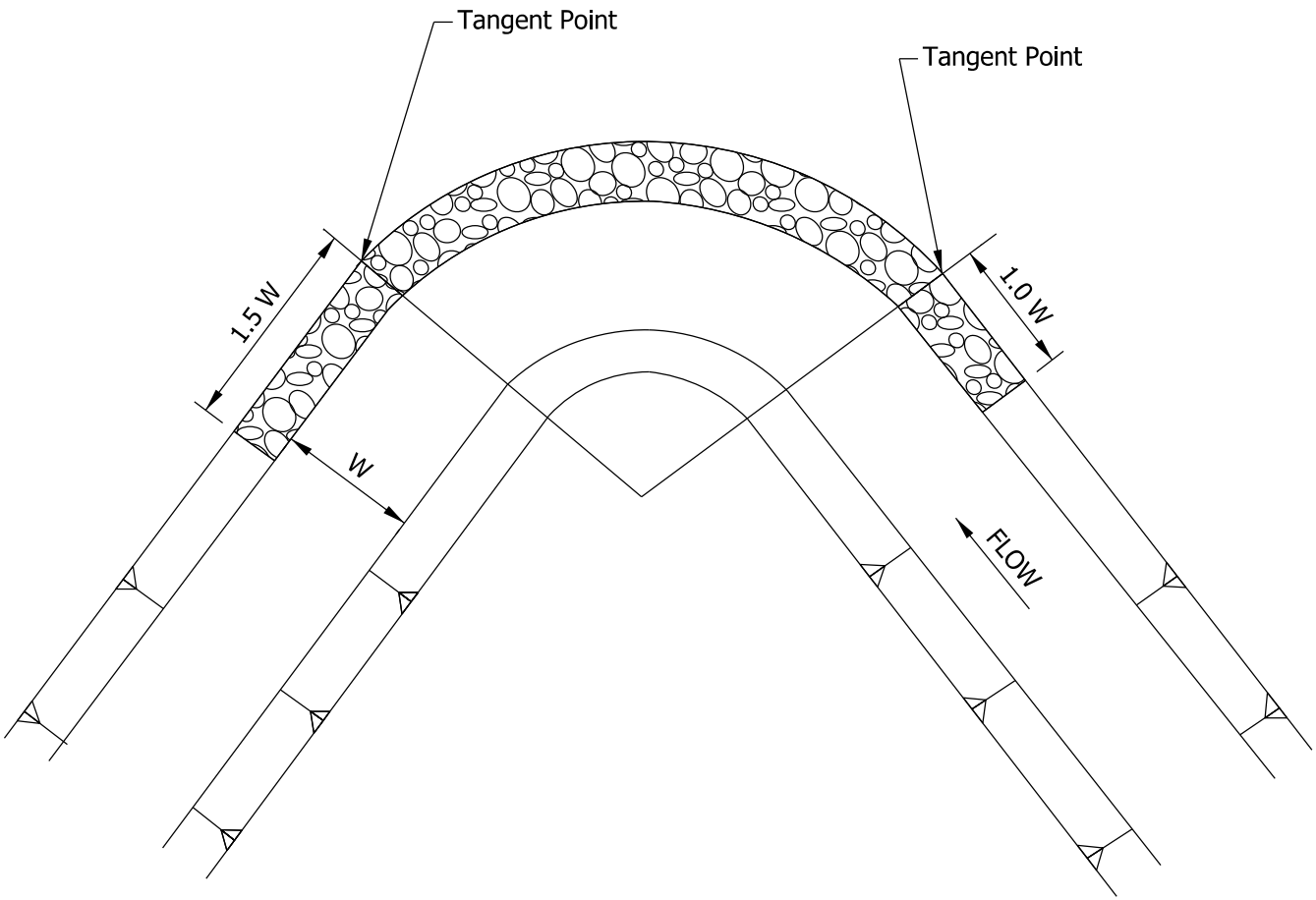

LONGITUDINAL EXTENT OF REVETMENT PROTECTION

Figure 203-6D

Back

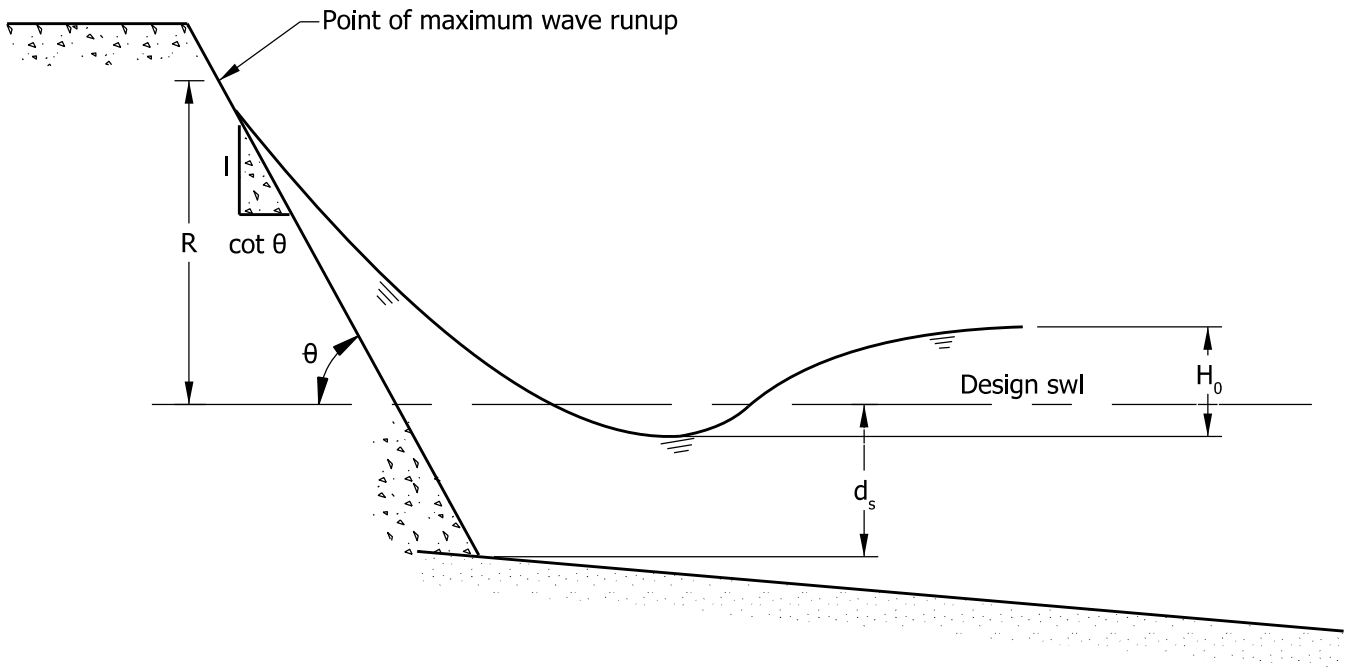

WAVE HEIGHT DEFINITION SKETCH

Figure 203-6E

Back

Slope-Surface Characteristic	Placement Method	Correction Factor
Concrete blocks, voids < 20%	fitted	0.90
Concrete blocks, 20% ≤ voids < 40%	fitted	0.70
Concrete blocks, 40% ≤ voids ≤ 60%	fitted	0.50
Concrete pavement	---	1.00
Grass	---	0.85 – 0.90
Grouted rock	---	0.90
Rock riprap, angular	random	0.60
Rock riprap, hand-placed or keyed	keyed	0.80
Rock riprap, round	random	0.70
Wire-enclosed rocks or gabions	---	0.80

CORRECTION FACTOR FOR WAVE RUNUP

Figure 203-6F

Back

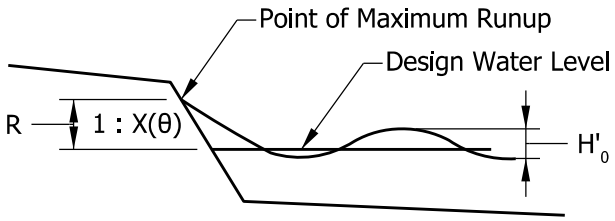

R = Wave Runup Height (ft)
H'_0 = Wave Height (ft)
θ = Bank Angle with the Horizontal

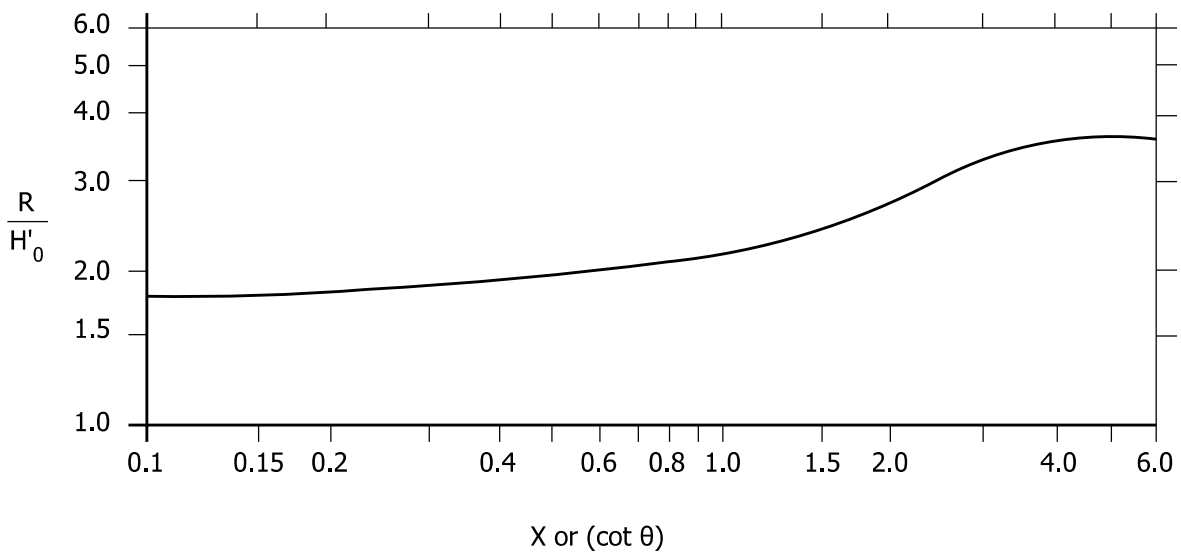

WAVE RUNUP ON SMOOTH, IMPERMEABLE SLOPES

Figure 203-6G

Back

Riprap Class	Toe Width	Toe Depth
Revetment	2 ft	2ft
Class 1	3 ft	3 ft
Class 2	4 ft	4 ft

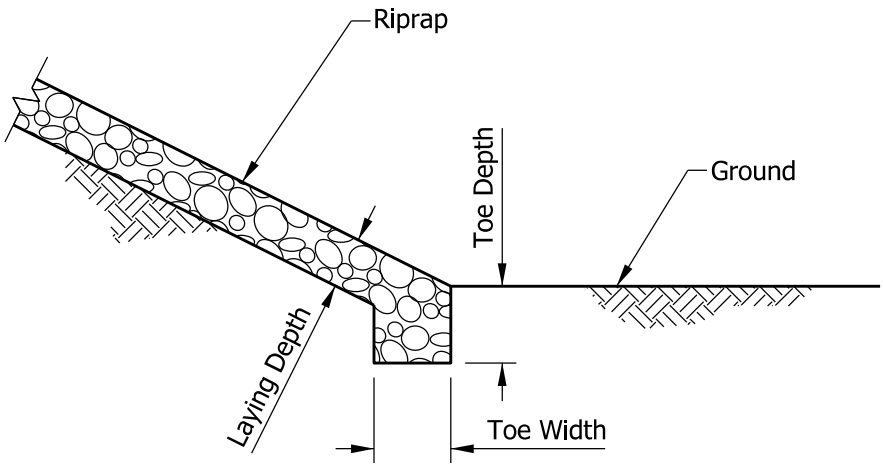

NOTES:

1. Not to Scale.
2. For laying depth, see Standard Specifications.
3. Riprap to be placed on geotextile.

RIPRAP TOE DIMENSIONS

Figure 203-6H

Back

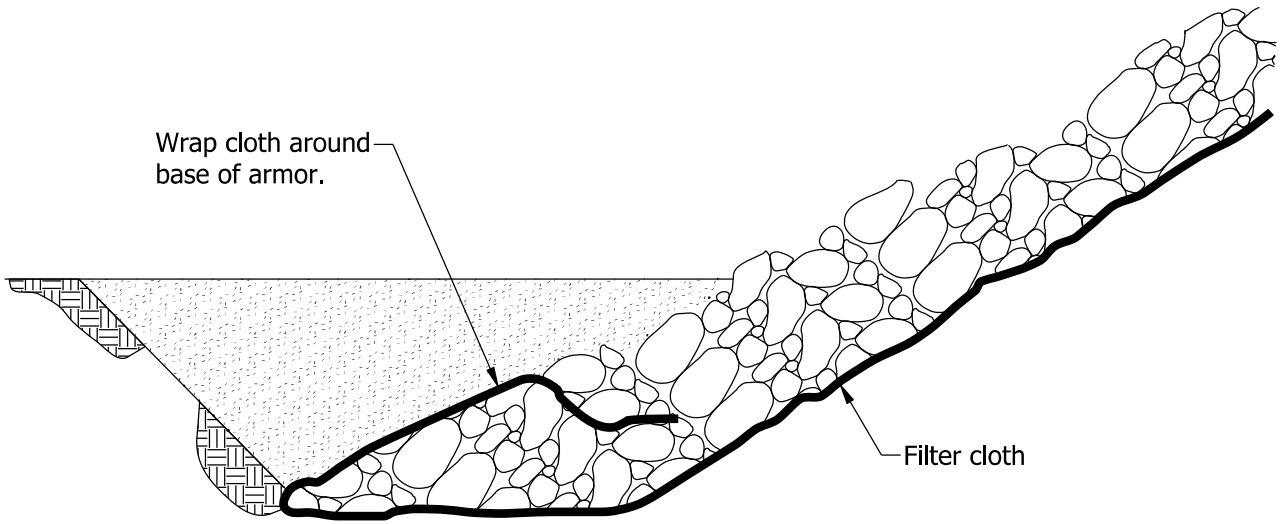

GEOTEXTILE FILTER

Figure 203-6 I

Back

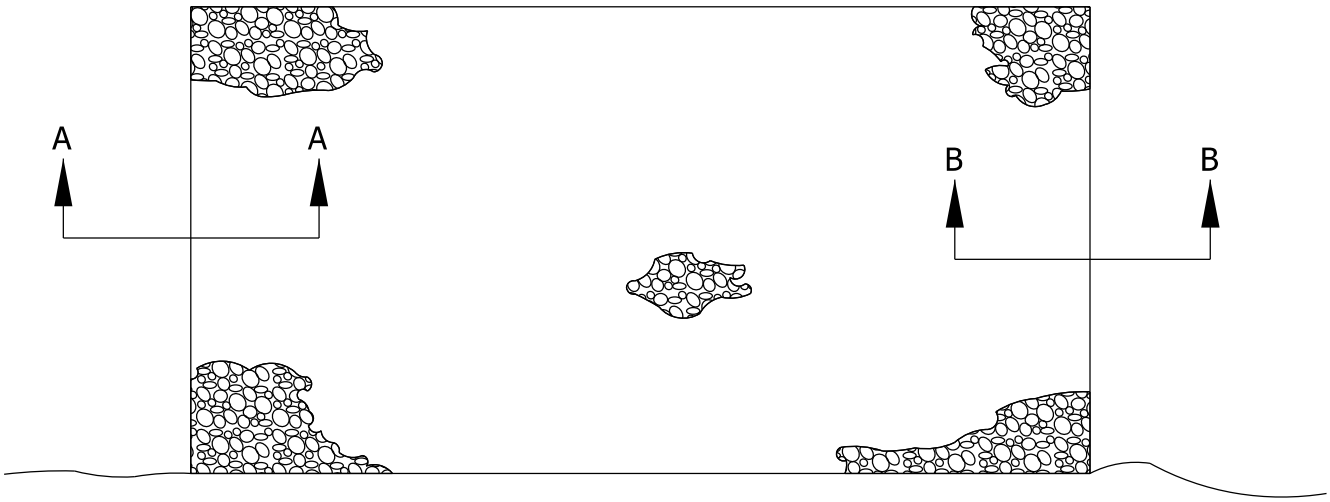

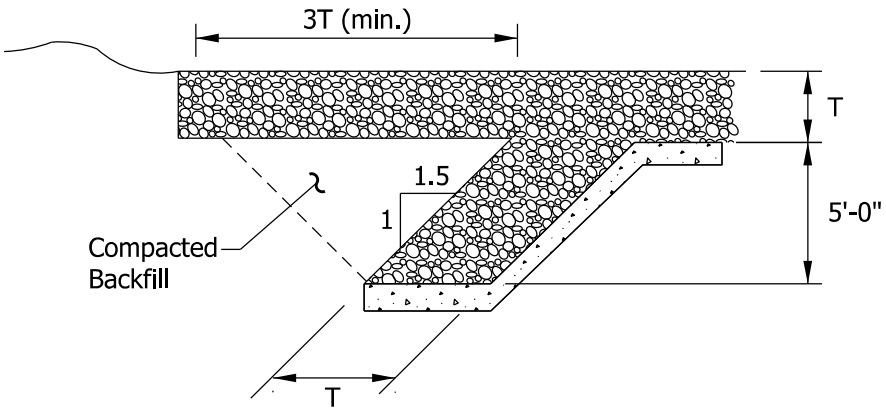

SECTION: A-A

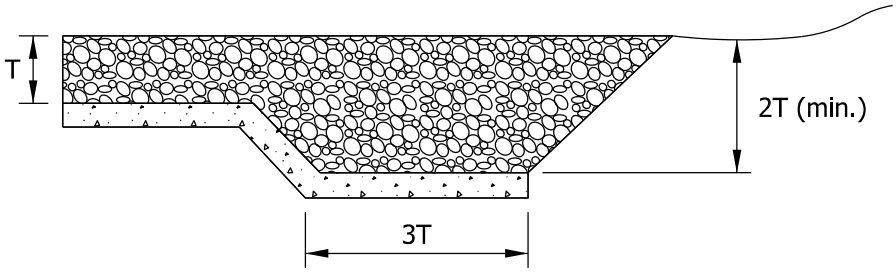

SECTION: B-B

TYPICAL RIPRAP INSTALLATION: PLAN AND FLANK DETAILS

Figure 203-6J

Back

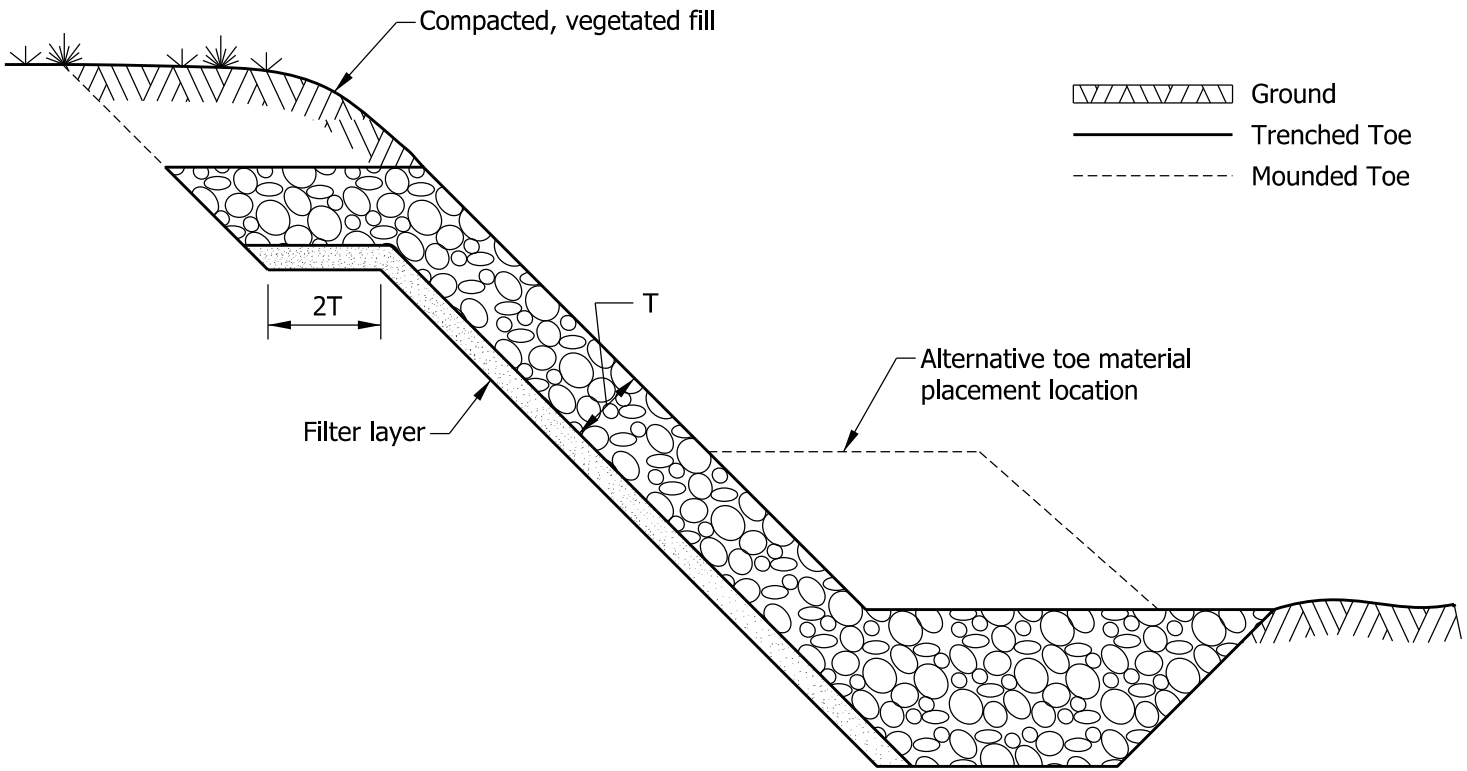

TYPICAL RIPRAP INSTALLATION: SIDE VIEW
(Bank Protection Only)

Figure 203-6K

Back

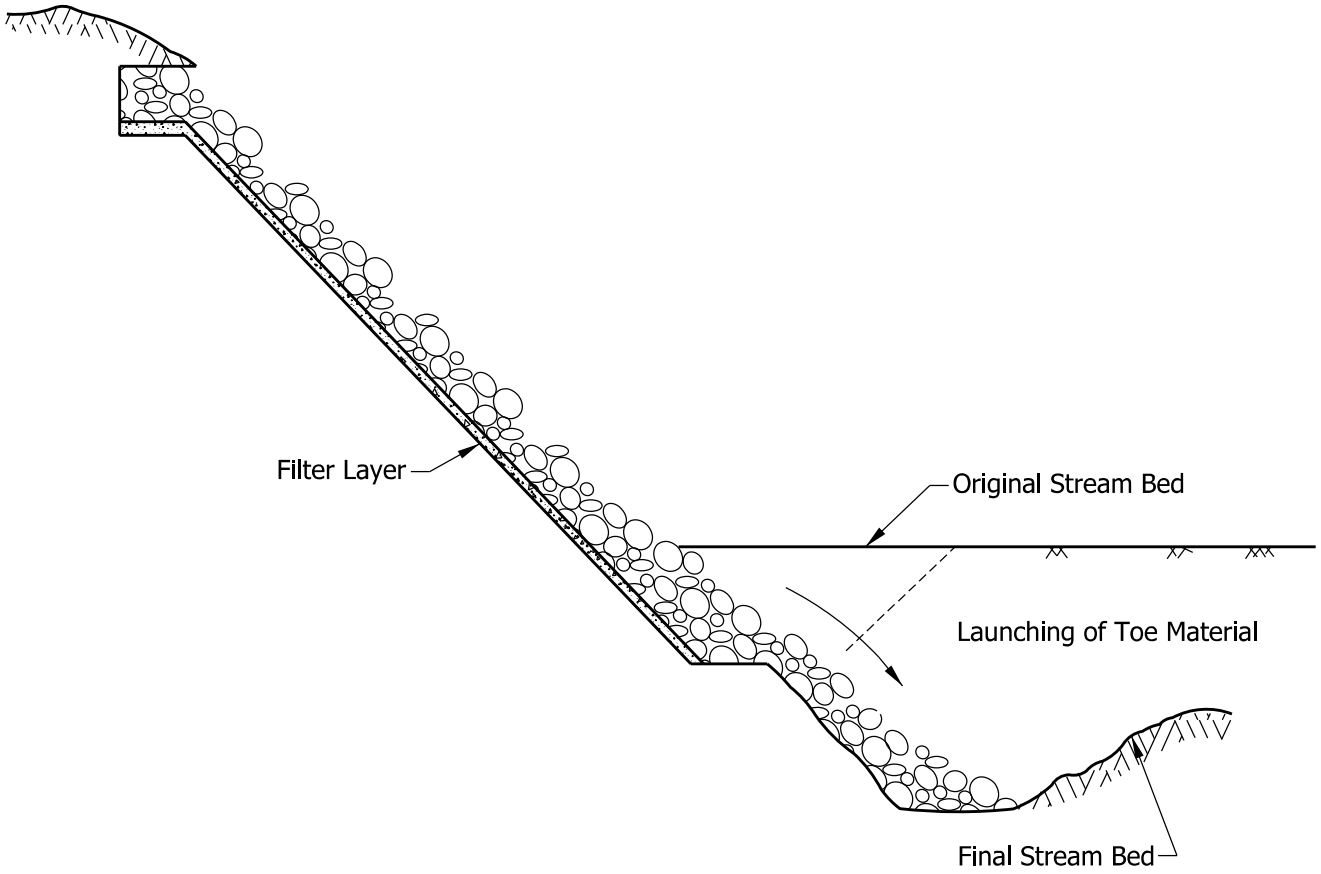

LAUNCHING OF RIPRAP TOE MATERIAL

Figure 203-6L

Back

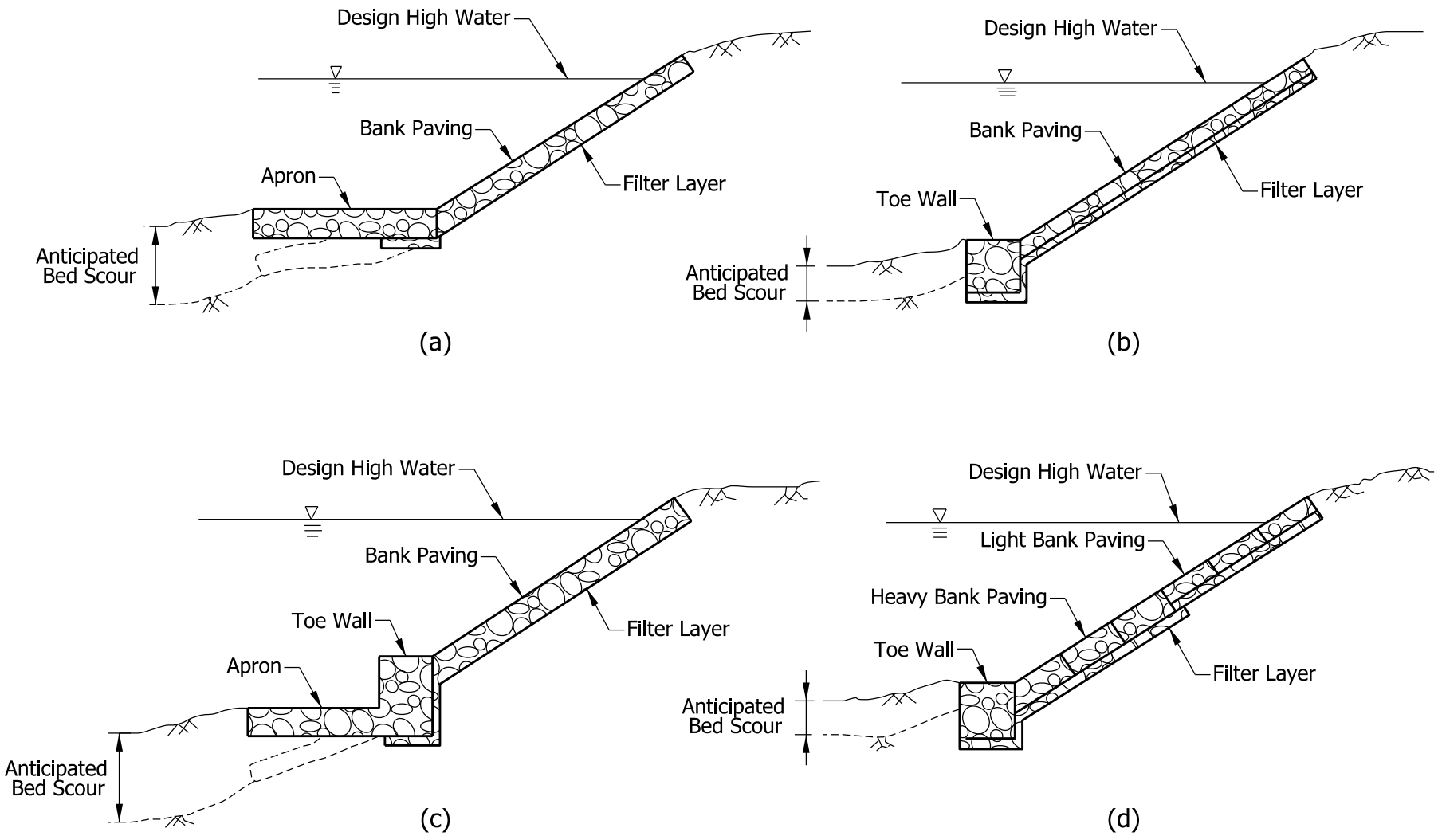

ROCK AND WIRE MATTRESS CONFIGURATION

Figure 203-6M

Back

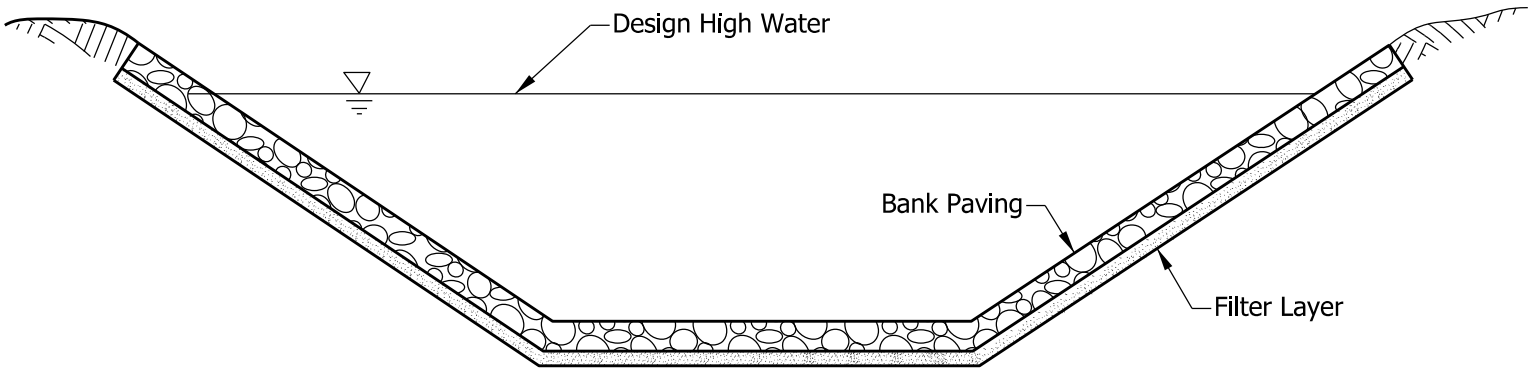

ROCK AND WIRE MATTRESS INSTALLATION
COVERING ENTIRE CHANNEL PERIMETER

Figure 203-6N

Back

Thickness (ft)	Width (ft)	Length (ft)	Wire-Mesh Opening Size (in. x in.)
0.75	6	9	3 x 3
0.75	6	12	3 x 3
1.0	3	6	3 x 3
1.0	3	9	3 x 3
1.5	3	12	3 x 3
1.5	3	6	3 x 3
1.5	3	9	3 x 3
1.5	3	12	3 x 3
3.0	3	6	3 x 3
3.0	3	9	3 x 3
3.0	3	12	3 x 3

STANDARD GABION SIZES

Figure 203-6 O

Back

Bank Soil Type	Maximum Velocity (ft/s)	Bank Slope (H:V)	Minimum Required Mattress Thickness (in.)
Clay, Heavy Cohesive Soils	10	Flatter than 1:3	9
	13 – 16	Steeper than 1:2	12
	Any	Steeper than 1:2	≥ 18
Silt, fine sand	10	Flatter than 1:2	12
Shingle with Gravel	16	Flatter than 1:3	9
	20	Flatter than 1:2	12
	Any	Steeper than 1:2	≥ 18

CRITERIA FOR GABION THICKNESS

Figure 203-6P

Back

Nominal Diameter of Wire (in.)	Minimum Coating Weight, Class 3 or A Coating (oz/ft^2)
0.086	0.7
0.104	0.8
0.128	0.9

MINIMUM COATING WEIGHT

Figure 203-6Q

Back

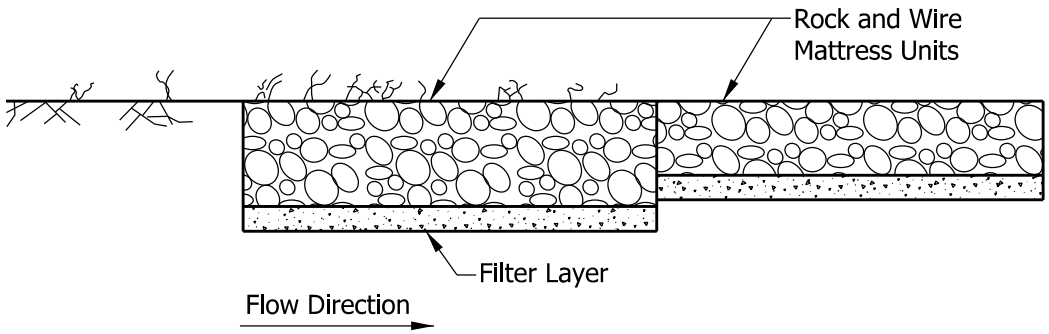

(a) Upstream Face

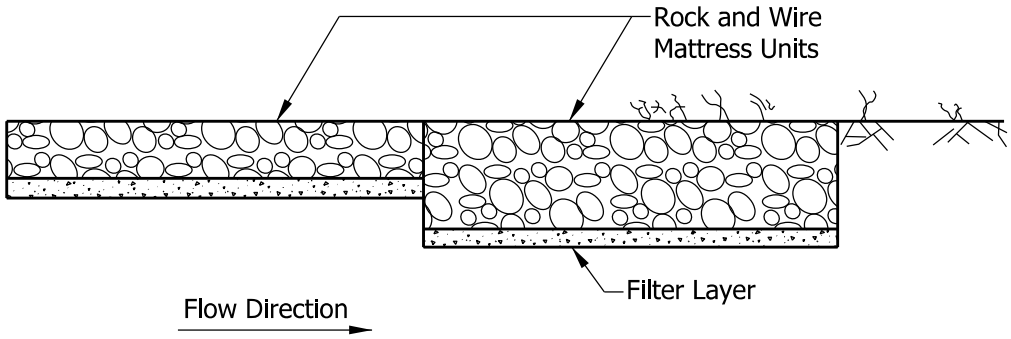

(b) Downstream Face

FLANK TREATMENT FOR ROCK AND WIRE MATTRESS DESIGNS

Figure 203-6R

Back

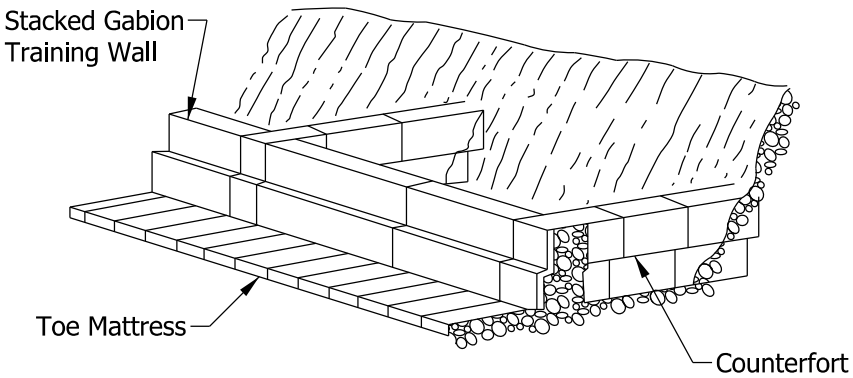

(a) Training wall with counterforts

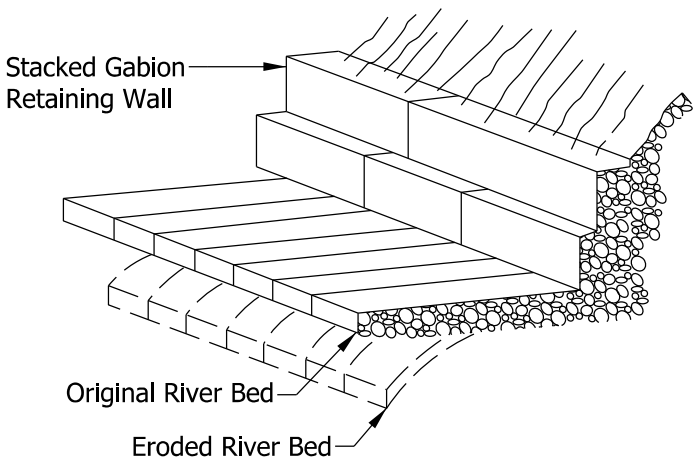

(b) Stepped back low retaining wall with apron

TYPICAL STACKED BLOCK GABION REVETMENT DETAILS

Figure 203-6S

Back

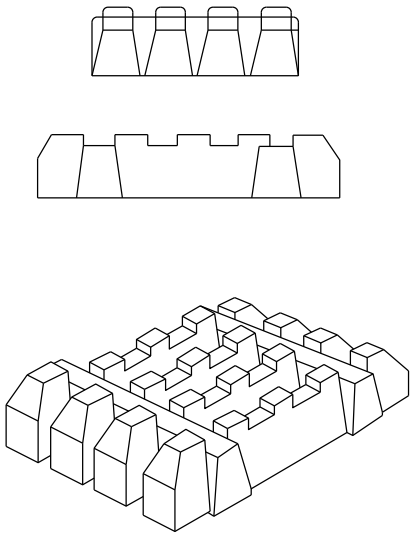

(a) Block Detail

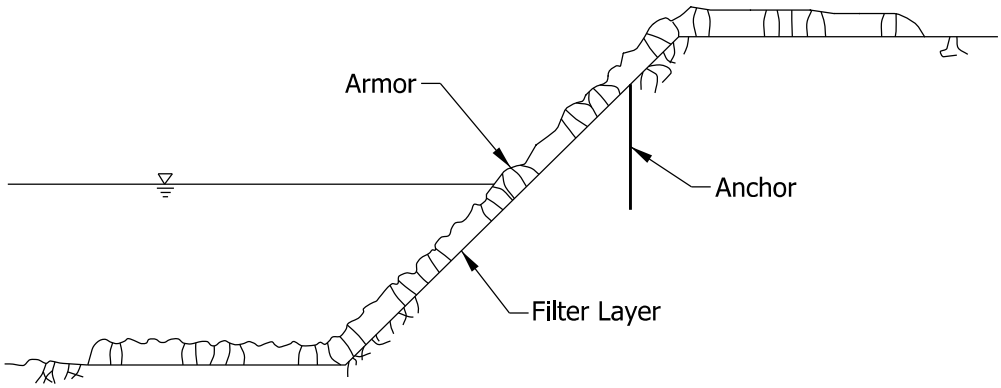

(b) Revetment Detail

MONOSLAB REVETMENT

Figure 203-6T

Back

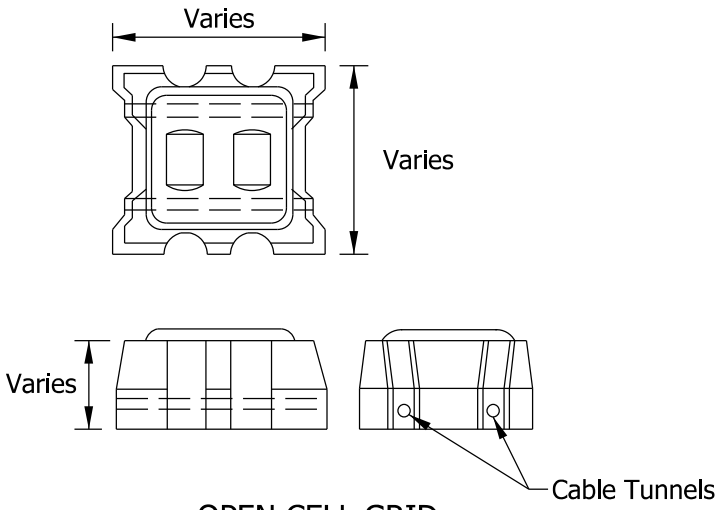

OPEN CELL GRID

(a) Block Detail

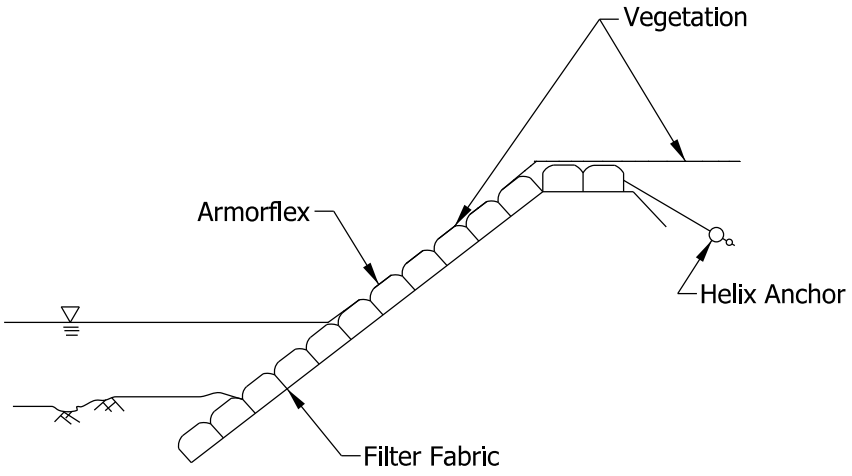

(b) Revetment Configuration

ARMORFLEX

Figure 203-6U

Back

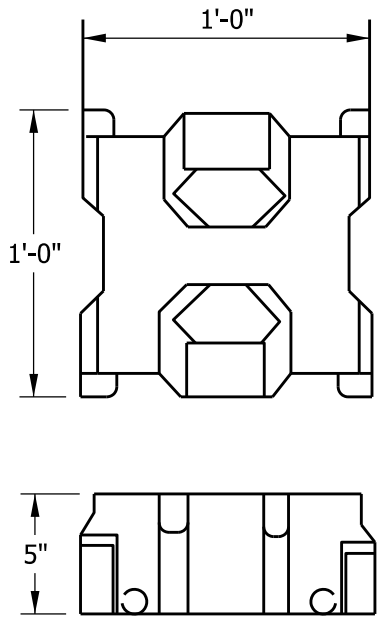

(a) Block Detail

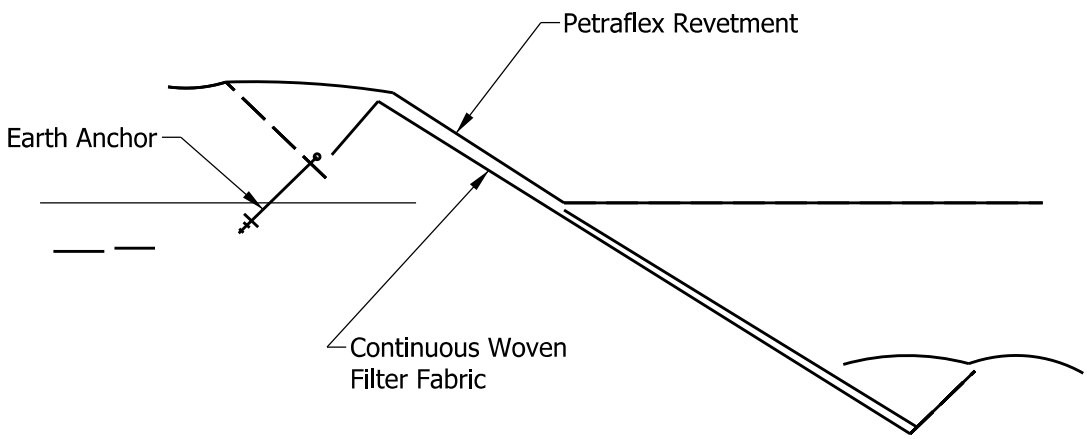

(b) Revetment Configuration

PETRAFLEX

Figure 203-6V

Back

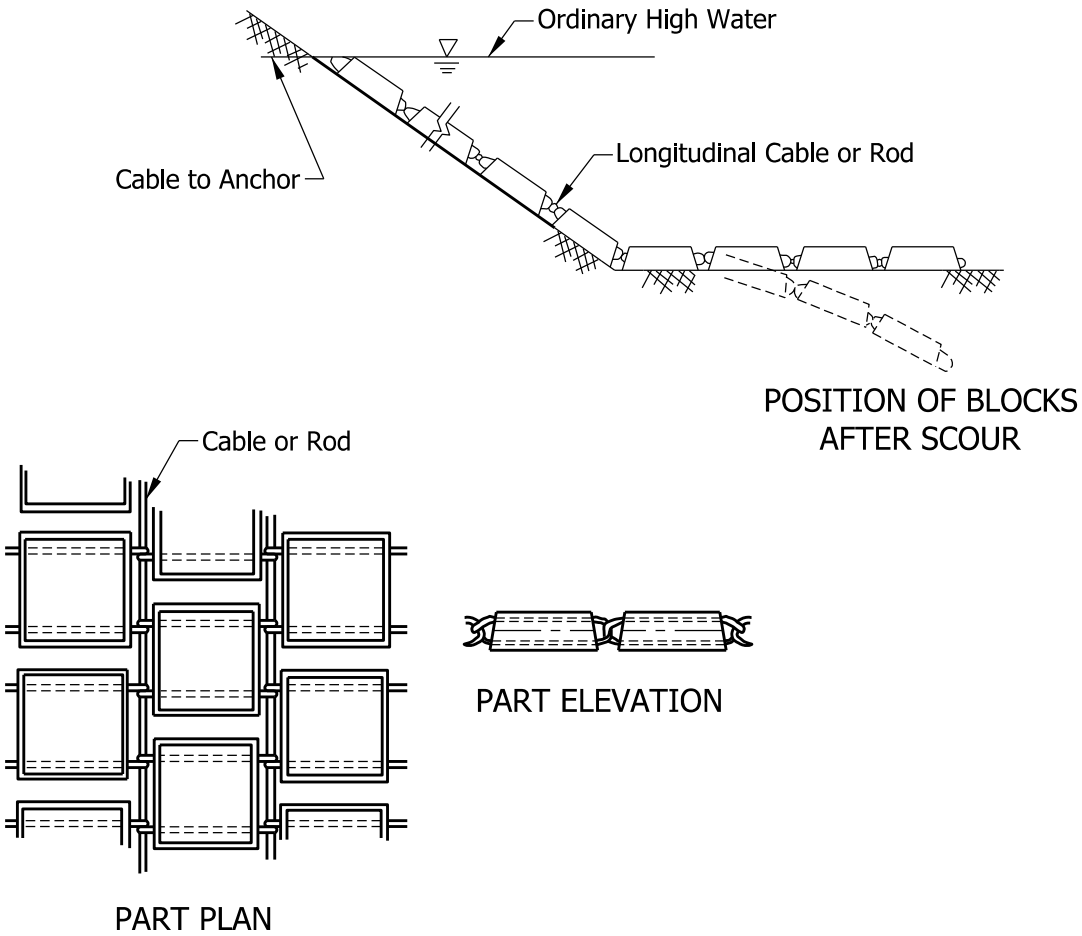

ARTICULATED CONCRETE REVETMENT

Figure 203-6W

Back

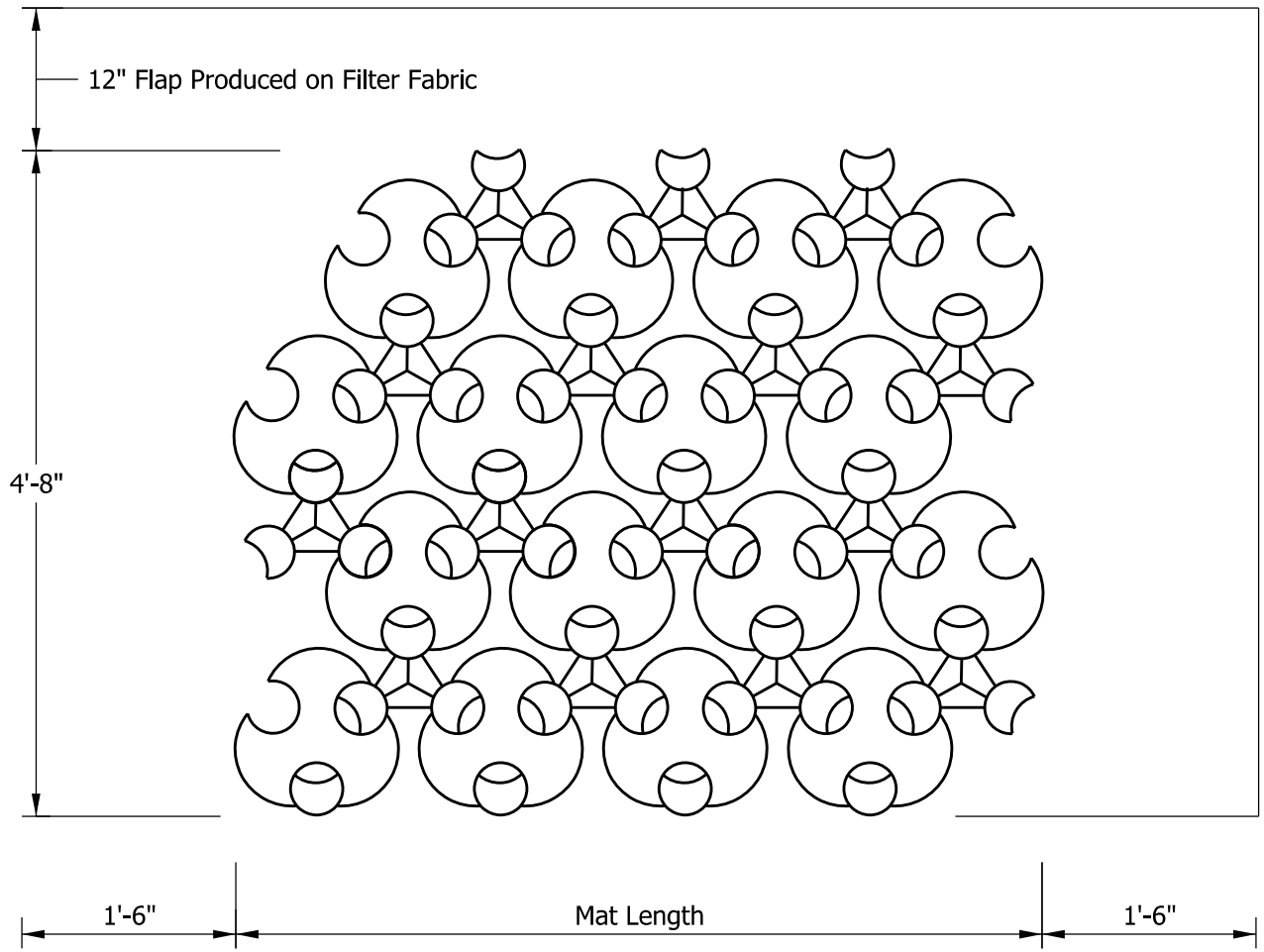

TRI-LOCK REVETMENT

Figure 203-6X

Back

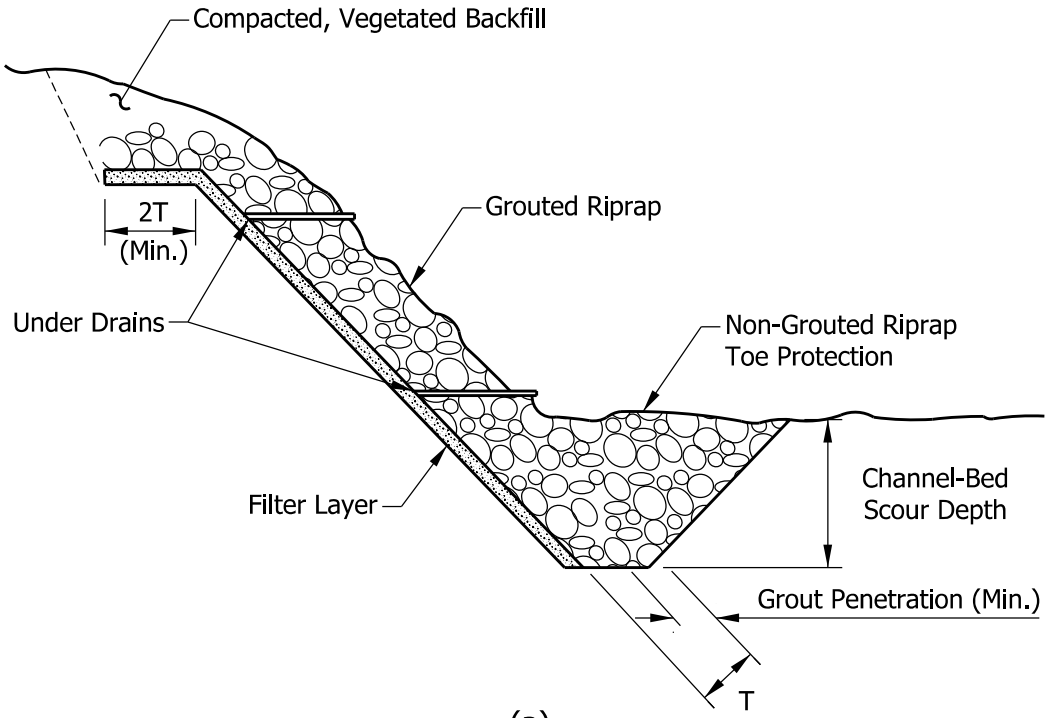

(a)

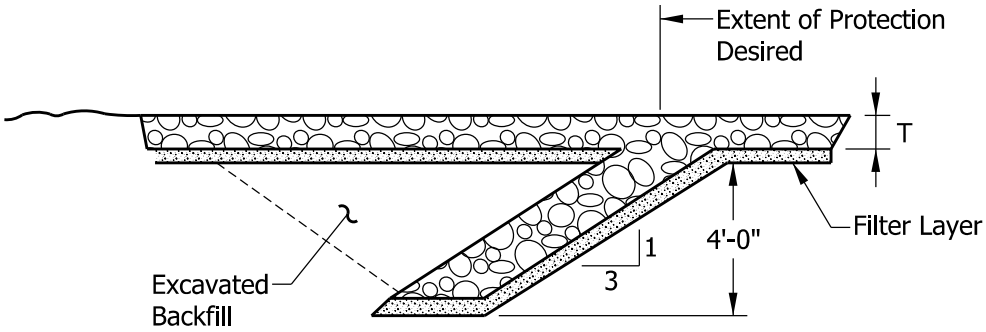

(b)

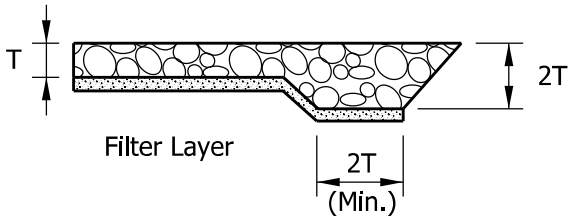

(c)

GROUTED RIPRAP SECTIONS

Figure 203-6Y

Back

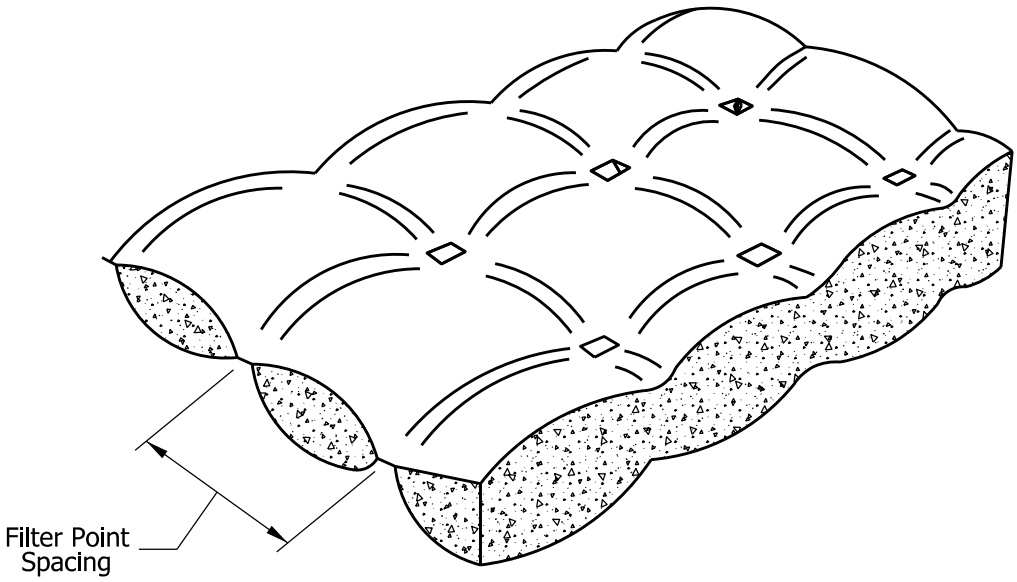

GROUTED FABRIC-FORMED REVETMENT
(TYPE 1)

Figure 203-6Z

Back

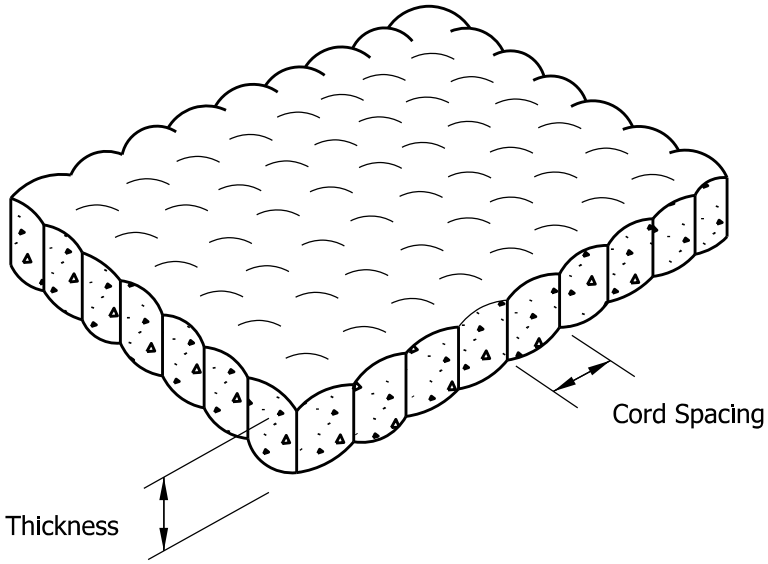

Weep Hole
Assembly

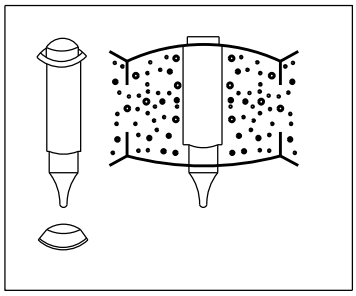

GROUTED FABRIC-FORMED REVETMENT
(TYPE 2)

Figure 203-6AA

Back

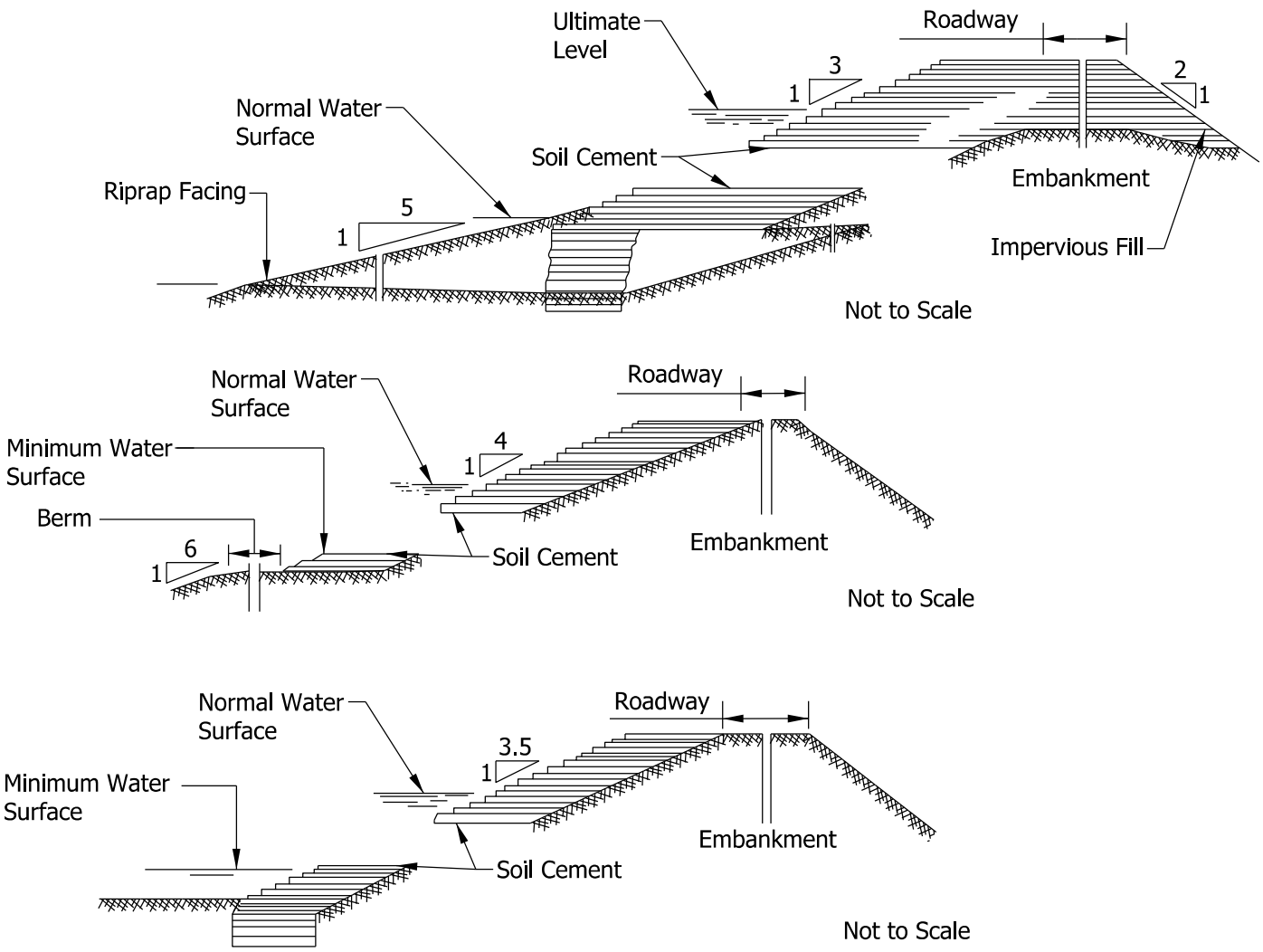

DETAILS AND DIMENSIONS OF THREE SOIL-CEMENT FACINGS
DESIGN GUIDELINES

Figure 203-6BB

Back

CHAPTER 204

Permanent Stormwater Quality Controls

CHAPTER 204

PERMANENT STORMWATER QUALITY CONTROLS

The EPA is currently rulemaking, focusing on stormwater quality regulations which will impact project development and design as well as water resources. INDOT, a significant transporter of and contributor to storm water runoff, has reserved Chapter 204 for development of best management practices for permanent water quality measures. INDOT is currently developing guidelines that will aid the designer in choosing the appropriate measures and frequency of their use. Refer to chapters 201 and 203-5.0 for currently available measures. Please direct questions to the Hydraulics Manager and Permit Manager for special circumstances that arise during the project's design and development.

CHAPTER 205

Temporary Erosion and Sediment Control

Design Memorandum	Revision Date	Sections Affected
15-06	Mar. 2015	205-3.02(03)
16-11	Mar. 2016	205-4.0
16-27	Jul. 2016	205-2.0, 205-3.0, 205-5.0, Fig. 205-1A

TABLE OF CONTENTS

TABLE OF CONTENTS 2

LIST OF FIGURES 3

CHAPTER 205 4

205-1.0 GENERAL INFORMATION 4

205-2.0 EROSION AND SEDIMENT CONTROL PLAN DEVELOPMENT [Added JUL. 2016] 5

205-2.01 Site Analysis [Rev. Jul. 2016] 5

205-2.02 Plan Requirements [Added Jul. 2016] 6

205-2.03 Plan Information for Erosion and Sediment Control Measures [Added Jul. 2016] ... 8

205-3.0 TEMPORARY EROSION AND SEDIMENT CONTROL MEASURES [Rev. JUL. 2016] 8

205-3.01 Protection of Adjacent Areas [Rev. Jul. 2016] 8

205-3.01(01) Silt Fence 8

205-3.01(02) Vegetative Filter Strip [Rev. Jul. 2016] 9

205-3.01(03) Filter Berm 9

205-3.01(04) Sediment Trap [Rev. Jul. 2016] 10

205-3.01(05) Sediment Basin [Rev. Jul. 2016] 11

205-3.01(06) Temporary Stable Construction Entrance 12

205-3.02 Slope 13

205-3.02(01) Diversion Interceptor 13

205-3.02(02) Slope Drain 14

205-3.02(03) Temporary Seeding and Temporary Mulch [Rev. Mar. 2015] 14

205-3.02(04) Manufactured Surface Protection Products and Surface Roughening 14

205-3.03 Side Ditch 15

205-3.03(01) Check Dam 15

205-3.03(02) Modified Check Dam 15

205-3.04 Inlet Protection [Rev. Jul. 2016] 16

205-3.05 Quantities [Added Jul. 2016] 16

205-4.0 STORM WATER QUALITY MANAGER [Added MAR. 2016] 16

205-5.0 REFERENCES [Rev. JUL 2016] 17

FIGURES 18

LIST OF FIGURES

Figure	Title
205-1A	Erosion and Sediment Control Plan Technical Review Checklist [Rev. Jul. 2016]
205-3A	Slope Length for Silt Fence
205-3B	Silt Fence Application
205-3C	Minimum Filter Strip Application
205-3D	Vegetative Filter Strip Application
205-3E	Sediment Traps in V-Ditches
205-3F	Sediment Traps in Flat Bottom Ditches
205-3G	Flood Pool Length
205-3H	Sediment Basin Details
205-3I	Spacing for Diversion Type B
205-3J	Disturbed Side Ditch Treatment
205-3K	Undisturbed Side Ditch Treatment

CHAPTER 205

TEMPORARY EROSION AND SEDIMENT CONTROL

205-1.0 GENERAL INFORMATION

An erosion and sediment control plan, also known as a storm water management plan, should be developed where soil is disturbed, especially where sediment can enter a waterway or move off site. The erosion and sediment control plan should address erosion and sediment control during the entire construction process. Different measures will likely be used during different phases of construction. Allowance should be made for changes in the field to accommodate existing conditions or the use of different measures where they are more appropriate.

The goals of erosion control and sediment control are different. The purpose of placing erosion control measures is to prevent sediment from being mobilized on the project site. Sediment control measures are placed to recapture soil that has been mobilized and prevent it from leaving the construction site. Water flowing through a construction-disturbed area is to be filtered of sediment before it mixes with water which is not affected by construction operations. The guidelines presented in this chapter concentrate on temporary erosion and sediment control measures. The designer should coordinate with the Division of Environmental Services to determine the need for permanent erosion and sediment control measures.

INDOT *Standard Specifications* and *Standard Drawings* show existing temporary erosion and sediment control measures available to the designer. The erosion and sediment control measures described herein have been listed in groups according to their use. Some of the measures may be used in multiple applications. These guidelines will aid the designer in choosing the appropriate measures and frequency of their use. Erosion and sediment control measures should be designed at a minimum for a 2-yr 24-h rain event unless otherwise stated.

An erosion and sediment control plan known as a Storm Water Pollution Prevention Plan (SWPPP), is required to be submitted to the Indiana Department of Environment Management (IDEM) to comply with 327 IAC 15-5 (Rule 5). Rule 5 Notice of Intent (NOI) is a key component of the permitting process in order to maintain compliance with other water quality permits such as 404, 401, and DNR permits. See the INDOT *Waterway Permits Manual* at http://www.state.in.us/indot/2522.htm for additional permit information.

Formal submittal to comply with Rule 5 is required where 1 acre or more is disturbed. A copy of Rule 5 Notice NOI is available via the IDEM website, at http://www.in.gov/idem/4914.htm . It lists

items that should be submitted to IDEM with the erosion and sediment control plan. The designer should consider all items listed in Figure 205-1A Erosion and Sediment Control Plan Technical Review Checklist. The erosion and sediment control plan should be prepared and submitted to IDEM. The NOI letter should be filed with IDEM. The submittals should be as follows

1. Plans developed for an INDOT project will be filed by the Environmental Services Division permit coordinator.

2. Plans developed for a local public agency project will be filed by the local agency or its representative to the Soil and Water Conservation District.

3. Plans developed by a contractor, i.e., design build or lump-sum erosion control, will be signed by the contractor first and then by the Environmental Services manager or representative. Plans are submitted to IDEM by the contractor.

205-2.0 EROSION AND SEDIMENT CONTROL PLAN DEVELOPMENT [ADDED JUL. 2016]

205-2.01 Site Analysis [Rev. Jul. 2016]

The erosion and sediment control plan should identify control measures that will be used to minimize erosion and off-site sedimentation. It serves as a blueprint for the location, installation, and maintenance of these measures.

In preparing the erosion and sediment control plan, the designer should start by observing local and regional drainage areas, geometric site constraints, and topography. The volume of water entering and leaving the construction site at various locations should be considered. Where reasonable, off-site waters should be isolated and allowed to pass through the project site. Sediments from on-site sources should be captured prior to leaving the site. The method of treatment depends upon the drainage area.

Providing a vegetated ground cover is most important in terms of preventing erosion. If the existing vegetation is to be disturbed, appropriate erosion and sediment control measures should be utilized. If utility features traverse the site, their relocation should be considered in designing these measures.

The following principles of erosion and sediment control should be utilized.

1. The physical characteristics of the site should be assessed, including topography and drainage, to determine how to best minimize erosion and sedimentation.

2. The erosion and sediment control plan should be designed to include measures that will keep sediment on the construction site as much as possible.

3. Where reasonable, a diversion interceptor or waterway should be used to divert or intercept off-site runoff. If the designer determines that the use of a diversion interceptor for off-site runoff is not practical, the designer should increase the size or quantity of proposed erosion and sediment control measures to satisfy the additional volume of water being treated from off-site runoff.

4. Measures to slow runoff and allow deposition of sediment should be designed using grading and sediment barriers to break up a long, steep slope.

5. A temporary seeding quantity in accordance with 205-3.02(03) should be provided for each area of disturbed soil.

6. Runoff velocity should be reduced by means of maintaining existing vegetative cover, preserving a natural buffer strip around the lower perimeter of the disturbed land, and installing perimeter controls such as silt fences, filter berms, and sediment basins or traps.

7. The contractor should be provided adequate working space to construct, repair, and maintain erosion control features.

8. A typical erosion control design is believed to comprise 1% of the estimated construction cost. The designer should use this threshold of 1% as a check in their design process. When the estimated erosion control cost does not reach the 1% threshold, the designer should review the plan and either make revisions or provide a design justification for not meeting this spending threshold which is intended to protect adjacent properties and Waters of the US.

9. No erosion and sediment control measures can be placed within a jurisdictional waterway or wetland unless permitted through the IDEM 401 and/or Corps of Engineers 404 permitting processes.

The construction clear-zone should be considered when selecting the appropriate erosion control measures. Chapter 82 includes the information necessary to determine the construction clear-zone. For example, traversable check dams such as straw bales, fiber rolls, or fiber socks should be used instead of riprap check dams inside the construction clear-zone.

205-2.02 Plan Requirements [Added Jul. 2016]

The project plans should include Temporary Erosion and Sediment Control plan sheets to provide general information and to detail the specific erosion and sediment control measures to be utilized. Figure 205-1A provides a checklist of the items that are required to be shown on these plan sheets.

One of the important purposes of the Temporary Erosion and Sediment Control plan sheets is to provide an overall view of the drainage pattern in the areas both adjacent to and within the project site. The following checklist items are important to achieve this purpose:

1. Locations where off-site drainage will enter the project site. Where a defined channel is present, the drainage area and stream name, if available, should be labeled on the plan sheet. If no defined channel is present, the area draining towards the site should be delineated on the plan sheet and be labeled with the drainage area.

2. Locations of the specific points where storm water discharge will leave the site. The plans should identify each discharge location in terms of the type of conveyance (open channel, storm sewer, groundwater infiltration, etc.), the name and/or owner of the receiving facility and whether the discharge is into a municipal separate storm sewer system.

3. Any jurisdictional waterways and/or wetland areas identified in the project Waters Report should be labeled and delineated.

4. Soil information for the project site and the adjacent areas. Soil information for the adjacent areas should cover an appropriate distance around the project site and at a minimum should include all of the off-site drainage areas described in bullet point 1, above. This information should include a soils map taken from the NRCS National Cooperative Soil Survey. Each soil area on the map should be labeled with its code, and a table should be provided to relate each code with its corresponding soil classification.

A variety of resources are available to assist the designer in obtaining the data described above. Section 205-4.0 provides a list of these resources.

Erosion and sediment control measures should be designed in phases to correspond to the project construction phasing. As a general rule, a separate set of Erosion and Sediment Control plan sheets will be needed for each phase of the construction, depending on the overall complexity of the project. Temporary erosion and sediment control measures are typically constructed in conjunction with maintenance of traffic. Thus, phasing for temporary erosion and sediment control should correspond with the maintenance of traffic phasing.

205-2.03 Plan Information for Erosion and Sediment Control Measures [Added Jul. 2016]

In general, sufficient information can be provided for the measures in the erosion and sediment control plan by delineating the location of each measure on the plan sheet and providing a table of quantities. The location of each measure to be implemented should be represented on the plan sheet with an appropriate symbol.

The plan sheet should include a separate table of quantities for each category of measure (e.g. inlet protection or check dams), with a line in the table for each measure to be installed. The table should identify the location of each measure by line and station as well as whether it will be on the left or right side. The table should also include the quantity for each measure, based on the pay item units listed in the project specifications.

A few measures will require more detailed design information than can be shown in a table of quantities. Any additional information to be shown on the plan sheets for a specific type of measure is listed in Section 205-3.0.

To the extent possible, all of the erosion and sediment control measures listed in the project specifications should be delineated on the plan sheet. However, the locations of some categories of measure, such as temporary construction entrances, will be determined by the contractor during construction. Thus, it will not be necessary to show the locations of these measures on the plan sheets.

205-3.0 TEMPORARY EROSION AND SEDIMENT CONTROL MEASURES [REV. JUL. 2016]

205-3.01 Protection of Adjacent Areas [Rev. Jul. 2016]

Adjacent areas should be considered to be both off-site areas as well as within the right of way that are not proposed to be disturbed. The following measures are used to minimize sediment to areas adjacent to the disturbed areas. These measures include silt fence, vegetative filter strips, filter berms, sediment traps, and sediment basins.

205-3.01(01) Silt Fence

A silt fence captures sediment by pooling water to allow deposition, not by filtration. A silt fence requires a trench for proper installation and should not be used on a fill slope. Though the practice usually works best in conjunction with other erosion control measures, it can be effective where used alone under the proper field conditions. A silt fence should not be used to divert water. It should not be used across a stream, channel, or where concentrated flow is anticipated.

Use of a silt fence is limited to a disturbed drainage area of 0.25 ac/100 ft of fence. The use of silt fence is further restricted by the slope or grade, as indicated in Figures 205-3A and 205-3B. The silt fence should be installed as level as possible while following the land contour. Ideally, silt fence should be installed at least 10 ft from the toe of slope to provide a broad, shallow sediment pool with increased storage capacity.

The length of a silt fence should be sufficient to encompass the boundaries of the toe of the slope with the ends of the fence terminated upslope. The silt fence should terminate at adjacent erosion control measures or at stabilized areas.

Where site conditions exceed the limits shown in Figure 205-3A, other appropriate erosion and sediment control measures should be implemented in conjunction with the silt fence. See the INDOT *Standard Drawings* series 205-TECP for details.

205-3.01(02) Vegetative Filter Strip [Rev. Jul. 2016]

A vegetative filter strip is an area where the ground cover is left undisturbed to filter runoff. Leaving existing grassy vegetation in place is the most effective method for erosion control. The designer should identify all potential areas for use of this control measure and evaluate each according to the minimum requirements shown in Figures 205-3C and 205-3D.

A vegetative filter strip should be left between a sediment-producing site and a down slope site or watercourse. The effectiveness of a vegetative filter strip is dependent upon the slope of the undisturbed area. Where practical, the vegetative strip should be on the flatter area beyond the toe of slope. A site condition that does not allow for preserving a filter strip on the flatter ground, or existing vegetation that does not meet the minimum requirements shown in Figure 205-3C should not preclude leaving as much vegetation on the slope as possible. In this situation, the vegetative filter strip should be used in conjunction with other measures such as silt fence, inlet protection, sediment trap, or sediment basin to increase effectiveness.

Typical applications for this sediment control measure include the area adjacent to the right-of-way limit, roadside ditch, relocated or existing waterway, or wetland. The vegetative filter strip may be considered for any undisturbed area within the construction limits. The locations which are not to be disturbed by the contractor should be labeled and delineated in the erosion and sediment control plan.

205-3.01(03) Filter Berm

A filter berm is a temporary barrier consisting of a compost, organic mulch, or No. 5 or 8 filter stone installed on the contour to intercept sheet flow and filter storm water runoff from a small, unvegetated drainage area. In an area prone to flooding, a riprap berm faced with filter stone should be used. Filter stone will be placed on the upslope side of the riprap berm, or the riprap should be wrapped in geotextile. The designer should show the berm ends turned upslope so that the ends of the berm terminate at higher elevations than the top of the berm at its lowest point. This will prevent water from flowing unfiltered around the berm.

The maximum drainage area for this measure is limited to 0.25 ac/100 ft of berm. A filter berm should not be placed on a slope steeper than 4:1. When placed at the toe of slope, the filter berm should be located 5 to 10 ft from the toe.

205-3.01(04) Sediment Trap [Rev. Jul. 2016]

A sediment trap is used to temporarily detain runoff and contain sediment in a drainage-flow area such as in a ditch line or swale. It is most often utilized as the last measure to filter water before it leaves the project site. Revetment riprap and No. 5 or 8 stone, along with geotextile, should be used in the construction of a sediment trap. The detained storage area should have a length-to-width ratio of 2:1 or greater. See the INDOT *Standard Drawings* series 205-TECD for details.

A sediment trap should be designed for a maximum drainage area of 5 acres. Where space is limited, the sediment trap should be designed considering the limited space rather than the drainage area. In this situation, other sediment control measures should be considered. To determine the volume of the trap, calculate the watershed acreage that is the tributary to the sediment trap. The trap should then be designed to store sediment for a minimum disturbed volume of 65 yd^3/ac.

Figures 205-3E, 205-3F, and 205-3G indicate the storage capacity and flood pool length for a sediment trap.

The sediment trap design depends on the following geometric characteristics of the proposed ditch:

1. ditch grade;

2. ditch shape, as flat bottom or V bottom; and

3. foreslope and backslope.

Figure 205-3G indicates the minimum spacing for sediment traps, based on the flood pool length, so that the next measure cannot encroach into the pool of the previous one. The procedure used to determine spacing of multiple sediment traps is as follows.

1. Select the largest sediment trap, by spillway height, that can physically fit into the proposed ditch cross section.

2. Check the proposed ditch grade directly upstream of the approximate location of the sediment trap. The grade should be continuous.

3. Find the required minimum sediment-trap spacing from Figure 205-3G.

Each sediment trap shown on the Erosion and Sediment Control plan sheet should be labeled with the area in acres which drains to the trap, exclusive of the drainage areas at any upstream traps, as well as the total required storage volume within the trap.

205-3.01(05) Sediment Basin [Rev. Jul. 2016]

A sediment basin is a water-impoundment structure designed to hold the 10-yr 24-h rain event for the watershed passing through the site. The basin can be formed with an embankment or by means of excavation and is used to prevent offsite sedimentation by retaining sediment on the construction site. A sediment basin should be a primary consideration for a new-construction project where there is adequate right of way. It should be used within an interchange, rest area, weigh station, or replacement wetland. Where right of way is limited, the sediment basin should be designed considering available space rather than drainage area. In this situation, other control measures should be specified in conjunction with the sediment basin depending on site conditions.

The sediment basin will have a length-to-width ratio of 2:1 or greater. It must be shaped to fit the area in which it will be used. A sediment basin should be designed for a maximum drainage area of 30 acres. The basin should be designed to store a minimum water volume of 65 yd^3/ac of watershed. If the watershed area is greater than 30 acres, additional measures should be considered. A berm should be placed around the pond that is at least 2 ft above the design elevation. An emergency spillway should be provided, typically as a weir, to drain excessive storm-event rainfall beyond the required design. The spillway crest should be set at least 1 ft higher than the design elevation. The spillway location will be determined based on the available right of way. However, the spillway should not be directly above the outlet pipe.

For guidance in the use of a wetlands replacement site as a sediment basin, contact the Office of Hydraulics. If the permanent control structure of the wetlands replacement site or detention

pond is a pipe, a temporary perforated riser with an anti-seep collar and anti-flotation block should be used to dewater the basin allowing for adequate residence time in the basin.

This sediment control measure should not be used where failure of the embankment can endanger life or property.

Because a sediment basin can potentially store a significant amount of water, a specific design will typically be required. The Erosion and Sediment Control plan sheets should provide specific design details for each basin, based on the design computations. In most circumstances, a separate plan sheet will be needed to show these details. The details shown on this plan sheet should include the following:

1. The design storm event.

2. The area, in acres, draining to the basin and the curve number used for runoff computations.

3. Construction details for any embankment that may be required.

4. The design storage elevation.

5. The required storage volume.

6. The crest elevation and width for the overflow spillway.

7. Details for the outlet pipe and riser.

8. Other details as appropriate.

See Figure 205-3H for an example of the deign details.

205-3.01(06) Temporary Stable Construction Entrance

A temporary stable construction entrance is a sediment control measure consisting of a stabilized aggregate pad over geotextile. A temporary construction entrance is used where construction traffic will be coming from a construction site to an adjoining public right of way, street, alley, sidewalk, or parking area minimizing the tracking of mud and sediment onto a public roadway. See the INDOT *Standard Drawings* E 205-TECP-01 for details. The designer should use the minimum values of 100 tons of No. 2 stone and 235 yd^2 of geotextile when estimating quantities. This should be sufficient to provide two stable construction entrances. The designer will

determine the need for additional construction entrance quantities based on the number of road and stream crossings within the project limits.

205-3.02 Slope

The following measures are used to temporarily control erosion on a slope. They include diversion interceptor and slope drain, vegetative strip in a cut or fill section, temporary seeding and temporary mulch, erosion control blanket, and surface roughening.

205-3.02(01) Diversion Interceptor

1. Type A, Embankment Diversion**.** An embankment diversion is a storm water control measure consisting of a temporary ridge, excavated channel, or combination thereof constructed across a slope to collect storm water runoff and divert it to a treatment device with a stable outlet. An embankment diversion should have the capacity to accommodate a maximum drainage area of 3 acres. The side slopes should be 2:1 or flatter with a top ridge or bottom channel width of 2 ft allowing for 6 in. of freeboard.

2. Type B, Water Bar or Transverse Diversion. This consists of a series of small ridges, or ridges and channels, used to intercept and divert storm water runoff from a long narrow corridor such as a haul road. Diverted storm water should be discharged into a treatment device with a stable outlet. The length of a water bar should not exceed 100 ft. Its grade should not exceed 2% towards the outlet. Ridge height should be a minimum of 9 in. from the down slope ground level to the top of settled ridge. Water-bar spacing shall be as shown in Figure 205-3 I, Spacing for Diversion Type B.

3. Type C, Perimeter Diversion. This is used to collect offsite runoff before it enters the project site. A maximum drainage area of 5 acres is allowed before additional considerations are required by the designer. A perimeter diversion consists of a stable channel and supporting ridge constructed across a slope to collect storm water runoff and divert it to a stable outlet. Side slopes should be 2:1 or flatter with a minimum ridge top or channel bottom width of 2 ft, allowing 6 in. of freeboard and stabilized with vegetation unless a ditch grade of 6% or steeper warrants the use of riprap with geotextile. The runoff diverted away from the project site will be exempt from using a sediment treatment measure. However, a stable outlet may be needed in order to release water onto stable terrain. Perimeter diversion measures remain in place for the duration of construction.

See the INDOT *Standard Drawing* E 205-TECS-01and E 205-TECS-04 for details.

205-3.02(02) Slope Drain

A slope drain is a pipe drain used in conjunction with a diversion interceptor to convey runoff down a slope without causing erosion. A diversion interceptor with a slope drain should be specified at the top of a fill or cut slope to divert runoff from the top of the embankment and control where the runoff is discharged. Where the cut or fill height exceeds 10 ft, a slope drain should be used. The INDOT *Standard Drawings* E 205-TECS-02 & E 205-TECS-03 specifies the pipe diameter and its drainage area. This information should be used in determining the spacing of slope drains.

The contractor should be permitted to use a temporary pipe slope drain or an open slope drain. The slope drain should be lengthened as the embankment is extended upward. A slope drain should not be outlet directly into a stream due to the possible conveyance of sediment from the top of the embankment. Instead, it should be outlet onto a riprap splash pad and into another sediment control measure.

205-3.02(03) Temporary Seeding and Temporary Mulch [Rev. Mar. 2015]

Temporary seeding and mulch are used to reduce erosion and sedimentation damage by means of stabilizing a disturbed area where additional work is not scheduled for at least 7 calendar days. Temporary seeding reduces problems associated with mud or dust from bare soil surfaces during construction. It also reduces sediment runoff downstream by providing temporary stabilization. Mulch protects the soil from the impact of wind and water, prevents the soil from crusting, conserves moisture, and promotes seed germination and growth.

The pay quantity for temporary seeding and temporary mulch should be determined in accordance with Section 17-6.0 Temporary Seeding and Temporary Mulch.

205-3.02(04) Manufactured Surface Protection Products and Surface Roughening

If manufactured surface protection products or erosion control blankets are required as a permanent measure, and the special provisions require their early installation, such measures may be used as a temporary erosion control measure. Although surface roughening is required by the INDOT *Standard Specifications* for construction of erosion control methods, the designer need not consider surface roughening as part of the temporary erosion and sediment control plan.

205-3.03 Side Ditch

The measures used to control sediment in a side ditch include check dam, sediment trap, and grass or riprap-lined channel. Figure 205-3J shows the measures to be used with a disturbed ditch. Figure 205-3K shows the measures to be used with an undisturbed ditch.

205-3.03(01) Check Dam

A check dam is used to reduce erosion and control sediment in a drainage channel by slowing the velocity of the flow. A check dam is used in a channel that is degrading but where permanent stabilization measures are impractical due to their short period of usefulness. It is also used in eroding channels where construction delays or weather conditions prevent timely installation of erosion-resistant linings. A check dam should not be used in jurisdictional waters.

A check dam is an appropriate erosion control measure for a drainage area of 2 acres or less. For a drainage area of more than 2 acres, other erosion and sediment control measures will be needed. A revetment-riprap check dam should be specified for use if it will be outside the construction clear-zone. A traversable check dam should be specified only if it will be inside the construction clear-zone, or for site specific needs. See the INDOT *Standard Drawing* E 205-TECD-01 for details. In any case, the check dam should be wide enough to traverse the ditch section so as to force water to flow over the check dam instead of around the ends.

The cross section for a revetment-riprap check dam is shown in the INDOT *Standard Drawings*. The check dams should be spaced such that the top of the downstream check dam is at the same elevation as the toe of the adjacent upstream check dam. For a traversable check dam, the spacing should be calculated, although it is not necessary to show the spacing on the plans.

205-3.03(02) Modified Check Dam

A modified check dam is used as an erosion and sediment control measure to filter runoff water at critical points along the ditch line. It includes an additional layer of filter stone as shown in the INDOT *Standard Drawing* E 205-TECD-01. At a minimum, the locations within the project limits that require a modified check dam are as follows:

1. on the flatter of the 2 slopes at a grade break of 1% or more in a ditch line;

2. at a pipe inlet or stream crossing where right-of-way limitations prohibit the placement of a sediment trap or sediment basin as described in sections 3.01(04) and 3.01(05);

3. the final check dam location prior to placement of a sediment trap or basin; or

4. at the final check dam location prior to water entering a permanent vegetated ditch.

Unless otherwise specified, one fourth of the check dams, evenly distributed, shall be modified check dams. If the geotechnical report indicates erosive soils, modified check dams shall be used throughout the project limits. However, this measure is not to be used where the contractor will have difficulty accessing the dam for maintenance.

205-3.04 Inlet Protection [Rev. Jul. 2016]

Prevention of sedimentation of a stream includes protection of storm water inlets. Inlet protection is used to keep sediment from entering an inlet, allowing for full operation of the storm-drain system during the construction period. Inlet protection is needed for any inlet where the project plans will create disturbed area within the inlet catchment area. In order to adequately protect an inlet, it may be necessary to combine inlet protection with other erosion and sediment prevention measures. Inlet protection should also be provided for an inlet in a paved area where there is a potential for sediment to wash onto the road from surrounding areas or be tracked by construction equipment.

The contractor has the option of using sandbag, or basket-insert inlet protection for a curb or deck inlet. A maximum drainage area of 1 acre applies to the sandbag method. A maximum drainage area of 0.25 acre applies to the bag-insert method. If the drainage area is greater than 1 acre per inlet, additional measures should be used in conjunction with the inlet-specific protection measures described here.

See the INDOT *Standard Drawings* series 205-TECI for details.

205-3.05 Quantities [Added Jul. 2016]

Most contracts will include two pay items Storm Water Quality Management Budget and Storm Water Quality Control Plan (SWQCP). Pay quantities Storm Water Quality Management Budget and Storm Water Quality Control Plan (SWQCP) should be determined in accordance with Section 17-6.0.

205-4.0 STORM WATER QUALITY MANAGER [ADDED MAR. 2016]

The designer must identify a Storm Water Quality Manger (SWQM) as Level 1 or Level 2 for each contract. A contractor's Level 1 SWQM must have completed the Department's Construction Storm Water Training course and hold a current training verification document for that course. A Level 2 SWQM must meet the Level 1 requirements and hold a current certification as a Certified Erosion

Sediment and Storm Water Inspector (CESSWI), or a CESSWI In-Training, or a Certified Inspector of Sediment and Erosion Control (CISEC), or a CISEC In-Training, or a Certified Professional in Erosion and Sediment Control (CPESC), or a CPESC In-Training, or an approved equivalent.

An initial SWQM level recommendation will be provided by the Environmental Services Division (ESD) as an item in the project commitments. Guidelines for recommending a SWQM Level 2 are not definitive but may include unfavorable soils, very tight right of way, nearby sensitive resources, or major environmental impacts. It is ultimately the designer's responsibility to coordinate with the ESD and the Area Engineer and to indicate the appropriate SWQM level for each project.

205-5.0 REFERENCES [REV. JUL 2016]

The designer should be familiar with the following references that pertain to erosion and sediment control design.

1. *Indiana Administrative Code*, Indiana General Assembly-Indiana Register, 327 IAC 15-5. Available at http://www.in.gov/legislative/ic/code/titile8/ar23/ch6.html

2. *Federal Register*, Final Rule. 40CFR Chapter 1 Part 9, 122, 123, 124.

3. *Indiana Storm Water Quality Manual*. Available at http://www.in.gov/idem/4899.htm, Chapter 7.

4. *Web Soil Survey*. USDA, Natural Resources Conservation Service . Available at ttp://websoilsurvey.sc.egov.usda.gov/App/HomePage.htm, USDA, Natural Resources Conservation Service.

5. *Streamstats*. Available at http://water.usgs.gov/osw/streamstats/indiana.html, United States Geological Survey

6. *Precipitation Frequency Data Server*. Available at http://hdsc.nws.noaa.gov/hdsc/pfds/pfds_map_cont.html?bkmrk=in, NOAA, National Weather Service

EROSION AND SEDIMENT CONTROL PLAN
TECHNICAL REVIEW CHECKLIST

The following is a check list of items that are required to be addressed on all Erosion and Sediment Control plans. *(The plans must include appropriate legends, scales, and north arrow.)*

PROJECT INFORMATlON

Yes	No		
☐	☐	1A	Project location map (Show project in relation to other areas of the county.)
☐	☐	1B	Narrative describing the nature and purpose of the project
☐	☐	1C	Location of planned and/or existing roads, utilities[1], structures, highways, etc.
☐	☐	1D	Building locations[2]
☐	☐	1E	Land use of adjacent areas (*Show the entire upstream watershed and adjacent areas within 500ft of the property lines.*)[3]

TOPOGRAPHIC, DRAINAGE, AND GENERAL SITE FEATURES

Yes	No		
☐	☐	2A	Existing vegetation *(Identify and delineate.)*
☐	☐	2B	Location/name of all wetlands, lakes, and water courses on and adjacent to site
☐	☐	2C	100-year floodplains, floodway fringes, and floodways *(not applicable if none.)*[4]
☐	☐	2D	Soils information *(If hydric soils are present, it is the responsibility of the owner to investigate the existence of wetlands and obtain appropriate permits.)*[5]
☐	☐	2E	Existing/planned contours[6] at intervals appropriate to indicate drainage patterns
☐	☐	2F	Locations where off-site drainage will enter the site, along with the drainage area at each location and drainage area delineations as required.[7]
☐	☐	2G	Locations of specific points where stormwater discharge will leave the site
☐	☐	2H	Identify all receiving waters *(If discharge is to a separate municipal storm sewer, identify the name of the municipal operator and the ultimate receiving water.)*
☐	☐	2I	Potential areas where storm water may enter groundwater *(note if none.)*

[1] Use best available information.
[2] Within project area.
[3] Attach the appropriate United States Geological Survey topographic map.
[4] This item is satisfied by showing the 100-year flood elevation on the plans.
[5] No formal submittal from the designer is necessary for this item.
[6] Profiles or contours where available.
[7] Where a defined channel is present, the drainage area and stream name should be labeled. Drainage area delineation is required only where no channel is present.

Back

☐	☐	2J	Location of storm water system *(Include culverts, storm sewers, channels, and swales.)*

LAND-DISTURBING ACTIVITIES

Yes	No		
☐	☐	3A	Location and approximate dimensions of all disturbed areas *[i.e., construction limits] (Areas where vegetation cover will be preserved should clearly be designated.)*
☐	☐	3B	Soil stockpiles and borrow areas[8] *(Show location or note if none.)*

EROSION AND SEDIMENT CONTROL MEASURES

Yes	No		
☐	☐	4A	Sequence of each measure to be implemented[8] *(Relative to earth-disturbing activities.)*
☐	☐	4B	Monitoring and maintenance guidelines for each measure[9]
☐	☐	4C	Perimeter sediment control measures *(Location, construction detail, dimensions, specifications.)*
☐	☐	4D	Temporary seeding *(Specifications including seed mix, fertilizer, lime, and mulch rates.)*[9]
☐	☐	4E	Temporary erosion and sediment control measures *(Location, construction detail, dimensions, specifications.)*
☐	☐	4F	Permanent erosion and sediment control measures *(Location, construction detail, dimensions, specifications.)*
☐	☐	4G	Storm drain inlet protection *(Location, construction detail, dimensions, specifications.)*
☐	☐	4H	Storm drain outlet protection *(Location, construction detail, dimensions, specifications.)*
☐	☐	4I	Stable construction entrance *(Location, construction detail, dimensions, specifications.)*[7]
☐	☐	4J	Permanent seeding *(Specifications including seed mix, fertilizer, lime, and mulch rates.)*[8]

[8] To be submitted by the contractor following contract award.
[9] This item addressed in Indiana Department of Transportation *Standard Specifications.*

Back

Slope, *a*:1 (Grade, %)*	Maximum Slope Length, *B***
Flatter than 50:1 (< 2%)	100 ft
50:1 ≤ Slope < 20:1 (2% ≤ Grade < 5%)	80 ft
20:1 ≤ Slope < 10:1 (5% ≤ Grade < 10%)	50 ft
10:1 ≤ Slope < 5:1 (10% ≤ Grade < 20%)	30 ft
5:1 or Steeper (≥ 20%)	20 ft

* *Steepest portion of the slope.*

** *The length of the slope above the fence that will be contributing runoff. This is not to be interpreted as a spacing distance between multiple rows of fence down a slope. Multiple or terraced rows of silt fence are not an approved application of this sediment-control measure.*

Figure 205-3B should be used with this figure.

SLOPE LENGTH FOR SILT FENCE

Figure 205-3A

Back

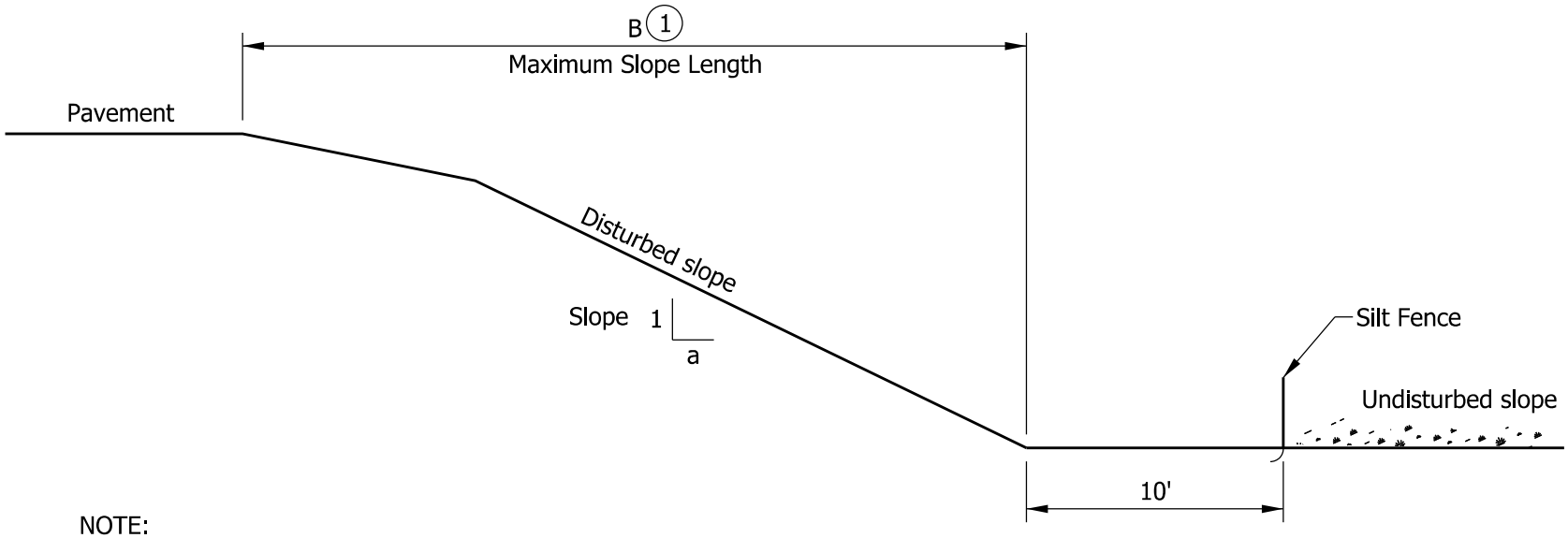

NOTE:

(1) See Figure 205-3C for B.

SILT FENCE APPLICATION

Figure 205-3B

Back

Slope, *a*:1 (Grade, %) *	Minimum Recommended Filter Width, *B*	Maximum Slope Length, *C* **
Flatter than 20:1 (< 5%)	20 ft	80 ft ≤ *C* < 100 ft
20:1 ≤ Slope < 10:1 (5% ≤ Grade < 10%)	40 ft	50 ft ≤ *C* < 80 ft
10:1 ≤ Slope < 5:1 (10% ≤ Grade < 20%)	60 ft	30 ft ≤ *C* < 50 ft
5:1 or Steeper (≥ 20%)	80 ft	20 ft ≤ *C* < 30 ft

* *Steepest portion of the slope*

** *Length of the slope above the filter strip that will contribute runoff.*

Note: Figure 205-3D should be used with this figure.

MINIMUM FILTER-STRIP APPLICATION

Figure 205-3C

Back

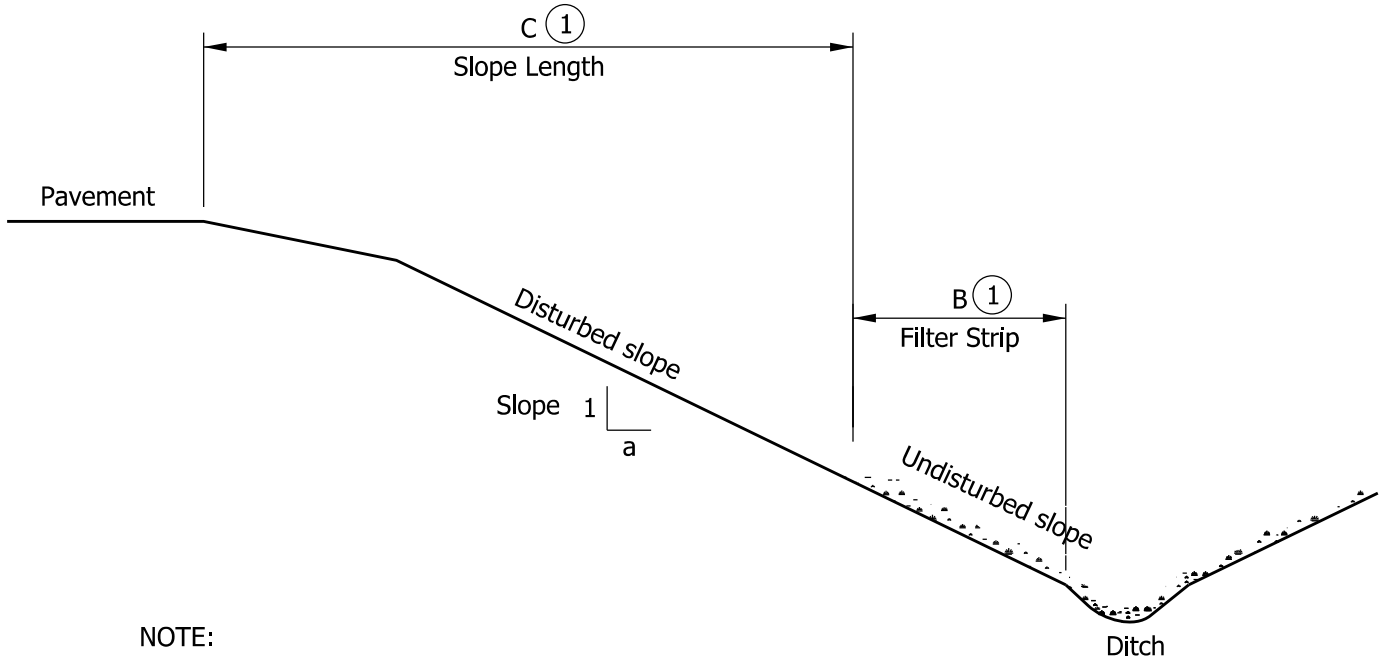

NOTE:

1 See Figure 205-3C for B and C.

VEGETATIVE FILTER STRIP APPLICATION

Figure 205-3D

Back

Spillway Height (ft)	STORAGE CAPACITY, ft^3 / SPACING, ft														
	2:1 Foreslope, 2:1 Backslope Ditch Grade, up to:					3:1 Foreslope, 2:1 Backslope Ditch Grade, up to:					3:1 Foreslope, 3:1 Backslope Ditch Grade, up to:				
	2%	3%	4%	5%	6%	2%	3%	4%	5%	6%	2%	3%	4%	5%	6%
2.0	388/67 *	247/43 *	177/33 *	141/27 *	141/20 *	460/83 *	317/53 *	247/40 *	176/33 *	177/27 *	565/100	388/67	283/50	212/40	177/33
2.5	741/127	494/87	388/63	282/50	247/43	918/160	636/107	459/80	388/63	317/53	1130/193	742/127	565/97	459/77	388/63
3.0	1271/220	847/147	635/110	529/90	423/73	1624/277	1059/183	812/137	636/110	529/93	1942/333	1271/220	953/167	777/133	636/110

** This spacing is for information only. Use the minimum spacing from Figure 205-3G instead.*

SEDIMENT TRAP IN V-DITCH

Figure 205-3E

Back

Spillway Height (ft)	STORAGE CAPACITY, ft^3 / SPACING, ft														
	3:1 Foreslope, 3:1 Backslope Ditch Grade, up to:					4:1 Foreslope, 3:1 Backslope Ditch Grade, up to:					4:1 Foreslope, 4:1 Backslope Ditch Grade, up to:				
	2%	3%	4%	5%	6%	2%	3%	4%	5%	6%	2%	3%	4%	5%	6%
2.00	565/77 *	565/77 *	423/57	353/47	283/37	953/130	635/87	460/63	388/53	317/43	1059/147	706/97	530/73	424/60	353/47
2.50	1553/217	1060/143	777/110	636/87	530/73	1766/247	1165/193	883/123	706/100	600/83	1942/280	1306/187	953/140	777/113	636/93
3.00	2578/367	1730/243	1271/183	1024/147	848/123	2896/420	1942/280	1448/210	1165/167	953/140	3213/477	2154/317	1624/237	1271/190	1059/160

Note: The values are calculated for a 3-ft width flat-bottom ditch. They are also suitable for use for a 4-ft width ditch, due to the proximity of the values.

SEDIMENT TRAP IN FLAT-BOTTOM DITCH

Figure 205-3F

Back

Spillway Height, ft	Ditch Grade, up to:				
	2%	3%	4%	5%	6%
2.0	100	70.0	50.0	40.0	35.0
2.5	125	84.0	65.0	50.0	40.0
3.0	150	100	75.0	60.0	50.0
3.5	175	117	90.0	70.0	60.0

FLOOD-POOL LENGTH (ft)

Figure 205-3G

Back

NOTES:

1. When basin design is cut into the site's contours to meet capacity, the designer should include a stable surface for water to flow into the basin to prevent the slope from eroding. The design should include a riprap pad twice the channel width to slow and disperse water into the basin.

2. Riprap channel shall extend 20' beyond the overflow toe at the dike and be discharged into a stable vegetated channel.

3. Basin shape varies and must have min. length-to-width ratio of 2:1.

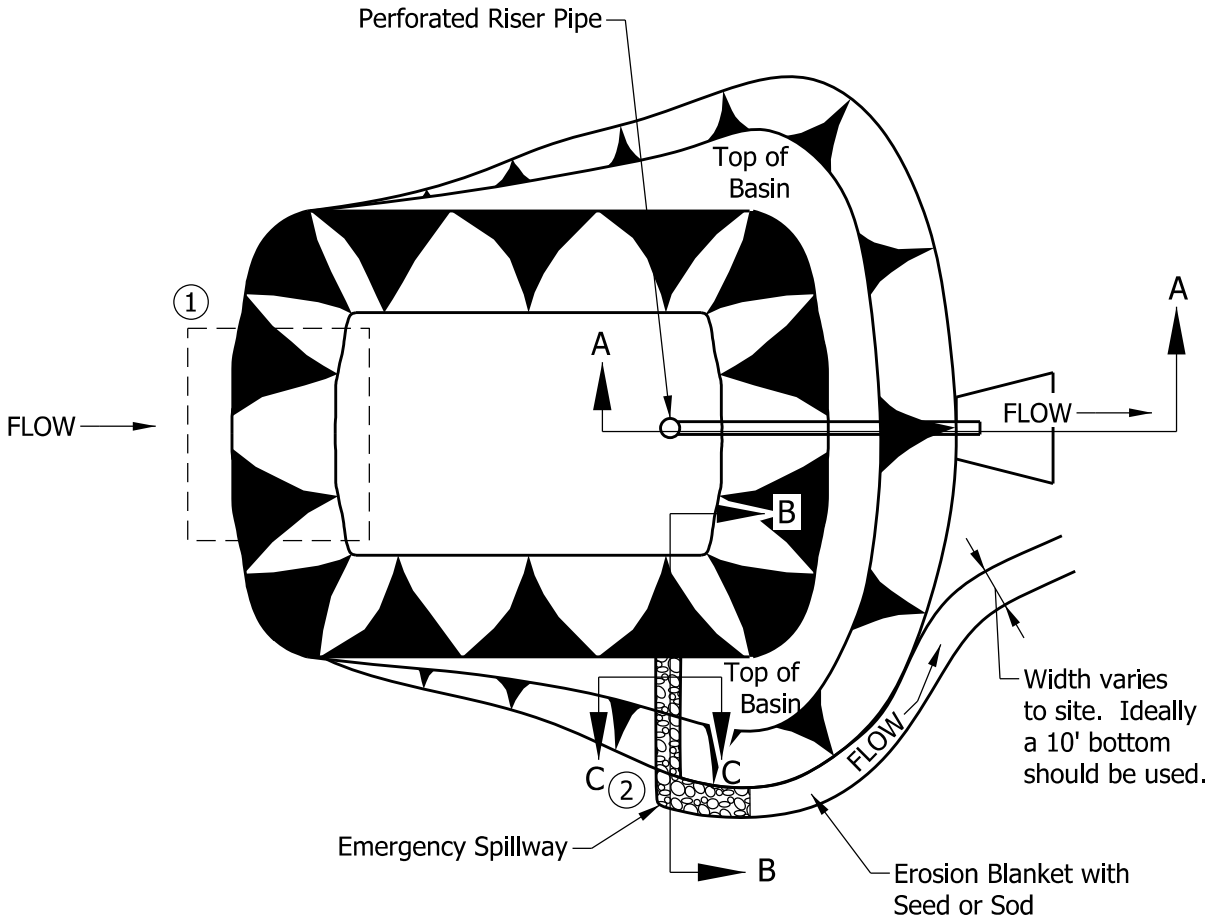

PLAN VIEW

SEDIMENT BASIN

Figure 205-3H
(Page 1 of 3)

Back

NOTES:

1. Earth dam paid in accordance with 203. Soil for use in embankment will be as recommended by the geotechnical report.

2. Keyway trench runs the length of the embankment if necessary for stability. See the geotechnical report for further guidance.

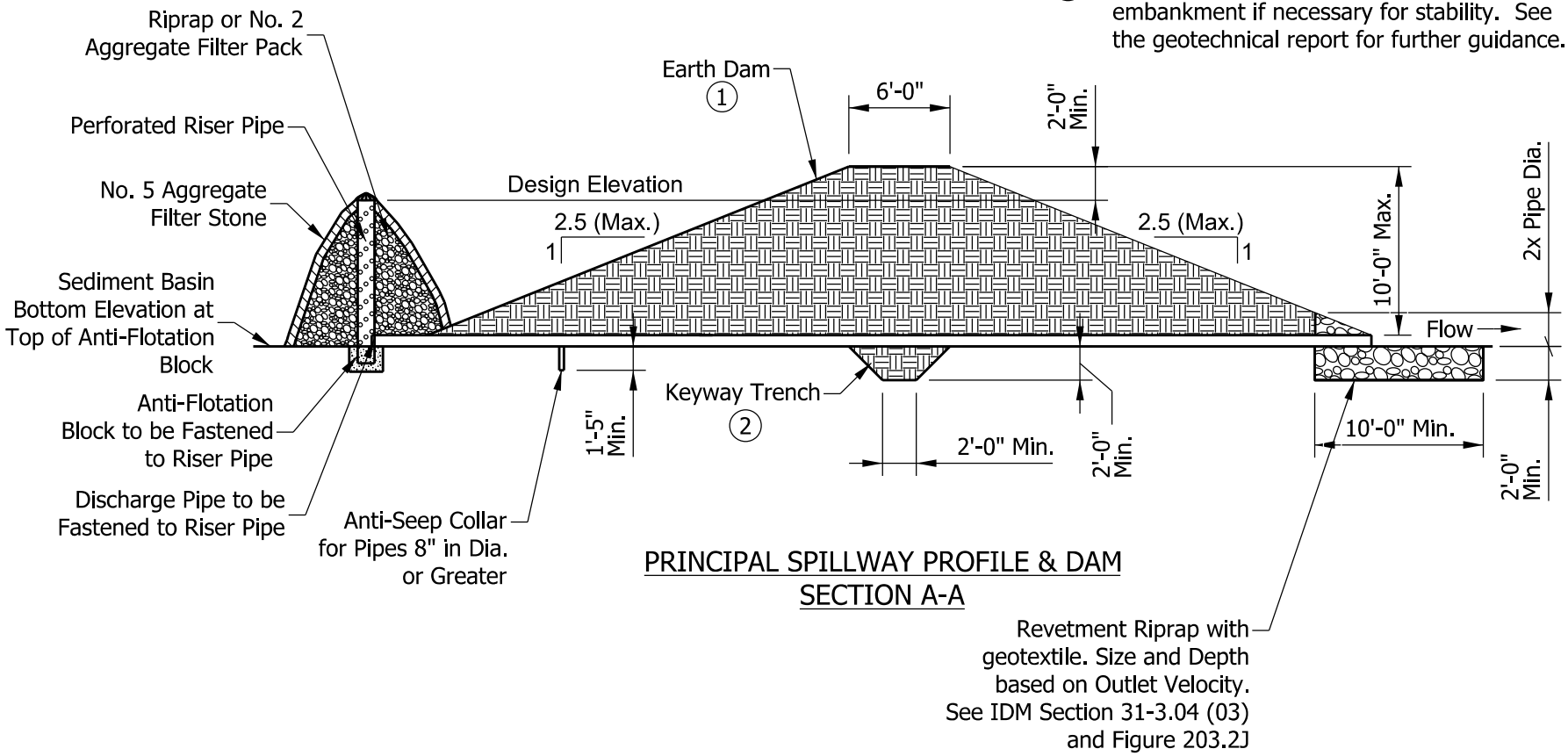

PRINCIPAL SPILLWAY PROFILE & DAM SECTION A-A

SEDIMENT BASIN

Figure 205-3H
(Page 2 of 3)

Back

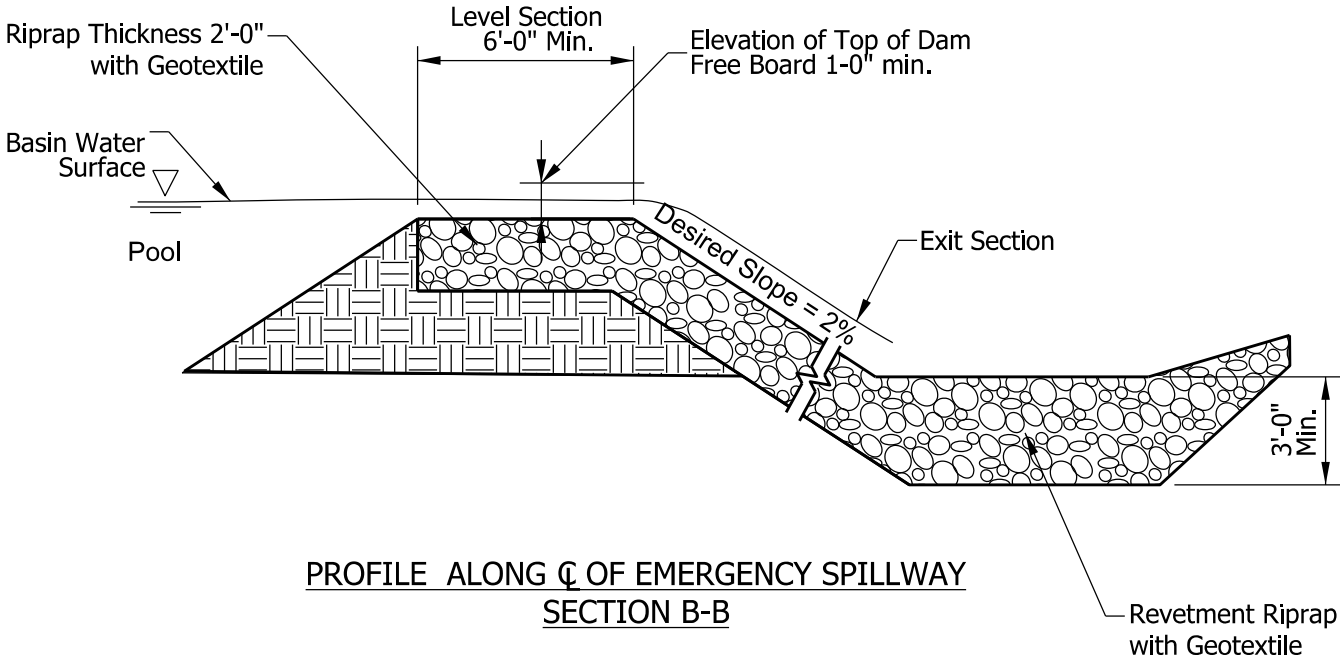

PROFILE ALONG ℄ OF EMERGENCY SPILLWAY
SECTION B-B

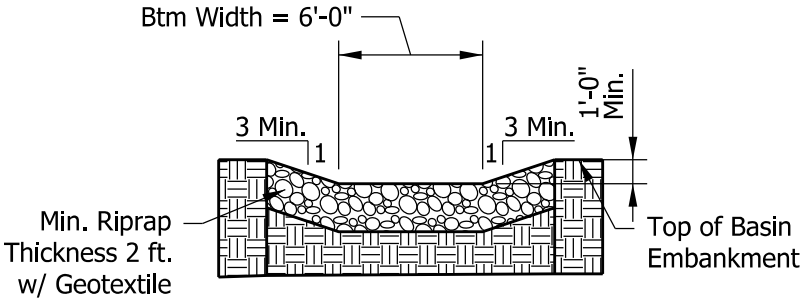

CROSS SECTION AT EMERGENCY SPILLWAY
SECTION C-C

SEDIMENT BASIN

Figure 205-3H
(Page 3 of 3)

Back

Slope, S	Grade, G	Spacing
$< 5\%$	$< 20:1$	125 ft
$5\% \leq S < 10\%$	$20:1 \leq G < 10:1$	100 ft
$10\% \leq S < 20\%$	$10:1 \leq G < 5:1$	75 ft
$20\% \leq S < 33\%$	$5:1 \leq G < 3:1$	50 ft
$\geq 33\%$	$> 3:1$	25 ft

SPACING FOR DIVERSION TYPE B

Figure 205-3 I

Back

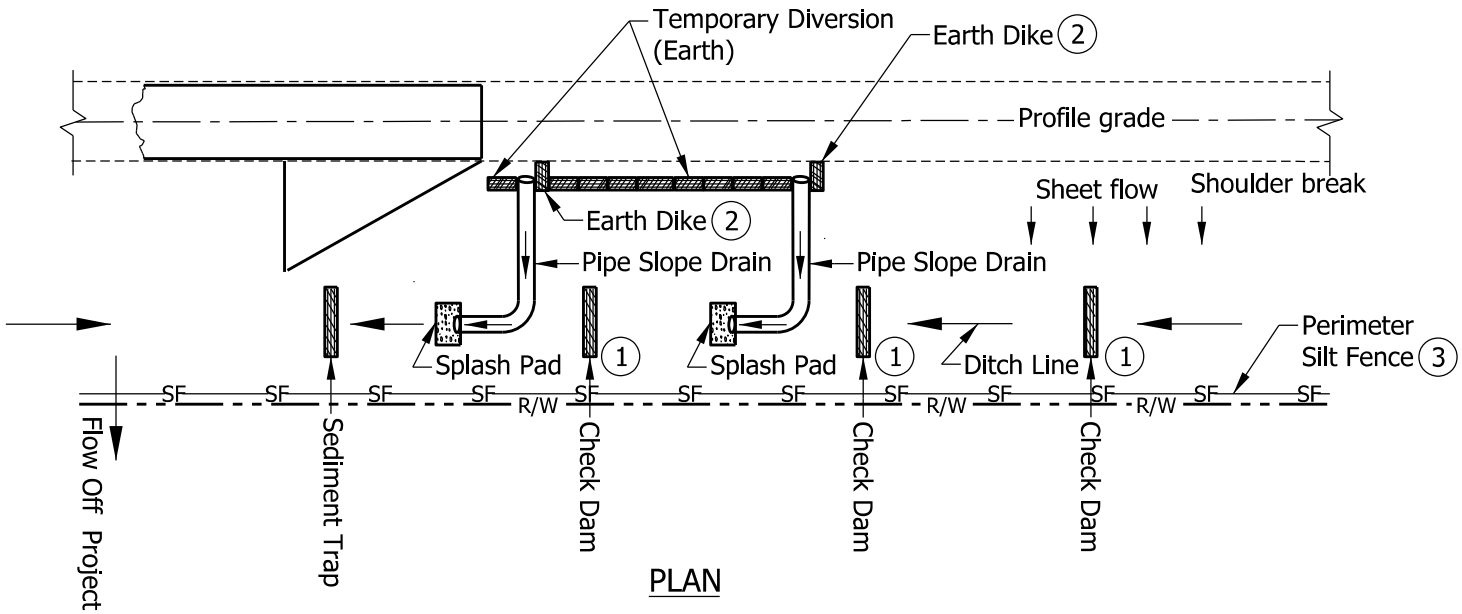

PLAN

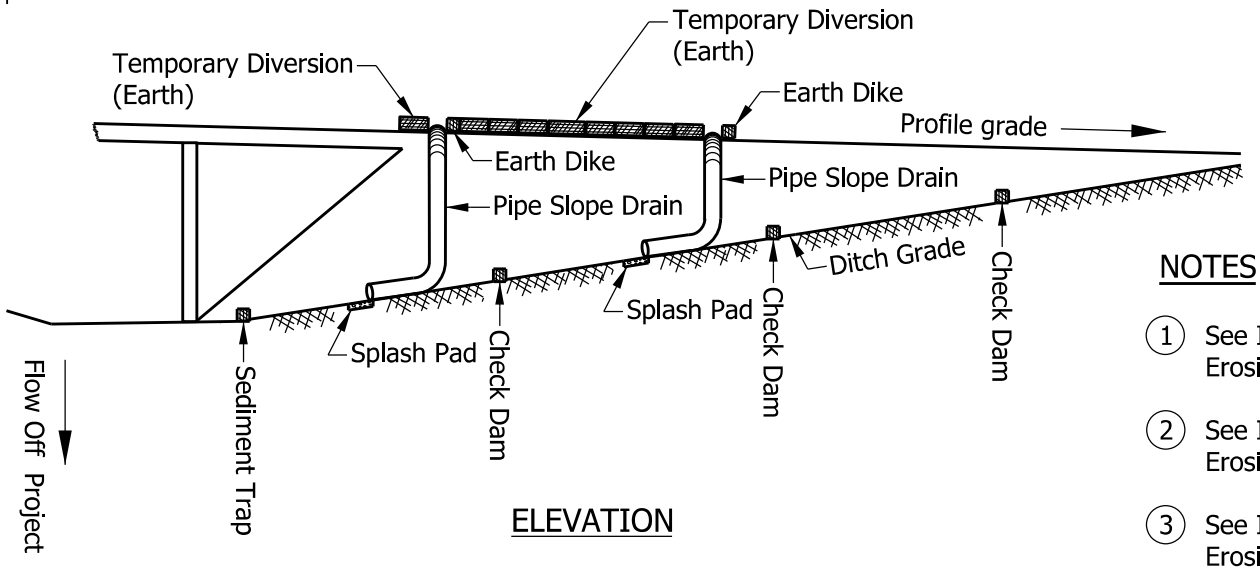

ELEVATION

NOTES:

1. See INDOT Standard Drawings Temporary Erosion Control Ditch series.
2. See INDOT Standard Drawings Temporary Erosion Control Slope series.
3. See INDOT Standard Drawings Temporary Erosion Control Perimeter series.

DISTURBED SIDE DITCH TREATMENT

Figure 205-3J

Back

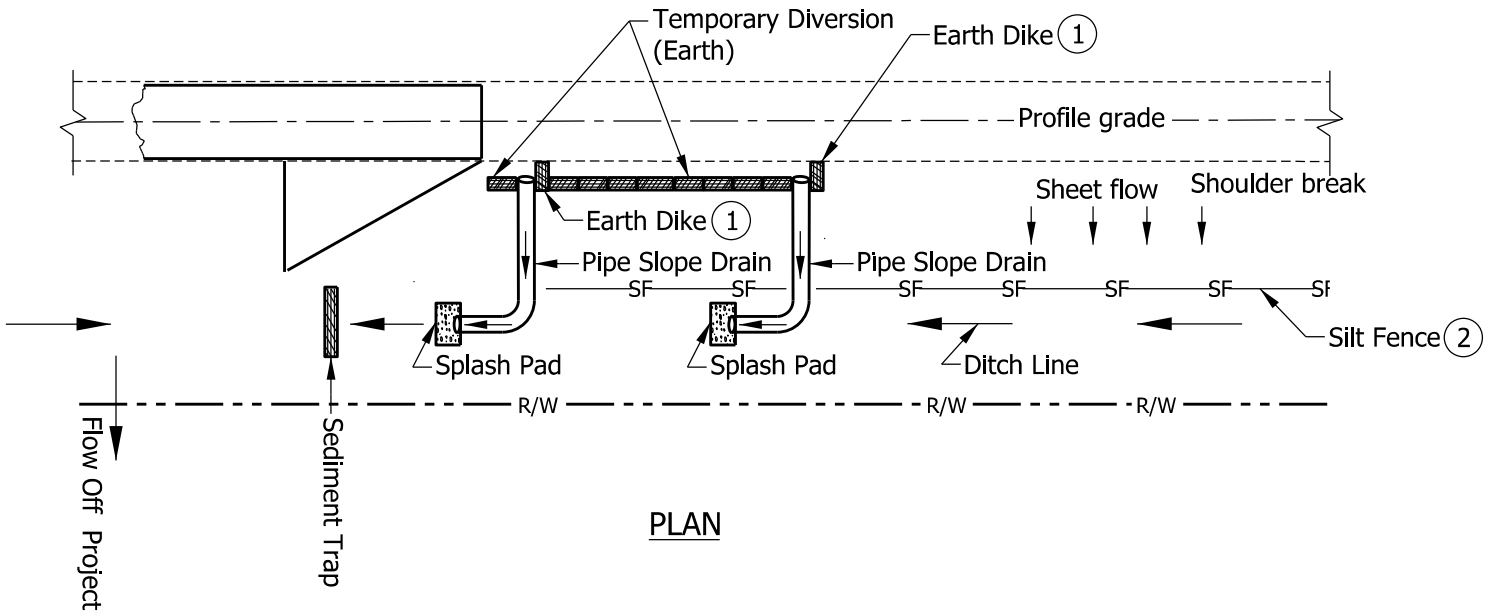

PLAN

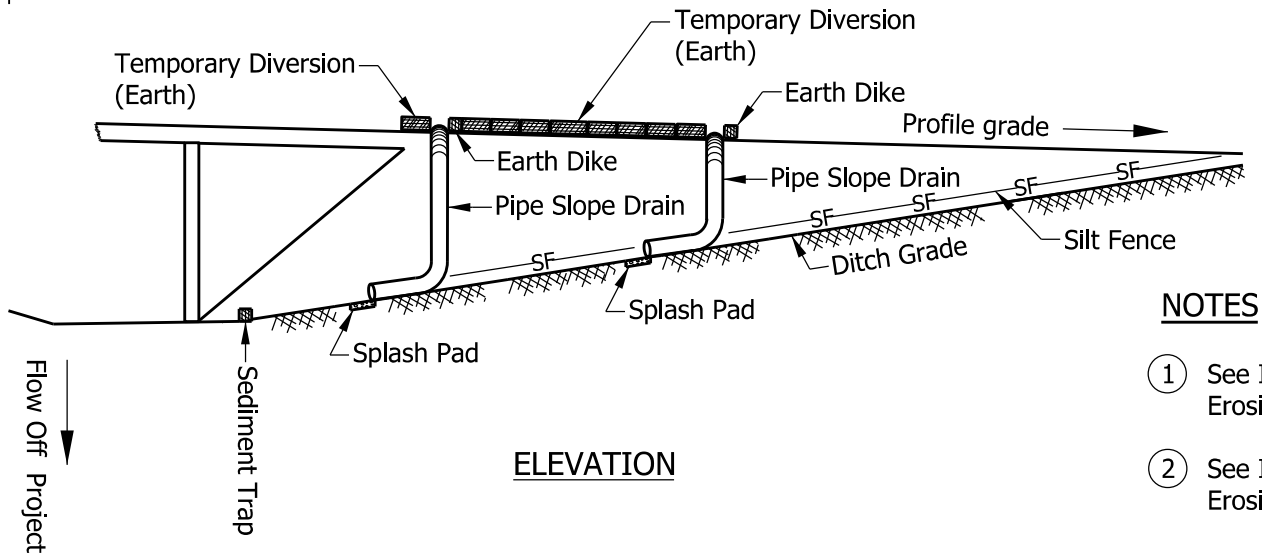

ELEVATION

NOTES:

1. See INDOT Standard Drawings Temporary Erosion Control Slope series.
2. See INDOT Standard Drawings Temporary Erosion Control Perimeter series.

UNDISTURBED SIDE DITCH TREATMENT

Figure 205-3K

Back