CHAPTER 410

Earth-Retaining System

NOTE: References to material in 2011 Design Manual have been highlighted in blue throughout this document.

TABLE OF CONTENTS

LIST OF FIGURES 5

410-1.0 INTRODUCTION 6
410-1.01 Consideration of an Earth-Retaining System 6
410-1.02 Aesthetics Considerations 6
410-1.02(01) Architectural Considerations 7
410-1.02(02) Earth-Retaining Structure Adjacent to Sidewalk or Shared-Use Facility 7
410-1.02(03) Stairway Access through Earth-Retaining Structure to Property 8
410-1.02(04) Use of Earth-Retaining Structure versus Steep but Maintainable Lawn 8
410-1.02(05) Urban- or Rural-Area Considerations 8
410-1.02(06) Miscellaneous Factors 9
410-1.03 Earth-Retaining System Classification 10

410-2.0 PLANS-PREPARATION PROCEDURES 10
410-2.01 Wall Types 10
410-2.02 Applications 10
410-2.03 Design Procedure 11
410-2.03(01) Responsibility 11
410-2.03(02) Design Methods 11
410-2.03(03) Wall-Selection Criteria 11
410-2.03(04) Contract-Documents Requirements 13

410-3.0 LIMIT STATES, LOAD FACTORS, AND RESISTANCE FACTORS 15
410-3.01 Limit States 15
410-3.01(01) Service Limit State 15
410-3.01(02) Strength Limit State 15
410-3.01(03) Extreme Event Limit State 15
410-3.02 Load Factors 16
410-3.03 Resistance Factors 16

410-4.0 CAST-IN-PLACE REINFORCED-CONCRETE CANTILEVER FILL WALL 16
410-4.01 Foundation Information 16
410-4.01(01) Overall Stability 16
410-4.01(02) Bearing Resistance 17
410-4.01(03) Limiting Eccentricity, or Overturning 17
410-4.01(04) Sliding Resistance 17
410-4.01(05) Passive Resistance 18
410-4.01(06) Structural Design 18
410-4.01(07) Seismic Design 18
410-4.01(08) Drainage 19
410-4.02 Stem Design 19

410-4.03 Footing Design 20
410-4.04 Shear-Key Design 20
410-4.05 Miscellaneous Design Information 21

410-5.0 RETAINING WALL WITH GROUND REINFORCEMENT, OR FILL WALL 21
410-5.01 Mechanically-Stabilized-Earth (MSE) Wall 21
410-5.01(01) Advantages and Disadvantages 22
410-5.01(02) Constraints and Conditions 23
410-5.01(03) Relative Costs 23
410-5.01(04) Description of MSE-Wall System 24
410-5.01(05) Selection Criteria 26
410-5.01(06) Design Criteria 27
410-5.02 Modular-Block Facing Units with Reinforced Backfill 28
410-5.02(01) Design Procedure 29
410-5.02(02) Summary of Design Requirements 34
410-5.03 Modular-Block Gravity Wall without Ground Reinforcement 35
410-5.03(01) Design Procedure 36
410-5.03(02) Design Considerations 36

410-6.0 PREFABRICATED MODULAR GRAVITY WALL, OR CUT WALL 37
410-6.01 General 37
410-6.02 Advantages and Limitations 37
410-6.02(01) Advantages 37
410-6.02(02) Limitations 38
410-6.03 Drainage 38
410-6.04 Design Considerations 38
410-6.04(01) Load Factors and Load Combinations 38
410-6.04(02) Resistance Factors 39
410-6.04(03) Lateral Earth Pressures 39
410-6.04(04) Sliding Resistance 39
410-6.04(05) Limiting Eccentricity Due to Overturning [Rev. Oct. 2012] 40
410-6.04(06) Bearing Resistance 40
410-6.04(07) Structural Design 41
410-6.04(08) Overall Stability 42
410-6.04(09) Lateral and Vertical Displacement 42
410-6.05 Prefabricated Concrete Bin Wall 42
410-6.05(01) General 42
410-6.05(02) Design Procedure 43
410-6.06 Metal Binwall 44
410-6.06(01) General 44
410-6.06(02) Design Procedure 44
410-6.07 Gabion Wall 45

410-6.07(01) Background 45
410-6.07(02) Design Procedure 46
410-6.07(03) Summary of Design Requirements 47

410-7.0 SPECIAL EARTH-RETAINING SYSTEMS 48
410-7.01 Steel-Sheet-Piling Nongravity Cantilever Wall 48
410-7.01(01) Design Procedure 48
410-7.01(02) Summary of Design Requirements 49
410-7.02 Soldier-Pile and Lagging Wall 49
410-7.02(01) General 49
410-7.02(02) Embedment Depth 49
410-7.02(03) Design of Timber Lagging 50
410-7.02(04) Design of Fascia Wall 50
410-7.02(05) Stage-Construction Check 50
410-7.02(06) Design of Bond Length 50
410-7.03 Drilled-Shaft Wall 51
410-7.04 Anchored Wall 52
410-7.04(01) Principles of Anchored-Wall Design 52
410-7.04(02) Earth-Pressure Distribution 54
410-7.04(03) Corrosion Protection 54
410-7.04(04) Determination of Anchor Spacing 54
410-7.04(05) Drainage 55
410-7.05 In-Situ-Reinforced Wall 55
410-7.05(01) Soil-Nailed Wall 55
410-7.05(02) Micropile Wall 57

410-8.0 REINFORCED SOIL SLOPES 62
410-8.01 Purpose of Reinforcement 62
410-8.02 Economics 63
410-8.03 References 64

FIGURES 65

LIST OF FIGURES

Figure	Title
410-1A	General Aesthetic Guidelines for Retaining Wall in Urban Area
410-1B	General Aesthetic Guidelines for Retaining Wall in Rural Area
410-1C	Classification of Earth-Retaining Systems
410-2A	Fill-Section Wall System Selection Chart
410-2B	Cut-Section Wall System Selection Chart
410-2C	Pay Quantity Limits for Wall-System Groups
410-2D	Wall Types and Classification of Earth-Retaining Systems
410-4A	Factor of Safety Against Sliding for Spread Footing
410-5A	Modular-Block-Wall Typical Section
410-5B	Types of Modular Blocks
410-5C	External-Stability Calculations, Sloping or Horizontal Backfill, B ≥ 0 deg
410-5D	External-Stability Calculations, Broken-Back Backfill, B > 0 deg
410-5E	Example A: Horizontal Backslope
410-5F	Example B: Broken-Back Backslope
410-5G	Modular Block Gravity Wall Analysis
410-6A	Broken-Back Slope, Simplified Example
410-6B	Sloping Backfill, Simplified Example
410-7A	Sheet-Piling Wall, Concrete Facing Detail
410-7B	Unstable Slope Warranting Drilled-Shaft System
410-7C	Anchored Wall Typical Section
410-7D	Soil Parameters for Soil-Nailed-Wall Design
410-7E	Micropile Retaining-Wall Cross Section
410-8A	Slope Reinforcement Using Geosynthetics to Provide Slope Stability
410-8B	Slope Reinforcement Providing Lateral Resistance During Compaction

CHAPTER 410

EARTH-RETAINING SYSTEMS

410-1.0 INTRODUCTION

The intent of this chapter is to inform designers, and earth-retaining-system manufacturers and suppliers, of the procedures and responsibilities associated with the preparation of plans for an earth-retaining system.

410-1.01 Consideration of an Earth-Retaining System

An earth-retaining system shall be considered in the situations as follows.

1. Right-of-way is too limited for constructing side slopes.
2. There is a proximate live-load surcharge which must remain in place. Such surcharges can include buildings, highways, or railroads.

410-1.02 Aesthetics Considerations

An earth-retaining system or retaining wall is one of the key road-design elements. Along with the direct function of holding back earth, it provides opportunities for aesthetic enhancement of transportation systems. A retaining wall acts as a link between various highway structures and adjacent land forms. Where multiple walls exist along a corridor, repetition of a similar design will provide continuity throughout that corridor. Therefore, the designer shall be aware of the total impact of retaining walls within the roadway corridor and determine how to treat them aesthetically so that they blend into the surrounding environment. The designer shall be conscious of the traveler's view of the wall as well as the view of those adjacent to the corridor.

Aesthetic elements surrounding a particular retaining wall are key to public acceptance of a wall project. Early in the wall-design process, all comments about the wall generated from public meetings shall be reviewed during the preliminary design and environmental-documentation process. Where possible, such comments shall be considered in the design.

There is often uncertainty associated with aesthetics and there is no universally accepted theory. Aesthetic qualities are the visual qualities that contribute to a perception of well-being and quality of life as defined by a cross-section of society.

Because of the uncertainties surrounding aesthetics, and the lack of a universally accepted theory of aesthetics, the following three-step process has been established toward full consideration of the aesthetic elements of a retaining wall. These steps shall be integrated and considered together, not as discrete individual actions. Aesthetics consists of a blending and balancing of materials such as wood, concrete, or steel, with design elements such as line, form, color, and texture, and architectural elements such as wall caps, parapets, fencing, etc.

410-1.02(01) Architectural Considerations

Determination shall be made as to whether to involve a landscape architect. Consideration shall be given to involving a landscape architect as follows.

1. The wall will exceed 10 ft in height.

2. Extenuating circumstances are present, regardless of wall height. For example, in a rural area, the public may request special aesthetic treatments to enhance a scenic area. Other examples include, but are not limited to, historic areas, tourist areas, or other public requests.

A landscape architect can provide important information, guidance, and early assistance with aesthetic considerations. Involving a landscape architect in the design process for an earth-retaining system will not only result in a more aesthetically-pleasing design, but it can also result in cost-savings. It is easier and more cost-effective to determine the real costs of a design rather than requiring expensive add-ons later.

410-1.02(02) Earth-Retaining Structure Adjacent to Sidewalk or Shared-Use Facility

A functional or decorative retaining wall can be placed where an existing retaining wall must be extended or replaced and matched. The need for such a wall will mostly likely occur in an urban or suburban area. Such a wall can be adjacent to a sidewalk, multi-use path, or trail that provides access to adjoining homes, businesses, or public-recreation facilities. Where the wall height is greater than 2.5 ft above the adjacent ground or walk, etc., a railing will be required to prevent pedestrians or children from falling from the wall to a lower level which can result in injury. A chain-link fence fabric shall be attached to the railing to prevent a person from crawling between or trapping their head between the horizontal railing members. The chain-link fence fabric shall be vinyl coated. The color of such coating shall be dark green, dark brown, or black to minimize the visibility of the fence fabric to a passer-by, property owner, etc.

410-1.02(03) Stairway Access through Earth-Retaining Structure to Property

A handrail shall be placed along each side of a stairway that provides pedestrian access to a property on the other side of a retaining wall. The width of the wall opening shall match the width of the existing stairway, but it shall not be less than 4 ft between handrails. The handrail-gripping surface shall be a minimum of 1½ in. from the adjacent surface of a wall, etc.

410-1.02(04) Use of Earth-Retaining Structure versus Steep but Maintainable Lawn

A retaining wall shall be considered along a street or highway to provide a more level lawn or to retain an embankment due to space restrictions, etc. Where the wall height is less than 2.8 ft above the adjacent ground, the property owner shall be consulted to determine if he or she prefers a steeper, but maintainable, lawn slope in lieu of a retaining wall. A maintainable slope shall not be steeper than 3:1. A stairway or, if necessary, an alternate ADA-compliant pedestrian-access route is still required.

410-1.02(05) Urban- or Rural-Area Considerations

Determination shall be made as to whether the wall will be placed in an urban or rural setting.

An urban setting is one generally dominated by structures with a variety of colors, textures, and architectural styles. The surrounding landscape is often more orderly and manicured, and involves incorporated areas.

A rural setting is more natural, may include agricultural or forested areas, and generally involves unincorporated areas.

1. Aesthetic Treatment of Wall in Urban Area. Aesthetic treatment shall be considered for a wall placed in an urban area. The large volume of users, as well as adjacent land owners, who view such a structure are increasingly demanding that it be aesthetically treated so as to reduce negative visual impacts that can result. See Figure 410-1A, General Aesthetic Guidelines for Retaining Wall in Urban Area.

2. Aesthetic Treatment of Wall in Rural Area. The extent of aesthetic treatment for a wall placed in a rural setting is dependent upon further classification. A rural highway can be classified as either a commercial or scenic route.

a. A commercial route carries high levels of commercial traffic, medium levels of commuter traffic and medium to low levels of tourist traffic. It can be either 2 lanes, or 4 lanes divided or undivided. It requires minimal aesthetic treatment.

b. A scenic route carries high levels of tourist traffic, and medium to low levels of commercial and commuter traffic. It is highly scenic, and passes through, links, or is adjacent to parks, tourist areas, recreational areas, or historic areas. It can be either 2 lanes, or 4 lanes divided or undivided. Priority will be given to the recreational driving experience and aesthetic treatment.

See Figure 410-1B, General Aesthetic Guidelines for Retaining Wall in Rural Area.

410-1.02(06) Miscellaneous Factors

Other factors to consider are as follows.

1. A wall shall not dominate the area of effective vision of the driver.

2. The wall shall be used to accommodate the mounting of necessary lighting fixtures.

3. The walls shall be extended to meet overpasses and bridge abutments.

4. The wall elevation shall follow the natural grade of the land.

5. The ends of the wall shall be tapered to meet adjacent slopes.

6. The wall shall be aligned to follow adjacent landforms or as required by roadway alignment.

7. Where possible, wall alignment shall be varied.

8. Backfill slopes shall not exceed 2:1 for revegetation.

9. Drainage shall be provided at the base of an upslope wall.

10. For consistency, fixtures, wall finishes, patterns, line, form, color, and texture shall be coordinated and repeated to emphasize continuity for the entire transportation system within a given locality.

410-1.03 Earth-Retaining System Classification

For a highway application, an earth-retaining system can be used for a grade separation, bridge abutment, slope stabilization, or excavation support. A system can be designed to provide adequate lateral support. However, the most important factors in design are cost and efficiency. Therefore, common wall systems are classified based on the factors that will govern their selection and use.

Earth-retaining systems are classified as shown in Figure 410-1C according to construction method such as fill or cut, and the mechanisms of lateral load support such as externally stabilized or internally stabilized. Fill wall refers to bottom-up construction. Cut wall refers to top-down construction. Using Figure 410-1C, each wall system is classified in two manners. For example, a soldier pile and lagging wall is classified as an externally-stabilized cut-wall system. A mechanically-stabilized-earth wall is classified as an internally-stabilized fill-wall system.

410-2.0 PLANS-PREPARATION PROCEDURES

410-2.01 Wall Types

The earth-retaining systems that have been approved by INDOT for inclusion into project plans are categorized into two groups. For a Group 1 system, the designer shall develop a complete design and set of plan details. For a Group 2 System, the designer will make only a conceptual application. The designer will review a contractor-chosen propriety design after the letting, through working drawings and computations. Figure 410-2A provides a listing of systems in a fill section by classification and group category. Figure 410-2B provides such a listing of systems in a cut section.

410-2.02 Applications

The cast-in-place reinforced-concrete retaining wall will be considered the basic system for each application. Another system type may be considered if it is more economical or provides unique solutions to site-specific problems.

A Group 1 system is non-proprietary, while a Group 2 system is proprietary. A Group 1 system may be solely included in a project. A Group 2 system must have competitive alternatives to be included in a project.

Many earth-retaining systems have proprietary features. Some companies provide services including design assistance, preparation of plans and specifications for the structure, supply of the manufactured wall components, and construction assistance.

410-2.03 Design Procedure

An appropriate earth-retaining system design shall be developed in accordance with this chapter. The project manager shall be provided with documentation of these decisions prior to the geotechnical investigation. A copy of all correspondence and computations for each suggested earth-retaining system shall be included. A copy of these documents shall be submitted with the structure type and size plans.

410-2.03(01) Responsibility

The designer will be responsible for all design and detailing where a cast-in-place rigid, semi-gravity wall or a non-gravity cantilever wall is specified.

The designer will be responsible for the conceptual application, external stability, and review of the proprietary design for another type of earth-retaining system.

At the Field Check Plans submission, the designer will provide the Office of Geotechnical Services with a set of plans including cross sections and the information as follows:

1. top and bottom elevations;
2. beginning and end stations; and
3. stations of step locations in the bottom of the wall.

410-2.03(02) Design Methods

An earth-retaining system shall be designed in accordance with the AASHTO *LRFD Bridge Design Specifications*, AASHTO *Guide Specifications for LRFD Seismic Bridge Design*, FHWA retaining-walls manuals, INDOT *Geotechnical Manual*, and the INDOT *Standard Specifications*.

410-2.03(03) Wall-Selection Criteria

Other considerations in determining the acceptability of a particular earth-retaining system shall include the following:

1. geotechnical constraints;
2. future uses of the site;
3. differential deflection or settlement of wall sections;
4. project-specific special features;
5. long- and short-term wall stability;
6. comparable degree of safety;
7. accessibility to construction site;
8. staged-construction limitations;
9. right-of-way limits;
10. site-imposed physical limitations;
11. seismic activity;
12. wall inundation;
13. aesthetics;
14. economics;
15. environment; and
16. construction-time constraints.

The decision to select an earth-retaining system shall consider technical feasibility and its economy compared with a cast-in-place retaining wall. With respect to economy, the factors to be considered are as follows:

1. earthwork situation, cut or fill;
2. wall area;
3. average wall height;
4. foundation conditions;
5. availability and cost of select backfill material;
6. availability and cost of required right of way;
7. complex horizontal and vertical alignment changes;
8. need for a temporary excavation support system;
9. traffic maintenance during construction; and
10. aesthetics.

Each earth-retaining system has different performance histories, and this can create difficulty in adequate technical evaluation. Some systems are more suitable as a permanent wall, others are more suitable as a low-height wall; some are more applicable for a rural area, while others are more suited for a suburban area. The selection of the most appropriate system will thus depend on the specific project requirements. See Figure 410-2D, Wall Types and Classification of Earth-Retaining Systems; Figure 410-2A, Fill-Section Wall-System Selection Chart; and Figure 410-2B, Cut-Section Wall System Selection Chart, for system-selection guidelines.

The Office of Geotechnical Services shall be informed of each potential system to be considered for a project, so that it can provide site-specific recommendations.

410-2.03(04) Contract-Documents Requirements

1. Final Plans and Design Requirements. Plans for a conventional cast-in-place reinforced-concrete retaining wall or a permanent sheet-pile wall shall be fully detailed to include, but not be limited to, plan view, elevation view, sections as required, reinforcement schedules, detail clarification, allowable bearing pressure, and bill of materials.

   Plans for another earth-retaining system shall include the project-specific information as follows:

   a. beginning and ending wall stations;

   b. elevations of top of wall at beginning and end of wall at 50-ft intervals, all profile break points, and roadways profile data at wall line;

   c. original and proposed ground profiles in front of and behind the retaining wall;

   d. cross sections at retaining-wall locations showing limits of excavation and backfill;

   e. horizontal wall alignment;

   f. details of wall appurtenances such as traffic barriers, copings, and drainage outlets;

   g. the locations and configurations of signs and lighting including conduit locations;

   h. right-of-way limits;

   i. construction-sequence requirements including traffic control, access, and staged-construction sequences;

   j. elevation of highest permissible level for foundation construction. Location, depth and extent of all unsuitable material to be removed and replaced;

   k. quantities table showing estimated wall area and quantities of appurtenances and traffic barriers;

l. elevations of bearing pads, locations of bridge seats, skew angle, and all horizontal and vertical survey control data at abutments including clearances and details of abutments;

m. extreme high water and normal water levels at stream locations;

n. allowable soil bearing pressure for a retaining wall with reinforced backfill;.

o. magnitude, location, and direction of external loads due to bridges, overhead signs or lights, and traffic and slope surcharges.

p. limits and requirements for drainage features beneath, behind, or through the earth-retaining structure;

q. special facing-panels treatments and module finishes or colors; and

r. critical soil properties that do not satisfy the minimum requirements set out in the INDOT *Standard Specifications*.

The plans shall be sealed and signed by a professional engineer. Such engineer will be responsible for the complete design of a cast-in-place concrete retaining wall or a permanent sheet-pile wall, and for the conceptual application and location of another earth-retaining system.

The maximum factored applied bearing pressure shall be calculated and compared to the factored soil-bearing resistance recommended in the geotechnical report. If the recommended factored soil-bearing resistance is less than the maximum factored applied bearing pressure, the Office of Geotechnical Services shall be contacted for additional guidance.

The limits for establishing pay quantities for each wall-system group shall be as shown in Figure 410-2C.

2. Special Provisions. A unique special provision shall be provided for an earth-retaining system not included in the INDOT *Standard Specifications* or the recurring special provisions. See Section 19-3.0 for the unique-special-provision preparation and approval procedure.

The feasibility of using an earth-retention system depends on the existing topography subsurface conditions and soil and rock properties. A comprehensive subsurface

exploration program is required to evaluate site stability, settlement potential, need for drainage, etc., before repairing a slope or designing a new type of earth-retaining system.

410-3.0 LIMIT STATES, LOAD FACTORS, AND RESISTANCE FACTORS

410-3.01 Limit States

410-3.01(01) Service Limit State

An earth-retaining system shall be investigated for excessive vertical and lateral displacement, and overall stability, at the service-limit state. Tolerable vertical and lateral deformation criteria shall be developed based on the function and type of wall, anticipated service life, and consequences of unacceptable movements to the wall and potentially affected nearby structures, both structural and aesthetic. Overall stability shall be evaluated at the service-limit state using limiting equilibrium methods of analysis.

The requirements of *LRFD* 10.6.2.2, 10.7.2.2, and 10.8.2.2 shall apply to the investigation of wall movements. For an anchored wall, deflections shall be estimated in accordance with *LRFD* 11.9.3.1. For an MSE wall, deflections shall be estimated in accordance with *LRFD* 11.10.4. The effects of wall movements on adjacent facilities shall be considered in the development of the wall design.

410-3.01(02) Strength Limit State

An earth-retaining system shall be investigated at the strength-limit state for bearing resistance failure, lateral sliding, excessive loss of base contact, pullout failure of anchors or soil reinforcements, and structural failure.

410-3.01(03) Extreme Event Limit State

The Extreme Event Limit state shall be considered in the design. The applicable load combinations and load factors specified in *LRFD* Table 3.4.1-1 shall be investigated. Unless otherwise specified, all resistance factors shall be taken as 1.0 in investigating the Extreme Event Limit state.

410-3.02 Load Factors

Load factors and load combinations shall be as described in *LRFD* 11.5.5 and *LRFD* Tables 3.4.1-1 and 3.4.1-2. The maximum and minimum load factors specified in *LRFD* Table 3.4.1-2 shall be considered in performing the stability analysis on the earth-retaining system. All applicable load combinations shall be investigated. For maximum and minimum load-factors applications, see *LRFD* Figures C11.5.5-1 and C11.5.5-2.

410-3.03 Resistance Factors

In conducting wall-stability analysis, resistance factors for sliding and bearing resistance shall be as described in *LRFD* 10.5. Resistance factors for a permanent earth-retaining system shall be as specified in *LRFD* Table 11.5.6-1.

410-4.0 CAST-IN-PLACE REINFORCED-CONCRETE CANTILEVER FILL WALL

410-4.01 Foundation Information

A cantilever wall consists of a base slab or footing from which a vertical wall or stem extends upward. Reinforcement is provided in both members to supply resistance to bending. A cantilever wall can be founded on spread footings or on piles. Pertinent soils information on loading conditions, foundation considerations, consolidation potential, and external stability is included in the geotechnical report.

Installation of structure backfill material behind a cantilever wall shall be with 1:1 backfill slopes. If site restrictions do not allow for the use of 1:1 structure-backfill slopes, a memorandum shall be submitted to the Office of Geotechnical Services requesting soil properties at the site. The memorandum shall be submitted at the Preliminary Field Check stage if possible. If 1:1 backfill slopes are not being used, more vigorous design methods shall be used.

410-4.01(01) Overall Stability

The overall stability shall be evaluated using limiting methods of analysis as described in *LRFD* 11.6.2.3.

410-4.01(02) Bearing Resistance

Bearing resistance shall be investigated at the Strength Limit state using factored loads and resistances, assuming the soil-pressure distributions as follows:

1. Wall Supported with a Soil Foundation. The vertical stress shall be calculated assuming a uniformly-distributed pressure over an effective base area as shown in *LRFD* Figure 11.6.3.2-1. LRFD Equation 11.6.3.2-1 shall be used to calculate vertical stress.

2. Wall Supported with a Rock Foundation. The vertical stress shall be calculated assuming a linearly-distributed pressure over an effective base area as shown in *LRFD* Figure 11.6.3.2-2. If the resultant is within the middle one-third of the base, *LRFD* Equations 11.6.3.2-2 and 11.6.3.2-3 shall be used. If the resultant is outside the middle one-third of the base, *LRFD* Equations 11.6.3.2-4 and 11.6.3.2-5 shall be used.

410-4.01(03) Limiting Eccentricity, or Overturning

In investigating wall overturning, vertical moments shall be taken about the centerline of the spread footing. Horizontal moments shall be taken about the bottom of the spread footing. The vertical effect of surcharge acting above the footing shall not be included in considering overturning. For a foundation on soil, the location of the resultant of the reaction forces shall be within the middle one-half of the base width. For a foundation on rock, the location of the resultant of the reaction forces shall be within the middle three-fourths of the base width.

410-4.01(04) Sliding Resistance

The requirements of *LRFD* 10.6.3.4 will apply.

The factored resistance against failure by sliding shall be taken as

$$RR = \varphi R_n = \varphi_\tau R_\tau + \varphi_{ep} R_{ep}$$

If the soil beneath the footing is cohesionless, the nominal sliding resistance between soil and foundation shall be taken as

$$R_\tau = V \tan \delta$$

Where

$\tan \delta = \tan \Phi f$ for concrete cast against soil, or

$0.8 \tan \Phi f$ for a precast-concrete footing.

For a footing on clay, the sliding resistance shall be taken as the lesser of the following:

1. the cohesion of the clay, or

2. where the footing is supported on at least 6 in. of compacted granular material, one-half the normal stress on the interface between the footing and the soil.

For a spread footing on rock, the footing shall be embedded into the rock a minimum of 6 in.

410-4.01(05) Passive Resistance

Passive resistance shall be neglected in wall-stability computations. Passive resistance may be considered only if the wall extends below the depth of maximum scour, freeze-thaw effect, or other disturbances. Only the embedment below the greater of these depths shall be considered.

410-4.01(06) Structural Design

The structural design of individual wall elements and the wall foundation shall be as described in *LRFD* Sections 5, 6, 7, and 8. Flexural and shear design is based on *LRFD* load factors of 1.35 for vertical earth pressure, 1.50 for lateral earth pressure, and 1.75 for lateral earth pressure from live-load surcharge. Concrete shall be class B for the footing and class A for the stem. Reinforcing-steel yield strength shall be 60,000 psi. Reinforcement required to resist the formation of temperature and shrinkage cracks shall be as described in *LRFD* 5.10.8.

410-4.01(07) Seismic Design

For a gravity or semi-gravity retaining wall, the pseudo-static approach developed by Mononobe and Okabe may be used to estimate the equivalent static forces of seismic loads. This method is described in *LRFD* Appendix A11.

410-4.01(08) Drainage

Backfill behind a retaining wall shall be properly drained. If drainage is not provided, the wall shall be designed for loads due to earth pressure, plus full hydrostatic pressure due to water in backfill.

If a wall is adjacent to a roadway or sidewalk, pipe drains shall be placed in back of the wall instead of weep holes. A pipe underdrain of 6 in. dia. shall be used, with the flow line at the bottom of a square course of fine aggregate, 2-ft by 2-ft. This system shall be discharged into a storm sewer or ditch. For rehabilitation of an existing retaining wall, plan details shall be developed to replace inadequate pipe underdrain systems. A minimum slope of 0.5% shall be used for pipe underdrains.

410-4.02 Stem Design

The criteria to be considered in designing the stem are as follows.

1. For stem height of at least 16 ft through 26 ft, the back face shall be battered 12V:1H. The rear face can be battered depending on the site requirements.

2. The minimum stem thickness is 12 in. for a stem with a constant thickness. The minimum stem thickness at the top is 10 in. for a battered stem. Stem thickness at the bottom is based on the load requirements or batter.

3. Stem height is determined from site conditions.

4. The stem shall be located so as to produce the most economical footing.

5. Shear stress in the wall shall be checked at the base of the stem.

6. No. 4 reinforcing bars spaced at 1’-6” shall be placed in the front of the stem as longitudinal and vertical temperature reinforcement.

7. Moment shall be determined at the base of the stem and where required for bar cutoffs.

8. Loads due to a railing or parapet on top of the wall shall not be applied simultaneously with loads from earth pressure. These are dynamic loads which are resisted by the mass of the wall and passive earth pressure.

9. For a wall within roadway clear zone, the stem shall be shielded with a TL-5 barrier, or designed to withstand the *LRFD* collision force.

410-4.03 Footing Design

For footing-design criteria, see Chapter 408. Additional criteria to be considered in designing the footing are as follows.

1. Minimum footing thickness is 1.5 ft for a spread footing, or 2 ft for a pile footing.

2. The bottom of the footing shall be placed at 3 ft below the finished ground line. If the finished ground is on a grade, the bottom of the footing shall be sloped to a maximum grade of 5%. If the grade is steeper than 5%, the footing shall be placed level and steps shall be used.

3. Maximum pile spacing in each row is 10 ft.

4. Maximum pile batter is 4V:1:H.

5. Piles shall be embedded 1 ft into the footing. Reinforcing steel shall be placed on the tops of the piles.

6. For a spread footing, reinforcing steel shall be placed with a 4 in. clearance from the bottom of the footing. The edge clear distance shall be 2 in.

7. The footing moment shall be determined at the face of the stem based on vertical loads and resultant soil pressure.

8. A design for heel moment without considering the upward soil or pile reaction is not required unless such a condition actually exists.

9. For the toe, shear shall be determined at a distance from the face of the stem equal to the effective distance, *d*, of the footing. For the heel, shear shall be determined at the face of stem.

410-4.04 Shear-Key Design

The criteria to be considered in designing the shear key are as follows.

1. The key shall be placed in line with the stem except under severe loading conditions.

2. The key width shall be 1 ft. The minimum key depth is 1 ft.

3. The key shall be placed in unformed excavation against undisturbed material.

4. The key shall be analyzed for the forces shown in Figure 410-4A, Factor of Safety Against Sliding for Spread Footing – Example.

5. The shape of a shear key in rock is determined from the site conditions.

410-4.05 Miscellaneous Design Information

Optional transverse construction joints are permitted in the footing. Footing joints shall be offset a minimum of 1 ft from the wall joints. Reinforcing steel shall be placed through the footing joints.

A vertical expansion joint shall be provided at intervals not exceeding 90 ft for a conventional retaining wall, as indicated in *LRFD* 11.6.1.6.

410-5.0 RETAINING WALL WITH GROUND REINFORCEMENT, OR FILL WALL

410-5.01 Mechanically-Stabilized-Earth (MSE) Wall

An MSE wall is a cost-effective alternative where a reinforced-concrete or gravity-type wall has traditionally been used to retain earth. This includes a bridge abutment and wingwalls, or an area where the right of way is restricted, such that an embankment of cut backslope with stable side slopes cannot be constructed. It is suited to economical construction in steep-sided terrain, ground subject to slope instability, or an area where foundation soils are poor. An MSE wall is not suitable for some applications as listed in the AASHTO *LRFD Bridge Design Specifications*.

Some additional uses of an MSE wall include the following:

1. a temporary structure which has been cost-effective for a detour necessary for a highway reconstruction project; or

2. phased construction.

The relatively small quantities of manufactured materials required, rapid construction, and competition among the developers of different proprietary systems has resulted in a cost reduction relative to traditional types of retaining walls. An MSE wall is likely to be more economical than another wall system for a wall height of about 10 ft or where special foundations are required for a conventional wall.

One advantage of an MSE wall is its flexibility and capability to absorb deformations due to poor subsoil conditions in the foundations. Also, based on observations in seismically-active zones, this type of structure has demonstrated a higher resistance to seismic loading than a cast-in-place concrete structure.

Precast-concrete facing elements can be made with various shapes and textures, with little extra cost, for aesthetic considerations. Masonry units, timber, and gabions can also be used with advantage to blend into the environment.

410-5.01(01) Advantages and Disadvantages

1. Advantages.

   a. uses simple and rapid construction procedures and does not require large construction equipment;

   b. does not require experienced craftsmen with special skills for construction;

   c. requires less site preparation than another alternative;

   d. requires less space in front of the structure for construction operations;

   e. reduces right of way acquisition;

   f. does not require rigid, unyielding foundation support because an MSE structure is tolerant to deformations;

   g. it is s cost-effective; and

   h. it is technically feasible to a height in excess of 80 ft.

2. Disadvantages.

a. requires a relatively large space behind the wall or outward face to obtain enough wall width for internal and external stability;

b. requires select granular fill. At a site where there is a lack of granular soils, the cost of importing suitable fill material can render the system uneconomical;

c. suitable design criteria are required to address corrosion of steel reinforcement elements and deterioration of certain types of exposed facing elements, such as geosynthetics, to ultraviolet rays and potential degradation of polymer reinforcement in the ground; and

d. the design can require a shared design responsibility between material suppliers and the owner, and greater input from geotechnical specialists in a domain often dominated by structural engineers.

410-5.01(02) Constraints and Conditions

The primary environmental condition affecting reinforcement type selection and potential performance of an earth-retaining structure with reinforced backfill is the aggressiveness of the backfill material that can cause deterioration to the reinforcement.

The lower limit to height is usually dictated by economy. Where used with a traffic barrier, a low wall on a foundation of less than 10 to 13 ft is often uneconomical, as the cost of the overturning moment leg of the traffic-barrier approaches one-third of the total cost of the MSE structure in place. For a cantilever retaining wall, the barrier is simply an extension of the stem with a smaller impact on overall cost.

The total size of structure, or area of facing elements, has little impact on economy compared with other retaining-wall types. However, the unit cost for an MSE wall of less than 3000 ft^2 is likely to be 10 to 15% higher.

410-5.01(03) Relative Costs

Site-specific costs of an MSE wall are a function of factors including cut-fill requirements, wall size and type, in-situ soil type, available backfill materials, facing finish, or temporary or permanent application. An MSE wall with a precast-concrete facing is usually less expensive than a reinforced-concrete retaining wall for a height of greater than about 10 ft and average

foundation conditions. A modular-block wall is competitive with a concrete retaining wall at a height of less than 15 ft.

410-5.01(04) Description of MSE-Wall System

1. Systems Differentiation. Since the expiration of the fundamental process and concrete-facing-panels patents obtained by the system's first proprietary manufacturing company, the engineering community has adopted the generic term mechanically-stabilized-earth to describe this type of retaining wall construction.

   A system for an MSE-wall structure is defined as a complete supplied package that includes design, specifications, and all prefabricated materials of construction necessary for the complete construction of a soil-reinforced structure. Technical assistance during the planning and construction phase is also included.

2. Ground Reinforcement. An MSE-wall system can be described from the reinforcement geometry, stress transfer mechanism, reinforcement material, and the type of facing and connections.

   a. Reinforcement Geometry. The types of reinforcement geometry that can be considered are as follows.

      (1) Linear Unidirectional. These include strips, including smooth or ribbed steel strips.

      (2) Composite Unidirectional. These include grids or bar mats characterized by grid spacing greater than 6 in.

      (3) Planar Bidirectional. These consist of continuous sheets of welded wire reinforcement, or woven wire mesh. The reinforcement or mesh is characterized by means of element spacing of less than 6 in.

   b. Reinforcement Material. Reinforcement material consists of metallic reinforcements, typically of mild steel. The steel is galvanized or epoxy coated. Where non-metallic reinforcement material must be used, it shall be inextensible, and it must be approved by INDOT.

   c. Reinforcement Extensibility. The classes of extensibility are as follows.

(1) Inextensible. The deformation of the reinforcement at failure is much less than the deformability of the soil. INDOT permits only inextensible reinforcement in an MSE-wall system.

(2) Extensible. The deformation of the reinforcement at failure is comparable to or greater than the deformability of the soil.

3. Facing Systems. The types of facing elements used in MSE systems control their aesthetics because they are the only visible parts of the completed structure. A wide range of finishes and colors can be provided in the facing. The facing provides protection against backfill sloughing and erosion, and can provide a drainage path. The type of facing influences settlement tolerances. The facing types are as follows.

a. Segmental Precast-Concrete Panels. These have a minimum thickness of 5½ in., and are of cruciform, square, rectangular, diamond, or hexagonal geometry. Temperature and tensile reinforcement are required, but will vary with the size of the panel. Vertically-adjacent units are connected with shear pins.

b. Welded-Wire Grids. Wire grid can be bent up at the front of the wall to form the wall face. This type of facing is used mainly for a temporary structure.

c. Gabions. Gabions, or rock-filled wire baskets, can be used as facing with reinforcing elements consisting of welded wire reinforcement, welded bar-mats, geogrids, geotextiles, or the double-twisted woven mesh placed between or connected to the gabion baskets.

d. Post-Construction Facing. For a wrapped faced wall, the facing, whether geogrid, geotextiles, or wire reinforcement, can be attached after construction of the wall by means of shotcreting, or placing cast-in-place concrete or other materials. This approach adds cost but is advantageous where significant settlement is anticipated.

Facings using welded wire or gabions have the disadvantages of uneven surface, exposed backfill materials, more tendency for erosion of the retained soil, possible shorter life from corrosion of the wires, and more susceptibility to vandalism. These disadvantages can, be countered by providing shotcrete or by hanging facing panels on the exposed face and compensating for possible corrosion. The advantages of such facings are low cost, ease of installation, design flexibility, positive drainage depending on the type of backfill that provides increased stability, and possible treatment of the face for vegetative and other architectural effects. The facing can be adapted and blended with a natural country

environment. The facings, and geosynthetic-wrapped facings, are advantageous for construction of a temporary or other structure with a short-term design life.

4. Reinforced-Backfill Material. An MSE wall requires structure backfill for durability, positive drainage, constructability, and soil-reinforcement interaction which can be obtained from structure backfill.

5. Miscellaneous Construction Materials. A wall with precast-concrete panels requires bearing pads in the horizontal joints that provide some compressibility and movement between panels and precludes concrete-to-concrete contact. Such materials shall be in concordance with the INDOT *Standard Specifications*.

   All joints shall be covered with a polypropylene geotextile strip to prevent the migration of fine aggregates from the backfill.

410-5.01(05) Selection Criteria

Each topic described below shall be considered at the preliminary design stage. The appropriate elements and performance criteria shall be determined. The process consists of the successive steps as follows.

1. Consider all possible alternatives, and choose an earth-retaining system. Cantilever, gravity, semigravity, or counterforted concrete wall, or reinforced-soil slopes are the usual alternatives to an MSE wall and abutments.

2. In a cut situation, an in-situ wall such as a tieback anchored wall, soil-nailed wall, or nongravity cantilevered wall is often more economical. Where limited right of way is available, a combination of a temporary in-situ wall at the back end of the reinforcement and a permanent MSE wall is often competitive.

3. Consider facing options. The development of project-specific aesthetic criteria is principally focused on the type, size, and texture of the facing, which is the only visible feature of an MSE structure.

4. For a permanent application, an MSE wall with precast-concrete panels shall be considered. It is constructed with a vertical face. The precast-concrete panels can be manufactured with a variety of surface textures, colors, and geometrics.

5. At a more remote location, a gabion, timber faced, or vegetated MSE wall may be considered.

6. For a temporary wall, significant economy can be achieved with wire facings, geosynthetic wrapped facings, or wood-board facing. It can be made permanent by applying shotcrete or cast-in-place concrete in a post-construction application, provided that the wall design satisfies the criteria for a permanent wall.

7. Develop performance criteria for loads, design height, embedment, settlement tolerances, foundation capacity, effect on adjoining structures, etc. Performance criteria for an MSE structure with respect to design requirements are governed by design practice or the *LRFD Bridge Design Specifications* and the INDOT *Standard Specifications*.

8. Consider site effects on corrosion or degradation of reinforcement.

9. Consider site effects with regard to river banks or a floodplain area.

    a. River Banks or Floodplain Area. The top of the leveling pad shall be at least 1 ft above the ordinary high-water elevation. No. 8 stone shall be placed behind the wall instead of structure backfill up to the Q_{100} high-water elevation.

    b. Wall Embedment. The minimum embedment depth to the top of the leveling pad shall be 3 ft, except for a structure founded on rock at the surface, where no embedment is required. A minimum horizontal bench width of 4 ft shall be provided in front of a wall founded on slopes. For a wall constructed along a river or stream where the depth of scour has been reliably determined, a minimum embedment of 2 ft below the Q_{500} scour depth is recommended.

410-5.01(06) Design Criteria

The recommend minimum resistance strengths with respect to failure modes are as follows.

1. External Stability. Sliding eccentricity, *e*, at base, plus bearing capacity, deep-seated stability, and seismic stability shall be checked based on *LRFD* 11.10.5.

2. Internal Stability. Pullout resistance shall be checked based on *LRFD* 11.10.6.

    a. Design Limits and Wall Height. The length and height required to satisfy the project's geometric requirements shall be established to determine the type of structure and external loading configurations.

b. Length of Ground Reinforcement. The minimum reinforcement length for an MSE wall is the greater of 0.7*H* or 8 ft. A greater length may be required for a structure subject to surcharge loads, or if the factored MSE-wall loads are more than the factored bearing resistance.

c. External Loads. The external loads can be surcharges required by the geometry, adjoining footing loads, line loads from traffic, traffic impact loads, or sound-barrier loads. Traffic live loads and impact loads are applicable where the traffic lane is located horizontally from the face of the wall within a distance of less than one half the wall height.

d. Wall Embedment at End Bent or Longitudinal-Edge Encroachment where Stream Parallels Roadway. The minimum embedment depth to the top of the leveling pad shall be 3 ft. However, for a structure founded on rock at the surface, no embedment is required. A minimum horizontal bench width of 4 ft shall be provided in front of a wall founded on slopes. Typical abutment scour-protection countermeasures will be required in front of the wall.

3. Seismic Activity. Due to an MSE wall's flexibility, it is resistant to dynamic forces developed during a seismic event. See the *LRFD Bridge Design Specifications* for seismic-design considerations.

4. Protection of MSE Wall Against Collision. An MSE-wall bridge abutment placed adjacent to a roadway shall be checked for vehicle-collision forces as described in Section 403-3.07.

410-5.02 Modular-Block Facing Units with Reinforced Backfill

A concrete modular-block retaining wall is a Group 2 system. The maximum height shall be 15 ft, measured from the top of the leveling pad to the top of the wall. See Figure 410-5A for a modular-block-wall typical section.

A concrete modular-block retaining wall is constructed from blocks which are available in a variety of facial textures and colors, providing a variety of aesthetic appearances. See Figure 410-5B, Types of Modular Blocks. They range in facial area from 0.5 to 1 ft^2. An integral feature of the facing is a front batter ranging from nominal to 15 deg. The shape of the blocks permits the wall to be built along a curve, either concave or convex. The blocks are dry-stacked, therefore mortar or grout is not used to bond the units together, except for the top two layers.

410-5.02(01) Design Procedure

1. Earth-Pressure Considerations. The backslope is either horizontal such that $B = 0$ deg, or with sloping backfill such that $B > 0$ deg. The modular-block wall can be vertical such that A = 0 deg, or with setback such that $A > 0$ deg.

   The angles A and B are shown in Figure 410-5C or 410-5D.

   For a wall with a setback of 0 deg, the active earth pressure coefficient for external stability, K_a, can be determined from Equation 410-5.1, Rankine's formula.

$$Ka = (\cos B)\frac{\cos(B - X)}{\cos(B + X)} \qquad \text{(Equation 410.5-1)}$$

   where $X = \sqrt{\cos^2 B - \cos^2 \phi_r}$

   For a wall with a setback of 1 deg, K_a can be determined from Equation 410-5.2, Coulomb's formula, with $\delta = 0$.

$$K_a = \frac{\cos^2(\phi_r + A)}{\cos^2 A[\cos(A - \delta)]\left(1 + \sqrt{Z/Y}\right)^2} \qquad \text{(Equation 410-5.2)}$$

   where φ_r = angle of internal friction of the retained soil (from geotechnical report)
   A = wall setback angle from vertical
   δ = interface friction angle between reinforced soil zone and retained soil, which shall be taken as 0 deg
   B = backslope angle (see Figure 410-5C or 410-5D)
   $Z = \sin(\phi_r + \delta)\sin(\varphi_r - B)$
   $Y = \cos(A - \delta)\cos(A + B)$

2. External Stability.

   a. Analysis of Overturning. Eccentricity, e, at the base shall be checked based on *LRFD* 11.10.5.

   b. Analysis of Sliding. Sliding at the base shall be checked based on *LRFD* 11.10.5. Sliding shall also be checked at the level of the first geogrid from the bottom using the geogrid coefficient of direct sliding, but including the shear strength

between modular-block units. If the geogrid coefficient of direct sliding is unknown, use 0.65 tan *S*.

c. Analysis of Soil Bearing Pressure. The bearing pressure at the bottom of the reinforced-soil mass and blocks, BP, is determined by using the Meyerhof stress distribution.

$$BP = \frac{R}{L_2 - 2e} \qquad \text{(Equation 410-5.3)}$$

where *e* is determined by taking moments about the center of the base length L2.

$$e = 0.5hH_1 \cos C + 0.33hH_2 \cos C - 0.5H_1 \sin C(L_2 + h \tan A) - H_2 \sin C -$$
$$0.5V_1(h + H)\tan A - 0.5V_1W_W - V_2(H \tan A + 0.67L + W_W - 0.5L_2) - \frac{2R}{V_3 H \tan A}$$

BP ≤ Factored bearing resistance

The factored bearing resistance is provided by the Office of Geotechnical Services.

If a break in the slope behind the wall is located horizontally within a distance of 2*H*, broken-back backfill may be used. If the break is located at 2*H* or greater from the wall, a horizontal backslope shall be used.

The only difference between broken-back backfill and horizontal backslope is the magnitude of forces H_1 and H_2. The magnitude of these forces is a function of K_a, which is shown at the beginning of the design procedure. Both procedures use this formula for K_a. However, for broken-back backfill, angle *I* shall be substituted for angle *B*. Where the break in the slope behind the wall is located 0.5*H* from the back face of the reinforced soil mass, live load surcharge, Sur, shall be considered in the design. If the break is located at 0.5*H* or greater from the back face of the reinforced soil mass, Sur shall not be considered in the design.

The failure plane for a modular-block wall with geogrid, or extensible, reinforcement is defined as a straight line passing through the heel on the retained-earth side of the lowermost bock at an angle ά from the horizontal. The angle ά is calculated from Equation 410-5.4.

$$\tan(\alpha - \phi) = \frac{\{x(x + y)[1 + y \tan(\delta - A)]\}}{(x + y)[1 + \tan(\delta - A)]} \qquad \text{(Equation 410-5.4)}$$

where

$X = \tan(\phi_i - B)$

$Y = \cot(\phi_i + A)$

φ_i = angle of internal friction of reinforced infill soil

δ = angle of friction at back of wall, assume 2/3 φ_i

See Figures 410-5E and 410-5F for definitions of *A*, *B*, and ά.

The failure plane for broken-back backfill and horizontal backslope with extensible reinforcement is based on angle ά as shown above.

The horizontal stress, σ_h, at each reinforcement level for extensible reinforcement can be computed by multiplying the vertical stress, σv, at that level, by the active earth pressure coefficient K_a.

$$K_a = \frac{\cos^2(\phi_i + A)}{\cos^2 A \cos(A - \delta)\left(1 + \sqrt{Z/Y}\right)^2} \qquad \text{(Equation 410-5.5)}$$

where

$Z = \sin(\phi_i + \delta)\sin(\phi_i - B)$

$Y = \cos(A - \delta)\cos(A + B)$

φ_i = peak angle of internal friction of the reinforced soil zone, or 34 deg

δ = interface friction angle which is assumed to be two-thirds of the angle of internal friction of the reinforced infill soil, or 22.7 deg

The vertical stress, σ_v, is based on the vertical loads being distributed over a length determined by the Meyerhoff formula. The same procedure shall be applied to calculate the maximum bearing pressure at the bottom of the reinforced-soil mass shown in the external-stability equations. The same equations can be used, except *h* and *H* shall be decreased by the distance from the top of the leveling pad to the level of the extensible reinforcement where vertical earth pressures are being calculated. If this procedure results in *R* appearing to the right of center of L_2 (see Figure 410-5D), then calculate σ_v based on the height of overburden plus surcharge at the center of the contributing area, L_a, for the geosynthetic reinforcement being considered. The values of δ_h and L_a are shown in Figure 410-5F.

3. Internal Stability.

a. Soil-Reinforcement Forces. For both extensible and inextensible reinforcements, the surcharge shall be included for stress calculations. The force in the soil reinforcement is determined at the location of the failure plane as follows:

$$R\,e = 0.5ZH_1 \cos C + 0.33ZH_2 \cos C - H_1 \sin C\left[0.5L_2 + \left(H - 0.5Z\right)\right]\tan A -$$
$$H_2 \sin C\left[0.5L_2 + \left(H - 0.67Z\right)\right]\tan A - V_1\left(0.5L_2 + H \tan A - 0.5L\right) - V_2\left(H - 0.5Z\right)\tan A$$

(Equation 410-5.6)

where:

$V_3 = 0.5LW_iH$

$H_1 = ZSurK_aW_r$

δ = external friction angle, the lesser of φ_i or φ_r

φ_i = internal friction angle of reinforced infill soil

φ_r = internal friction angle of retained soil

$C = \delta - A$ [C cannot exceed B.]

$H_2 = 0.5ZK_aW_r$

K_a (see Equation 410-5.5)

W_r = unit weight of retained soil

L = length of soil reinforcement

$V_1 = LSurW_i$

$V_2 = ZLW_i$

W_i = Unit weight of reinforced infill soil

$$\sigma_v = \frac{R}{L - 2e}$$

(Equation 410-5.7)

If an alternate method is required to calculate φ_v,

$$\sigma_v = W_i\left(d + Sur\right)$$

(Equation 410-5.8)

where d and its location are shown in Figure 68-5F.

For extensible reinforcement, $\sigma_h = \sigma_v K_a$, where K_a is based on Equation 68-5.4.

For extensible reinforcement, $\sigma_h = \sigma_v K_a$.

Multiplying σ_h by its contributing area will provide the force in the soil reinforcement, F_g. This is the force in the reinforcement at the failure plane. Because geogrid reinforcement is continuous, the contributing area is the vertical spacing, and the resulting force is on a per-foot basis.

The vertical forces V_1, V_2, and V_3, and horizontal forces H_1 and H_2 shall be determined using calculations accompanying the stability check. However, V_3,

H_1, and H_2 are based on the soil plane above the reinforcement. The procedure outlined above shall be followed to find the force in the soil reinforcement.

The forces in the geogrid at the back face of the blocks and at the failure plane are assumed to be equal at the bottom of the wall. They vary linearly to a point at one-half the wall height where the force is equal to 85% of the force at the failure plane. For the upper half of the wall, the force at the back face of the blocks is assumed to equal 85% of the force at the failure plane.

The force F in the geogrid is equal to σ_h times the contributing area. Since geogrid reinforcement is continuous, the contributing height is used.

The connection strength between the geogrid and the blocks shall be determined from National Concrete Masonry Association Test Method SRWU-1. The service-state-condition strength shall be based on a deformation of the geogrid relative to the block, measured at the face of the blocks, or ½ in. The connection strength used for design shall be the lesser of the peak-connection strength or the service-state-connection strength.

$$\frac{Connection\ Strength}{F} \geq 1.5$$

The allowable force, F, in the geogrid reinforcement shall be in accordance with the AASHTO *LRFD Bridge Design Specifications*. The values of Limit State tensile load, T_1, and serviceability state tensile load, T_w, as described in the AASHTO *LRFD Bridge Design Specifications*, shall be determined.

A factor of safety or reduction factor for extensible reinforcement with respect to environmental and aging losses, FD, and a factor of safety or reduction factor for extensible reinforcement with respect to construction damage, FC, are required. If project-specific test results are available, FD shall be taken as 2.0. If tests are not available, FD shall be taken as 1.1 minimum. If project-specific test results are available, FC shall be taken as 3.0. If tests are not available, FC shall be taken as 1.3 minimum. An overall factor of safety, FS, shall be taken as 1.78.

b. Pullout Capacity of Extensible Reinforcement. The pullout capacity is developed by extending the geogrid beyond the failure plane for a sufficient distance to develop a force F_U, equal to $1.5F$. The minimum length of soil reinforcement is $0.7H$, 6 ft, or the distance to the failure plane plus 3 ft, whichever is greater. F_U shall be calculated as follows:

$$F_U = 2\sigma_v L_A f_d \tan\phi_i \qquad \text{(Equation 410-5.9)}$$

where:
σ_v = vertical stress, or 120δ as shown in Figure 410-5E
L_A = length of reinforcement beyond the failure plane
f_d = equivalent coefficient of direct sliding derived from pullout tests
φ_i = angle of internal friction of the reinforced-soil zone, or 34 deg

Geogrid pullout can occur as a result of a combination of soil shearing on plane surfaces parallel to the direction of geogrid movement and soil bearing on transverse geogrid surfaces perpendicular to the direction of geogrid movement. Ultimate pullout capacity shall be based on a maximum elongation of the embedded geogrid of ½ in., measured at the leading edge of the compressive zone within the soil mass.

4. Pay-Quantities Determination. The surface area of modular-block units and wall erection to be shown on the plans is based on the neat-line limits of the wall-system envelope. The neat-line limits shall be considered as the vertical distance from the top of the leveling pad to the top of the modular-block units, and the horizontal distance from the beginning to the end of the leveling pad.

410-5.02(02) Summary of Design Requirements

1. Blocks Data.

   a. A block shall consist of one piece.
   b. Minimum thickness of front face = 4 in.
   c. Minimum thickness of internal cavity walls other than front face = 2 in.
   d. f_c' = 5000 psi

2. Traffic Surcharge. Live load surcharge = 2 ft = 1.7 psi

3. Retained Soil.

   a. Unit weight = 120 lb/ft^3
   b. Angle of internal friction, φ_i, shall be determined from test information shown in the geotechnical report.

4. Design Life. Design life shall be 75 years minimum.

5. Soil-Pressure Theory. Either Coulomb's or Rankine's theory shall be used at the designer's discretion.

6. Soil Reinforcement.

   a. Shall be either inextensible or extensible.
   b. Minimum length shall be 70% of the wall height, and not less than 6 ft.
   c. Length shall be equal throughout the wall height.
   d. Maximum vertical spacing between layers = 2 ft.
   e. Shall extend a minimum of 3 ft beyond the failure plane.

410-5.03 Modular-Block Gravity Wall without Ground Reinforcement

The proprietary modular blocks used in combination with ground reinforcement can also be used as a pure gravity wall (see Section 410-4.02). The height to which it can be constructed is a function of the width of the blocks, the setback of the blocks, the backslope angle, and the angles of internal friction of the retained earth behind the wall. The base of the block wall shall be placed at least 3 ft below the finish-grade elevation. A wall of this type is limited to a height of 5 ft or less, and is limited to a maximum differential settlement of 1 in 200. However, a wall of this type shall not be used to support a highway or other structure.

Dry-cast modular-block wall units are relatively small, squat concrete units that have been designed and manufactured for retaining-wall application. The weight of a unit ranges from 30 to 100 lb, with units of 60 to 100 lb used for highway work. Unit height ranges from 4 to 8 in. Exposed-face length varies from 8 to 18 in. Nominal width, or dimension perpendicular to the wall face, of a unit ranges between 9 and 24 in. Units are manufactured solid or with cores. Full-height cores are filled with aggregate during erection. Units are dry-stacked without mortar in a running-bond configuration. Vertical adjacent units are interconnected to prevent sliding.

The material specifications for the blocks used for a gravity wall are identical to those for the blocks used for a modular-block wall with ground reinforcement.

The design of a modular-block gravity wall shall be in accordance with the project requirements and the procedures described herein.

The modular-block manufacturer shall check the wall for overturning and internal stability and make certain that the factored bearing-resistance requirements are satisfied. The Office of Geotechnical Services will check the wall for sliding, global stability, and settlement, and will

provide the factored bearing resistance and the equivalent fluid pressure acting on the back of the wall.

The pay quantities shall be determined as described in Section 410-5.02(01) item 4.

410-5.03(01) Design Procedure

In designing a modular-block gravity wall without setback, the active-earth-pressure coefficient, K_a, can be determined from the Rankine formula.

In designing a modular-block gravity wall with setback, the active-earth-pressure coefficient, K_a, can be determined from the Coulomb formula. The interface friction angle between the blocks and soil behind the blocks shall be assumed to be zero.

The forces acting on a modular-block gravity wall are shown in Figure 410-5G, Modular-Block Gravity-Wall Analysis. The unit weight of the block shall be taken as 140 lb/ft^3. The unit weight of the drainage aggregate inside or between the blocks shall be taken as 120 lb/ft^3. Passive soil pressure is not permitted to resist sliding. Sheer between the blocks shall be resisted by friction, keys, or pins.

410-5.03(02) Design Considerations

1. Overturning. For overturning, moments are taken about the outside corner of the block. The vertical components of the soil pressure forces can be conservatively ignored.

2. Sliding. Sliding resistance is similar to that for a modular-block gravity wall with ground reinforcement, except that ground reinforcement is not provided for this type of wall.

3. Bearing Pressure. The maximum factored bearing pressure at the bottom of the lower block shall be less than or equal to the factored bearing resistance which is provided in the geotechnical report.

410-6.0 PREFABRICATED MODULAR GRAVITY WALL, OR CUT WALL

410-6.01 General

The design of a prefabricated modular gravity wall shall be in accordance with the AASHTO *LRFD Bridge Design Specifications*. The requirements of *LRFD* 11.11 will apply.

The use of this type of wall shall be coordinated with the Office of Materials Management. This type of wall consists of proprietary modular structural elements and the fill material within these elements.

The approved prefabricated modular gravity wall types are as follows:

1. prefabricated concrete modular gravity wall, bin type, without ground reinforcement;

2. metal binwall; and

3. gabion wall.

410-6.02 Advantages and Limitations

A modular gravity wall may be used where a conventional cast-in-place gravity, cantilever, or counterfort concrete retaining wall will be considered. In addition to the cost comparison, the advantages and limitations in selecting a prefabricated modular gravity wall shall be investigated as an earth-retaining system.

410-6.02(01) Advantages

The advantages are as follows:

1. low construction cost;
2. fast and easy construction;
3. no temperature effect on the erection;
4. flexibility and tolerance to differential settlement; and
5. units can be economically disassembled and re-used.

410-6.02(02) Limitations

The limitations are as follows.

1. It shall not be used with a radius of less than 800 ft, unless the curve can be substituted with a series of chords.
2. A steel modular systems shall not be used where the groundwater or surface runoff is acid-contaminated, or where deicing spray is anticipated.
3. Available systems are proprietary.
4. Limited to a bottom-up construction method.
5. Corrosion of exposed metallic bins, and wires used in gabion walls, is possible.
6. Storage space is required at the site for relatively large prefabricated units.
7. Possible unavailability of required fill material, especially for a gabion wall.
8. Some systems are susceptible to vandalism.
9. Not suitable for use with a deep foundation.

410-6.03 Drainage

Measures shall be taken to drain the material within and behind the modules or bins using underdrain pipe. The pipe shall be wrapped in a geotextile fabric.

410-6.04 Design Considerations

The design shall be in accordance with the *LRFD Bridge Design Specifications*. Similar to a conventional retaining wall, a prefabricated modular gravity wall shall be evaluated for sliding, overturning due to limiting eccentricity, and bearing resistance at the Strength Limit state. Wall settlement shall be evaluated at the Service Limit state.

410-6.04(01) Load Factors and Load Combinations

Load factors and load combinations shall be as specified in *LRFD* Tables 3.4.1-1 and 3.4.1-2. Maximum and minimum load factors as specified in *LRFD* Table 3.4.1-2 shall be considered in performing a stability analysis. All applicable load combinations shall be investigated.

410-6.04(02) Resistance Factors

In conducting a wall-stability analysis, resistance factors for sliding and bearing resistance shall be as specified in *LRFD* 10.5. In conducting the structural design for the modular-structural-wall elements, resistance factors shall be as described in *LRFD* Section 5 for concrete members, or Section 6 for steel members.

410-6.04(03) Lateral Earth Pressures

The magnitude of active earth pressure and the location of resultant loads shall be as shown in *LRFD* Figures 3.11.5.9.-1 and 3.11.5.9-2. Where the back face of the modules forms an irregular shape, or stepped surface, the earth pressure shall be computed on a plane surface drawn from the upper back corner to the lower back corner of the wall. For stability analysis of sliding and overturning, the system shall be assumed to act as a rigid body. Passive earth pressure shall be neglected in stability calculations, unless the base of the wall extends below the depth of maximum scour, freeze-thaw, or other disturbance. Lateral earth pressures due to live-load surcharge and earth-loading surcharge shall be investigated. Appropriate live-load surcharge as specified *LRFD* 3.11.6.4 shall be considered where applicable. Rankine's theory or Coulomb's theory shall be used at the discretion of the designer.

The angle of friction, δ, between the back of the modules and backfill is stated in *LRFD* for three possible situations. For friction-angle selection, see *LRFD* Table C3.11.5.9-1. This angle affects the magnitude and direction of the resulting lateral earth-pressure force. In performing an external analysis of the system, only the forces acting on or inside the pressure plane may be utilized.

410-6.04(04) Sliding Resistance

Resistance to sliding is provided by infill to the foundation-material interface friction at the base of the module. In performing sliding analysis, the following shall be considered.

1. Sliding shall be evaluated at the Strength Limit state.

2. The requirements of *LRFD* 10.6.3 and 11.11.4.2 will apply.

3. Calculation methods are similar to those for a cast-in-place concrete wall.

4. Load factors shall be as shown in *LRFD* Figure C11.5.5-2.

5. Passive resistance on the front of the wall due to wall embedment is most-often neglected.

6. The coefficient of sliding friction between the infill and foundation material at the wall base shall be the lesser of the friction angle of the infill and the friction angle of the foundation soil.

7. For granular soil, a friction angle of 30 deg maximum shall be used.

For a precast-concrete modular binwall with footings, 80% of the weight of the soil in the modules is transferred to the footing supports, with the remaining soil weight being transferred to the area of the wall between the footings.

410-6.04(05) Limiting Eccentricity Due to Overturning [Rev. Oct. 2012]

Resistance to limiting eccentricity due to overturning is provided by the infill within the module. In performing a sliding analysis, the following shall be considered.

1. Eccentricity shall be evaluated at the Strength Limit state.

2. The requirements of *LRFD* 10.6.3 and 11.11.4.4 will apply.

3. Calculation methods are similar to those for a cast-in-place concrete wall.

4. Load factors shall be as shown in *LRFD* Figure C11.5.6-2.

5. The location of the resultant of the reaction forces shall be within the middle two-thirds of the base width.

6. Passive resistance on front of the wall due to wall embedment is most-often neglected.

7. Unless a structural bottom is provided to retain the soil within the module, a maximum of 80% of the soil fill for a precast-concrete modular binwall, or a metal binwall within the modules, is effective in resisting overturning moments.

410-6.04(06) Bearing Resistance

In performing bearing-pressure analysis, the following shall be considered.

1. Bearing-resistance analysis shall be evaluated at the Strength Limit state.

2. The requirements of *LRFD* 10.6.3 and 11.11.4.3 will apply.

3. Calculation methods are similar to those for a cast-in-place concrete wall.

4. Load factors shall be as shown on *LRFD* Figure C11.5.5-1.

5. If a footing is provided at the rear and at the front of a precast-concrete modular binwall, the dead loads and earth-pressure loads are transferred to these point supports per unit length of the wall. A minimum of 80% of the soil weight inside the modules shall be considered to be transferred to the front and rear support points. If a foundation is provided under the total area of the module, all soil weight shall be considered.

410-6.04(07) Structural Design

In performing structural design or selecting a structural wall system, the following shall be considered.

1. Structural design shall be performed at the Strength Limit state.

2. The requirements of *LRFD* 11.11.5.1 will apply.

3. The structural demand, including compression, shear, bending stresses, etc., of the wall elements shall be compared to the manufacturer's recommended structural capacity.

4. Prefabricated modular units shall be designed for the difference between the factored earth pressure behind the wall and the factored pressures developed inside the modules.

5. During construction, the rear face of the wall shall be designed for the earth pressure inside the module.

6. For concrete modules, strength and reinforcement requirements shall be in accordance with *LRFD* Section 5.

7. For steel modules, strength requirements shall be in accordance with *LRFD* Section 6.

410-6.04(08) Overall Stability

The overall stability shall be evaluated using limiting-equilibrium methods of slope stability analysis. The following shall be considered.

1. Overall stability shall be investigated at the Service Limit state.
2. The requirements of *LRFD* 11.6.2.3 will apply.
3. Calculation methods are similar to those for a cast-in-place wall.
4. The resistance factors shall be as described in *LRFD* 11.6.2.3.

410-6.04(09) Lateral and Vertical Displacement

The lateral and vertical displacement shall be evaluated at the Service Limit state, and compared with tolerable wall-movement criteria. The tolerable differential movement in terms of a horizontal differential settlement is most often 1/300 along the alignment of the wall. However, for a gabion wall, this is most often 1/50.

410-6.05 Prefabricated Concrete Bin Wall

410-6.05(01) General

A prefabricated concrete modular gravity wall consists of interlocking reinforced precast concrete cells or modules, a cast-in-place concrete floor or dense-graded aggregate base, an optional reinforced-concrete parapet placed on top of the wall or concrete cap, and structural infill inside the modules. The parapet can be placed and held rigidly to a cast-in-place concrete slab.

The height and width shall be as determined based on the site-specific conditions, site constraints, and as required by the design. The proposed length and width of the modules shall be submitted to the Office of Geotechnical Services for review and approval during the design stage.

Foundation preparation shall include removing unsuitable material and vegetation, stabilizing weak or compressible material and replacing it with B borrow, then proof-rolling the foundation area. The wall base shall be constructed using dense-graded crushed aggregate or concrete. The concrete base shall have a 28-days compressive strength of 3,000 psi.

The fill material within and behind the modules shall be structure backfill. A geotextile filter layer shall be placed behind the front vertical joints and behind the modules to prevent migration

of fines and allow passage of water. Drainage details for the wall system shall be shown on the plans.

Polyethylene foam rod and a rubber pads shall be placed in the front horizontal joint.

410-6.05(02) Design Procedure

The design shall be as described in Section 410-6.04. The *LRFD Bridge Design Specifications* permit 80% of the weight of the soil to be effective in resisting limiting eccentricity due to overturning moments. The basis of this practice is empirical and recognizes the fact that some of the soil in the modules is in direct contact with the foundation soil. A value of greater than 80% is permitted if the actual value can be verified from full-scale field tests or if the bins are constructed with structural floors.

Longitudinal differential settlements tolerance along the face of the wall shall result in a slope of less than 1/300. A system can be relatively rigid, and is therefore subject to structural damage due to differential settlements, especially in the longitudinal direction. Therefore, the ultimate bearing capacity for the footing design can be comparable to that for a cast-in-place wall because both are relatively sensitive to differential settlements.

LRFD Equation 11.11.5.1-1 is provided for determining the factored pressure inside the bin module, in addition to other design provisions. A value of 2 T/yd^3 may be used for the soil density.

Sliding and limiting eccentricity due to overturning stability computations shall be made by assuming that the system acts as a rigid body. The lateral earth-pressure force per unit width behind a prefabricated modular binwall shall be taken as specified in *LRFD* 3.11.5.9, and applied at the height and direction specified therein.

Structural design shall be as described in Section 410-6.04(06). For material properties and structural design, *LRFD* Section 5 will apply. The concrete shall have a minimum 28-days compressive strength of 4,000 psi. Reinforcement shall be grade 60 uncoated bars or welded wire fabric.

410-6.06 Metal Binwall

410-6.06(01) General

A prefabricated metal modular binwall system functions as a gravity wall utilizing its own weight and the weight of the soil inside the modules to resist overturning and sliding. It is a proprietary wall system whose design is provided by the wall supplier. A steel modular wall system shall not be used where the groundwater or surface runoff is contaminated with acid or where deicing spray is anticipated.

Foundation preparation shall include removing unsuitable material and vegetation, stabilizing weak or compressible material and replacing it with B borrow, then proofrolling the foundation area. The wall base shall be constructed of dense-graded crushed aggregate.

Bins consist of adjoining closed-face cells filled with structure backfill to form a gravity-type wall. The cells are constructed of lightweight steel members that are bolted together at the site. The steel structure is flexible to allow for minor ground movements. The steel structure consists of S-shaped steel stringers and spacers, vertical connectors, grade plates, and stringer stiffeners.

The wall height ranges from 5 to 35 ft. The base width of a binwall ranges from approximately 40 to 60% of the wall's height, depending on surcharges, backslopes, batter, etc. The base of the binwall shall be placed at least 3 ft below the finish-grade elevation.

The fill for the interior of the bin and behind the wall shall be structure backfill. Drainage details for the wall system shall be shown on the plans.

410-6.06(02) Design Procedure

The design shall be as described in Section 410-6.04. The *LRFD Bridge Design Specifications* permit 80% of the weight of the earth to be effective in resisting overturning moments. The basis of this practice is empirical and recognizes the fact that some of the earth in the modules is in direct contact with the foundation soil. A value of greater than 80% is permitted if the actual value can be verified from full-scale field tests, or if the bins are constructed with floors.

Longitudinal differential settlements along the face of the wall shall result in a slope of less than 1 to 200. A system can be relatively rigid, and is therefore subject to structural damage due to differential settlements, especially in the longitudinal direction. Therefore, the ultimate bearing capacity for footing design can be comparable to that for a cast-in-place wall because both are relatively sensitive to differential settlements.

LRFD Equation 11.11.5.1-1 is provided for determining the factored pressure inside the bin module, in addition to other design provisions. A value of 2 T/yd^3 can be used for the soil density.

Sliding and overturning stability computations shall be made by assuming that the system acts as a rigid body. The lateral earth pressure force per unit width behind the wall shall be taken as specified in *LRFD* 3.11.5.9, and applied at a height and in a direction as specified therein.

Structural design for the metal bins wall shall be as described in Section 410-6.04(07). For material properties and structural design, *LRFD* Section 6 will apply.

The concrete for a precast-concrete modular binwall shall have a minimum 28-days compressive strength of 4000 psi. Reinforcement shall be grade 60 uncoated bars or welded wire reinforcement. Infill soil shall be structure backfill. Drainage details for the wall system shall be shown on the plans.

410-6.07 Gabion Wall

410-6.07(01) Background

A gravity retaining wall can be constructed from rock-filled wire baskets commonly called gabions or gabion baskets. The gabions are manufactured from a heavy wire mesh formed into rectangular baskets. Common basket sizes include a standard depth of 3 ft; heights of 1, 1.5, or 3 ft; and lengths of 3 to 12 ft. Individual baskets are placed on the prepared earth surface, reinforced with internal tie wires, and filled with riprap stone. After the baskets are filled, the lids are closed and wired shut to form a relatively rigid block. Succeeding rows of gabions are laced to the filled underlying gabions and are filled in the same manner until the wall reaches the design height. A proprietary gabion-basket manufacturer will supply details for the wires, lacing, and lid closure. However, the manufacturer does not provide internal or external wall design. External stability considerations are determined by the Office of Geotechnical Services.

Foundation preparation shall include removing unsuitable material and vegetation, stabilizing weak or compressible material and replacing it with B borrow, then proofrolling the foundation area. The wall base shall be constructed of dense-graded crushed aggregate.

A gabion wall can be used for a variety of applications. A wall on a grade can be accommodated by either putting steps in the wall or by sloping the base of the wall. A gabion wall on a grade of 5% or more has a more pleasing appearance if steps are utilized. A gabion wall can be constructed adjacent to a stream or lake so that at least a portion of the wall is below the water line. For this application, it is necessary to dewater the wall site during construction. For an in-

water installation, the wall shall be protected against erosion or scour by the use of riprap or other suitable protection. A gabion wall can also be constructed along a curved alignment. However, a sharp curve with a radius of less than 25 ft can be difficult to construct and shall be avoided. A layer of geotextile fabric shall be placed on the back side of the wall prior to backfilling to prevent soil migration and loss. The minimum embedment for a gabion wall is 1'-6".

The durability of a gabion wall is dependent upon maintaining the integrity of the gabion baskets. Galvanized steel wire is required for all each gabion installation. In an area of high corrosion potential due to soil, water, salt spray, or abrasion conditions, a polyvinyl chloride coating is required in addition to galvanizing. Conditions at each individual site shall be assessed to determine corrosion potential. Although gabions are manufactured from a heavy gage wire, there is a potential for damage due to vandalism. The potential for such vandalism shall be considered at each specific site.

In gabion-wall design, the mass of a wall will increase disproportionately with increases in height;. therefore, doubling the height of a wall will more than double the mass of the wall. The ratio of the base width to height will vary, but this value shall not be below 0.5. In practice, this value will range from 0.5 to 0.75 depending on backslope, surcharge, and angle of internal friction of retained soil. A gabion wall has shown to be economical for a low to moderate height, but is less economical as height increases. A height of about 18 ft shall be considered as a practical limit for a gabion wall.

A gabion wall is tilted back into the slope for design stability. A declination of 6 deg is used, but another angle is acceptable. A geotechnical investigation and analysis is conducted by the Office of Geotechnical Services to determine soil-design parameters for retained and foundation soils. Consolidation potential due to wall loads is considered in determining foundation design parameters.

The rough texture of the gabion baskets provides an attractive surface for climbing vines and plants. Plantings of this type at the base of the wall can provide a more natural appearance within a few growing seasons.

410-6.07(02) Design Procedure

The design of a gabion wall shall be as described in Section 410-6.04. It is not specifically addressed in the *LRFD Bridge Design Specifications*. It shall, however, be designed in accordance with the applicable portions of *LRFD* Article 11.11.

Design of a gabion wall shall consider lateral earth pressure and all surcharges. Resistance to such loads is developed by proportioning the cross-sectional area of the wall to achieve a sufficient mass to ensure stability. The analysis is similar to that for another type of modular gravity wall. Sliding and rotation shall be considered for the full height of the wall and at each gabion layer in the wall.

The factored base pressure of the wall cannot exceed the foundation-soil bearing resistance. Wall-base pressure can be determined by using the Meyerhoff method in which vertical loads are distributed over a base area reduced for eccentricity. This method is shown in Figure 410-6A, Broken-Back Slope, Simplified Example, and Figure 410-6B, Sloping Backfill, Simplified Example. More-precise base pressures can be determined from a static analysis of all forces acting about location of the resultant. Global stability can be determined from conventional soil mechanic methods or programs.

Lateral earth pressures are determined by multiplying vertical loads by the coefficient of active earth pressure, K_a. This value can be determined by either the Rankine method or the Coulomb method at the discretion of the designer.

In addition to the actual weight of the gabions, all earth backfill bearing directly on the gabions shall be included as part of the wall system. Lateral earth pressure shall be assumed to act on a vertical plane rising from the back of the wall base. These conditions are illustrated in Figures 410-6A and 410-6B.

Gabion-wall analysis is simplified by separating the wall into individual sections based on gabion placement. Surcharge loads shall be added in determining driving loads but shall not be included in computing resisting values.

410-6.07(03) Summary of Design Requirements

1. Foundation-Design Parameters. Use values provided by the Office of Geotechnical Services.

2. Traffic Surcharge. Traffic live load surcharge = 2 ft = 240 lb/ft^3

3. Retained Soil.

    a. Unit weight = 120 lb/ft^3
    b. Angle of internal friction as determined from tests made by the Office of Geotechnical Services.

4. Soil-Pressure Theory. Rankine's Theory or Coulomb's Theory shall be used at the discretion of the designer.

410-7.0 SPECIAL EARTH-RETAINING SYSTEMS

410-7.01 Steel-Sheet-Piling Nongravity Cantilever Wall

A steel-sheet-piling wall is used as a temporary wall, but it can also be used in a permanent location. See Figure 410-2C, Cut-Wall System Selection Chart, for characteristics, including advantages and disadvantages, of a sheet-piling wall.

410-7.01(01) Design Procedure

A description of the design of a sheet-piling wall along with some simplified earth-pressure distributions is shown in the *LRFD Bridge Design Specifications*. This type of wall is also referred to as a flexible cantilevered wall. A steel-sheet-pile wall can be designed as a cantilevered wall up to approximately 15 ft height. A steel-sheet-pile wall of greater height can require tiebacks with either prestressed soil anchors or deadman-type anchors. Anchored-wall design and details are discussed in Section 410-7.02. The preferred method of designing cantilever sheet piling is shown in the United States Steel *Sheet Piling Design Manual*, Conventional Method. The Office of Geotechnical Services will provide the soil-design parameters including cohesion values, angle of internal friction, angle of wall friction, soil densities, and water-table elevations.

Areas of permanent steel sheet piling above the ground line shall either be coated or painted prior to driving, or made from weathering steel. Corrosion potential shall be considered in steel-sheet-piling design.

The appearance of a permanent steel-sheet-piling wall can be enhanced by applying either precast-concrete panels or cast-in-place concrete surfacing. Welded stud-shear connectors can be used to attach cast-in-place concrete to a sheet of piling. See Figure 410-7A, Sheet-Piling Wall, Concrete-Facing Detail. Surface finishes obtained by using form liners or other means, and concrete stain or a combination of stain and paint are recommended for the concrete facing.

For information on steel sheet piling required for railroad protection, see Section 17-5.04.

410-7.01(02) Summary of Design Requirements

1. Foundation-Design Parameters. Use values provided by the Office of Geotechnical Services.

2. Traffic Surcharge. Traffic live-load surcharge = 2 ft = 240 lb/ft^3

3. Retained Soil.

   a. Unit weight = 120 lb/ft^3
   b. Angle of international friction as determined from tests from the Office of Geotechnical Services.

4. Steel-Design Properties. Minimum yield strength = 39,000 psi.

410-7.02 Soldier-Pile and Lagging Wall

410-7.02(01) General

Wall elements shall be designed to resist all horizontal and vertical loads in accordance with the *LRFD Bridge Design Specifications*. If anchor inclination is required, the structural analysis of the soldier piles shall consider the interaction effects of combined axial load and flexure in accordance with the *Specifications*.

410-7.02(02) Embedment Depth

For cantilever piles without anchors, the embedment shall be determined to satisfy horizontal force equilibrium and moment equilibrium about the bottoms of the piles.

For piles with anchors, the depth of the embedment is determined by means of moment equilibrium of lateral forces about the lowest anchor level.

The moment resistance of the soldier-pile member shall be neglected at the level of the lowest anchor.

Depth of embedment, *D*, shall also be sufficient to provide necessary vertical capacity or adequate kick-out resistance through development of passive pressure.

410-7.02(03) Design of Timber Lagging

The lagging thickness is determined from past construction experience as related to depth of excavation, soil condition, and soldier-pile spacing. Otherwise, soil-pressure distribution recommended by the Office of Geotechnical Services shall be used to determine the lagging thickness.

410-7.02(04) Design of Fascia Wall

The fascia wall shall be reinforced concrete. It shall be designed in accordance with the *LRFD Bridge Design Specifications*. The minimum structural thickness of fascia wall shall be 9 in. Architectural treatment of facing shall be addressed in the special provisions.

Concrete strength shall not be less than 3000 psi at 28 days. The wall shall extend a minimum of 2 ft below the ground line adjacent to the wall.

Permanent-drainage systems shall be provided to prevent hydrostatic pressures from developing behind the wall. A cut which slopes toward the proposed wall will invariably encounter natural subsurface drainage.

Vertical chimney drains, prefabricated drains, or porous engineering fabrics can be used for normal situations to collect and transport drainage due to a weep hole or pipe located at the base of the wall. Concentrated areas of subsurface drainage can be controlled by means of installing horizontal drains to intercept the flow at a distance well behind the wall.

410-7.02(05) Stage-Construction Check

The earth-pressure distribution for an anchored wall changes during wall installation. The procedure for checking the stability of the wall system for temporary construction loadings shall be the responsibility of the anchored-wall specialty contractor subject to Department approval.

410-7.02(06) Design of Bond Length

The bond length shall not be shown on the plans.

For design purposes, the required bond length shall be approximated with sufficient accuracy so that cost estimates and right of way acquisition can be confidently made.

The bond transfer values for soil grout length, or bond length, shall be verified by means of testing to determine the required bond length.

Other considerations are as follows.

1. A minimum bond length shall be specified. The recommended value is 15 ft in soil, or 10 ft in rock.

2. A bond length exceeding 40 ft in soil or 25 ft in rock does not efficiently increase the anchor capacity.

3. At a site with restricted right of way, the maximum bond length is the distance from the end of unbonded length to within 2 ft of the right-of-way line.

4. To permit high-pressure grouting without damage to existing facilities and to ensure adequate overburden pressure to mobilize the full friction between soil and grout, a 15-ft minimum overburden cover over the bond zone is recommended for anchors of average capacity, i.e., 150 kip or less.

5. Anchors founded in mixed ground condition shall be designed assuming the entire embedment is the weakest deposit.

6. The minimum unbonded length is 15 ft.

410-7.03 Drilled-Shaft Wall

Drilled shafts can be used to stabilize soil slopes. The shafts must be able to withstand the bending stress exerted on them from the unstable mass, and extended a sufficient depth below the critical failure surface in order to develop enough passive resistance to withstand the driving force. Drilled shafts can also be used as an earth-retention wall in different forms. The drilled shafts can touch each other as a tangent-piles wall, they can overlap each other as a secant-piles wall, or they can be spaced with a gap between shafts as an intermittent-pile wall. Drilled shafts increase the stability of slopes and embankments by increasing the shear resistance across the potential failure surface. If the drilled-shaft wall is an intermittent wall, the spacing of the shafts shall be designed so that soil from the unstable mass does not squeeze through the gap between shafts. A design procedure is provided in NHI 132036 *Earth Retaining Structures*, and FHWA IF-99-025 *Drilled Shafts: Construction Procedures and Design Method*.

An unstable slope can be stabilized as shown in Figure 410-7B. Some of the forces from the downward-moving mass are transferred to the upper portion of the drilled shafts, which serves to increase the resisting forces in the soil, with a resulting increase in the factor of safety.

The portion of the drilled shaft below the sliding surface shall be designed to resist the applied forces without excessive deflection or bending moment. Technology is being developed to allow a rational solution for the design of the drilled shafts.

Drilled shafts have some advantages in stabilizing a slope. The drilling of an excavation and the placing of concrete will cause fewer disturbances than driving a pile. Also, a crane-mounted drilling machine can be rigged so that it can sit above the slope and reach 50 ft or more to make the boring.

410-7.04 Anchored Wall

An anchored wall uses vertical members as main load carrying members, such as soldier piles, i.e., rolled steel sections, cylinder piles, sheet piles, or slurry walls to resist forces. The main members are connected to high-strength steel bars or strand anchors, which are fixed into soil or rock with high-strength grout and stressed to counteract the horizontal earth-pressure loads. Figure 410-7C provides an anchored-wall typical section. This type of wall is most practical in a cut section and is best suited for a situation where excavation for a retaining wall with a footing is impractical because of traffic, utilities, existing structures, or right of way restrictions. An advantage in using an anchored wall is that it causes minimal disturbance to the soil behind the wall and structures resting on this soil. Non-stressed anchors, called deadman anchors, rely on passive pressure of the soil in front of the deadman panel to resist horizontal forces. An anchored wall shall be designed by an anchored-wall specialty contractor subject to Department approval.

410-7.04(01) Principles of Anchored-Wall Design

Anchored-wall design includes the following:

1. evaluation of the feasibility of anchors;
2. selection of an anchor system;
3. estimation of anchor capacity;
4. determination of unbonded length, bonded length; and
5. selection of corrosion protection.

The economical use of anchors shall be determined for a particular site based on installation ability and development of anchor capacity. The presence of utilities or other underground facilities can affect whether anchors can be installed.

Anchors can consist of bars, wires, or strands. The choice of appropriate type is usually left to the contractor but may be specified by the designer if site conditions exist which preclude the use of certain anchor types. Strands and wires have advantages with respect to tensile strength, limited work areas, ease of transportation, and storage. Bars are more easily protected against corrosion, and are easier to stress and transfer load.

A reliable estimate of the safe anchor capacity shall be provided by a geotechnical engineer to determine the feasibility of anchoring. The capacity of each anchor shall be verified through testing. Requirements for test methods and frequency are provided in the AASHTO *LRFD Bridge Construction Specifications*. Typical system design values are as follows.

1. Design loads shall range from 60 to 240 kip.

2. The anchor-wall system shall be analyzed to ensure long-term stability. The minimum unbonded length of 15 ft for soil or rock anchors shall be shown on the plans. A longer free length may be required in plastic soil. The designer shall contact the Office of Geotechnical Services.

3. The angle of inclination shall be between 10 deg and 45 deg. A 15-deg angle is preferred to simplify grouting and to minimize vertical forces imposed on the wall by the anchors. A steeper angle of up to 45 deg is recommended only to reach deep bearing strata or avoid existing substructures.

The ultimate anchor transfer load per unit length can be preliminarily estimated using the guidelines shown in the LRFD Bridge Design Specifications for soil or rock. The final anchored-wall design will be the responsibility of the anchored-wall specialty contractor selected for wall construction.

The maximum allowable anchor design load in soil can be determined by multiplying the bonded length by the ultimate transfer load and dividing by a Factor of Safety of 2.5.

The maximum allowable anchor design load in rock can be determined by multiplying the bonded length by the ultimate transfer load and by dividing by a Factor of Safety of 3.0.

410-7.04(02) Earth-Pressure Distribution

For an anchored wall with two or more anchors constructed from the top down, the earth-pressure force resultant per unit width of wall, pounds per inch, can be determined from the *LRFD Bridge Design Specifications*.

The design shall first consider the active earth-pressure coefficient, K_a, unless structures exist within a lateral distance equal to twice the wall height. For this situation, the average earth-pressure coefficient, K, shall be computed as follows:

$$K = K_0 - \left(\frac{x}{2H}\right)(K_0 - K_a)$$

Where: x = Distance from structure to wall, ft
H = Height of wall, ft
K_0 = Coefficient of at-rest earth pressure

K_a permits lower wall-design pressure if small wall displacements can be tolerated, i.e., ground subsidence occurs.

K_0 increases wall-design pressure but limits wall displacement, i.e., ground subsidence is limited.

410-7.04(03) Corrosion Protection

See the AASHTO *LRFD Bridge Design Specifications* for corrosion-protection guidelines. Corrosion-protection requirements for the anchor head, the unbonded length, and the anchor length shall be included in the specifications for the anchored wall.

410-7.04(04) Determination of Anchor Spacing

Suggested temporary test loads are between 75 and 80 percent of Guaranteed Ultimate Tensile Strength (GUTS). Suggested limits for design loads are between 0.5 and 0.6 of GUTS, or typically 53%.

Typical horizontal-pile spacings of 6 to 10 ft and vertical-anchor spacings of 8 to 12 ft are commonly used. The minimum spacing of 4 ft in both directions is not recommended for considering the effectiveness and disturbance of anchors due to installation.

410-7.04(05) Drainage

An anchored wall shall have weepholes of 4 in. diameter, located a minimum of 1 ft above the final ground line and spaced about 10 ft apart.

Drainage panels shall be installed at each weephole and shall extend from the base of the wall to a level that is 1 ft below the top of the wall as described in the *LRFD Bridge Design Specifications*. A drainage panel consists of a strip of prefabricated geocomposite drain material of 2 ft width. Drainage features shall be shown on the plans.

410-7.05 In-Situ-Reinforced Wall

410-7.05(01) Soil-Nailed Wall

A soil-nailed wall is an earth-retaining system consisting of reinforced in-situ material which can be either original ground or an existing embankment. Construction is accomplished by means of excavating from the top of wall elevation down in stages of typical height of 4 to 6 ft. After each stage of excavation, soil-reinforcing elements, or soil nails, generally consisting of reinforcing bars, are placed and grouted into drilled holes which have been drilled at a slight downward inclination from level into the in-situ material. The face of each stage of excavation is protected by a layer of reinforced shotcrete. After the full height of the wall has been excavated and reinforced, a finish layer of concrete facing is placed for the full head of the wall.

Soil nailing is most applicable for retaining excavations and for increasing the stability of slopes.

The designer is responsible for the structural design and preparation of the contract documents. The Office of Geotechnical Services is responsible for the geotechnical design. The geotechnical aspect of the design establishes the soil-nail size, length, spacing, and minimum drilled-hole diameter.

This type of wall shall be considered experimental where the conditions exist as follows:

1. the wall height is greater than 30 ft;
2. the wall is to be built in clay or soils with sufficient clay content such that the soil mass will behave as a clay, based on engineering considerations; and
3. the wall has an unusual surcharge load.

A permanent facing system is required. The permanent face of the wall shall be vertical, although the shotcrete facing of the soil nailed wall may be battered.

Soil nailing has technical and economic advantages over an MSE retaining wall as follows.

1. A soil-nailed wall is constructed incrementally from the top down, which will eliminate the cost of temporary sheeting or shoring systems required for MSE wall excavation.

2. The volume of excavation is significantly reduced as compared to that for an MSE wall.

3. B borrow is not required for a soil-nailed wall.

4. Soil-nailed wall construction and excavation shall proceed significantly faster than MSE-wall construction due to less excavation volume and elimination of shoring.

5. Only light construction equipment and simple grouting equipment are required to install the nails. Grouting of the boreholes is generally accomplished by gravity. This feature is significant for a project site in a traffic congested area.

However, the specific details of the nail length and location shall be developed by the contractor and submitted for review and approval by the Department. The soil parameters for soil-nailed-wall design are listed in Figure 410-7D.

A soil-nailed wall in clay soil requires nail lengths between 0.7 and 1.0 times the wall height, H, with $0.85H$ as a typical ratio. Permanent wall easements may be necessary to accommodate the soil nails.

Ultimate pullout resistance, or friction limit, of each nail is a function of the size and shape of the drill hole, strength characteristics and density of the soil in which it is placed, drilling method, length tested, method to clean the drill hole, and grouting method or pressure used.

The construction of a soil-nailed mass results in a composite coherent mass similar to that of an MSE wall. The locus of maximum tensile forces separates the nailed soil mass into the zones as follows:

1. an active zone, or potential sliding soil wedge, where lateral shear stresses are mobilized and result in an increase of the tension force in the nail; and

2. a resistance, or stable, zone where the generated nail forces are transferred into the ground.

The design of a soil-nailed retaining structure is based on evaluation of the following:

1. global stability of the structure and the surrounding ground with respect to a rotational or translational failure along potential sliding surfaces; and

2. local stability at each level of nails.

A computer program shall be used for soil-nailed-wall analysis. Global-stability analysis consists of evaluating the global stability of the soil-nailed retaining structure and the surrounding ground with respect to a rotational or translational failure along potential sliding surfaces. It requires determination of the critical sliding surface which can be dictated by the satisfaction of the subsurface soil and intensity of surcharge loads, as well as the specific design of the reinforcing elements' spacing, length, and location. Because global stability is a function of the nail length and spacing, it is evaluated as part of the design of the wall, and cannot be evaluated independently of reinforcement spacing, as is typical for an MSE wall.

Requirements for the installation of a prefabricated vertical wall drain shall be included in the contract documents.

A soil-nailed wall shall be designed by a specialty contractor based on its knowledge and experience in the practice of soil-nailed-wall construction.

410-7.05(02) Micropile Wall

1. General. A micropile wall, including a root-pile wall or an insert wall, consists of an array of drilled and grouted micropiles that penetrate below a potential surface of sliding. For this wall system, the micropiles are connected at the ground surface to a reinforced-concrete cap beam. The design of a root-pile wall uses small-diameter piles spaced closely together in a complex three-dimensional network. The purpose of the micropile system is to knit the soil into a coherent mass that behaves as a gravity-retaining structure. The vertical and battered piles of an insert wall are larger in diameter and are spaced farther apart in comparison to a root-pile wall. This wall system provides sliding resistance through tensile and flexural resistance developed in the piles.

   Micropiles are drilled piles of less than 12 in. dia., constructed with steel reinforcement, and bonded to the ground with grout using gravity or pressure-grouting techniques. Micropiles can be used for structural support, slope stabilization, or a retaining system. Information on the design and construction of micropiles for structural support and slope stabilization is provided in Sabatini and Tanyu, 2006.

A micropile wall can be used for temporary shoring or as a permanent earth-retaining system. Micropiles are relatively expensive compared to other forms of deep foundation elements such as driven piles or drilled shafts. Inasmuch as drilled shafts and driven-pile elements are used as vertical wall elements, e.g., a secant-pile wall consi8sts of driven steel soldier piles, the use of micropiles for a wall system will likely be a viable and cost-effective system only where driven piles or drilled shafts cannot be installed.

The principal components of a micropile wall consist of vertical micropile elements installed from the ground surface at or near the final excavated wall-face line, and sub-horizontal elements installed from the ground surface which resembles a ground anchor. Figure 410-7E shows a cross section of a micropile retaining wall. The A-frame system formed by the vertical and sub-horizontal micropiles is structurally connected with a reinforced-concrete grade beam.

The advantages of a micropile wall are as follows.

a. It can be constructed in a remote area or where there is restricted access.

b. It can be installed in difficult and variable ground conditions, e.g., karstic area, uncontrolled fill, cobbles, boulders, etc.

c. Unlike another drilled-shaft system, the construction of micropiles is less affected by soft clays, running sands, or a high groundwater table.

d. Vibration and noise is minimal.

e. No significant spoil is generated during construction of the micropiles.

f. Due to high tension and compression capacities of micropiles, a relatively tight frame configuration can be used allowing for construction under limited right-of-way constraints.

The limitations of a micropile wall are as follows.

a. An underground easement is required for installation.

b. Vertical micropiles have limited lateral capacity.

c. Micropiles may not be suitable where liquefaction can occur due to concerns of buckling resulting from loss of lateral support, though this effect can be evaluated.

d. Design methods are not well developed primarily due to limited performance data for wall applications.

2. Construction Materials and Methods. A micropile retaining wall is constructed from the top-down and follows this sequence.

a. At the ground surface, an area is excavated that is wide and deep enough to accommodate the cap beam.

b. The formwork is installed for the cap beam and the cap-beam steel reinforcement is placed.

c. The corrugated plastic sleeves are placed for installation of the micropiles through the cap beam.

d. The concrete cap is poured.

e. Micropiles are installed through the plastic sleeves.

f. Excavation, application of temporary shotcrete facing, and installation of geocomposite drains and other drainage systems are made until final excavation grade is reached.

g. The cast-in-place wall facing is installed, if required.

Excavation in front of the wall is performed in lifts of typically not more than 6 ft. During excavation, shotcrete is applied to the excavation face to temporarily prevent raveling of the soil face. Connection to the micropiles is performed via head studs that are welded to the front-line micropiles. Following completion of the excavation, a leveling pad is poured to allow erection of one-sided forms. Once the leveling pad is completed, the wall face is constructed from CIP concrete. Headed studs welded to the micropiles are embedded in the CIP grade beam and wall face to provide connection of the micropile structure to the CIP wall face.

The typical construction sequence for simple gravity-grouted and pressure-grouted micropiles includes drilling the pile shaft to the required tip elevation, placing the steel reinforcement, placing the initial grout with a tremie, and placing additional grout under pressure as applicable. The drilling and grouting equipment and techniques used for the micropile construction are similar to those used for the installation of soil nails or ground anchors.

3. Typical Micropile Construction Sequence Using Casing. The amount of steel reinforcement placed in a micropile is determined based on the loading it supports and stiffness required to limit elastic displacements. Reinforcement can consist of a single reinforcing bar, a group of reinforcing bars, a steel pipe casing, or rolled structural steel. Reinforcement can be placed either prior to grouting, or placed into the grout-filled borehole before the temporary casing, if used, is withdrawn.

4. Micropile-Wall Design. There is no generally-accepted procedure available for the design of this system. It can be analyzed using soil-structure interaction analyses in which the axial stiffness and bending stiffness of the vertical and battered micropiles are explicitly modeled. All stages of excavation in front of the wall can be modeled. With this approach, other potential failure mechanisms shall be considered separately, including the potential for soil to squeeze in between the small-diameter micropiles and the potential for structural failure of the vertical micropiles due to buckling. Buckling is checked since the relatively small-diameter vertical micropiles will experience compressive loads as they are close to the exposed ground surface.

   The design approach is described as follows.

   a. The micropiles section is assumed, and the ultimate bending capacity of the micropile sections shall be calculated. The flexural rigidity, E_I, of the micropiles shall be calculated. These values can later be used in numerical analyses. Micropiles that consist of a centralized reinforcing bar in a drilled and grouted hole can be analyzed using LPILE's ultimate bending-analysis module. The tensile and compressive capacity of each section shall be calculated.

   b. The system can be analyzed as a rigid gravity wall. The wall geometry is defined as ground-enclosed by the micropile-system envelope. Earth pressures are calculated using classical earth pressure theories, assuming that the wall deforms sufficiently to allow the soil to reach the active state. Sliding of the system shall be analyzed to include the shear capacity of the front micropile. The embedment of the micropile shall be checked to evaluate whether sufficient passive resistance can be developed in front of the micropile to mobilize the required micropile shear strength. Overturning shall be checked by means of summing overturning moments about toe of micropile wall. The bond length of the rear row of battered micropiles required to resist the overturning moment with respect to tensile rupture and pullout failure shall be computed.

   c. The micropile-wall system shall be analyzed using the free-earth-support method, as used for anchored-bulkhead design. The front row of closely-spaced micropiles is considered to be analogous to a sheet-pile wall. The battered rows

of micropiles are analogous to deadman anchors. The analysis shall be modified such that it is assumed that one-half of the calculated active earth load is applied to the vertical micropile row as a triangular pressure distribution. One-half of the calculated active earth load is applied to the rear-battered micropile row. A lateral pile analysis shall be completed for both the vertical and battered micropiles using an appropriate computer program, such as LPILE. Global stability of the micropile system shall be evaluated.

d. Finite-element analyses can be performed to predict deformations in the structure. Worst-case geometries and construction stages of the temporary excavation support for the wall shall be analyzed.

e. The potential for soil flow in between the relatively closely-spaced micropiles shall be evaluated.

5. Load Testing of Micropiles. Load testing is performed in the field to verify the following:

a. the design loads can be carried by the micropiles without excessive movements;
b. the contractor's equipment and installation procedures are adequate; and
c. the long-term behavior of the micropiles is as anticipated.

Micropiles are tested individually using the same conventional static-load testing procedures as are used for driven piles and drilled shafts. These tests include incremental loading which can be applied in compression, tension, or laterally, and which may be cycled, i.e., load/unload, until the micropile reaches the selected maximum test load; structural displacement limit; or ground creep, i.e., movement under constant load, threshold.

Well-defined testing programs, consistent with a well-developed design approach, are available. Load testing shall be performed to verify the displacement response and capacity of micropiles used for a wall system. Such a testing program shall be developed on a project-specific basis.

Performance data, including micropile load transfer, axial loads, bending moments, and displacements shall be collected for a micropile wall system to enable design methods to be updated.

410-8.0 REINFORCED SOIL SLOPES

Reinforced soil slopes (RSS) are a cost-effective alternative for new construction where right of way or other considerations can make a steeper slope desirable. As shown in Figure 410-8A, Slope Reinforcement Using Geosynthetics to Provide Slope Stability, multiple layers of reinforcement are placed in the slope during construction or reconstruction to reinforce the soil and provide increased slope stability. Reinforced soil slopes are a form of mechanically-stabilized earth that incorporates planar reinforcing elements in constructed earth sloped structures with face inclinations of usually 45 deg or less. Geosynthetics are used for reinforcement.

410-8.01 Purpose of Reinforcement

The principal purpose for using reinforcement is to construct an RSS embankment at an angle steeper than can otherwise be safely constructed with the same soil as shown in Figure 410-8A. The stability allows for construction of steepened slopes on a firm foundation for a new highway and as a replacement for a flatter unreinforced slope or a firm foundation for a retaining wall. A roadway can also be widened over existing flatter slopes without encroaching on existing right-of-way. In repairing a slope failure, the new slope will be safer, and reusing the slide debris rather than importing higher quality backfill can result in substantial cost savings. The minimum Factor of Safety for internal stability is 1.3.

Another purpose for using reinforcement is at the edges of a compacted fill slope to provide lateral resistance during compaction as shown in Figure 410-8B, Slope Reinforcement Providing Lateral Resistance During Compaction. The increased lateral resistance allows for an increase in compacted soil density over that normally achieved and provides increased lateral confinement for the soil at the face. A modest amount of reinforcement in compacted slopes can prevent sloughing and reduce slope erosion. Edge reinforcement also allows compaction equipment to more safely operate near the edge of the slope.

Right-of-way savings can be a substantial benefit, especially for a road-widening project in an urban area where acquiring new right of way is always expensive and maybe impossible. RSS also provide an economical alternative to a retaining wall. RSS can be constructed at about one-half the cost of an MSE wall structure.

Further compaction improvements have been made in cohesive soils through the use of geosynthetics with in-plane drainage capabilities, e.g., nonwoven geotextiles, which allow for rapid pore pressure dissipation in the compacted soil.

Compaction aids placed as intermediate layers between reinforcement in steepened slopes can also be used to provide improved face stability and to reduce layers of more expensive, primary reinforcement as shown in Figure 410-8A.

The use of vegetated-faced RSS that can be landscaped to blend with a natural environment can also provide an aesthetic advantage over a retaining-wall-type structure. However, there are maintenance issues to be addressed such as mowing grass-faced, steep slopes.

For an RSS structure, the choice of slope facing can be controlled with climatic and regional factors. For a structure of less than 30 ft height with slopes of 1:1 or flatter, a vegetative green slope can be constructed using an erosion-control mat or mesh and local grasses. Where vegetation cannot be successfully established or where significant runoff may occur, armored slopes using natural or manufactured materials shall be used to reduce future maintenance.

In terms of performance, due to inherent conservation in the design, RSS are actually safer than flatter slopes designed at the same Factor of Safety. As a result, there is a lower risk of long-term stability problems developing in the slopes. Such problems can occur in compacted fill slopes that have been constructed to low Factors of Safety or with marginal materials, e.g., deleterious soils such as shale, fine grained low cohesive silts, plastic soils, etc. The reinforcement can also facilitate strength gains in the soil over time from soil aging through improved drainage, further improving long-term performance.

410-8.02 Economics

RSS are not normally constructed with rigid facing elements. Slopes constructed with a flexible face can thus readily tolerate minor distortions that can result from settlement, freezing and thawing, or wet-drying of the backfill. As a result, soil which satisfies the requirements for embankment construction can be used in a RSS system. However, a higher-quality material reduces concerns for the durability of the reinforcement, and is easier to handle, place, and compact, which speeds construction.

The performance of RSS is generally not affected by differential longitudinal settlements.

RSS construction with an organic vegetative cover shall be chosen to be consistent with native perennial cover that establishes itself quickly and thrives with available site rainfall, and is maintenance free.

RSS can be cost effective in a rural environment, where right-of-way restrictions exist, or on a widening project where long sliver fills are necessary. In an urban environment, they shall be

considered where existing right of way is sufficient for construction, as they are always more economical than a vertically-faced MSE-wall structure.

410-8.03 References

Reference publications regarding RSS include the following.

1. Publication FHWA-RD-89-043, *Reinforced Soil Structures, Volume I: Design and Construction Guidelines*, U.S. Department of Transportation, Federal Highway Administration.

2. Publication FHWA-SA-93-025, *Guidelines for Design, Specification, and Contracting of Geosynthetic Mechanically Stabilized Earth Slopes and Embankments*, U.S. Department of Transportation, Federal Highway Administration.

3. National Cooperative Highway Research Program *Report 290, Reinforcement of Earth Slopes and Embankments*, National Research Council, Transportation Research Board.

Line and Form	Curvilinear, cords of a wall that reflect adjacent landforms
Color	Respond to local setting using the following: Colored concrete blocks Concrete stain or paint Natural or stained wood Painted or weathering steel Dip treatment to turn steel dull or gray
Texture	Respond to local setting using the following: Stone Barnboard concrete Bush-hammered concerete Ribbed rustication Form liner Cribbing Binwall with textured concrete veneer
Level of Detailing	Can be highly detailed
Accents	Pilasters Arches and caps Contrasting lines, colors, or textures
Fencing	Can include custom design

GENERAL AESTHETIC GUIDELINES
FOR RETAINING WALL IN URBAN AREA

Figure 410-1A

Back

	Scenic Route	Commercial Route
Line and Form	Curvilinear, cords of a wall that reflect adjacent landforms	Angular
Color	Respond to local setting using the following: Colored concrete blocks Concrete stain or paint Natural or stained wood Painted or weathering steel Dip treatment to turn steel dull or gray	Economically respond to local setting using the following: Colored concrete blocks Natural, stained, or painted concrete Natural, stained, or painted wood Weathering steel
Texture	Respond to local setting using the following: Stone Barnboard concrete Bush-hammered concrete Ribbing Form liner Cribbing Rustication Binwall with textured concrete veneer	Economically match local setting using the following: Rubbed-finish concrete Blasted concrete
Level of Detailing	Can be highly detailed	Simple
Accents	Pilasters Arches and caps Contrasting lines, colors, or textures	Minimal
Fencing	Can include custom design	Simple design

GENERAL AESTHETIC GUIDELINES
FOR RETAINING WALL IN RURAL AREA

Figure 410-1B

Back

FILL-SECTION WALL	
EXTERNALLY STABILIZED	INTERNALLY STABILIZED
Rigid Gravity or Semi-Gravity Wall: Cast-in-Place Concrete Gravity Wall Cast-in-Place Concrete Cantilever / Counterfort Wall	Retaining Wall with Reinforced Backfill: Segmental, Precast Facing Mechanically-Stabilized-Earth Wall Prefabricated Modular-Block Facing With Soil Reinforcement Geotextile / Geogrid / Welded-Wire-Facing MSE Wall
Prefabricared Modular-Gravity Wall: Crib Wall Bin Wall Gabion Wall	Reinforced Soil Slopes
CUT-SECTION WALL	
EXTERNALLY STABILIZED	INTERNALLY STABILIZED
Nongravity Cantilevered Wall: Sheet-Pile Wall Soldier-Pile and Lagging Wall Drilled-Shaft Wall	In-Situ Reinforced Wall: Soil-Nailed Wall
Anchored Wall: Ground Anchor, or Tieback Deadman Anchor	

CLASSIFICATION OF EARTH-RETAINING SYSTEMS

Figure 410-1C

Back

Wall Type	Perm.	Temp.	Cost Effective Height Range (ft)	Wall Face Cost ($/ft^2) (1)	Required R / W (2)	Differential Settlement Tolerance (3)	Advantages	Disadvantages
Concrete Gravity	X		3 - 10	25.00 – 35.00	0.5 – 0.7*H*	1 / 500	● Durable ● Requires small quantity of select backfill than MSE wall ● Concrete satisfies aesthetic rqmts.	● Deep foundation support can be necessary ● Relatively long construction time
Concrete Cantilevered	X		5 – 30	25.00 – 60.00	0.4 – 0.7*H*	1 / 500	● Durable ● Requires small quantity of select backfill than MSE wall ● Concrete satisfies aesthetic rqmts.	● Deep foundation support can be necessary ● Relatively long construction time
Concrete Counterfort	X		30 – 60	25.00 – 60.00	0.4 – 0.7*H*	1 / 500	● Durable ● Requires small quantity of select backfill than MSE wall ● Concrete satisfies aesthetic rqmts.	● Deep foundation support can be necessary ● Relatively long construction time
Concrete Crib	X		5 – 35	25.00 – 35.00	0.5 – 0.7*H*	1 / 300	● Does not require skilled labor or specialized equipment ● Rapid construction	● Difficult to make height adjustments in field
Metal Bin	X		5 – 35	25.00 – 35.00	0.5 – 0.7*H*	1 / 300	● Does not require skilled labor or specialized equipment ● Rapid construction	● Difficult to make height adjustments in field ● Subject to corrosion in aggressive environment
Gabion	X		5 – 25	25.00 – 50.00	0.5 – 0.7*H*	1/ 50	● Does not require skilled labor or specialized equipment	● Needs adequate stone source ● Construction requires significant labor
MSE (Precast Facing)	X		10 – 65	20.00 – 35.00	1.7 – 2.0*H*	1/ 100	● Does not require skilled labor or specialized equipment ● Flexibility in facing choice	● Requires select backfill ● Subject to corrosion in aggressive environment
MSE (Geotextile / Geogrid / Welded Wire Facing)	X	X	5 – 50	15.00 – 35.00	0.7 – 1.0*H*	1 / 60	● Does not require skilled labor or specialized equipment ● Flexibility in facing choice	● Facing may not be aesthetically pleasing ● Geosynthetic reinf. subject to degradation in some environments
Modular Block with Soil Reinforcement	X		5 – 25	15.00 – 25.00	0.7 – 1.0*H*	1 / 200	● Does not require skilled labor or specialized equipment ● Flexibility in facing choice ● Blocks are easily handled	● Requires select backfill ● Metal reinf. subject to corrosion in aggressive environment ● Difficult to achieve positive reinf. connection to blocks
Reinforced Soil Slopes	X	X	10 – 100	10.00 – 25.00	0.5 – 1.0*H*	1 / 60	● Does not require skilled labor or specialized equipment ● Flexibility in facing choice ● Vegetation provides ultraviolet light protection to geosynthetic reinforcement	● Facing may not be aesthetically pleasing ● Geosynthetic reinf. subject to degradation in some environments ● Vegetated soil face requires significant maintenance

Notes: (1) Total installed cost in 1998 U.S. dollars.
(2) R/W requirements expressed as distance, as fraction of wall height *H*, behind the wall face where fill placement is generally required for flat backfill conditions.
(3) Ratio of the difference in vertical settlement between two points along the wall to the horizontal distance between the points.

FILL-SECTION-WALL-SYSTEM SELECTION CHART

Figure 410-2A

Back

Wall Type	Perm.	Temp.	Cost Effective Height Range (ft)	Wall Face Cost ($/ft^2) (1)	Required R / W (2)	Lateral Movements	Water Tightness	Advantages	Disadvantages
Sheet Piles	X	X	0 – 15	15 – 130	None	Large	Fair	● Rapid Construction ● Readily available	● Difficult to construct in hard ground or through obstructions
Soldier Piles / Lagging	X	X	0 – 15	10 – 35	None	Medium	Poor	● Rapid Construction ● Soldier beams can be drilled or driven	● Difficult to maintain vertical tolerances in hard ground ● Potential for ground loss at excavated face
Anchored	X	X	15 – 65 (3)	15 – 75	0.6*H* + anchor bond lgth.	Small to medium	N / A	● Can resist large horizontal pressures ● Adaptable to varying site conditions	● Requires skilled labor and specialized equipment ● Anchors can require permanent easements
Soil Nailed	X	X	10 – 65	15 – 55	0.6 – 1.0*H*	Small to medium	N / A	● Rapid construction ● Adaptable to irregular wall alignment	● Nails can require permanent easements ● Difficult to design and construct below water table

Notes: (1) Total installed cost in 1998 U.S. dollars.
(2) R/W requirements expressed as distance, as fraction of wall height *H*, behind the wall face where wall anchorage components, i.e., gound anchors and soil nails, are installed.
(3) For soldier-pile and lagging wall only.

CUT-SECTION-WALL-SYSTEM SELECTION CHART

Figure 410-2B

Back

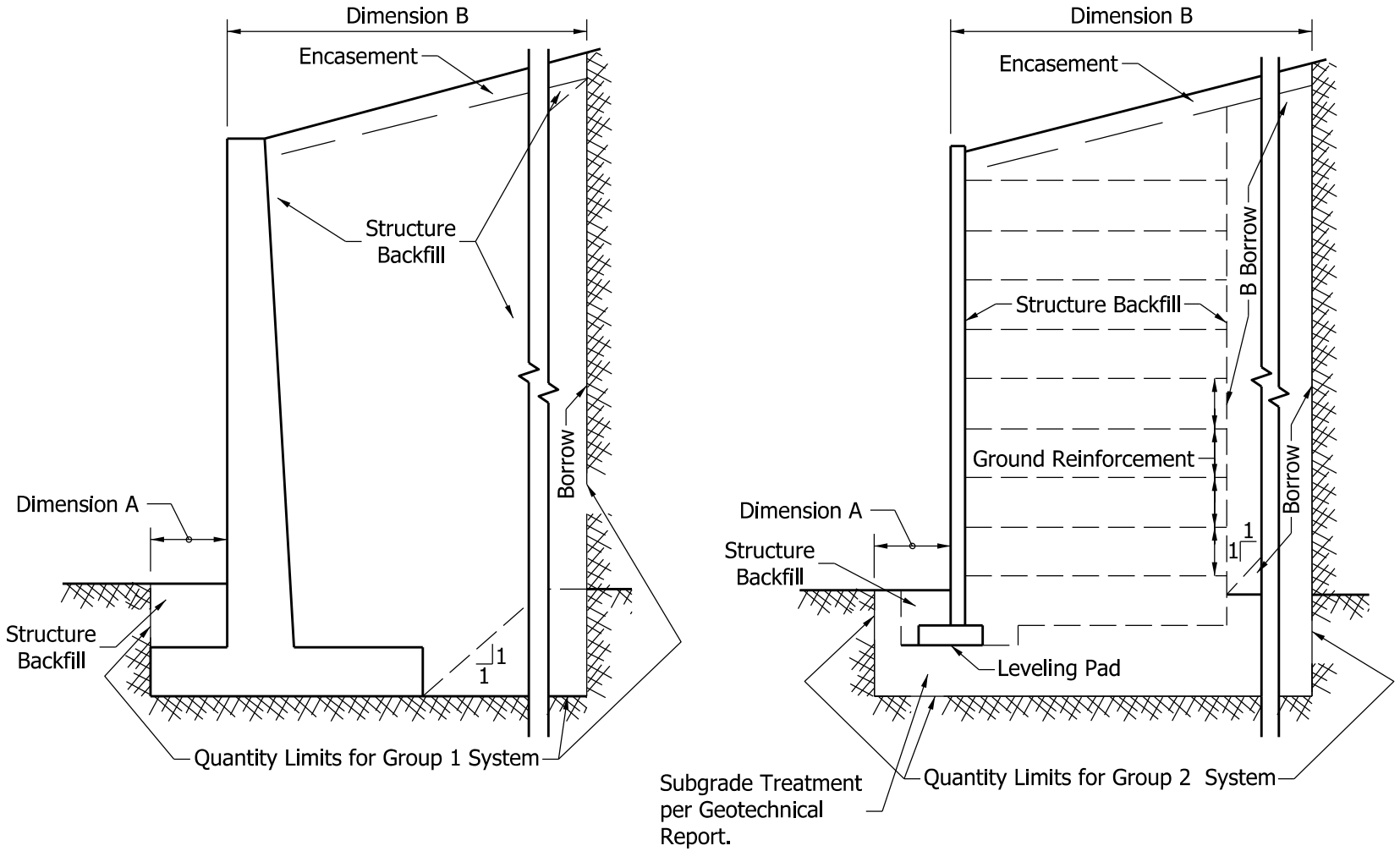

Note: The limits for establishing pay quantities for an alternate wall design should be indentical. The outermost limit of construction for an individual wall should be used as the limit for computing pay quantities for all other alternate wall designs.

PAY QUANTITY LIMITS FOR WALL-SYSTEM GROUPS

Figure 410-2C

Back

CLASSIFI-CATION	WALL TYPE	GROUP
Externally-stabilized fill	Bin, metal or concrete	2
	Cantilever, cast-in-place-concrete	1
	Crib	2
	Gabion	1
	Gravity, cast-in-place-concrete	1
	T-wall	2
Internally-stabilized fill	Mechanically-stabilized earth, prefabricated facing, inextensible ground reinf.	2
	Modular-block, prefabricated facing, with or without ground reinf.	2
	Reinforced-soil slope	2
Externally-stabilized cut	Anchored	1
	Sheet-pile	1
	Slurry, or diaphragm	1
	Soil-mixed	1
	Soldier-pile and lagging	1
	Drilled Shaft	1
Internally-stabilized cut	Micropile	1
	Soil-nailed	1

WALL TYPES AND CLASSIFICATION OF EARTH-RETAINING SYSTEMS

Figure 410-2D

Back

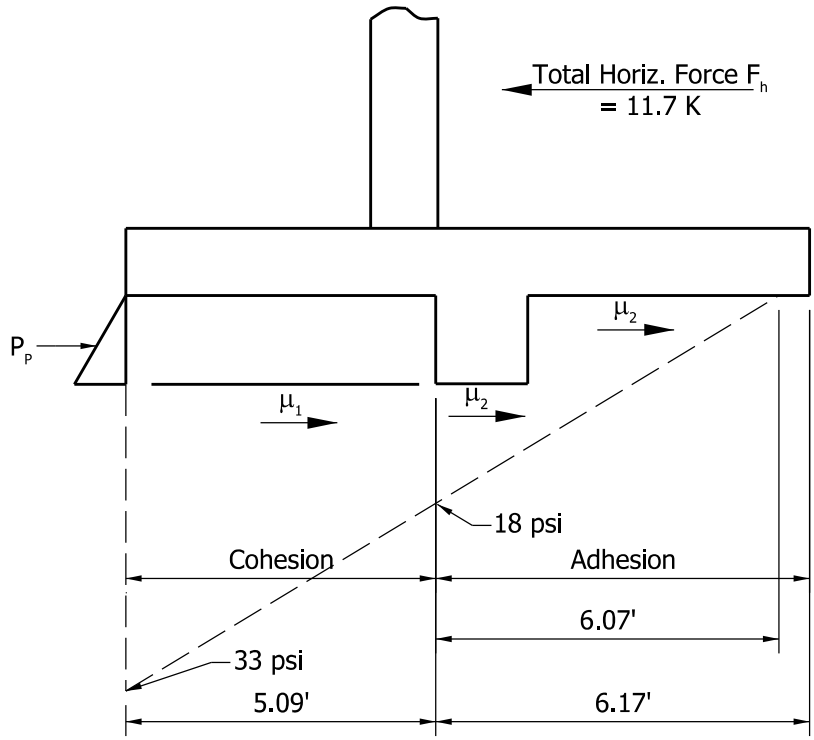

μ_1 = Coefficient of Friction for Soil on Soil = 0.70

μ_2 = Coefficient of Friction for Concrete on Soil = 0.45

Total Frictional Force $F_f = 0.70\ (1/2)\ \frac{(33 + 18)}{7}(5.09) + 0.45\ (1/2)\frac{(18)}{7}(6.07)$

$= 12.9 + 3.6$

$= 16.5$ k per running foot

Passive Pressure in front of Wall = P_p

$P_p = 1/2\ K_p W h^2$; $W = 0.12$ k/ft³

$P_p = 1/2(0.75)(0.12)(5.5)^2 = 1.36$ k

FACTOR OF SAFETY AGAINST SLIDING FOR SPREAD FOOTING - EXAMPLE

Figure 410-4A

Back

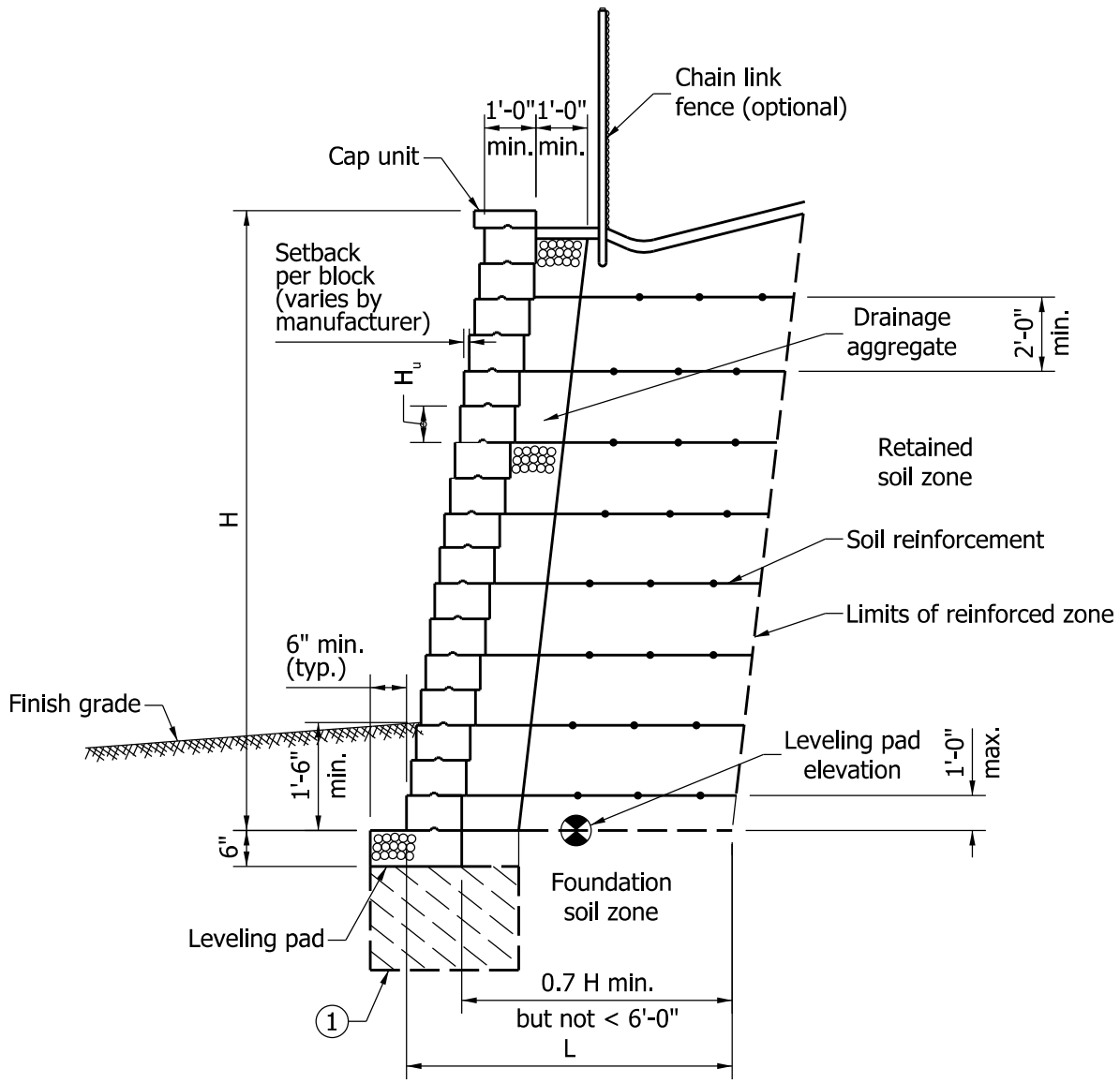

1 Soil below leveling pad which is subject to frost heave should be removed to an elevation 3 ft below finished grade and replaced with granular backfill.

MODULAR-BLOCK-WALL TYPICAL SECTION

Figure 410-5A

Back

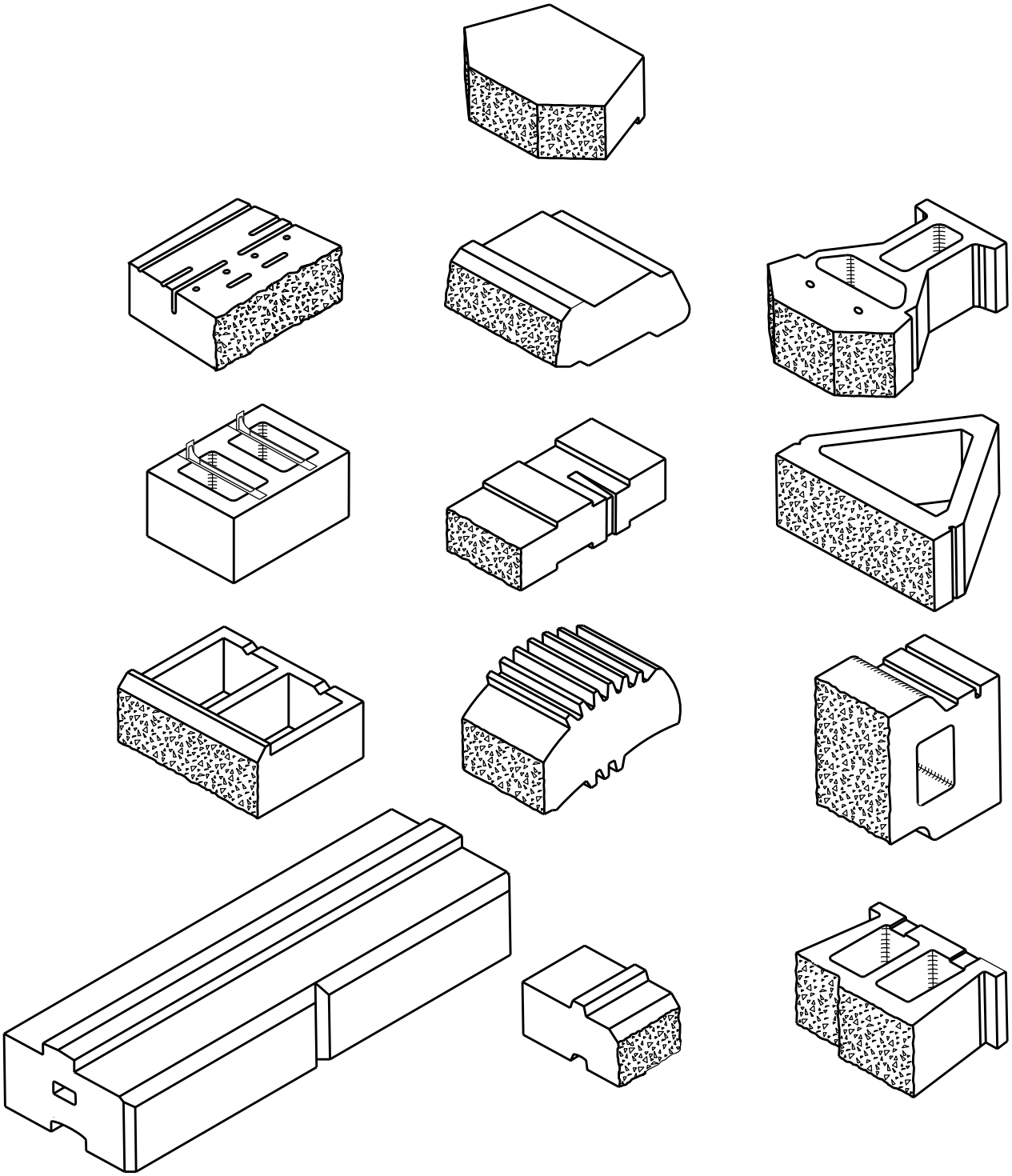

TYPES OF MODULAR BLOCKS

Figure 410-5B

Back

δ = external interface friction angle

δ = the lesser of Ø, or Ø, where

$Ø_i$ = angle of intetnal friction of reinforced infill soil.

$Ø_r$ = angle of internal friction of retained soil.

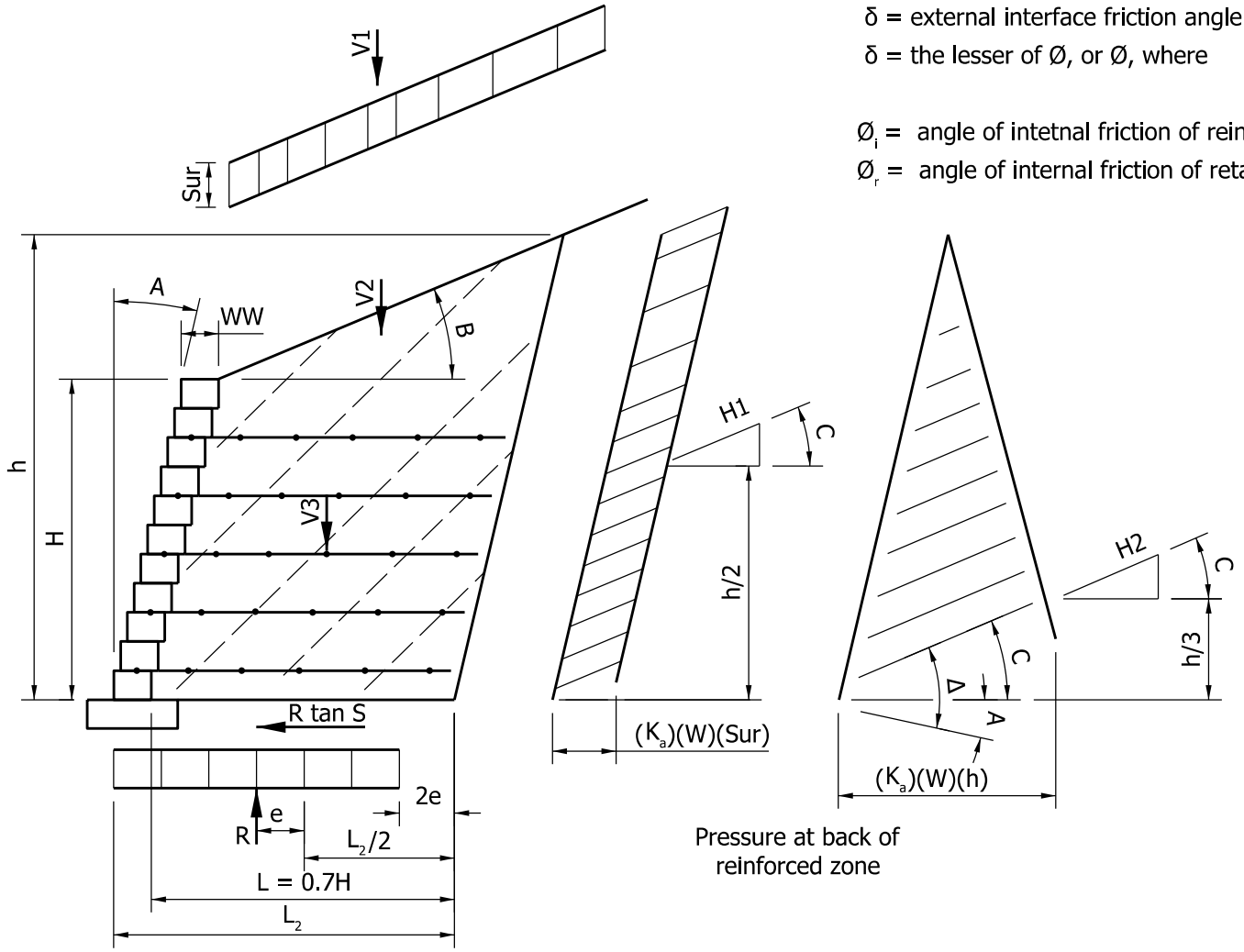

EXTERNAL STABILITY CALCULATIONS SLOPING OR HORIZONTAL BACKFILL, B ≥ 0°

Figure 410-5C

Back

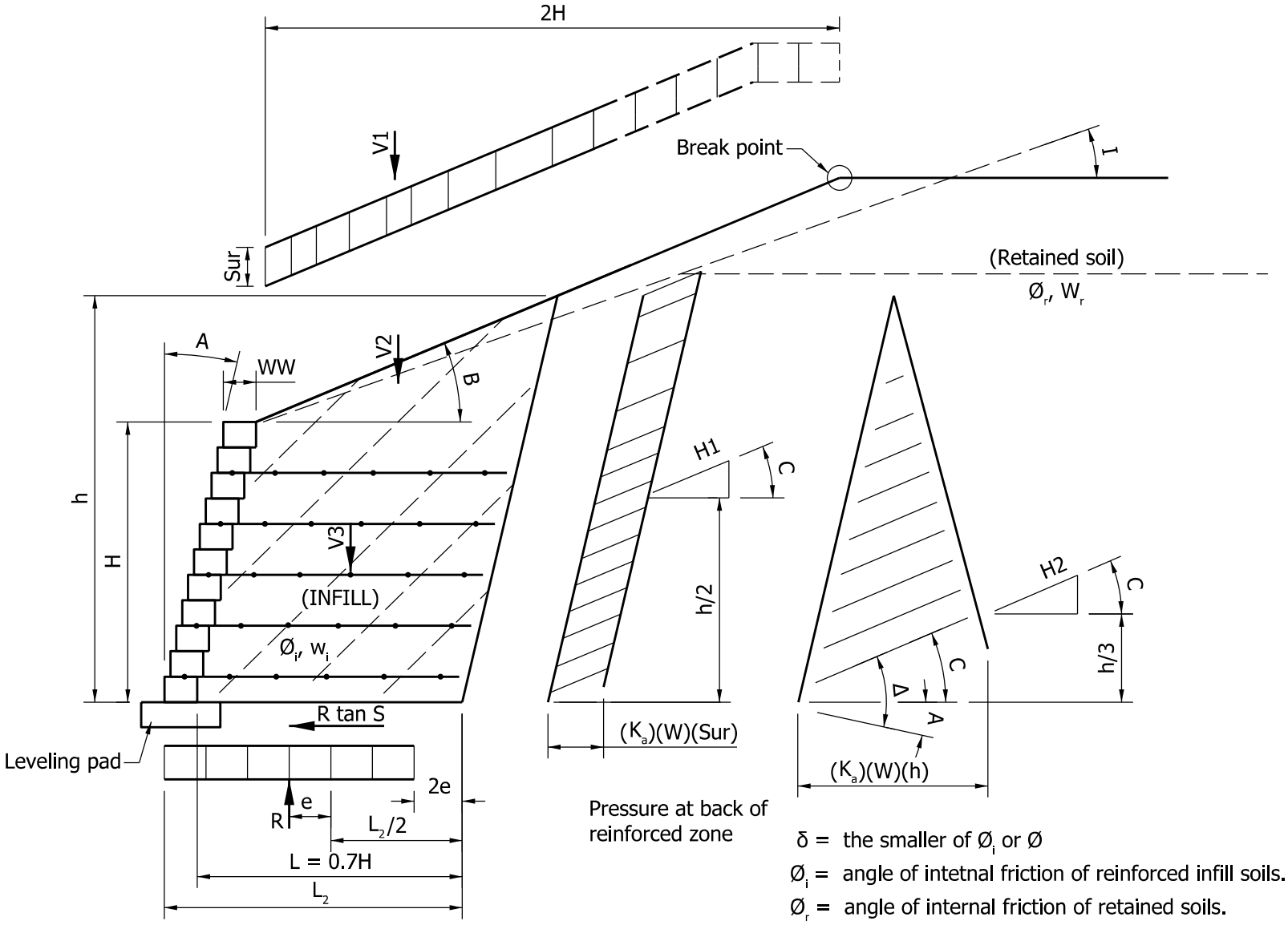

IF C > B : LET C = B

EXTERNAL STABILITY CALCULATIONS
BROKEN-BACK BACKFILL, B > 0°

Figure 410-5D

Back

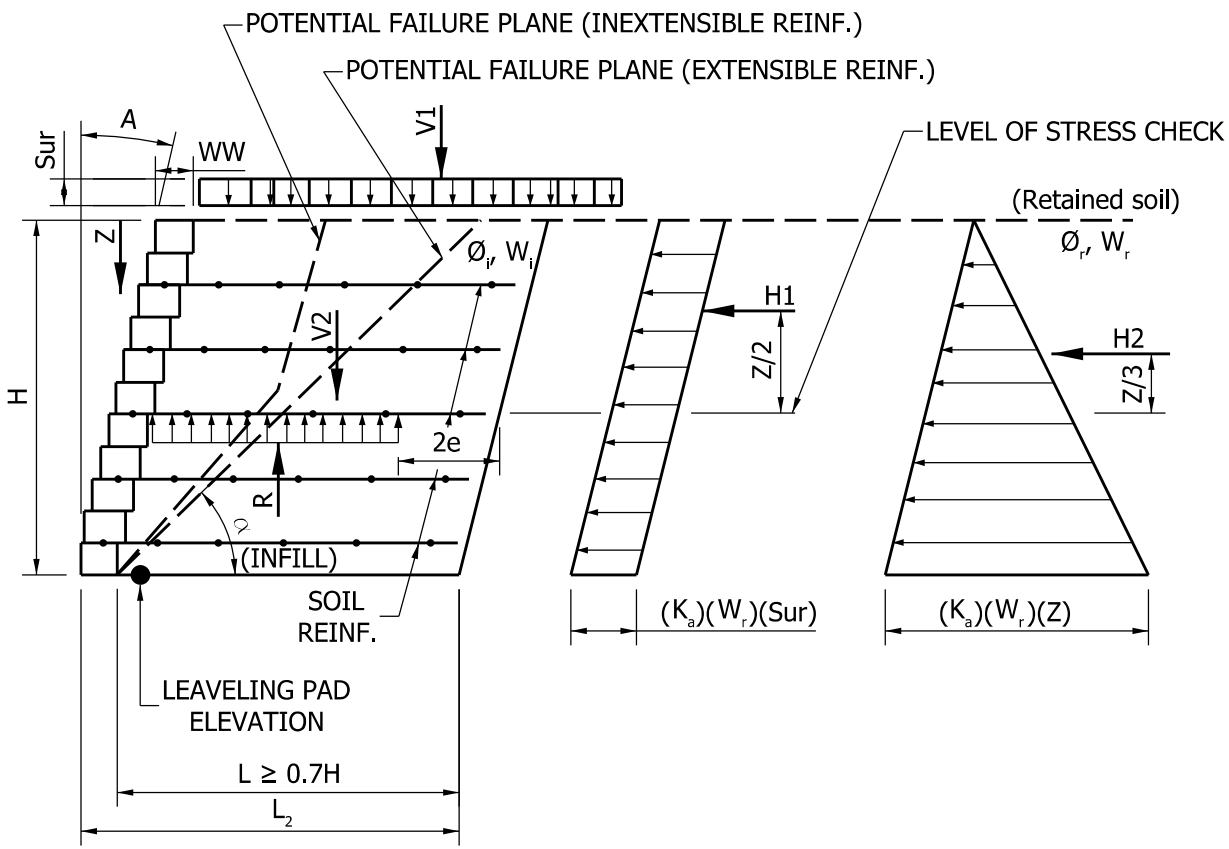

δ = the lesser of Ø, or Ø, where

$Ø_i$ = angle of internal friction of reinforced infill soils.

$Ø_r$ = angle of internal friction of retained soils.

EXAMPLE A: HORIZONTAL BACKSLOPE

Figure 410-5E

Back

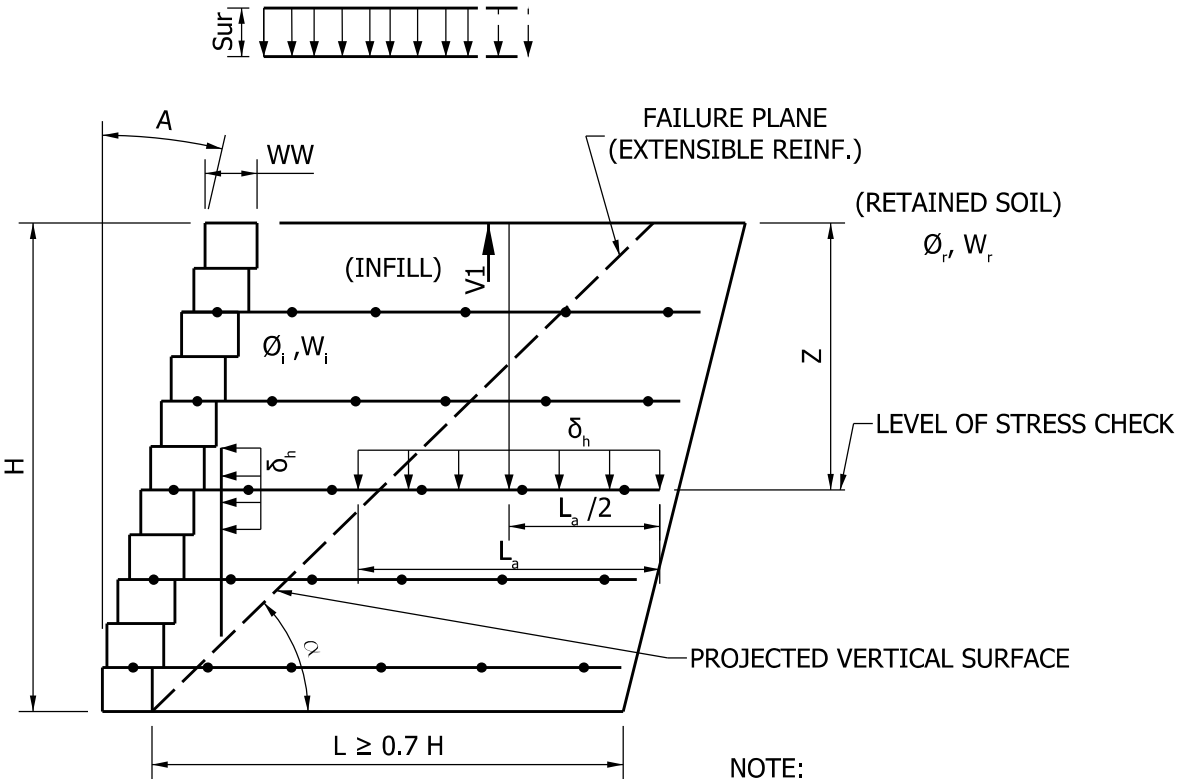

NOTE:
FAILURE PLANE FOR EXTENSIBLE REINF. SHOWN.
IF STEEL REINF. IS USED, REPLACE FAILURE PLANE
WITH ONE FOR INEXTENSIBLE REINF.

EXAMPLE B: BROKEN-BACK BACKSLOPE

Figure 410-5F

Back

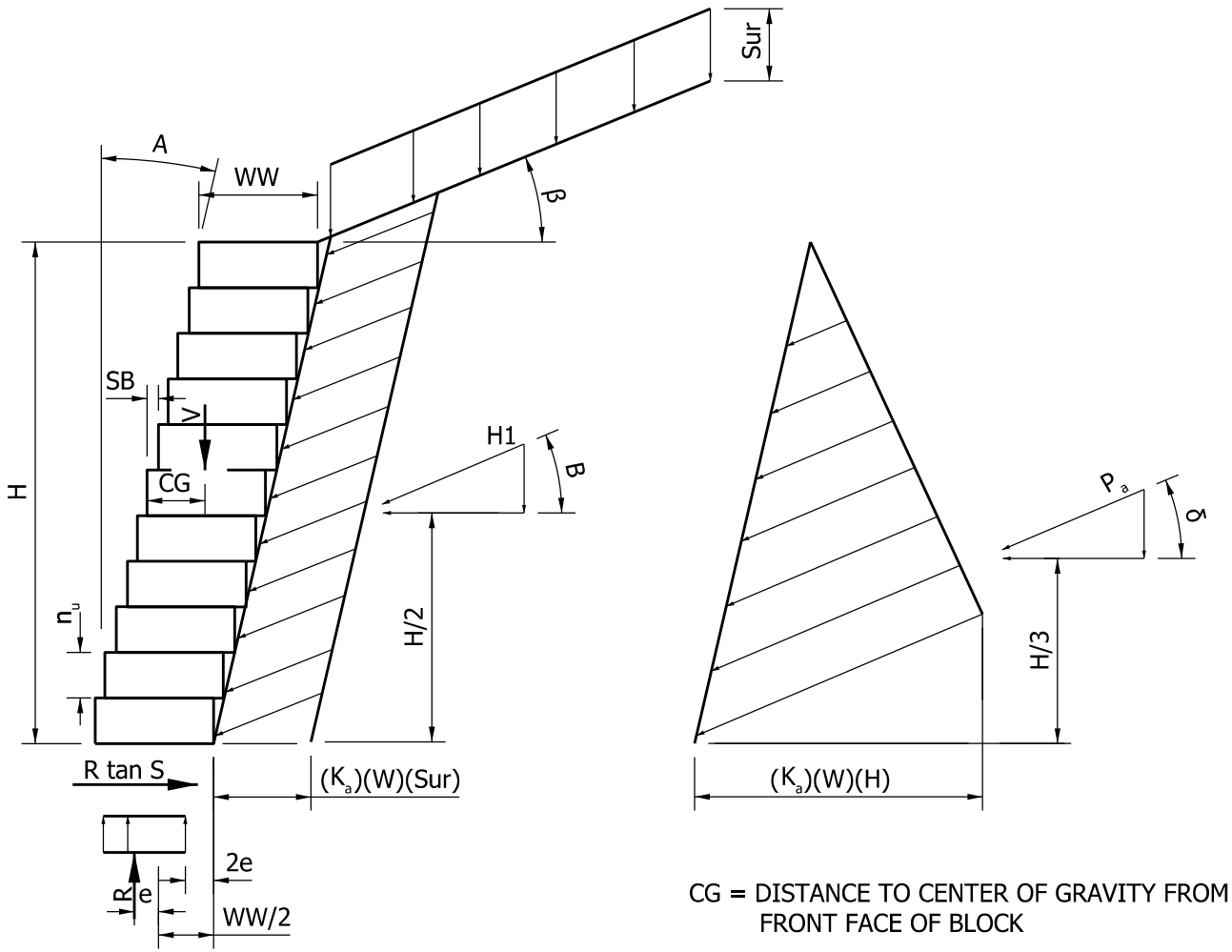

MODULAR BLOCK GRAVITY WALL ANALYSIS

Figure 410-5G

Back

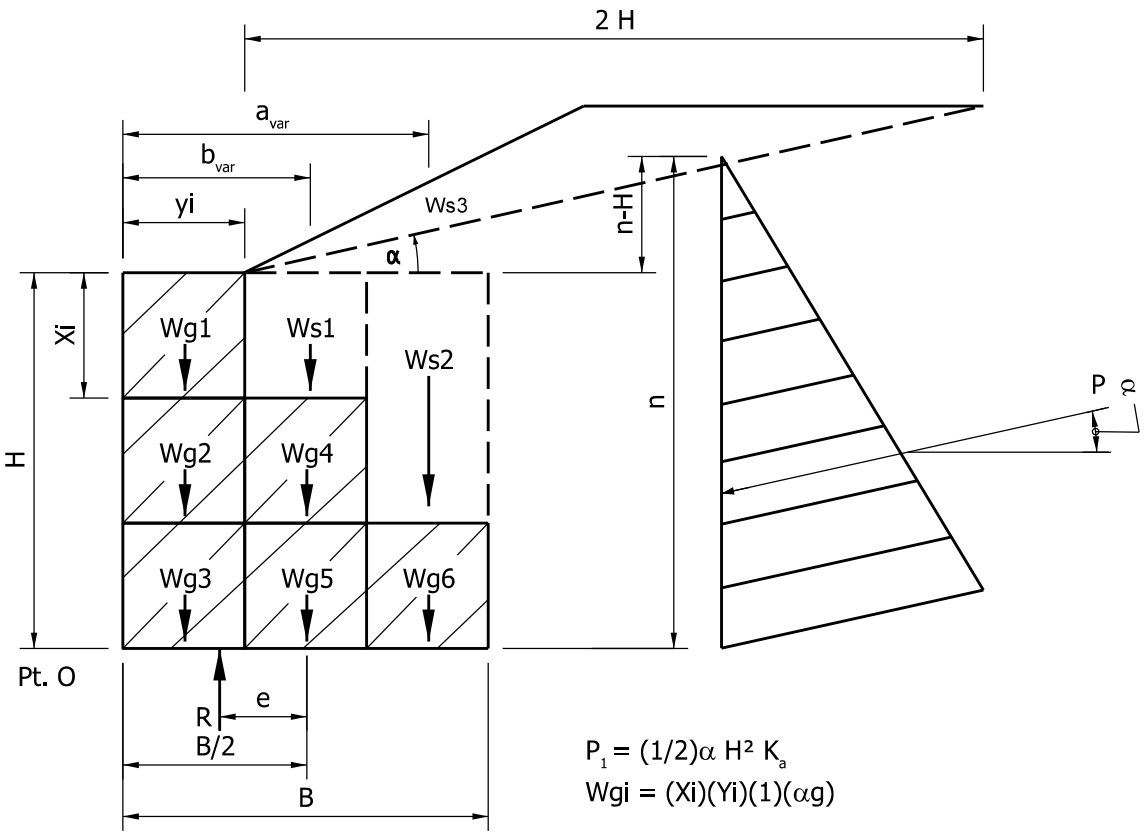

P1 = Lateral Earth Pressure

P2 = Surcharge Load

Wgi = Weight of individual unit

Wsi = Weight of soil above units

BROKEN-BACK SLOPE - SIMPLIFIED EXAMPLE

Figure 410-6A

Back

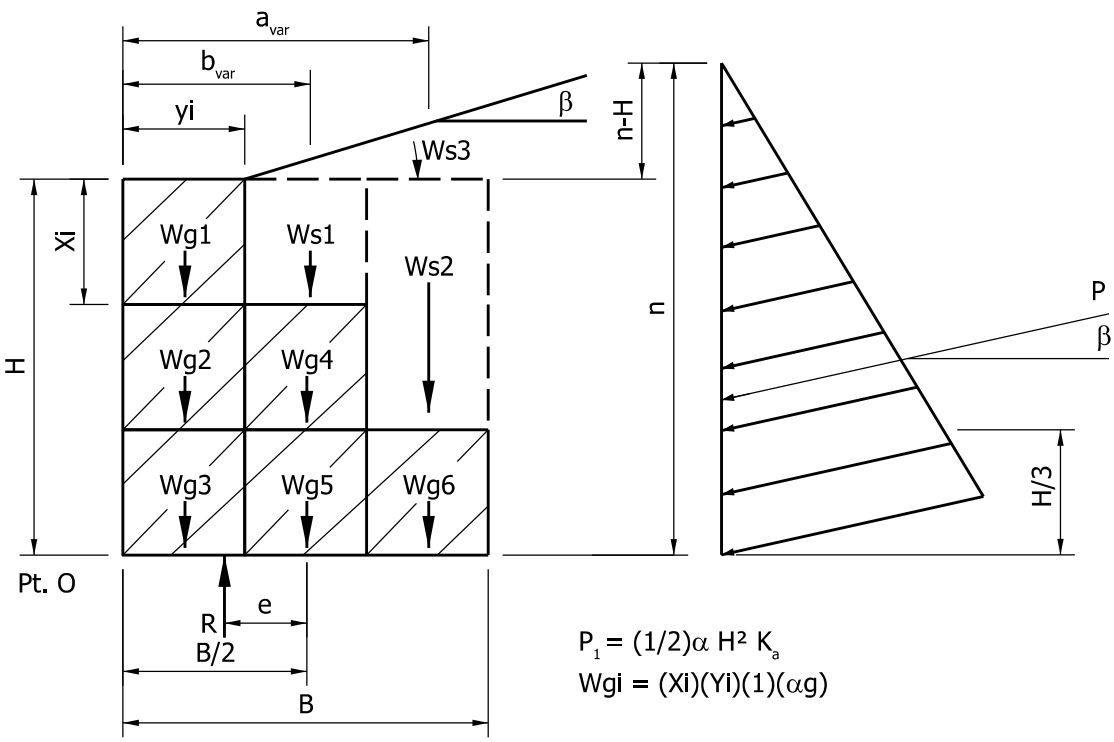

P1 = Lateral Earth Pressure
P2 = Surcharge Load
Wgi = Weight of individual unit
Wsi = Weight of soil above units

SLOPING BACKFILL - SIMPLIFIED EXAMPLE

Figure 410-6B

Back

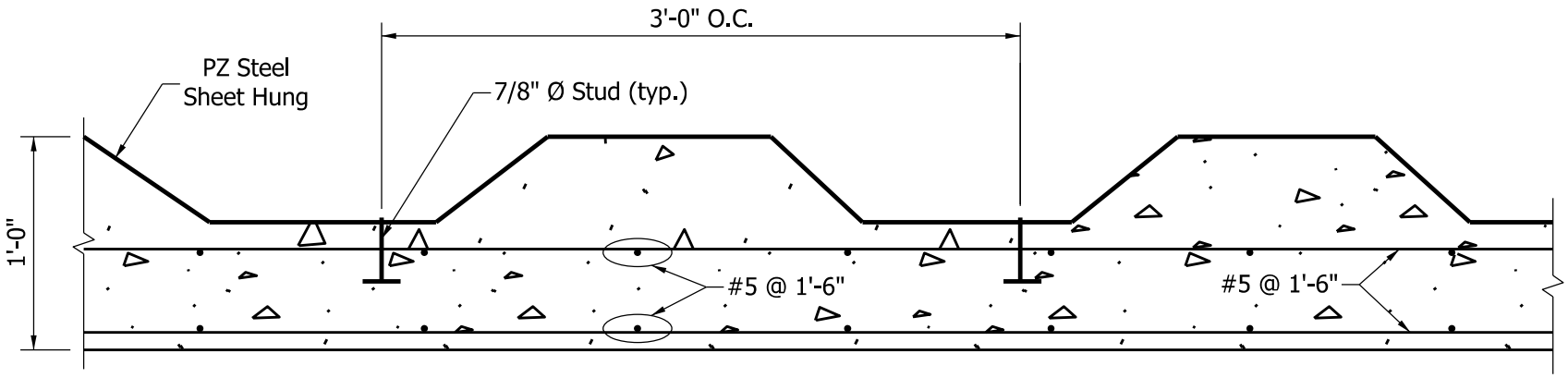

SHEET-PILING WALL - CONCRETE FACING DETAIL

Figure 410-7A

Back

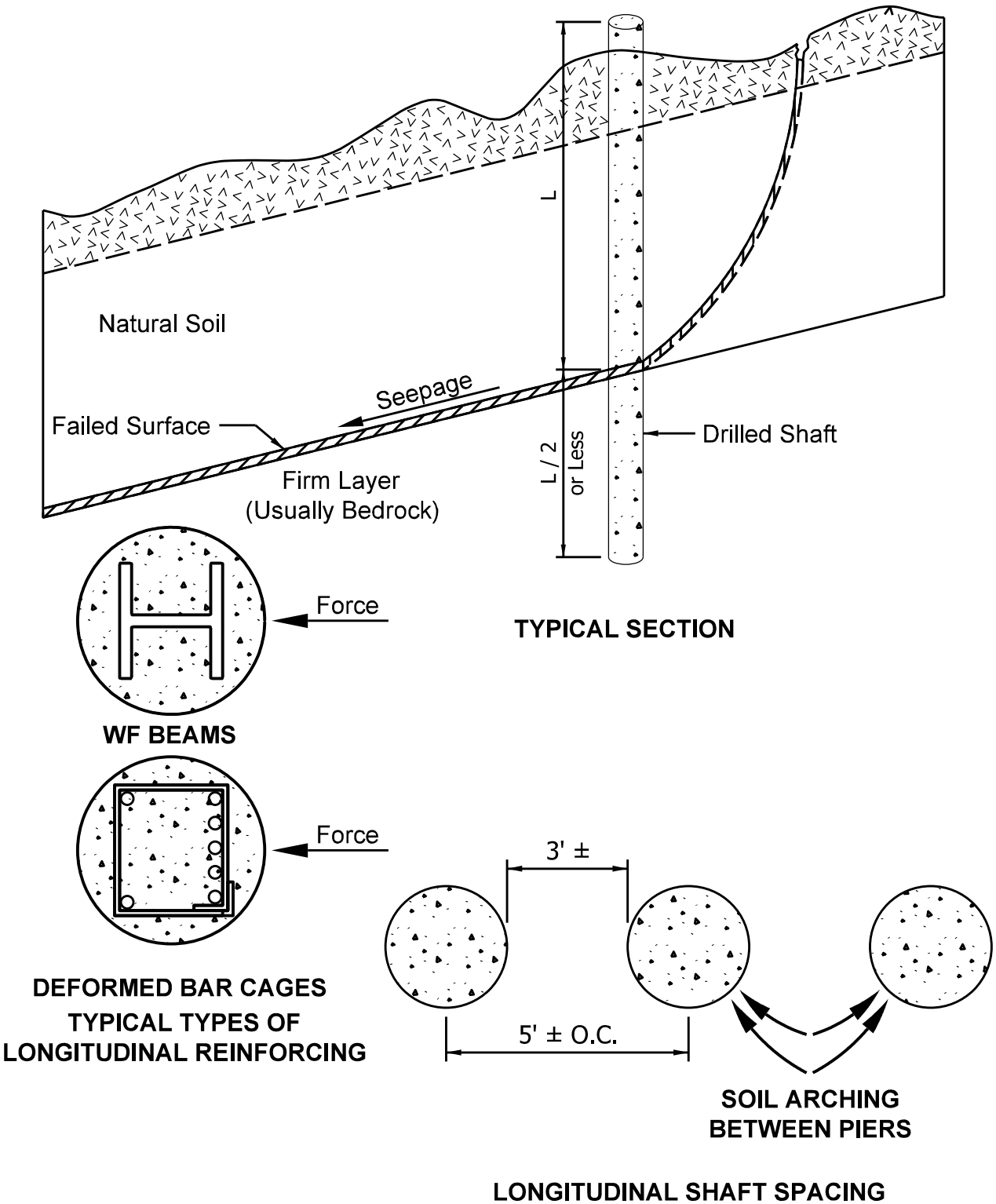

UNSTABLE SLOPE WARRANTING DRILLED-SHAFT SYSTEM

Figure 410-7B

Back

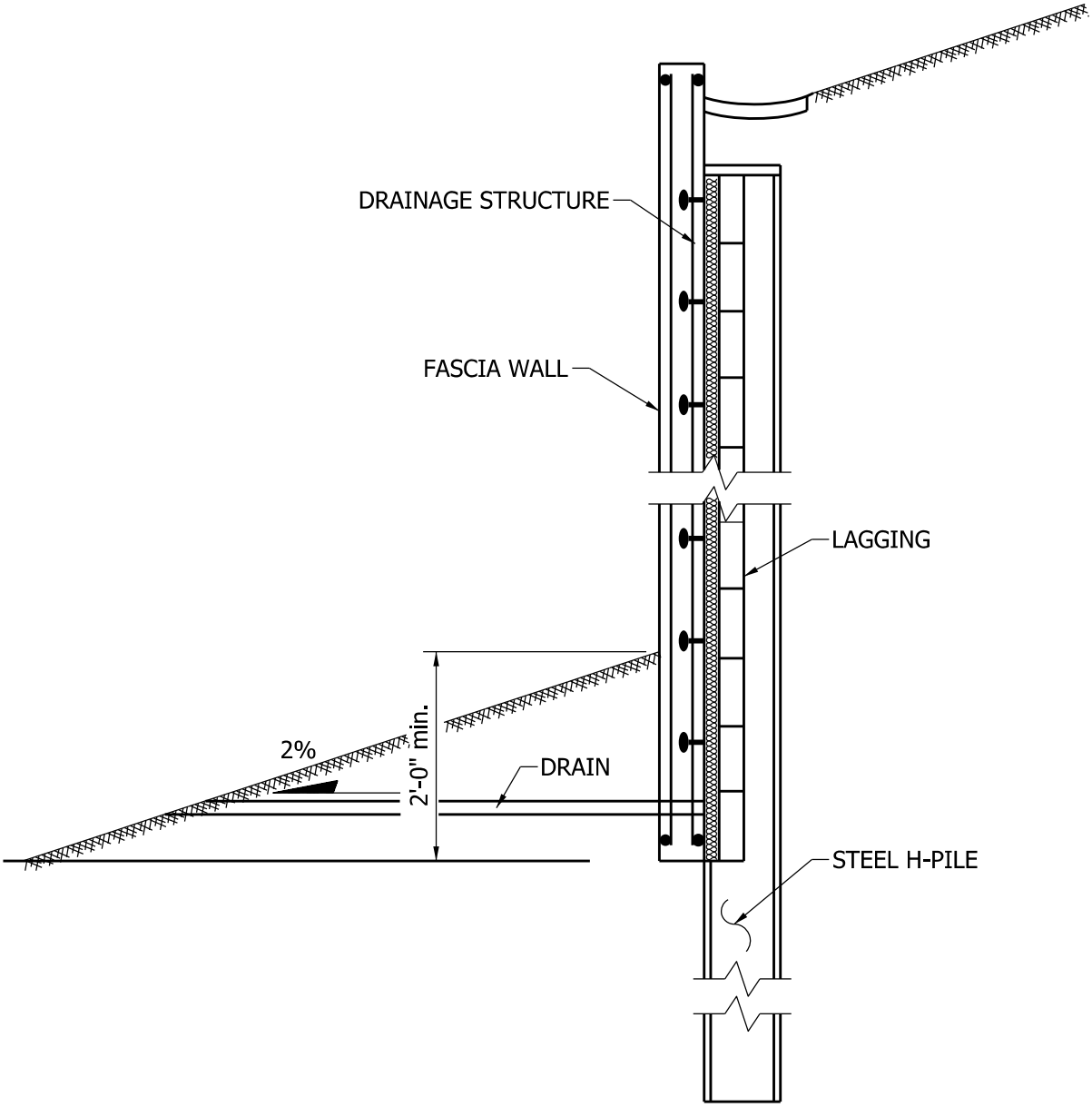

ANCHORED WALL TYPICAL SECTION

Figure 410-7C

Back

Soil Type	Depth Ranges		Total Unit Weight (lb / ft^3)	Undrained [3]		Drained [4]	
	Top of Stratum (ft)	Bottom of Stratum (ft)		Cohesion, *C* (lb / ft^2)	Friction Angle, φ (deg)	Cohesion, *C* (lb / ft^2)	Friction Angle, φ (deg)
Fill – Sandy Loam with Slag and Cinders	0	2 to 4	115	0	28	0	28
Soft to Medium Stiff Clay Loam	2 to 4	6 to 8 [1]	115	1500	0	200	25
Stiff to Hard Clay Loam [2]	6 to 8 [1]	13 to 24	120	3000	0	200	28
Stiff to Hard Clay [2]	8 to 13	12 to 24	120	2500	0	200	25
Stiff to Hard Loam	14 to 24	30 to 40	130	4000	0	200	32

Notes: (1) Medium stiff clay loam extends to a depth of 15 ft below grade.
(2) Clay loam and clay strata are interbedded. See specific soil boring logs for details of stratifications at specific locations.
(3) Undrained strength parameter estimated from unconfined compression tests and calibrated penetrometer tests.
(4) Drained strength parameter estimated from approximate correlations with Plasticity Index.

SOIL PARAMETERS FOR SOIL-NAILED-WALL DESIGN

Figure 410-7D

Back

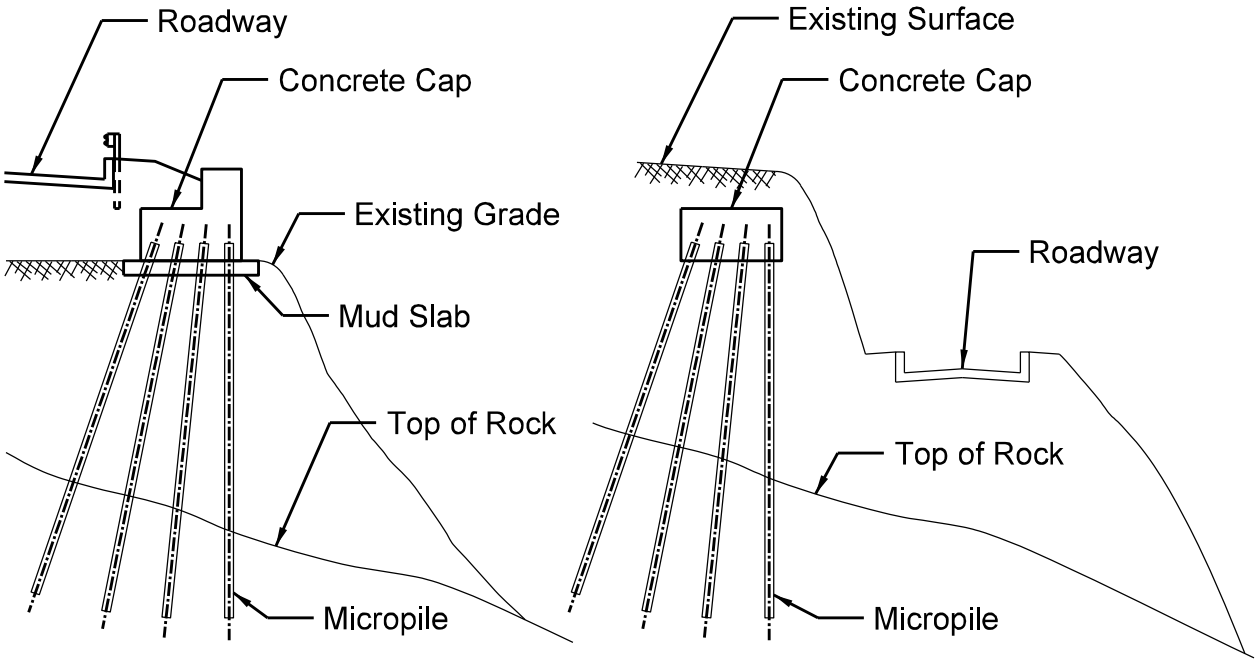

ROADWAY ABOVE SLOPE **SLOPE ABOVE ROADWAY**

TYPICAL ROADWAY SLOPE STABILIZATION

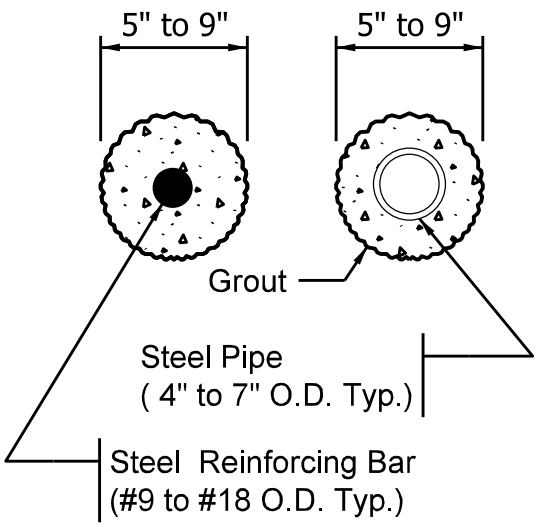

TYPICAL PILE SECTIONS

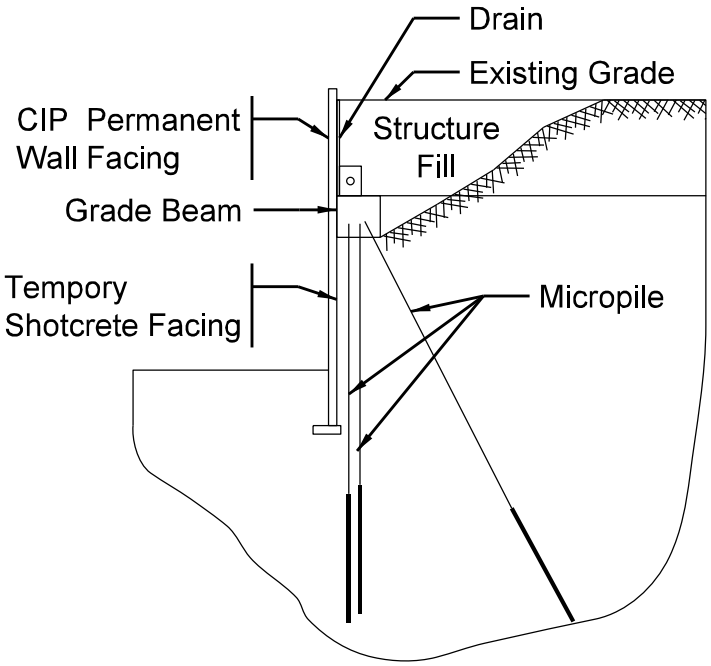

TYPICAL EARTH RETENTION SECTION

MIRCOPILE RETAINING WALL DETAILS

Figure 410-7E

Back

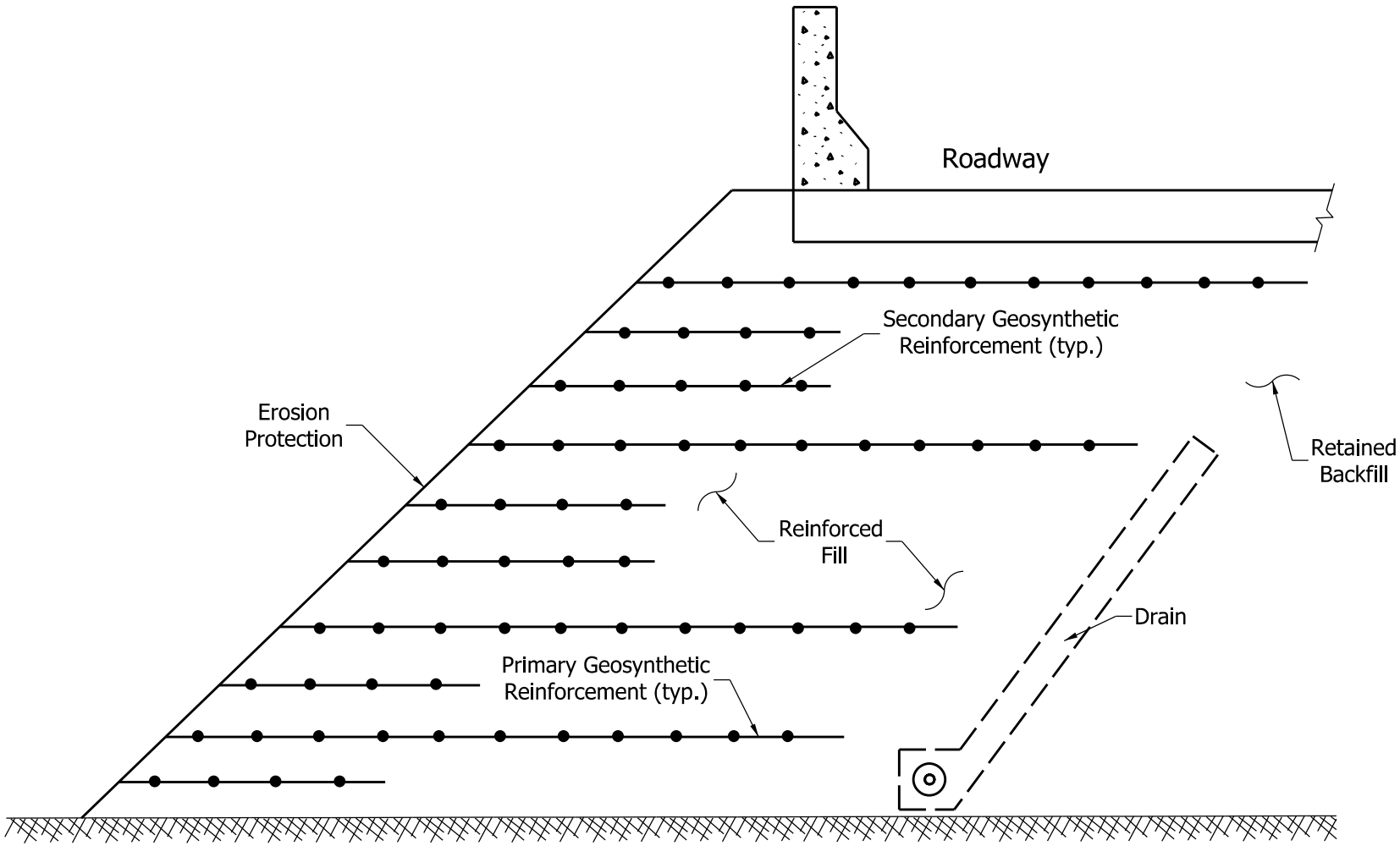

SLOPE REINFORCEMENT USING GEOSYNTHETICS
TO PROVIDE SLOPE STABILITY

Figure 410-8A

Back

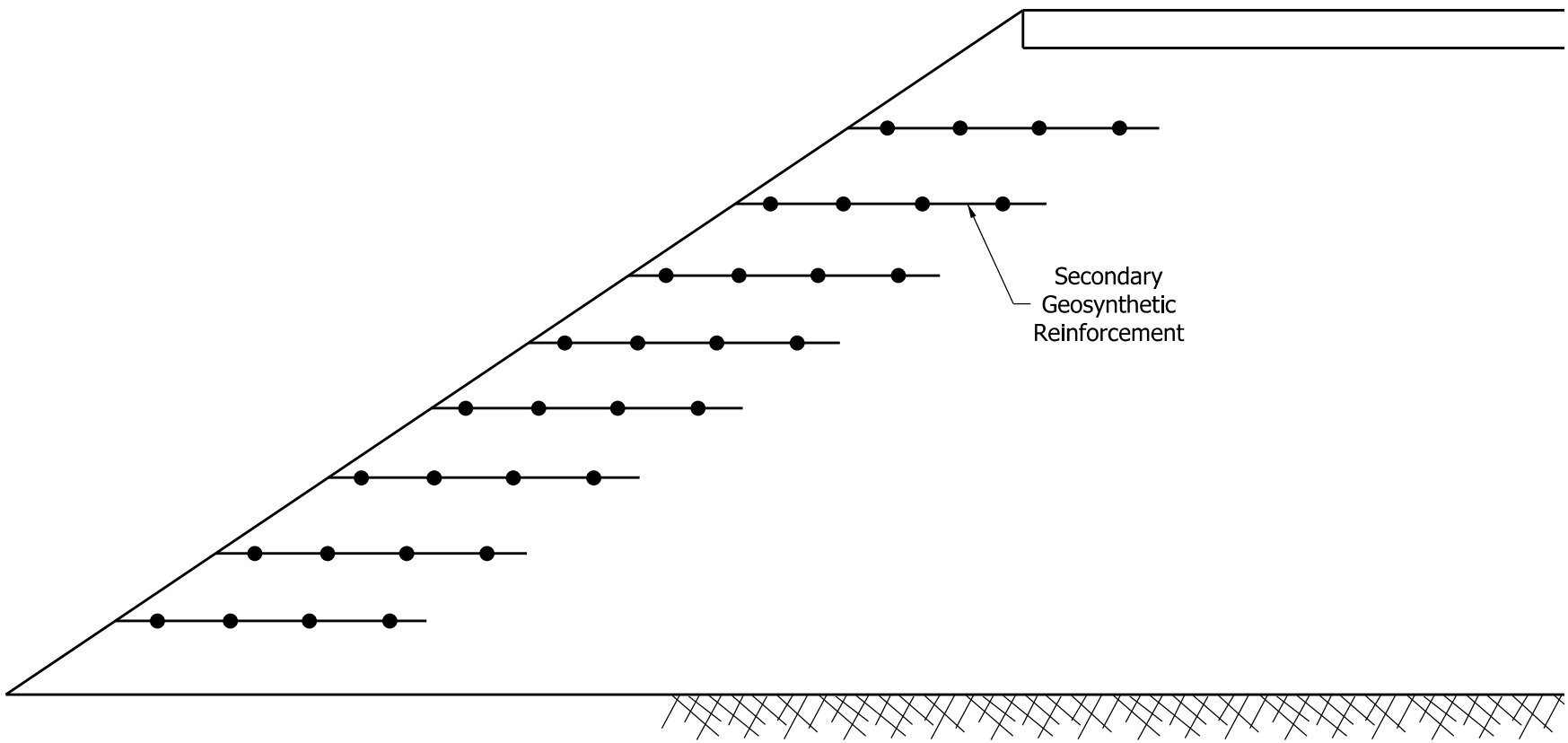

SLOPE REINFORCEMENT PROVIDING LATERAL RESISTANCE DURING COMPACTION

Figure 410-8B

Back