CHAPTER 40

Basic Design Controls

NOTE: This chapter is currently being re-written and its content will be included in Chapter 302 in the future.

Design Memorandum	Revision Date	Sections Affected
14-03	Feb. 2014	40-8.02(01), 40-8.04(01)
14-10	Jul. 2014	40-8.01, 40-8.04, Figures 40-8B, 40-8C
14-11	Jul. 2014	40-8.04(03), Figure 40-8A

TABLE OF CONTENTS

TABLE OF CONTENTS 2
LIST OF FIGURES 4
40-1.0 HIGHWAY SYSTEMS 5
40-1.01 Functional-Classification System 5
40-1.01(01) Arterial 5
40-1.01(02) Collector 6
40-1.01(03) Local Road or Street 7
40-1.01(04) Recreational Road 7
40-1.02 Urban Design Subcategories by Type of Area 7
40-1.03 Federal-Aid System 9
40-1.03(01) National Highway System 9
40-1.03(02) Surface Transportation Program 10
40-1.03(03) Bridge Replacement and Rehabilitation Program 11
40-1.04 Jurisdictional System 11
40-1.04(01) State Highway System 11
40-1.04(02) County Road System 11
40-1.04(03) City or Town Street System 12
40-1.04(04) DNR Recreational Roads 12
40-1.05 National Truck Network 12
40-2.0 TRAFFIC-VOLUME CONTROLS 13
40-2.01 Definitions 13
40-2.02 Design Year Selection 14
40-2.02(01) Roadway Design 14
40-2.02(02) Other Highway Elements 15
40-2.03 Design-Hourly-Volume Selection 16
40-2.04 Capacity Analysis 16
40-2.04(01) Objective 16
40-2.04(02) Responsibility 17
40-3.0 SPEED 17
40-3.01 Definitions 17
40-3.02 Design-Speed Selection 19
40-3.02(01) Geometric Design Considerations 19
40-3.02(02) Regulatory Speed vs. Design Speed 20
40-3.02(03) Legal Speed Limit 21
40-4.0 VEHICULAR CHARACTERISTICS 23

40-5.0 ACCESS-CONTROL Definitions 23

40-6.0 PROJECT SCOPE OF WORK 24
40-6.01 Definitions 24
40-6.01(01) New Construction 24
40-6.01(02) Complete Reconstruction, Freeway 25
40-6.01(03) Partial Reconstruction (4R), Freeway 25
40-6.01(04) Reconstruction (4R), Non-Freeway 26
40-6.01(05) 3R Project, Freeways 27
40-6.01(06) 3R Project, Non-Freeway 28
40-6.01(07) Partial 3R Project 30
40-6.01(08) High-Accident-Location Improvement, Non-Freeways 30
40-6.01(09) Traffic-Control-Devices Project 31
40-6.02 Application 31
40-6.02(01) National Highway System (NHS) Project 31
40-6.02(02) Non-NHS Project 32
40-6.02(03) Procedures 34

40-7.0 FHWA INVOLVEMENT 35

40-8.0 ADHERENCE TO DESIGN CRITERIA [Rev. Feb. 2014, Rev Jul. 2014] 36
40-8.01 Department Intent [Rev. Jul. 2014] 36
40-8.02 Hierarchy of Design Criteria 36
40-8.02(01) Level One [Rev. Feb. 2014] 36
40-8.02(02) Level Two 38
40-8.02(03) Level Three 39
40-8.03 Design-Exception Process 40
40-8.04 Procedure for Level One Design Exception [Rev. Jul. 2014] 41
40-8.04(01) Department Procedure [Rev. Feb. 2014, Jul. 2014] 41
40-8.04(02) FHWA Procedure 47
40-8.04(03) Procedure for Exception to Vertical Clearance on the Interstate System [Rev. Jul 2014] 47
40-8.04(04) Procedure for Local Project with Federal Funds 48
40-8.04(05) Procedure for 100% Locally-Funded Project 48
40-8.04(06) Signature Block 49
40-8.05 Documentation 49

FIGURES 50

LIST OF FIGURES

Figure	Title
40-1B	National Truck Network in Indiana
40-2A	Recommended Design Year Selection (Traffic Volumes for Road Design)
40-2B	Measures of Effectiveness for Level of Service
40-3A	Legal Speed Limits
40-4A	Design Vehicle Dimensions
40-4B	Basic Dimensions of Design Vehicle (Combination Truck A)
40-4C	Basic Dimensions of Design Vehicle (Combination Truck B)
40-6A	3R/4R Systems
40-7A	Oversight Responsibility
40-8A	SDDCTEA Interstate Vertical Clearance Exception Coordination [Rev. Jul. 2014]
40-8B	Level One Controlling Criteria Checklist [Rev. Jul. 2014]
40-8C	Level One Design Exception Request [Rev. Jul. 2014]

CHAPTER 40

BASIC DESIGN CONTROLS

40-1.0 HIGHWAY SYSTEMS

40-1.01 Functional-Classification System

The functional classification concept is a determining factor in highway design. In this concept, each highway is grouped by the character of service it provides. Functional classification recognizes that the public-highway network serves two basic and often conflicting functions, access to property and travel mobility. Each highway or street will provide varying levels of access and mobility, depending upon its intended service. In the functional-classification scheme, the overall objective is that the highway system, if viewed in its entirety, will yield an optimum balance between its access and mobility purposes. If this objective is achieved, the benefits to the traveling public will be maximized.

The functional-classification system provides the framework for determining the geometric design of an individual highway or street. Once the function of the highway facility is defined, the designer can select an appropriate design speed, roadway width, roadside-safety elements, amenities, and other design values. Part V is based upon this systematic concept of determining highway design.

The Planning Division's Office of Highway Statistics has functionally classified each public highway and street. To design a project, it is necessary to determine the predicted functional class of the highway or street for the selected design year (e.g., 20 years beyond the project completion date). The functional classification of the facility is identified in the Engineer's Report prepared by the Office of Environmental Services. See Chapter 5.

40-1.01(01) Arterial

An arterial highway is characterized by a capacity to quickly move relatively a large volume of traffic and an often restricted function to serve abutting properties. The arterial system provides for high travel speed and the longest trip movements. A rural arterial provides connections between major urban areas and provides a level of service suitable for statewide or interstate travel. The rural-arterial system provides integrated, continuous movements without the need for stub connections.

In an urban area, the arterial system serves the major centers of activity within the urban area, carries the highest traffic volume and longest trip movements, and serves both major intra-city and through trips. The rural and urban arterial systems are connected to provide continuous through movements at approximately the same level of service.

The arterial functional classification is subdivided into principal and minor categories for rural and urban areas, as follows.

1. Principal Arterial. In a rural or urban area, the principal arterial provides the highest traffic volume and the greatest trip lengths. A principal arterial can be further subdivided as follows.

    a. Freeway. The freeway, which includes each Interstate highway, is the highest level of arterial. This type of facility is characterized by full control of access, high design speeds, and a high level of driver comfort and safety. For these reasons, a freeway is considered a special type of highway within the functional-classification system, and separate design criteria have been developed for it.

    b. Other Principal Arterial or Expressway. This type of facility may be 2 or 4 lanes, with or without a median. Partial control of access is desirable along this type of facility and, if a divided highway, this is termed an expressway. The level of geometric design is often equivalent to that of a freeway (e.g., 12-ft lane widths are required).

2. Minor Arterial. In a rural area, a minor arterial will provide a mix of interstate and interregional travel service. In an urban area, a minor arterial may carry local bus route and provide intra-community connections, but it will not, for example, penetrate a neighborhood. If compared to the principal arterial, the minor arterial provides lower travel speed, accommodates shorter trip lengths and lower traffic volume, but it provides more access to property.

40-1.01(02) Collector

A collector route is characterized by a roughly even distribution of its access and mobility functions. Traffic volume and speed will be somewhat lower than that for an arterial. In a rural area, a collector serves intra-regional needs and provides connections to the arterial system. All cities and towns within a region will be connected. In an urban area, a collector acts as an intermediate link between the arterial system and points of origin and destination. An urban

collector penetrates a residential neighborhood or commercial or industrial area. Local bus routes often include collector streets.

40-1.01(03) Local Road or Street

Each public road or street not classified as an arterial or collector is classified as a local road or street. A local road or street is characterized by its many points of direct access to adjacent properties and its relatively minor value in accommodating mobility. Speed and traffic volume are low and trip distances are short. Through traffic is often deliberately discouraged.

40-1.01(04) Recreational Road

A recreational road, which is a subset of the local-road system, provides access to a campground, park, boat-launching ramp, picnic area, or scenic or historic site. It is designed to protect and enhance the existing aesthetic, ecological, environmental, or cultural amenities that form the basis for distinguishing each recreational site or area. Because of its unique functional purpose, specific geometric design criteria have been developed for a recreational road. These are provided in Chapter 51.

40-1.02 Urban Design Subcategories by Type of Area

The functional-classification system is divided into urban and rural categories. However, an urban or rural designation may not be sufficiently specific to determine the appropriate project design, especially in an urban area. Therefore, the design criteria described for an urban project in Chapters 53 through 56 are further divided by the type of area where the project is located. This refinement to the highway-design process will allow the designer to tailor an urban project to the constraints of the surrounding environment.

Within an urbanized or urban area, the selection of design values will depend upon the design subcategory of the facility. A separate design is appropriate for a suburban, intermediate, or built-up classification. The following provides a description of the subcategories.

1. Suburban. This area is located at the fringe of an urbanized or small urban area. The predominant character of the surrounding environment is residential, but it may also include a considerable number of commercial establishments, especially strip development along a suburban arterial. There may also be at least one industrial park. The motorist has a significant degree of freedom but, nonetheless, must also devote attention to entering and exiting vehicles. Roadside development is characterized by low

to moderate density. Pedestrian activity may or may not be a significant design factor. Right of way is often available for roadway improvements.

Local and collector streets in a suburban area are located in a residential area, but may also serve a commercial area. The posted speed limit ranges from 30 to 50 mph. Most intersections will have stop or yield control, but there will be an occasional traffic signal. A suburban arterial will have strip commercial development and some residential properties. The posted speed limit ranges from 35 to 55 mph. There will be some signalized intersections along the arterial.

2. Intermediate. As its name implies, an intermediate area is classified between a suburban and a built-up area. The surrounding environment may be residential, commercial, or industrial, or a combination of these. The extent of roadside development will have a significant impact on the selected speeds of motorists. The increasing frequency of intersections is also a control on average travel speeds. Pedestrian activity has become a significant design consideration, and sidewalks and crosswalks at intersections are common. The available right of way will restrict the practical extent of roadway improvements.

   A local or collector street in an intermediate area has a posted speed limit ranging from 30 to 45 mph. The frequency of signalized intersections has increased substantially if compared to a suburban area. An arterial in an intermediate area will often have intensive commercial development along its roadside. The posted speed limit ranges from 35 to 50 mph. An arterial has a number of signalized intersections per mile.

3. Built-up. This refers to the central business district within an urbanized or small urban area. The roadside development has a high density and is often commercial. However, a substantial number of roads and streets in a built-up area pass through a high-density, residential environment (e.g., apartment complexes, row houses). Access to property is the primary function of the road network. Pedestrian considerations may be as important as vehicular considerations, especially at intersections. Right of way for roadway improvements is not available.

   Because of the high density of development in a built-up area, the distinction between the functional classifications becomes less important in considering signalization and speeds. The primary distinction among the three functional classifications is often the relative traffic volume and, therefore, the number of lanes. As many as half the intersections may be signalized. The posted speed limit ranges from 25 to 35 mph.

See Section 40-1.01 for definitions of the functional classifications.

40-1.03 Federal-Aid System

The Federal-aid system previously consisted of those routes which were eligible for categorical Federal highway funds. The Department, working with local governments and in cooperation with FHWA, designated the eligible routes. The criteria were based on the relative importance of the highway route and the anticipated functional classification 5 to 10 years in the future. United States Code, Title 23, described the applicable Federal criteria for establishing the Federal-aid system.

The Intermodal Surface Transportation Efficiency Act (ISTEA) of 1991 implemented a major realignment of the Federal-aid system. The system had been divided into Interstate, primary, secondary, and urban Federal-aid systems. Separate categories of Federal funds were available for eligible Federal-aid projects on each system. The following describes the Federal-aid system created by ISTEA.

40-1.03(01) National Highway System

The National Highway System (NHS) is a system of highways determined to have the greatest national importance to transportation, commerce, and defense in the United States. It consists of the Interstate highway system, logical additions to the Interstate system, selected other principal arterials, and other facilities which satisfy the requirements of one of the subsystems within the NHS. The National Highway System has been revised recently to include designated Intermodal Connectors which serve major ports, airports, public transportation and transit facilities, interstate bus terminals and rail and intermodal transportation facilities. Two Strategic Highway Network (STRAHNET) facilities have also been designated. The NHS represents approximately 4 to 5% of the total public-road mileage in the United States. Specifically, the NHS includes the following subsystems. A specific highway route may be on more than one subsystem.

1. Interstate System. The current Interstate highway system retains its separate identity within the NHS. There are provisions to add mileage to the existing Interstate subsystem.

2. Other Principal Arterials. These are highways in rural and urban areas which provide access between an arterial and a major port, airport, public transportation facility, or other intermodal transportation facility.

3. Strategic Highway Network. This is a network of highways which is important to the United States' strategic defense policy and which provide defense access, continuity, and emergency capabilities for defense purposes.

4. Major Strategic Highway Network Connectors. These are highways which provide access between major military installations and highways which are part of the Strategic Highway Network.

5. Intermodal Connectors. These are highways connecting NHS routes to major ports, airports, public transportation and transit facilities, interstate bus terminals, and rail or other intermodal transportation facilities.

Maps illustrating these routes and their locations are available and accessible on the Department's website at www.in.gov/indot/2350.htm.

The 1991 ISTEA mandated that the Department, in cooperation with other jurisdictional agencies, develop and implement transportation management systems. These include management systems for pavements, bridges, traffic congestion, highway safety, public transportation facilities and equipment, and intermodal transportation facilities or systems. Chapter 4 discusses INDOT's development of transportation management systems.

Local and military authorities should be consulted to verify the project traffic assignments (AADT), truck volume (% AADT commercial), and types of trucks that use the facility to ensure that the proper design vehicles are used for geometric design of the project.

40-1.03(02) Surface Transportation Program

The Surface Transportation Program (STP) is a block-grant type program that may be used by the State or a local agency for a road including an NHS facility that is not functionally classified as a local or rural minor collector. Such a road is referred to as a Federal-aid route. A bridge project funded through this program is not restricted to a Federal-aid route. A transit capital project is also eligible for Federal aid through the STP program.

40-1.03(03) Bridge Replacement and Rehabilitation Program

The Bridge Replacement and Rehabilitation Program (BRRP) has retained its separate identity within the Federal-aid program. BRRP funds are eligible for work on a bridge regardless of the road's functional classification.

40-1.04 Jurisdictional System

The State includes approximately 92,000 mi of public roads. The network has been divided into jurisdictional systems based on the organization or agency responsible for highway or street improvements and for maintenance.

40-1.04(01) State Highway System

The State highway system consists of all highways under the jurisdiction of the Indiana Department of Transportation. This system includes all Interstate highways, the Indiana Toll Road, the majority of the facilities on the National Highway System, and other State and U.S. routes not on the NHS. The State highway system consists of about 12%, or 11,350 mi, of all public roads and streets. These routes are the most important highways in the State, have the greatest traffic volume, and operate at the highest speeds.

40-1.04(02) County Road System

Each county government is responsible for all roads within its boundaries which are not on the State highway system, but is not responsible for the streets within incorporated cities or towns within the county. There are 66,078 mi of county-maintained roads in the State. In addition to the county-road system, each county is responsible for maintenance and improvements of bridges on city or town roads or streets. INDOT is responsible for administering Federal funds which are available for highway improvements on eligible county routes. The construction of a county-road bridge over a State or Interstate route is the responsibility of INDOT. The maintenance of such a bridge is the responsibility of INDOT. The maintenance of a bridge which carries a railroad over a road or street is the responsibility of the railroad company.

40-1.04(03) City or Town Street System

The city or town street system consists of all public streets within corporate limits except those on the State highway system. There are 14,519 mi of city- and town-maintained streets in the State. The extensions of these routes outside the corporate limits, but still within an urbanized or small urban area, are the responsibility of the county. INDOT is responsible for administering Federal funds which are available for highway improvements on eligible city or town streets.

40-1.04(04) DNR Recreational Roads

The Indiana Department of Natural Resources (IDNR) is responsible for maintaining roads within State public recreational areas. INDOT may be responsible for the design and construction of these facilities in cooperation with IDNR.

40-1.05 National Truck Network

The Surface Transportation Assistance Act (STAA) of 1982 required that the U.S. Secretary of Transportation, in cooperation with the Department, designate a national network of highways which allow the passage of trucks of specified minimum dimensions and weight. The objective of the STAA is to promote uniformity throughout the nation for legal truck sizes and weights on a National Truck Network. The Truck Network includes all Interstate highways and significant portions of the former Federal-aid primary system built to accommodate large-truck travel. The STAA requires that reasonable access be provided along other designated routes to the STAA commercial vehicles from the National Truck Network to terminals and to facilities for food, fuel, repair, and rest, and, for household-goods carriers, to points of loading and unloading.

Under State statute, each principal arterial is available to commercial vehicles with the dimensions authorized by the STAA, subject to local restrictions. The State has enacted legislation that stipulates that each public road is legally available to STAA vehicles, subject to local restrictions. The geometric-design criteria provided in the applicable Part V Chapters reflect the impact of the STAA vehicles on road design. For example, a 12-ft lane width is required for each highway on the National Truck Network.

Figure 40-1B provides the National Truck Network in Indiana. The National Truck Network is also available as a separate layer on the INDOT Roadway Inventory map at http://gis.in.gov/apps/DOT/RoadwayInventory/.

40-2.0 TRAFFIC-VOLUME CONTROLS

40-2.01 Definitions

1. Average Annual Daily Traffic (AADT). The total yearly volume in both directions of travel divided by the number of days in a year.

2. Average Daily Traffic (ADT). The calculation of average traffic volume in both directions of travel in a time period longer than one day and shorter than one year and divided by the number of days in that time period. Although incorrect, ADT is often used interchangeably with AADT.

3. Capacity. The maximum number of vehicles which can reasonably be expected to traverse a point or uniform section of a road during a given time period under prevailing roadway, traffic, and control conditions. The time period used for analysis is 15 min. Capacity corresponds to Level of Service E.

4. Delay. The primary performance measure on an interrupted-flow facility, especially at a signalized intersection. For this element, average stopped-time delay is measured, which is expressed in seconds per vehicle.

5. Density. The number of vehicles occupying a given length of lane, averaged over time. It is expressed as vehicles per mile per lane.

6. Design Hourly Volume (DHV). The 1-h volume in both directions of travel in the design year selected for determining the highway design. The DHV is the 30th highest hourly volume during the design year. For capacity analysis, the DHV is converted to an hourly flow rate based on the maximum 15-min flow rate during the design hour.

7. Service Flow Rate. The maximum hourly vehicular volume which can pass through a highway element at the selected level of service.

8. Directional Design Hourly Volume (DDHV). The 1-h volume in one direction of travel during the design hour in the selected design year.

9. Directional Distribution (D). The division, by percent, of the traffic in each direction of travel during the design hour or day.

10. Level of Service (LOS). A qualitative concept which has been developed to characterize an acceptable degree of congestion as perceived by the motorist. In the *Highway*

Capacity Manual, the qualitative descriptions of each level of service (A to F) have been converted into quantitative measures for the capacity analysis for each highway element as follows:

a. freeway mainline;
b. freeway mainline ramp junction;
c. freeway weaving area;
d. interchange ramp;
e. 2-lane, 2-way rural highway;
f. rural highway of 4 or more lanes;
g. signalized intersection;
h. unsignalized intersection; and
i. urban or suburban arterial.

Chapters 53 through 56 provide guidelines for selecting the level of service for capacity analysis in road design.

11. Peak-Hour Factor (PHF). A ratio of the volume occurring during the peak hour to the maximum rate of flow during a given time period within the peak hour, typically, 15 min.

12. Percent Trucks (T). A factor which reflects the percentage of heavy vehicles (trucks, buses, and recreational vehicles) in the traffic stream during the design hour or day. For geometric design and capacity analysis, a truck is defined as a vehicle with six or more tires. Data on trucks are compiled and reported by the Planning Division's Traffic Monitoring Team.

13. Rate of Flow. The equivalent hourly rate at which vehicles pass over a given point or section of a lane or roadway during a given time interval of less than one hour, typically, 15 min.

40-2.02 Design Year Selection

40-2.02(01) Roadway Design

A highway should be designed to accommodate the traffic volume expected to occur within the life of the facility under reasonable maintenance. This involves projecting the traffic conditions for a selected future year. The recommended design year is provided in Figure 40-2A. The design year is measured from the expected letting date for construction. Future traffic volume for each State highway is provided by the Planning Division's Traffic Monitoring Team.

40-2.02(02) Other Highway Elements

The following provides the recommended criteria for consideration of a design year for highway elements other than road design:

1. Bridge or Underpass. The structural life of a bridge may be 50 years or more. For a new bridge, including a bridge replacement, the initial clear-roadway width of the bridge or underpass will be based on the 20-year traffic-volume projection beyond the original projected letting date for construction.

   A bridge-rehabilitation project is that for which a significant amount of the existing substructure or superstructure will remain in place. For a bridge-rehabilitation project which includes significant improvements to all or part of the superstructure including full bridge-deck replacement, the clear-roadway width will be based on the 20-year traffic-volume projection beyond the original projected letting date for construction. A project which includes a bridge-deck overlay may be based on the 10-year projected traffic volume. For a bridge-rehabilitation project which includes only improvements to the substructure, the bridge will be evaluated as an existing bridge to remain in place. See Chapters 53 through 56 for specific criteria.

2. Right-of-Way Grading. The designer should consider potential right-of-way needs for the anticipated long-term corridor growth for a year considerably beyond that used for roadway design. No specific design year is recommended. However, in selecting an initial median width on a divided highway, for example, the designer should evaluate the potential need for future expansion of the facility to add through travel lanes. Other examples include potential future interchanges and potential conversion of a 2-lane, 2-way facility to a divided highway of 4 or more lanes.

3. Drainage Design. Drainage appurtenances are designed to accommodate a flow rate based on a specific design year or frequency of occurrence. The selected design year or frequency will be based on the functional classification of the facility and the specific drainage appurtenance (e.g., culvert). Chapter 29 provides the Department's criteria for selecting a design year for drainage.

4. Pavement Design. The pavement structure is designed to withstand the vehicular loads it will sustain during the design analysis period without appearing below selected terminal pavement serviceability. Chapter 52 provides the Department's criteria for selecting a design year for pavement design.

40-2.03 Design-Hourly-Volume Selection

For most geometric design elements which are impacted by traffic volume, the peaking characteristics are most significant. The highway facility should be able to accommodate the design hourly volume (adjusted for the peak-hour factor) at the selected level of service. This design hourly volume (DHV) will affect many design elements including the number of travel lanes, lane and shoulder widths, and intersection geometrics. The designer should also analyze the proposed design using morning and evening DHVs separately. This can have an impact on the geometric design of the highway.

The 30th highest hourly volume in the selected design year will be used to determine the DHV for design purposes.

40-2.04 Capacity Analysis

40-2.04(01) Objective

The highway mainline, intersection, or interchange should be designed to accommodate the selected design hourly volume (DHV) at the selected level of service (LOS). This may involve adjusting highway factors which affect capacity until a design is found that will accommodate the DHV. The detailed calculations, factors, and methodologies are provided in the *Highway Capacity Manual* (*HCM*). Chapter 41 provides additional information which the Department has adopted for the use of the *HCM*. The service flow rate of the facility is calculated. Capacity assumes a LOS of E. Service flow rate is the maximum volume of traffic that a proposed highway of given geometrics is able to serve without the degree of congestion appearing below a preselected LOS. This is always higher than a LOS of E.

The *HCM* has established measures of effectiveness for the level-of-service definition for each highway element for each type of highway facility. These are provided in Figure 40-2B. For each measure, the *HCM* will provide the analytical tools required to calculate the numerical value.

The following provides the simplified procedure for conducting a capacity analysis for the highway mainline.

1. Select the design year (Section 40-2.02).

2. Determine the DHV (Section 40-2.03).

3. Select the Level of Service (Chapters 53 through 56).

4. Document the proposed highway geometric design (lane width, clearance to obstructions, length of weaving section, number and width of approach lanes at an intersection, etc.).

5. Using the *HCM*, analyze the capacity of the highway element for the proposed design as follows:

    a. determine the maximum flow rate under ideal conditions;

    b. adjust the maximum flow rate for prevailing roadway, traffic, and control conditions; and

    c. calculate the service flow rate for the selected level of service.

6. Compare the calculated service flow rate to the DHV. If the DHV is less than or equal to the service flow rate, the proposed design will satisfy the objectives of the capacity analysis. If the DHV exceeds the service flow rate, the proposed design will be inadequate. The designer should either adjust the highway design or should adjust one of the capacity elements (e.g., the selected design year or the level-of-service goal).

40-2.04(02) Responsibility

For a State highway project, the Office of Environmental Services or its consultant is responsible for performing the required capacity analysis.

For a consultant-designed project on a non-State highway, the capacity analysis may be performed by either the local jurisdiction or the consultant.

40-3.0 SPEED

40-3.01 Definitions

1. Design Speed. Design speed is the maximum safe speed that can be maintained over a specified section of highway if conditions are so favorable that the design features of the highway govern. A design speed is selected for each project which will establish criteria

for design elements including horizontal and vertical curvature, superelevation, and sight distance. Section 40-3.02 discusses the selection of design speed. Chapter 53 provides specific design-speed criteria for a new construction or reconstruction project. Chapters 54 through 56 provide the design-speed criteria for a project on an existing highway.

2. Low Speed. For geometric design purposes, low speed is defined as 45 mph or lower.

3. High Speed. For geometric design purposes, high speed is defined as 50 mph or higher.

4. Average Running Speed. Running speed is the average speed of a vehicle over a specified section of highway. It is equal to the distance traveled divided by the running time (the time the vehicle is in motion). The average running speed is the distance summation for all vehicles divided by the running time summation for all vehicles.

5. Average Travel Speed. Average travel speed is the distance summation for all vehicles divided by the total time summation for all vehicles. Average running speed includes only the time the vehicle is in motion. Therefore, on an uninterrupted-flow facility which is not congested, average running speed and average travel speed are equal.

6. Operating Speed. Operating speed, as defined by AASHTO, is the highest overall speed at which a motorist can safely travel a given highway under favorable weather conditions and prevailing traffic conditions while at no time exceeding the design speed. Therefore, for low-volume conditions, operating speed equals design speed. This term has little or no usage in geometric design.

7. 85th-Percentile Speed. The 85th-percentile speed is the speed below which 85 percent of vehicles travel on a given highway. The most common application of the value is its use as one of the factors for determining the posted, regulatory speed limit of a highway section. Field measurements for the 85th-percentile speed will be conducted during off-peak hours when motorists are free to select their desired speed.

8. Posted Speed Limit. If needed, the INDOT district Office of Traffic conducts the traffic engineering studies on the State highway system to select a posted speed limit. If a study is performed, on either the State or local system, the posted speed limit is based on the following:

   a. the 85th-percentile speed;

   b. the design speed used during project design;

c. road-surface characteristics, shoulder condition, grade, alignment, and sight distance;

d. functional classification and type of area;

e. type and density of roadside development;

f. accident experience during the previous 12 months; and

g. parking practices and pedestrian activity.

On a new-construction or reconstruction project, the posted speed limit will be equal to the design speed used in design, if this does not exceed the legal speed limit. A traffic engineering study may be conducted to assist in the determination of the posted speed limit. This procedure applies to either a State or non-State facility.

9. Legal Speed Limit. The legal speed limit is that set by the Indiana Statutes which applies to a public road which does not have a posted speed limit. Section 40-3.02 provides legal speed limits adopted by the State of Indiana. An advisory speed sign is not a regulatory sign. Hence, it are meaningless for determining the posted speed limit.

40-3.02 Design-Speed Selection

40-3.02(01) Geometric Design Considerations

From a geometric design perspective, the selected design speed is based on the following design elements.

1. Functional Classification. A facility regarded as more important is designed with a higher design speed than a facility regarded as less important.

2. Urban or Rural. The design speed in a rural area is higher than that in an urban area. This is consistent with the likelihood of fewer constraints occurring in a rural area (e.g., less development).

3. Terrain. The flatter the terrain, the higher the selected design speed will be. This is consistent with the expected higher construction cost as the terrain becomes more rugged.

4. Traffic Volume. Design speed can vary by traffic volume. As traffic volume increases, a higher design speed is used. For example, the design speed on a rural collector varies according to traffic volume.

5. Project Scope of Work. A higher design speed is more applicable to a new-construction or reconstruction project than to a 3R project.

For geometric design application, the relationship between these road-design elements and the selected design speed reflects cost-effective considerations. For example, the higher the traffic volume, the more benefit to the traveling public from a higher design speed.

40-3.02(02) Regulatory Speed vs. Design Speed

Each public road is controlled by a regulatory speed limit, either through posted speed-limit signs or with a legal speed limit established in the State statutes; see Section 40-3.02(03). The following summarizes the relationship between the project design speed and the regulatory speed limit.

1. General. The design speed should equal or exceed the anticipated posted speed limit after construction, or the State legal speed limit for a non-posted highway.

2. Non-Posted Rural Facility. The maximum legal speed limit is 55 mph. A project on such a facility must be designed for 55 mph, or a traffic engineering study must be conducted to determine if a lower design speed is appropriate. If the project is designed for a lower speed than 55 mph, the road must be posted at the selected design speed between logical termini.

3. Non-Posted Urban Facility. The maximum legal speed limits, and corresponding minimum design speeds, are as follows:

   a. on a State highway, maximum legal speed limit 30 mph, minimum design speed 30 mph; and
   b. on a non-State highway, maximum legal daytime speed limit 55 mph, maximum legal nighttime speed limit 50 mph, minimum design speed 55 mph.

   As in a rural area, the minimum design speed must satisfy these criteria, unless a traffic engineering study indicates otherwise.

To avoid a potential conflict, the Office of Environmental Services should, early in project development, coordinate the design-speed selection with the district Office of Traffic to assist in establishing the anticipated posted speed limit of the completed facility. If the proposed design speed from the Geometric Design Tables is less than the established posted speed limit, one of the determinations must be made as follows:

1. increase the design speed to equal or exceed the established or anticipated posted speed limit; or

2. seek a design exception for the individual geometric design element (e.g., a horizontal curve) which does not satisfy the established-speed-limit requirement.

40-3.02(03) Legal Speed Limit

The legal speed limits established by the State statutes are summarized below. Figure 40-3A provides the legal speed limits for a non-Interstate facility.

1. Maximum Speed Limit. IC 9-21-5-2 and IC 9-21-5-6 set maximum speed limits which apply to vehicular speeds for all public roads. These maximum limits do not establish upper limits for geometric design speeds. The speed limits are as follows:

    a. 70 mph on an Interstate route outside an urbanized area;

    b. 65 mph on an Interstate route outside an urbanized area for a vehicle other than a bus having a gross weight greater than 26,000 lb;

    c. 60 mph on a rural facility of 4 or more lanes;

    d. 55 mph on a rural facility of 2 lanes;

    e. 55 mph on an Interstate route inside an urbanized area;

    f. 30 mph on a State highway in an urban area *;

    g. 30 mph on a non-State highway in an urban area, with maximums of 55 mph daytime, and 50 mph nighttime *; and

    d. 15 mph in an alley, with a maximum of 30 mph *.

* Requires an engineering and traffic investigation study to establish a maximum speed limit that is different from the value shown.

2. Minimum Speed Limit (Non-State Facility). IC 9-21-5-6 of the Statutes sets minimum speed limits which apply to a non-State facility which is not posted with a regulatory speed-limit sign. The speed limits are as follows.

   a. Rural Area. 30 mph, except as shown in Item 2.c. below **.

   b. Urban Area. 20 mph, except as shown in Items 2.c. and 2.d. below **.

   c. School Zone. A local authority may establish a speed limit within a school zone if the following conditions are satisfied.

      (1) The limit is not lower than 20 mph.

      (2) The limit is imposed only in the immediate vicinity of the school.

      (3) Children are present.

      (4) The speed zone is properly signed.

      (5) The Department has been notified by certified mail of the limit imposed.

   d. Park or Playground. A local authority may decrease the speed limit on an urban street to not lower than 15 mph, if the following conditions exist.

      (1) The street is located within a park or playground established under IC 36-10.

      (2) The: boards established under IC 36-10-3 or IC 36-10-4, or the park authority established under IC 36-10-5 requests the local authority to decrease the limit.

      (3) The speed zone is properly signed.

   e. Alley. 5 mph **.

** Requires an engineering and traffic investigation study to establish a speed limit that is below the maximum. However, the lower limit can not be lower than the minimum value shown.

40-4.0 VEHICULAR CHARACTERISTICS

The physical and operational characteristics of vehicles using the highway are important controls in geometric design. These will vary according to the type of vehicle being considered. If a highway facility or intersection is being designed, the largest design vehicle likely to use that facility with considerable frequency should be used to determine the selected design values. See Chapter 46 for design-vehicle selection at an intersection.

Figure 40-4A provides information on dimensions for the standard design vehicles. Figures 40-4B and 40-4C provide illustrations for two combination trucks for application of the basic dimensions.

40-5.0 ACCESS-CONTROL DEFINITIONS

Access control is defined as the condition where a public authority fully or partially controls the right of abutting owners to have access to and from the public highway. The functional classification of a highway is partially determined by the degree of access it allows. Access control may be exercised by statute, zoning, right of way purchases, drive controls and permits, turning and parking regulations, or geometric design (e.g., grade separation or frontage road).

The definitions of the types of access control are as follows.

1. Full Control. Full control of access is achieved by giving priority to through traffic by providing access only at interchanges with selected public roads. At-grade crossings or drive connections are not allowed. This type of facility is termed a freeway. Full control of access maximizes the capacity, safety, and vehicular speeds on the freeway.

2. Partial Control. Partial control of access is an intermediate level between full control and no control. Priority is given to through traffic, but some at-grade intersections and drive connections are allowed. The proper selection and spacing of at-grade intersections and service connections will provide a balance between the mobility, safety, and access service of the highway. This type of facility is termed an expressway.

3. No Control. The use of the term *no* is actually a misnomer. Each highway warrants some degree of access control by permit or by design. If access points to other public roads and drives are properly spaced and designed, the adverse effects on highway capacity and safety will be minimized. These points should be located where they can best suit the traffic and land-use characteristics of the highway being designed. Their design should enable a vehicle to enter and exit safely with a minimum of interference to through traffic. Access control is exercised by the Department on a State highway or by a local jurisdiction on a non-State facility to determine where private interests may have access to and from the public-road system.

The designer should reference the following for more information on access-control regulations and design guidelines.

1. INDOT *Driveway Permit Handbook.*

2. Indiana Local Technical Assistance Program (LTAP) *Access Control for Local Roads and Streets in Small Cities and Rural Areas*.

3. INDOT *Right-of-Way Engineering Procedures Manual*.

4. INDOT *Standard Drawings*.

5. *Indiana Design Manual* Sections 46-8.0, 48-6.06, 48-1.03, and Chapter 86.

40-6.0 PROJECT SCOPE OF WORK

The project scope of work will reflect the basic intent of the highway project and will determine the overall level of highway improvement. This decision will determine which criteria in this Part will apply to the geometric design of the project.

40-6.01 Definitions

40-6.01(01) New Construction

New construction is defined as horizontal and vertical alignment in a new location. An intersection or interchange which appears within the project limits of a new highway mainline or is relocated to a new point of intersection is considered new construction. Chapters 41 through 53 provide the Department's criteria for new construction.

40-6.01(02) Complete Reconstruction, Freeway

Complete reconstruction of an existing freeway is defined as replacement of the existing facility. Complete reconstruction results in significant improvements to the freeway's level of service, operational efficiency, and safety. Because of the significant level of work, Chapters 41 through 53 will apply to the design of a complete reconstruction project.

40-6.01(03) Partial Reconstruction (4R), Freeway

Partial reconstruction (4R) of an existing freeway is defined as work which includes one or more of the following improvements.

1. Over 30% of the travelway pavement area must be removed and replaced. Pavement rubblization with an overlay is considered to be one form of pavement removal and replacement.

2. A concrete overlay of at least 6 in., or an asphalt overlay of 8 in. or greater as measured at the point of greatest thickness over the existing travelway, is required.

3. The facility cannot adequately accommodate the current or projected (10-year) traffic demand and additional lanes are necessary.

4. Major revisions are necessary to the existing horizontal and vertical alignment requiring that over 30% of the travelway pavement must be replaced.

5. Bridge replacement or total bridge-deck replacement is required.

6. Bridge-deck widening is necessary due to added travel lanes on the approach.

7. Interchange upgrading is required to satisfy current and projected (20-year) traffic demands.

A partial 4R freeway project is to be designed in accordance with Chapter 54.

40-6.01(04) Reconstruction (4R), Non-Freeway

Reconstruction of an existing highway mainline includes the addition of travel lanes or major revisions to the existing horizontal and vertical alignment or reconstruction of a significant portion of the existing pavement structure. However, the highway will remain essentially within the existing corridor. The project may require right-of-way acquisition. A 4R project is undertaken because one or more of the following conditions exist along the highway.

1. Over 30% of the pavement area in the traveled way must be removed and replaced.

2. A concrete overlay of at least 6 in., or an asphalt overlay of 8 in. or greater as measured at the point of greatest thickness over the existing travelway, is required.

3. The facility cannot adequately accommodate its current or projected (10-year) traffic demand and additional lanes are necessary.

4. Major revisions are necessary to the existing horizontal and vertical alignment requiring more than 30% of the traveled way to be replaced.

5. Bridge replacement or total bridge-deck replacement is required.

6. Bridge-deck widening is necessary due to added travel lanes on the approach.

7. Major interchange upgrading is necessary to satisfy current and projected (20-year) traffic demands at an acceptable level of service. However, an analysis may determine that interim improvements are cost effective.

7. Work planned on adjoining sections of the highway involves reconstruction for an appreciable length of the highway requiring reconstruction to achieve roadway-design consistency along the route between logical termini.

The final decision on selecting a 4R scope of work will be made based on the Department's long-range plans for upgrading the State's highway system. See Section 40-6.02 for more information.

Because of the significant level of work for reconstruction, the design will be based on the criteria for new construction. Therefore, Chapters 41 through 53 will apply to a reconstruction (4R) project.

An added-travel-lanes project should be classified as a 4R project.

40-6.01(05) 3R Project, Freeways

A 3R project (resurfacing, restoration, rehabilitation) on an existing freeway is intended to extend the service life of the existing facility and to enhance highway safety. A 3R project should make cost-effective improvements to the existing geometrics where practical. Right of way acquisition is rarely necessary. Improvements include the following:

1. pavement resurfacing;

2. full-depth pavement reconstruction, if the reconstructed pavement area is 30% or less of the traveled way;

3. widening existing travel lanes or shoulders;

4. upgrading the structural strength of shoulders;

5. improving the superelevation of existing horizontal curves;

6. adding an auxiliary lane;

7. improving roadway delineation;

8. upgrading roadside safety;

9. increasing the length of acceleration and deceleration lanes at an interchange;

10. widening an existing bridge as part of a bridge-reconstruction project;

11. upgrading or replacing bridge railing;

12. overlaying a bridge deck;

13. preservation of bridge substructure;

14. improving roadside drainage;

15. widening an existing ramp;

16. flattening a horizontal or vertical curve; or

17. increasing the vertical clearance at an underpass.

Chapter 54 provides the criteria for the design of a 3R freeway project.

40-6.01(06) 3R Project, Non-Freeway

A 3R project (rehabilitation, restoration, resurfacing) on an existing non-freeway is intended to extend the service life of the existing facility and to enhance highway safety. A 3R project should make cost-effective improvements to the existing geometrics, where practical. A 3R project on the mainline or at an intersection is work on the existing alignment. Minimal right of way acquisition may be required. Improvements include the following:

1. pavement resurfacing or rehabilitation or a limited amount of pavement reconstruction (30% or less of the traveled way area);

2. bridge rehabilitation or replacement;

3. lane or shoulder widening;

4. upgrading the structural strength of shoulders;

5. flattening a horizontal or vertical curve;

6. adjustment to the roadside clear zone;

7. flattening side slopes;

8. converting an existing median to a 2-way left-turn lane;

9. adding a truck-climbing lane;

10. converting an uncurbed urban street into a curbed street;

11. revising the location, spacing, or design of an existing drive along the mainline;

12. adding or removing a parking lane;

13. bridge widening and associated substructure work to accommodate the widening;

14. bridge railing upgrading or replacement;

15. bridge-deck overlay;

16. work to preserve the bridge substructure;

17. adding sidewalks;

18. relocating utility poles;

19. upgrading guardrail or other safety appurtenances to satisfy current criteria;

20. other geometric or safety improvements to an existing bridge;

21. drainage improvements;

22. increasing vertical clearance at an underpass;

23. intersection improvement (e.g., adding turn lanes, flattening turning radii, channelization, corner sight-distance improvements, etc.);

24. adding new or upgrading traffic signals; or

25. other spot improvements.

Specifically related to the level of pavement improvement, the following definitions apply.

1. Resurfacing. Resurfacing consists of the placement of additional surface material over the existing restored or rehabilitated roadway or structure to improve serviceability or to provide additional strength.

2. Restoration or Rehabilitation. Restoration or rehabilitation is defined as work required to return the existing pavement to a condition of adequate structural support or to a condition adequate for the placement of an additional stage of construction. This can include milling the existing pavement.

Chapter 55 provides the criteria for the design of a 3R non-freeway project.

40-6.01(07) Partial 3R Project

A partial 3R project is intended to extend the service life of the pavement and, where practical, to enhance highway safety. Geometric design improvements are included to correct obvious deficiencies on the existing highway. Right of way acquisition is rarely involved. Partial 3R improvements include the following:

1. pavement resurfacing;
2. lane or shoulder widening;
3. adjustments to the roadside clear zone;
4. relocating utility poles;
5. upgrading guardrail or other safety appurtenances to satisfy current criteria;
6. correcting a high-accident locations;
7. drainage improvements; or
8. improving superelevation to the extent practical.

Chapter 56 provides the criteria for the design of a partial 3R project. The only partial 3R treatment permitted on an NHS route is preventative maintenance. All types of partial 3R treatments are permitted on a non-NHS route. Chapter 52 provides pavement-design criteria for each type of project.

40-6.01(08) High-Accident-Location Improvement, Non-Freeways

1. Non-NHS Route. This type of project is intended to make improvements to correct a safety problem at a location that is identified through the FHWA-approved INDOT Safety Improvement Program process, which applies to either a State or local facility. It is not intended to provide a general upgrading of the highway, as is a project categorized as new construction or reconstruction, or 3R. No specific design criteria for this type of improvement are described herein. The objective is to rapidly correct an identified accident hazard using the highest level of design criteria as practical at the site considering existing site limitations (e.g., right-of-way restrictions).

2. NHS Route. A high-accident-location improvement must satisfy the appropriate criteria, or a design exception must be obtained. This is also identified through the FHWA-approved INDOT Safety Improvement Process. However, the design criteria to be used are those for new construction or reconstruction, or 3R, based on the criteria described in Section 40-6.02(01).

40-6.01(09) Traffic-Control-Devices Project

A traffic-control-devices project is programmed specifically to install, replace, or remove signs, pavement markings, traffic signals, highway lighting, etc. No other work is included, except that a traffic-signal project will include curb ramps at each involved intersection. Part VII provides the criteria for the installation of traffic-control devices on a freeway or a non-freeway.

40-6.02 Application

40-6.02(01) National Highway System (NHS) Project

For long-range transportation planning purposes, INDOT has evaluated the State highway system to determine which routes warrant reconstruction or 4R, and which routes warrant a 3R-type improvement. Figure 40-6A provides a map of the State highway system to indicate 3R and 4R routes. The project scope of work definitions in Section 40-6.01 will apply to each project on the NHS. The following will apply to the use of Figure 40-6A for a 3R or 4R route on the NHS.

1. General. The factors that determine if a project should be classified as 3R or 4R are as follows.

    a. If 70% or more of the existing traveled-way pavement area can be retained and resurfaced, the project can be classified as 3R. If not, the project should be classified as 4R.

    b. An assessment of the level of service (LOS) for the 10-year traffic volume projection can determine if the project is 3R or 4R, based upon the expected service life of the pavement.

    Other factors should also be considered in making the project scope of work determination (e.g., accident rates).

2. Freeway. A freeway project will be classified as new construction, complete reconstruction, partial reconstruction, or 3R. See Section 40-6.01 for definitions.

3. 4R Non-Freeway Route. Environmental Policy Team or the local jurisdictional agency will determine the level of service (LOS) for the 10-year traffic volume projections based on the discussion in Section 40-2.0. If this is LOS of D or better, it will be acceptable to design the project using the 3R geometric-design criteria shown in Chapter 55. If the

projected LOS will not satisfy D, the facility will be designed according to the criteria for new construction or reconstruction. A bridge replacement, bridge-deck replacement, or bridge widening should be designed to satisfy 4R criteria.

4. 3R Non-Freeway Route. The project will be designed according to the 3R geometric-design criteria shown in Chapter 55. However, consideration should be given to using the 4R criteria.

5. 3R Project. If the 3R project scope of work is selected, costly items (e.g., bridge reconstruction or replacement, alignment corrections), which have a long service life and can be incorporated into a future 4R project, should be constructed to satisfy 4R design criteria as part of the 3R project.

6. Combination Project. If a project will include both 3R and 4R work, the overall project scope of work classification should be based on the predominant type of work. For example, a 6-mi resurfacing project which includes the replacement of a mainline bridge to 4R criteria should be classified as a 3R project, unless the bridge is considered to be a major structure and its replacement cost is equal to or greater than that of the 3R roadway work.

7. S-Line. Each S-line should be individually evaluated to determine the appropriate design criteria (4R or 3R) based on the factors described herein if it is on the NHS, or Section 40-6.02(02) if it is not on the NHS.

   If an S-line is designed to 3R criteria, the intersection sight distance must be determined based on the 4R criteria described in Section 46-10.0.

The requirements described herein must be used to design each NHS project regardless of the funding source, whether Federal, State, or local-agency funds are used. However, the values shown in the AASHTO *Policy on Geometric Design of Highways and Streets* may be used as minimum values if they are lower than similar values shown herein where restricted conditions warrant.

40-6.02(02) Non-NHS Project

The project scope of work definitions in Sections 40-6.01 and 40-6.02(01) and Figure 40-6A are intended only as guidance for a non-NHS project. The decision of classifying a project that is not on the NHS should be made based on the future plans of the jurisdictional highway agency for the entire route between logical termini for the foreseeable future (20 years). The future

plans for a route must consider current and projected traffic volumes, anticipated land use, and accident experience. The following are examples of applying this concept to a non-NHS project.

1. Example One. Approximately 60% of the pavement on a 6-mi section of a county road will be replaced. The remainder of the pavement is in reasonably good condition and requires only milling and resurfacing. The 6-mi section is part of a 30-mi county route which is the main highway between two small towns. The existing road has a LOS of A, and it is anticipated to provide a LOS of B based on 20-year projected traffic volume. There is no adverse accident experience for the last three years. Based on this information, a highway agency could decide to designate the 3R classification and construct the road to 3R design criteria. This is acceptable, though more than 30% of the pavement is being completely replaced.

2. Example Two. Approximately 40% of the pavement on a 6-mi section of county road will be replaced. The remainder of the segment will be resurfaced. This segment of road is part of a 25-mi county route which connects two small towns. This county road is located approximately 20 mi from a major metropolitan area. It is anticipated that, within the next 20 years, there will be considerable residential and commercial development adjacent to this portion of the county road because of its proximity to the rapidly-expanding metropolitan area. The current LOS is B, but projected traffic volume indicates that the LOS will drop to D in 10 years and to F in 20 years. The highway agency has two options. It could decide to design the project to 3R criteria for the present and, then, undertake a 4R project in 10 years once the pavement is likely in need of major work. Its second option is to construct the project to 4R criteria now to satisfy future traffic demands.

3. Example Three. A 6-mi section of highway, which is located on INDOT's 3R highway system, requires complete pavement replacement because of poor drainage. The Central Office has rechecked the status of this highway with the district office and has verified that there are no plans for work on the remainder of this route in the future (20 years) except for 3R-type work. The current LOS is B, and it is anticipated to remain at B for the next 20 years. There is no adverse accident experience and no anticipated major land development along the route. INDOT can decide to design the project to 3R design criteria, even though all pavement is being replaced.

4. Example Four. A 200-ft bridge on the State's 3R system requires complete replacement. There are sharp horizontal curves on each end of the bridge where numerous accidents have occurred during the last three years. It has been decided to correct the poor alignment on the bridge approaches and to construct the approaches and bridge on a new location. The total length of the project is 1.5 mi. The Central Office has discussed the

status of this site with the district office, and both have agreed that it should remain on the 3R system. The current LOS is B, and it is estimated that the LOS will be C in 20 years. There are no plans except to perform 3R-type work to the remainder of the road in the future (20 years). INDOT can decide to design the entire project to 3R criteria.

5. Example Five. A 6-mi segment of a route on INDOT's 3R system requires replacing 20% of the pavement and resurfacing the remaining 80%. The current LOS is D and will deteriorate to E in 5 years. There is rapid residential, commercial, and industrial development in the area. The Central Office and the district office agree that the entire route was properly classified as a 3R route. However, this one 6-mi segment is an exception because rapid growth adjacent to it is expected to occur. The appropriate solution is to upgrade the facility to accommodate anticipated traffic demand for the next 20 years and to design the project to 4R criteria.

40-6.02(03) Procedures

For an INDOT project, the scope of work is selected based on the following procedure.

1. The district office initially identifies the project scope.

2. The project is programmed based on the project scope determined by the district.

3. The Office of Environmental Services will make the final decision on the scope of work. However, for each NHS project which has an estimated construction cost exceeding $1 million, FHWA will meet with representatives of the Office of Environmental Services to cooperatively agree on the project classification and whether it should not be exempt from FHWA oversight. This will occur as early in the project scoping process as possible, so that FHWA can have input on each project which is subject to its oversight. The meeting will be held as soon as an initial concept for the project design has been developed. The results, including classification and oversight determination, will be documented in the Engineer's Report. The cover of the report will indicate whether the project is exempt or not exempt from FHWA oversight.

4. The Production Management Division, during project design, may re-evaluate the project scope and request the Office of Environmental Services to modify the scope of work.

For a Federal-aid project not on the State highway system, the project scope of work determination will be based on the future plans of the local agency for improvements to its local road or street system. The philosophy provided in Section 55-2.01(02) Item 2 should be applied

to a local project. The local agency must submit a letter to the Planning Division to document the local agency's plans for that facility in the foreseeable future.

If the project is on the NHS and the estimated construction cost exceeds $1 million, the Planning Division will schedule a meeting with the local agency and FHWA to agree upon a project classification (3R or 4R). This meeting should occur early in the scoping process so that FHWA can have input on each project that is subject to its oversight.

40-7.0 FHWA INVOLVEMENT

The 1991 *Intermodal Surface Transportation Efficiency Act* (ISTEA), and the National Highway System Act of 1995, in addition to a realignment of the Federal-aid system, revised the role of the Federal Highway Administration for each project. The Transportation Efficiency Act for the 21st Century (TEA-21) of 1998, further revised the role of FHWA for each project as described below.

1. Highway System. FHWA oversight is required only on an Interstate-route project.

2. Project Scope of Work. FHWA oversight is required only on a new Interstate-route construction or reconstruction project.

3. Project Cost. FHWA oversight is required only on an Interstate-route project with an estimated construction cost exceeding $1 million.

The jointly-approved INDOT and FHWA *Stewardship and Oversight Agreement* provides the basis for the stewardship and oversight of FHWA for the use of Federal-aid funds by INDOT.

For a project with INDOT oversight, FHWA will not be involved with day-to-day project activities, including field reviews, design approval, public-hearing certification, design exceptions, PS&E submittal, etc. Such project is still subject to the FHWA Program and Process Review. However, each Federally-funded project will be designed in accordance with the appropriate criteria described herein, and the INDOT *Standard Specifications* and *Standard Drawings*, regardless of FHWA review.

The FHWA is not precluded from reviewing or investigating a phase of the Federal-aid program including control documents or a Federal-aid project, especially a project including a unique feature or unusual circumstance such as a special structure design, experimental feature, etc., for which it is desirable to have FHWA oversight. The oversight determination for each such

project will be made at the meeting discussed in Section 40-6.02(03), Item 3. INDOT and FHWA will meet to determine oversight responsibility as shown in Figure 40-7A.

40-8.0 ADHERENCE TO DESIGN CRITERIA [REV. FEB. 2014, REV JUL. 2014]

40-8.01 Department Intent [Rev. Jul. 2014]

The Department's intent is that all geometric design criteria described in this Part should be satisfied. This is intended to ensure that the Department will provide a highway system which satisfies the transportation needs of the State and provides a reasonable level of safety, comfort, and convenience for the traveling public.

Chapters 40 through 56 provide information on geometric design for application to each individual project. The values shown in AASHTO's *A Policy on Geometric Design of Highways and Streets* (the *Green Book*) may be used as minimum values without a design exception if they are lower than similar values shown herein. See Chapters 53 and 55 for specific exceptions.

A roadway functionally classified as collector or local road that has an average daily traffic volume of 400 vehicles per day or less may be designed using AASHTO's *Guildelines for Geometric Design of Very Low-Volume Local Roads (ADT ≤ 400)*.

AASHTO's *A Policy on Design Standards, Interstate System* is the minimum design criteria for interstates.

The designer is responsible for satisfying these criteria in the project design. However, this will not always be practical. In addition to crash history, designers should consider cross-section consistency as well as reasonable consistency in geometric alignment and sight distance along the corridor when considering a design exception. The Department's procedures for identifying, justifying, and processing exceptions to the geometric design criteria shown in chapters 40 through 56 are described below.

40-8.02 Hierarchy of Design Criteria

40-8.02(01) Level One [Rev. Feb. 2014]

Level One controlling design criteria are those highway design elements which are judged to be the most critical indicators of a highway's safety and its overall serviceability. Not all of the design information described in this Part qualifies as a Level One criterion. The Department and

FHWA have identified the following design elements as Level One. The formal documentation and approval process for a design exception or waiver described in Section 40-8.04 must be followed if these criteria are not satisfied.

1. design speed for mainline or interchange ramp *;
2. lane width;
3. shoulder width for uncurbed section or curb offset for curbed section;
4. bridge width for new, rehabilitated, or existing bridge to remain in place;
5. structural capacity for new, rehabilitated, or existing bridge to remain in place;
6. horizontal curvature, i.e., minimum radius;
7. superelevation-transition length;
8. application of stopping sight distance to a horizontal curve or a vertical curve;
9. maximum grade;
10. travel-lane cross slope;
11. superelevation rate;
12. minimum vertical clearance;
13. Americans with Disabilities Act (ADA) compliance **; and
14. bridge-railing safety performance criteria.

* An exception to design speed is not allowed. Instead, the designer will use the Department's applicable criteria for the project design speed and will, if needed, seek an exception to each individual design element which does not satisfy the design-speed requirement, e.g., a horizontal or vertical curve.

** Requires a determination of technical infeasibility. See Section 40-8.04(01).

It is not necessary to submit a Level One checklist for an S-line that does not exceed the work necessary to build the appropriate public-road approach, including the required taper distance to account for transitioning to the existing pavement width. This requirement does not relieve the designer of having the S-line satisfy all critical design elements in the area, i.e., maximum grade, vertical stopping sight distance, and intersection sight distance.

The existing minimum vertical clearance dimension for a structure carrying a roadway over a railroad should be field-measured. Standard track maintenance procedures performed by a railroad company often result in an increase in the rail elevation. Therefore, the minimum vertical clearance dimension shown on prior construction plans will not be a true indication of the current minimum vertical clearance. Each report or plan identifying the existing minimum vertical clearance dimension over a railroad should indicate the date of the field measurement. This dimension should be shown on the profile view of the General Plan sheet with a corresponding note identifying the date of the field measurement.

Each Level One criterion must be satisfied for the entire project length, including all paving exceptions. If a criterion is not satisfied, the designer must apply for a design exception or revise the plans.

The Level One Criteria Checklist is to be included with each submittal. If there are no changes to the plans from the previous submittal that affect the Level One criteria, it is permissible to copy the previous Checklist form and add a comment. The comment should indicate that there are no changes to the plans that affect Level One criteria. Such statement should be initialed and dated for the current submittal. A completed Limited Review Certification should be submitted at the Final Check Prints and Final Tracings stages. These forms are available at www.in.gov/dot/div/contracts/design/dmforms.

40-8.02(02) Level Two

Level Two design criteria are those which are judged to be important indicators of a highway's safety and serviceability, but are not considered as critical as the Level One criteria. If a Level Two criterion is not satisfied, the designer will document in the project file that the criterion has not been satisfied and will provide a brief rationale for not satisfying it. However, it is not necessary to prepare an in-depth documentation to justify the decision.

The brief rationale for a project's inaccordance with the intersection sight distance requirements should include the following:

1. design speed;

2. summarization of accident data for the most recent available 3-year period;

3. evaluation of the accident data which is related to intersection sight distance; and

4. approximate cost of accordance with the intersection sight distance requirements.

For a local-agency project, the local agency should furnish written concurrence with a decision not to improve the intersection sight distance to full accordance with the requirements. This concurrence may be in the form of a local elected official's signing off on the Level Two design exception, or a separate letter from the elected official.

The Level Two design criteria are as follows:

1. all roadside-safety design elements (see Chapter 49);

2. obstruction-free zone for a non-freeway 3R project;

3. median- or side-slope rate;

4. access control for a freeway or a freeway ramp intersection with a non-freeway facility;

5. intersection sight distance;

6. freeway acceleration lane length;

7. freeway deceleration lane length;

8. median width;

9. shoulder cross slope and rollover;

10. auxiliary lane or shoulder width on a non-freeway;

11. minimum grade for drainage;

12. minimum level-of-service criteria;

13. parking-lane width;

14. two-way left-turn lane width;

15. critical length of grade; and

16. truck SSD for specific application (see Section 42-1.0).

40-8.02(03) Level Three

Level Three includes the design criteria not listed in Level One or Two. No action is required if a Level Three criterion is not satisfied. However, the designer should informally notify his or her supervisor of the situation.

40-8.03 Design-Exception Process

The design-exception process will be applied as follows:

1. Project Scope of Work. The design exception process will apply to a new construction, reconstruction (4R), 3R or partial-reconstruction freeway, or 3R non-freeway project. The application of the design-exception process to a partial 3R project is discussed in Chapter 56. The design-exception requirements do not apply to a high-accident-location project on a non-NHS route because there are no specific design criteria. The design-exception process does not apply to a signing, pavement markings, traffic-signal installation, or traffic-barrier project which requires little or no roadway work.

   The design-exception process does not apply to a preventative maintenance project on the National Highway System. An exception is not required for the retention of an existing feature which does not satisfy INDOT criteria. In effect, INDOT is maintaining the project as built and as agreed to with FHWA in the project agreement. However, a new design feature which does not satisfy INDOT criteria created by the project, or existing ones made worse, must be addressed in an exception, because such action in effect changes the project as built. Preventative maintenance includes restoration and rehabilitation of specific elements of a highway facility if it can be demonstrated that such activities are a cost-effective means of extending the service life of the existing facility. Pavement preventative maintenance treatments are discussed in Section 304-6.04. Bridge preventative maintenance treatments are discussed in Section 72-1.04.

2. Federal-Aid Project on the National Highway System. A design element that does not satisfy the Level One criteria will be addressed as described in Section 40-8.04. For a Level Two design exception, the designer should inform FHWA of the exception if the project is not exempt from FHWA oversight.

3. State-Funded Project, FHWA-Oversight Exempt Project, or Project Not on the NHS. Each design element that does not satisfy the Level One criteria should be documented and approved as an INDOT exception. If a Level Two criterion will not be satisfied, the designer should document in the project file that the criterion has not been satisfied, and should provide a brief rationale.

4. Locally-Funded Project. The designer should document where the proposed design deviates from the criteria provided in this Part.

5. Signing and Dating the Design-Exception Request. For a Level One or Level Two design-exception request, the designer should sign and date the request. A consultant, if used, should also include the name of the consulting firm below the signer's name.

40-8.04 Procedure for Level One Design Exception [Rev. Jul. 2014]

The designer will not request an exception to the Level One design criteria until he/she has fully evaluated the impacts of the proposed design (i.e., the exception) and the associated impacts of fully satisfying the Level One criteria. The evaluation process should include obtaining comments from the applicable Divisions including the following:

1. Traffic Engineering Division;
2. Asset Management Division;
3. Pavement Division, Office of Geotechnical Engineering;
4. Real Estate Division
5. Utilities and Railroads Division;
6. Bridges Division, Office of Hydraulics;

After review by the applicable offices or teams, the design exception should then be routed in the order shown below for further comments, recommendations, and final action.

40-8.04(01) Department Procedure [Rev. Feb. 2014, Jul. 2014]

Each design element that does not satisfy the Level One controlling criteria will require a written design exception. This includes all paving exceptions, S-lines, and traffic maintenance phases. Multiple design elements may be included in a single design exception document; however, each design element must have its own approval cover letter. An editable version of s the design exception cover letter, Figure 40-8C, is available on the Department's website, at www.in.gov/dot/div/contracts/design/dmforms/.

A design exception for a local-agency project or a State project involving an element on a local agency's road must be signed by the local elected officials who have jurisdiction of the project or road prior to routing for review.

For new construction, reconstruction (4R) and 3R or partial-reconstruction (4R) freeway projects the design exception requirements are described in item 1.

For 3R Non-Freeway projects a streamlined design exception is used. The design exception requirements are described in item 2. The streamlined design exception is intended to document the satisfactory performance of existing design features. Retaining or replacing existing geometric design features in-kind may be appropriate when satisfactory performance is documented.

For all projects, an exception to the requirements of the Americans with Disabilities Act (ADA) requires a determination of technical infeasibility as described in item 3 below.

The design exception request must contain all of the necessary information or references without requiring the reviewer to obtain additional information (e.g., plan sheets, copies of pages of this Manual that pertain to the design exception request, or copies of pertinent pages of the AASHTO *Policy on Geometric Design of Highways and Streets*.)

1. Level One Criteria Design Exception for 4R, Partial 4R Freeway, and 3R Freeway project, The design exception will, at a minimum, address the following.

    a. Project Description. This includes project location, functional classification, description of work, and type of area (residential, commercial, rural, etc.) in which the project is located. The location of the design exception should be identified by referencing it to the nearest Department-maintained route or other major point such as a county line.

    b. Design Feature. This is a description of the design feature that does not satisfy the Department's criteria. Both the proposed criterion and the Department criterion should be identified, with respective design speeds where applicable. Drawings should be used to explain the criterion if necessary. The reason for the design exception request should be indicated.

    c. Construction Costs. This is the additional cost to construct the feature to satisfy the Department criterion. An abbreviated breakdown of the costs should be included.

    d. Project Design. This includes the basic design parameters of the project (e.g., current and projected 20-year traffic volumes, design speed, posted speed, percent trucks, design criteria, terrain, and access control).

e. Crash Analysis. In addition to furnishing the summary of crash history for the previous 3-year period, the crash data must be presented as follows. For a new roadway, see item h., Safety.

1) It should be summarized and described in general terms (e.g., type, severity, contributing circumstances).

2) All available sources (city, county, and state police) must be contacted to obtain the data and be identified in the design exception request. For INDOT projects, crash history is available through the Automated Reporting Information Exchange System (ARIES), which is the Web portal to the Indiana Vehicle Crash Report System database maintained by the Indiana State Police

3) The crash experience which is related to the design feature and does not satisfy Department criteria should be analyzed and evaluated. The evaluation may include, for example, a comparison of the crash rate on the highway to the Statewide rate for that type of facility or may include a statistical analysis of the crash experience at the location of the design feature (e.g., a horizontal curve).

The Road Hazard Analysis Tool (RoadHAT) Form 1 can be used to develop the comparison between similar facility types. The RoadHAT program is available from the INDOT Technical Application Pathway (ITAP).

f. Cost-Effective Analysis. A cost-effective analysis should be conducted to justify the proposed design exception, if applicable (e.g., there are crashes related to the design feature in question. See Chapter 50 for more information.

g. Ancillary Impact. Adverse effects that the design exception will have on other design elements on or near the project site must be evaluated and documented (e.g., sight distance on a horizontal curve impacts intersection sight distance at an intersection outside the project limits).

h. Safety. The safety impacts of the design exception must be evaluated and documented. For example, if there were no crashes with the existing condition in place and the project will match or improve the situation, the conclusion is that there is no increase in crashes. For a new roadway (i.e. no crash history), the safety impacts can be evaluated by comparing the predicted number of crashes

using the proposed value for the design element to predicted crashes using the value that satisfies the controlling criterion requirement.

i. Mitigation. The designer must document the proposed mitigation measures which will be implemented to alleviate the retention or construction of the design feature which does not satisfy Department criteria (e.g., traffic-control devices). Mitigation resources are available from the FHWA publication *Mitigation Strategies for Design Exceptions*. This publication is available from the FHWA website at http://safety.fhwa.dot.gov/geometric/pubs/.

j. Other Factors. Other factors which may have an effect on the final recommendation should be discussed. For example, the following:

1) projected service life of the facility after construction is completed;
2) compatibility with adjacent sections of the proposed project;
3) probable time before reconstruction of the section is anticipated; and
4) environmental and right-of-way impacts of satisfying the Department criteria.

2. Level One Criteria Design Exception for 3R Non-Freeway Projects. A streamlined design exception may be used to retain or replace an existing geometric feature in-kind or when the proposed criteria improve the existing but do not meet the criteria found in Chapter 55. When multiple design exceptions are required for a 3R Non-Freeway project, a single document with multiple cover sheets should be created. At a minimum the design exception will include the following.

a. Project Description. Include the project location, functional classification, description of work, design year ADT including the percentage of trucks, and type of area (residential, commercial, rural, etc.) in which the project is located.

b. Design Feature. Include a description of the design feature that does not satisfy the criteria in Chapter 55. The existing criterion, the proposed criterion and the criterion in Chapter 55 should be identified, with respective design speeds where applicable. Drawings should be used to explain the criterion if necessary. The reason for the design exception request should be indicated. The intent to retain an existing geometric condition or replace it in-kind should be clearly stated.

c. Crash Analysis. Using the most recent 3-year crash history, document that the roadway is performing as expected. For INDOT projects crash history is available through the Automated Reporting Information Exchange System (ARIES), which is the Web portal to the Indiana Vehicle Crash Report System database maintained by the Indiana State Police.

An acceptable crash history may be no crashes, an evaluation using RoadHAT Form 1 resulting in an I_{CF} and I_{CC} of 0 or less, or a review of crash data that indicates there is not an apparent relationship between existing roadway geometry or operation (e.g. sharp horizontal curve, lack of exclusive left turn lane) and crash location and manner of collision (e.g. head-on, rear end, right angle). The RoadHAT program is available from the INDOT Technical Application Pathway (ITAP).

A summary of the raw data including the following should be included in tabular form at a minimum: year, location, manner of collision, and severity level (e.g. property damage only, injury, or fatal).

d. Plans for Expansion. Document that roadway expansion is not planned due to increased traffic demand or as part of an overall corridor improvement. For the State Highway System, the district Technical Services Division, in cooperation with the central office Asset Management Division Office of Technical Planning can provide this information.

e. Compatibility with Adjacent Sections. Indicate if the proposed roadway cross section is compatible with the roadway section before and after the project limits, i.e. the same cross section width or negligibly wider or narrower than the adjacent roadway. In general, the proposed roadway should not be narrower than the existing roadway. Treatment of an existing roadway section that is wider than the adjacent sections should be addressed on a project-by-project basis.

f. Mitigation. The designer must document the proposed mitigation measures which will be implemented to alleviate the retention or construction of the design feature which does not satisfy minimum criteria. Mitigation resources are available from the FHWA publication *Mitigation Strategies for Design Exceptions*. This publication is available from the FHWA website at http://safety.fhwa.dot.gov/geometric/pubs/.

3. ADA Compliance. Compliance with the ADA is a requirement to the maximum extent feasible whether a project includes federal funds, 100% state funds, 100% local funds, or a combination thereof. When an element of a pedestrian access route cannot be constructed due to an existing constraint, that element must be documented as technically infeasible.

A determination of technical infeasibility does not constitute a waiver of the ADA requirements, but rather serves as a process of sufficiently documenting alternatives considered, existing constraints, and costs associated with compliance for later use, if necessary, as the basis for a defense regarding a complaint or litigation.

The Department's ADA Committee will review requests for determination of technical infeasibility in accordance with the Technical Infeasibility Policy. The Committee will review requests for determination of technical infeasibility for projects that contain federal funds or are 100% State-funded. The determination of technical infeasibility is the responsibility of the Local Public Agency (LPA) for 100% locally-funded projects.

A request for determination of technical infeasibility should be sent to the Director of Highway Design & Technical Services. In addition, the Title VI/ADA Program Manager must receive a copy of the request. The request submission should include the following:

a. DES Number, if available;
b. project location and description of the scope of the project;
c. a detailed explanation of the element and ADA standard that cannot be met.
d. a detailed explanation of the technical infeasibility, i.e. why the standard cannot be met;
e. a detailed explanation of at least two options considered before requesting a determination of technical infeasibility and why these options were not pursued further;
f. a recommendation for a proposed solution. This should include an explanation why the proposed solution is the best fit for the given circumstances and how it provides accessibility to the maximum extent feasible;
g. an itemization of the costs to construct the element to be ADA-compliant and comparison to the overall project cost; and
h. pictures and/or drawings of the actual project location and proposed solutions.

Design Exception Request Routing and Approval, NHS or Non-NHS Route Project.

For further information regarding approval of a Level One design exception request, see the notes or statements associated with the figures in Chapter 53, Section 54-3.0, and Section 55-3.0.

A design exception for a local-agency project or a State project involving an element on a local agency's road must be signed by the local elected officials who have jurisdiction of the project or road prior to routing for review.

Within INDOT, the final concurrence in the design exception is the responsibility of the Bridges or Highway Design and Technical Support Division Director.

The Level One design exception request should be routed for approval as follows:

1) project manager;
2) project reviewer. The project reviewer must be an in-house reviewer;
3) District Capital Program Management Director (CPMD). It is acceptable for the CPMD to sign concurrently with the project manager;
4) Bridges or Highway Design and Technical Support Division Director
5) FHWA for approval, as applicable.

40-8.04(02) FHWA Procedure

A proposed exception to the Level One criteria for a project on the Interstate system and has FHWA oversight must be submitted to the FHWA Indiana Division's Administrator for review and approval. A proposed exception for a Federal-aid project will not be submitted to FHWA until after the exception has completed the internal Department process; see Section 40-8.04(01). The documentation required for the Department's exception process will be sufficient for FHWA evaluation.

For a Level Two design exception, the designer should inform FHWA of such exception on an FHWA oversight Interstate-system project.

40-8.04(03) Procedure for Exception to Vertical Clearance on the Interstate System [Rev. Jul 2014]

The Bridges director can only take approval action on a design exception to reduce or retain the existing vertical clearance over the Interstate system that is less than the required 16'-0'' after

coordinating formally with the Department of Defense (DOD), Surface Deployment and Distribution Command Transportation Engineering Agency (SDDCTEA). This coordination is necessary whether the work is a new construction project, a project that does not provide for correction of an existing substandard condition, or a project that creates a substandard condition at an existing structure. The requirement to provide or preserve the 16'-0'' vertical clearance extends to the full roadway width including shoulders for the through lanes, as well as to ramps or collector-distributor roadways in an Interstate-to-Interstate interchange. This requirement applies to the Indiana Toll Road since it is part of the Interstate System.

The designer must include the completed Interstate Vertical Clearance Exception Coordination form with the design exception request. In addition to the design exception information in Section 40-8.04(01), item 1, the submission should include preliminary plan and profile sheets for both the Interstate highway and the overpassing structure. The Vertical Clearance Exception Coordination form is available at www.in.gov/dot/div/contracts/design/dmforms.

The Bridges director will coordinate directly with DOD. A response time of 30 days after being sent from INDOT should allow an adequate review period for the SDDCTEA.

If the SDDCTEA reply does not agree with the design exception, INDOT personnel should consider feasible mitigation measures and should notify the SDDCTEA of the proposed action.

On a project with FHWA oversight, INDOT personnel should work jointly with FHWA in determining proposed mitigation measures.

Coordination with the SDDCTEA is to be completed before transmitting the design exception to the FHWA for a project with FHWA oversight. The submission to the FHWA should include documentation that the coordination with the SDDCTEA has been satisfactorily completed.

40-8.04(04) Procedure for Local Project with Federal Funds

For a local project with Federal funds, a design-exception request will follow the procedures in Section 40-8.04(01). The design exception must be signed by the local elected officials who have jurisdiction of the project or road prior to routing for review.

40-8.04(05) Procedure for 100% Locally-Funded Project

For a project funded entirely with local funds, the local agency should establish a procedure so that an individual with the proper authority will approve the design exception.

40-8.04(06) Signature Block

The Bridges or Highway Design and Technical Support Division director is responsible for the approval of each proposed exception to the Level One criteria for an FHWA-exempt project on the NHS system, or each Federal-aid project on a non-NHS route. The Division director must also approve each design exception for a Federal-aid project on the NHS that is not exempt from FHWA oversight before the exception is submitted to FHWA for its approval. The Division director is responsible for approval of each design-exception request for a 100% State-funded project

40-8.05 Documentation

The Level One Controlling Criteria Checklist should be used to document the project's accordance with the Department's Level One design criteria. An editable version of this form is available on the Department's website at www.in.gov/dot/div/contracts/design/dmforms/, Checklist 40-8B. This applies to each project, with or without design exception. The designer should complete the appropriate boxes on the form. The determination of whether or not the proposed project design satisfies the INDOT design criteria is dependent upon the project scope of work and the design criteria described herein. If, for example, a 3R non-freeway project is being designed, Chapter 55 will apply.

NATIONAL TRUCK NETWORK

BASED ON JUNE 1, 1991 FAP SYSTEM

DATE	FEDERAL PRIMARY SYSTEM REVISION		COUNTIES
07-01-76	FAP REALIGNMENT		STATEWIDE
09-02-76	FAP-042		LAWRENCE JACKSON
11-16-76	FAP-200-202	FORT WAYNE	ALLEN
01-16-76	FAP-186	ELKHART	ELKHART
04-07-77	FAP-201	HARTFORD CITY	BLACKFORD
12-09-77	FAP-075-FAP-18	HUNTINGBURG	DUBOIS
04-13-78	FAP-194	LOWELL	LAKE
05-08-78	FAP-017		SULLIVAN
05-30-78	FAP-237		ALLEN DEKALB
07-14-78	FAP-019-212-226	N.W. INDIANA	LAKE PORTER
08-08-78	FAP-045	MUNCIE UB	DELAWARE
04-03-79	FAP-206-FAP-230	SOUTH BEND	ELKHART ST. JOSEPH
02-15-80	FAP-251		ALLEN
03-27-80	FAP-257		OHIO DEARBORN
05-19-80	FAP-132		MIAMI
08-12-80	FAP-088		MADISON
10-01-80	FAP-132		MIAMI
12-15-80	FAP-170		ALLEN
12-15-80	FAP-231		WELLS
08-05-81	FAP-84		VANDERBURG WARRICK
12-01-82	FAP-207		JENNINGS
12-01-82	FAP-199		DECATUR JENNINGS
12-01-82	FAP-042-043		RIPLEY JENNINGS
12-09-82	FAP-071-072		FULTON
12-09-82	FAP-182		FULTON WABASH
02-04-83	FAP-100		WHITLEY
03-04-83	FAP-111		WHITE
03-01-83	FAP-183		TIPPECANOE
03-04-83	FAP-144		ALLEN WHITLEY
04-25-83	FAP-099		WHITLEY
05-13-83	FAP-219		ELKHART
05-13-83	FAP-181		ELKHART
05-15-83	FAP-165		ELKHART
06-07-83	FAP-025		SCOTT
06-09-83	FAP-295		CLARK
06-14-83	FAP-219		ALLEN
09-01-83	FAP-015		JEFFERSON
06-27-84	FAP-046		LAWRENCE
07-10-85	FAP-187		MADISON
09-19-86	FAP-249-251-277		ADAMS
01-23-87	FAP-076		HENDRICKS
11-09-87	FAP-206		SOUTH BEND
06-22-89	FAP-146		CASS MIAMI
06-22-89	FAP-042		SEYMOUR JACKSON
03-01-91	FAP-005		POSEY
12-11-91	FAP-291		VIGO

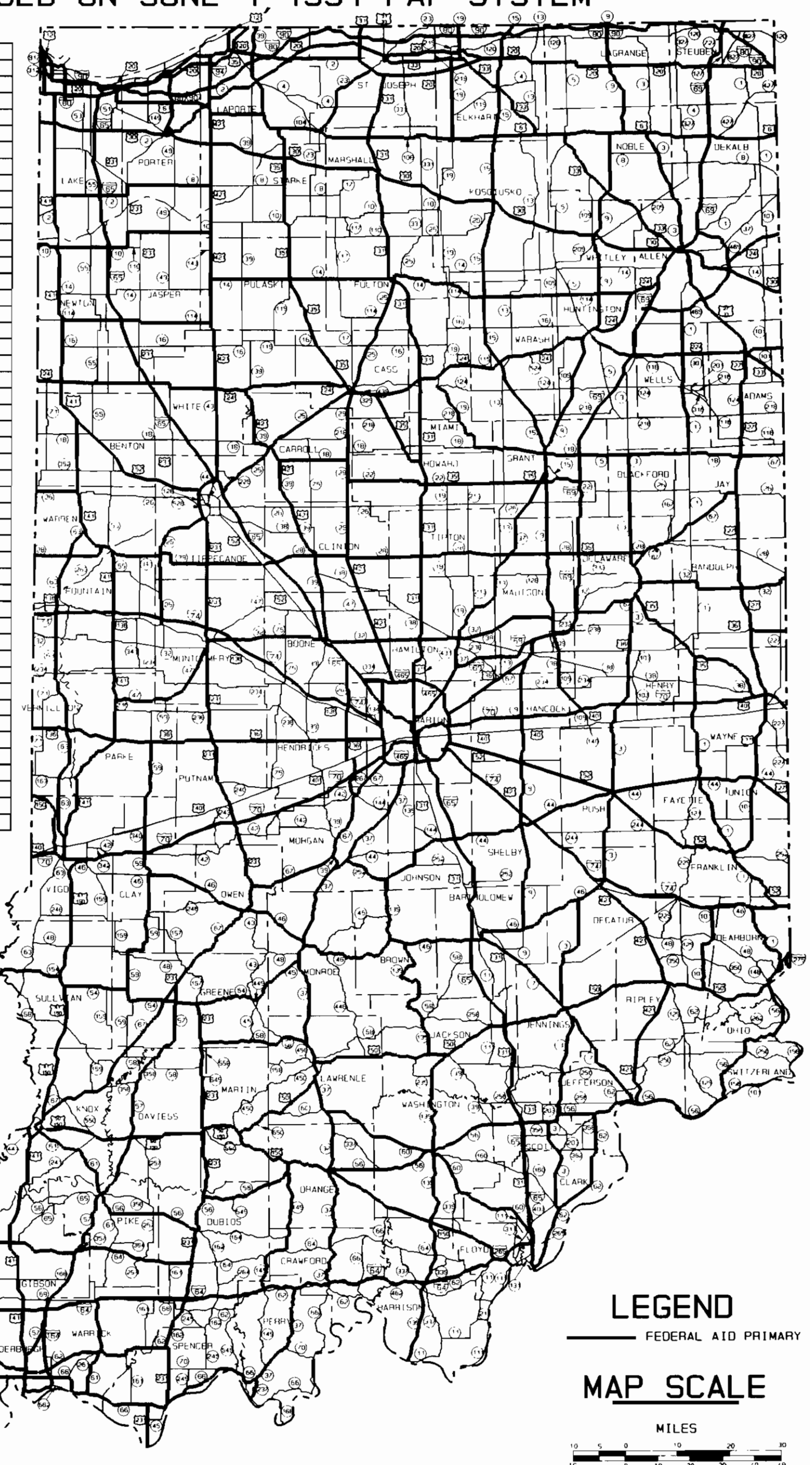

FIGURE 40-1B 40-1(11)

Back

PROJECT SCOPE OF WORK	DESIGN YEAR
New Construction or Reconstruction	20
3R, Freeway	20 *
3R, Non-Freeway	20 *
Partial 3R	10
Intersection Improvement	20 *

Note: The design year is the number of years after the work is expected to be completed.

** For a partial 3R project, this may be 10.*

RECOMMENDED DESIGN-YEAR
TRAFFIC VOLUME FOR ROAD DESIGN

Figure 40-2A

Back

TYPE OF FACILITY	MEASURE OF EFFECTIVENESS
Freeway Basic freeway segment Weaving area Ramp junction	 Density (passenger cars per mile per lane) Average travel speed (mph) Flow rate (passenger cars per hour)
Highway of 4 or More Lanes	Density (passenger cars per mile per lane)
Two-Lane Highway	Time delay (%) Average travel speed (mph)
Arterial	Average travel speed (mph)
Signalized Intersection	Average individual stopped delay (seconds/vehicle)
Unsignalized Intersection	Reserve capacity (passenger cars per hour)

MEASURE OF EFFECTIVENESS FOR LEVEL OF SERVICE

Figure 40-2B

Back

Geographic Location	System	Minimum	Maximum
Rural	State Highway	n/a	55 mph *
	Non-State Highway	30 mph	55 mph
Urban	State Highway	n/a	30 mph
	Non-State Highway	20 mph	55 mph (day) 50 mph (night)

Notes:

* *60 mph for a facility of 4 or more lanes*

1. *This table applies to a non-Interstate facility.*

2. *See Section 40-3.02(03) for exceptions.*

LEGAL SPEED LIMITS

Figure 40-3A

Back

DESIGN VEHICLE TYPE	SYMBOL	DIMENSIONS (ft)										
		Overall			Overhang		Wheelbases					
		Height	Width	Lgth.	Front	Rear	WB1	WB2	S	T	WB3	WB4
Passenger Car	P	4.25	7.0	19.0	3.0	5.0	11.0					
Single Unit Truck	SU	11-13.5	8.0	30.0	4.0	6.0	20.0					
Intercity Bus	BUS-40	12.0	8.5	40.0	6.0	6.3[a]	24.0	3.7				
Motor Coach	BUS-45	12.0	8.5	45.0	6.0	8.5[a]	26.5	4.0				
City Transit Bus	CITY-BUS	10.5	8.5	40.0	7.0	8.0	25.0					
Conventional School Bus (65 Pass.)	S-BUS 36	10.5	8.0	35.8	2.5	12.0	21.3					
Large School Bus (84 Pass.)	S-BUS 40	10.5	8.0	40.0	7.0	13.0	20.0					
Articulated Bus	A-BUS	11.0	8.5	60.0	8.6	10.0	22.0	19.4	6.2[b]	13.2[b]		
Combination Trucks:												
Intermediate Semitrailer	WB-40	13.5	8.0	45.5	3.0	2.5[a]	12.5	27.5				
Intermediate Semitrailer	WB-50	13.5	8.5	55.0	3.0	2.0[a]	14.6	35.4				
Interstate Semitrailer	WB-62	13.5	8.5	68.5	4.0	2.5[a]	21.6	40.4				
Interstate Semitrailer	WB-65 or WB-67	13.5	8.5	73.5	4.0	4.5-2.5[a]	21.6	43.4				
“Double-Bottom”-Semitrailer	WB-67D	13.5	8.5	73.3	2.33	3.0	11.0	23.0	3.0[c]	7.0[c]	23.0	
Triple-Semitrailer	WB-100T	13.5	8.5	104.8	2.33	3.0	11.0	22.5	3.0[c]	7.0[c]	23.0	23.0
Turnpike Double Semitrailer	WB-109D	13.5	8.5	114	2.33	2.5[d]	14.3	39.9	2.5[d]	10.0[d]	44.5	
Recreational Vehicles:												
Motor Home	MH	12.0	8.0	30.0	4.0	6.0	20.0					
Car and Camper Trailer	P/T	10.0	8.0	48.7	3.0	10.0	11.0		5	19		
Car and Boat Trailer	P/B		8.0	42.0	3.0	8.0	11.0		5	15		
Motor Home and Boat Trailer	MH/B	12.0	8.0	53.0	4.0	8.0	20.0		6	15		
Farm Tractor[e]	TR	10.0	8-10.0	16.0[f]			10.0	9.0	3	6.5		

* The Indiana Design Vehicle (IDV) is equivalent to the WB-65.
WB1, WB2, WB3, and WB4 are effective vehicle wheelbases.
S = Distance from the rear effective axle to the hitch point.
T = Distance from the hitch point to the lead effective axle of the following unit.

a = This is overhang from the back axle of the tandem axle assembly.
b = Combined dimension is 19.4 ft and articulating section is 4 ft wide.
c = Combined dimension is typically 10.0 ft.
d = Combined dimension is typically 12.5 ft.
e = Dimensions are for a 150-200 hp tractor excluding wagon length.
f = To obtain the total length of tractor and one wagon, add 18.5 ft to tractor length. Wagon length is measured from front of drawbar to rear of wagon, and drawbar is 6.5 ft long.

DESIGN-VEHICLE DIMENSIONS

Figure 40-4A

Back

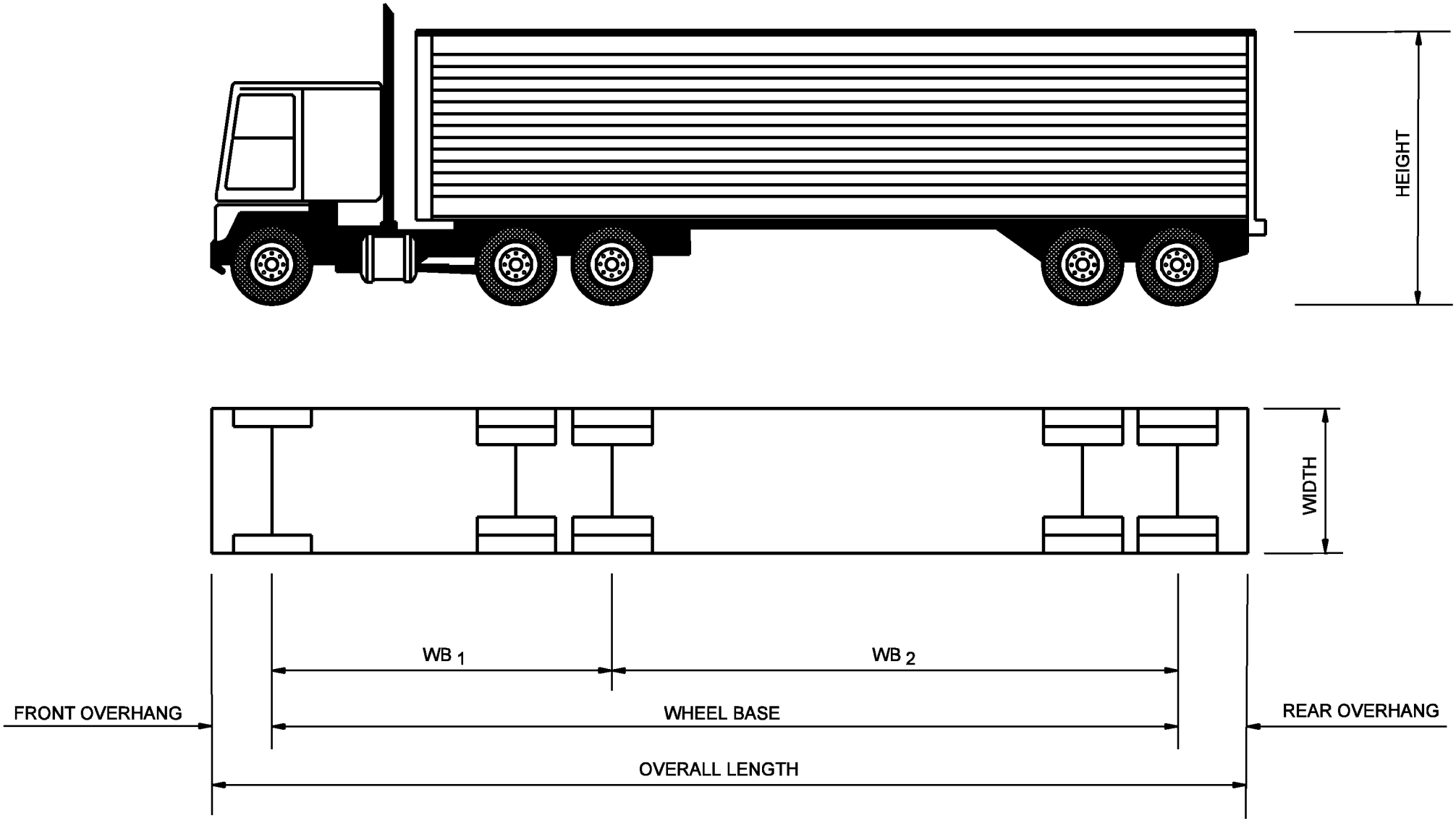

BASIC DIMENSIONS OF DESIGN VEHICLE
(Combination Truck A)

Figure 40-4B

Back

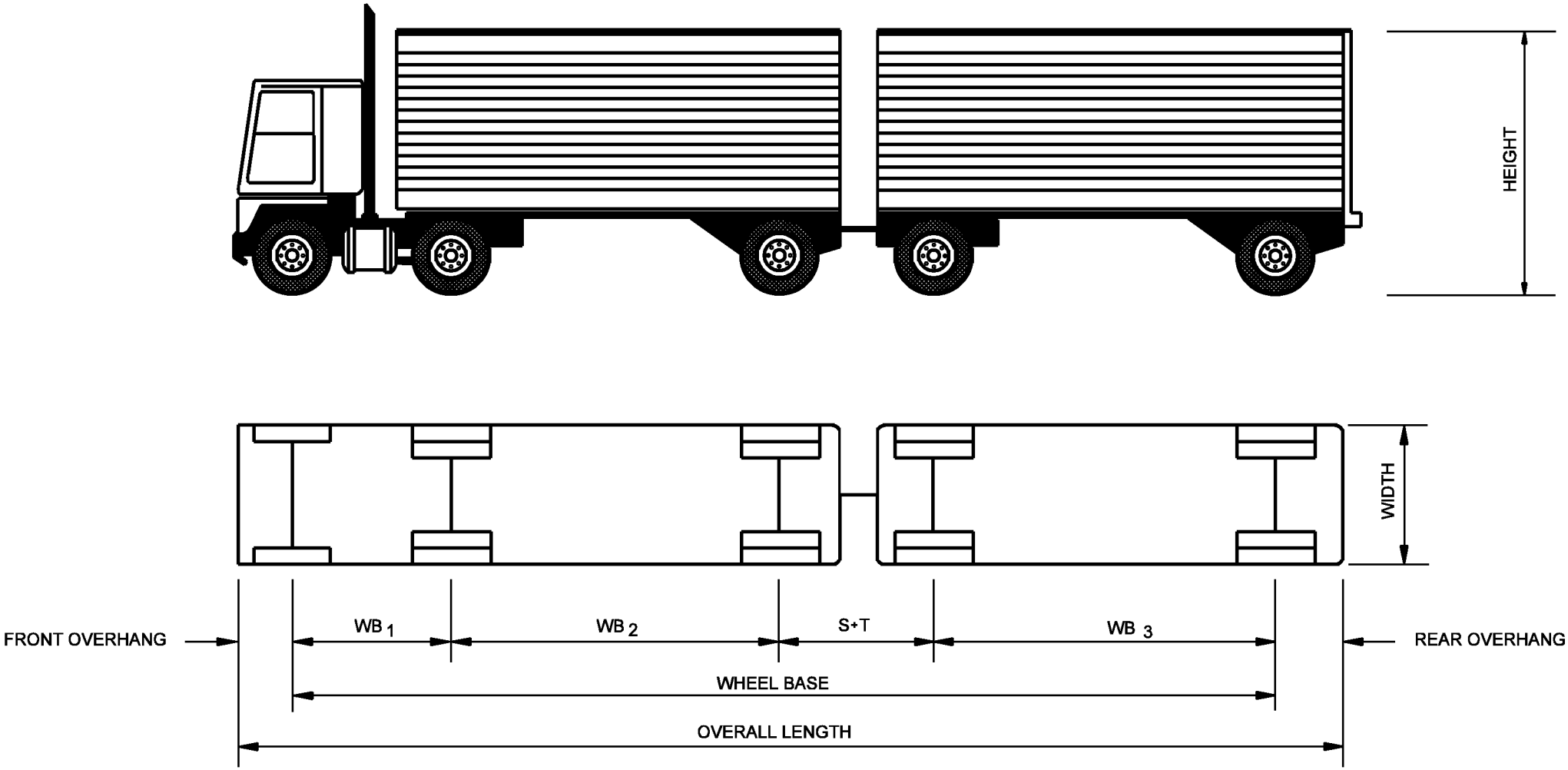

BASIC DIMENSIONS OF DESIGN VEHICLE
(Combination Truck B)

Figure 40-4C

Back

RRRR & RRR SYSTEM

FIGURE 40-6A 40-6(9)

Back

Project Category	HIGHWAY SYSTEM		
	Interstate	Non-Interstate NHS	Non-NHS
New Construction, Reconstruction, or Partial Reconstruction (4R) ≥ $1,000,000	**FHWA Oversight**	INDOT Oversight	INDOT Oversight
New Construction or Reconstruction (4R) < $1,000,000	INDOT Oversight	INDOT Oversight	INDOT Oversight
3R Project	INDOT Oversight	INDOT Oversight	INDOT Oversight
Design-Build Project	**FHWA Oversight**	**FHWA Oversight**	INDOT Oversight
Rest Area or Weigh Station ≥ $1,000,000	**FHWA Oversight**	INDOT Oversight	INDOT Oversight
Intelligent Transportation Systems (ITS) Features	**FHWA Oversight**	**FHWA Oversight**	INDOT Oversight

Note: Though this figure provides guidelines for determining FHWA oversight for each project, there may be exceptions, such as a project including a unique feature or an unusual circumstance such as a special structure design, experimental feature, etc., for which it is desirable to have FHWA oversight.

OVERSIGHT RESPONSIBILITY

Figure 40-7A

Back

40-8A SDDCTEA Interstate Vertical Clearance Exception Coordination [Rev. Jul. 2014]

This figure deleted

The MTMCTEA Design Exception Request Letter has been revised to the Surface Deployment and Distribution Command (SDDCTEA) Interstate Vertical Clearance Exception Coordination form. The form is available for download at http://www.in.gov/dot/div/contracts/design/dmforms/, Application/Request 40-8A

MTMCTEA Design Exception Request Letter
Figure 40-8A

Back

40-8B Level One Controlling Criteria Checklist [Rev. Jul. 2014]

This figure deleted

The Level One Design Criteria Checklist has been renamed the Level One Controlling Criteria Checklist. The form and instructions for use are available for download at http://www.in.gov/dot/div/contracts/design/dmforms/, Checklist 40-8B

Editable Level One Design Criteria Checklist
Figure 40-8B

Back

40-8C Level One Design Exception Request [Rev. Jul. 2014]

This figure deleted

The Level One Design Exception Request has been updated to reflect organizational changes in the Department. The editable form is available for download at http://www.in.gov/dot/div/contracts/design/dmforms/, Cover Letter/Memorandum 40-8C

Level One Design Exception Request
Figure 40-8C

Back