CHAPTER 409

Abutment, Bent, Pier, and Bearing

Design Memorandum	Revision Date	Sections Affected
13-11	May 2013	409-7.03(03), Figure 409-7F
16-32	Sep. 2016	409-2.04, Figures 409-2C, 409-2D, 409-3A, 409-3B, 409-3D

The design memorandum applicable revision date is noted in brackets next to each section heading below.

TABLE OF CONTENTS

TABLE OF CONTENTS 2

LIST OF FIGURES 5

409-1.0 LIMIT STATES, RESISTANCE FACTORS, AND LOADS 7
409-1.01 Limit States 7
409-1.01(01) Service-Limit State 7
409-1.01(02) Strength-Limit State 7
409-1.01(03) Extreme-Event-Limit State 8
409-1.02 Resistance Factors 8
409-1.03 Load Combinations and Load Factors 8

409-2.0 INTEGRAL END BENT [Rev. Oct. 2012, SEP. 2016] 8
409-2.01 General [Rev. Oct. 2012, Sep. 2016] 8
409-2.02 Materials 9
409-2.03 Design Criteria 9
409-2.03(01) Ends 9
409-2.03(02) Passive Earth Pressure [Rev. Oct. 2012] 9
409-2.03(03) Interior Pile Bent 10
409-2.03(04) Shear and Moment 10
409-2.04 Design Requirements [Rev. Sep. 2016] 10
409-2.04(01) General Requirements [Rev. Oct. 2012, Apr. 2016] 10
409-2.04(02) Pile Connection and Plans Details [Rev. Oct. 2012, Sep. 2016] 11

409-3.0 SEMI-INTEGRAL END BENT 13
409-3.01 General 13
409-3.02 Materials 13
409-3.03 Details 13

409-4.0 PILES, DESIGN CONSIDERATIONS, AND DETAILS FOR END BENTS 14
409-4.01 Piles 14
409-4.01(01) Pile Spacing 14
409-4.01(02) Number of Piles 14
409-4.01(03) Cap Overhang 14
409-4.01(04) Pile Overload 14
409-4.01(05) Live-Load Distribution 15
409-4.02 Design Considerations 15
409-4.02(01) Integral End Bent 15
409-4.02(02) Semi-Integral End Bent 16
409-4.02(03) Wingwalls 16
409-4.03 Details 17

409-4.03(01) Construction Joint [Rev. Oct. 2012] 17
409-4.03(02) Longitudinal Open Joint 17

409-5.0 CANTILEVER ABUTMENT AND WINGWALLS 17
409-5.01 General [Rev. Oct. 2012] 17
409-5.02 Materials 18
409-5.03 Design Considerations 18
409-5.03(01) Integral End Bent 18
409-5.03(02) Expansion Joints 18
409-5.03(03) Abutment-Wingwall Junction 19
409-5.03(04) Stem Batter 19
409-5.03(05) Concrete Cover 19
409-5.03(06) Keyway 19
409-5.03(07) Backfill 19
409-5.03(08) Toe 20
409-5.03(09) Soil Weight 20
409-5.03(10) Minimum Footing Thickness 20
409-5.03(11) Piles 20
409-5.03(12) Loads 20
409-5.03(13) Details 20
409-5.03(14) Drainage 21
409-5.03(15) Construction Joints 21

409-6.0 INTERIOR SUPPORTS 22
409-6.01 General 22
409-6.01(01) Types of Interior Supports 22
409-6.01(02) Usage 22
409-6.02 Materials 23
409-6.02(01) Epoxy-Coated Reinforcement Under Expansion Joint 23
409-6.02(02) Concrete 23
409-6.03 General Design Considerations 23
409-6.03(01) Pier in Waterway 23
409-6.03(02) Roadway-Grade Separation [Rev. Oct. 2012] 24
409-6.03(03) Railroad-Grade Separation [Rev. Oct. 2012] 24
409-6.03(04) Pier-Cap Reinforcement 24
409-6.03(05) Column Reinforcement 24
409-6.03(06) Reinforcing-Steel Splicing 24
409-6.03(07) Compression Reinforcement 25
409-6.03(08) Piles 25
409-6.04 Specific Design Considerations 25
409-6.04(01) Extended-Pile Bent 25
409-6.04(02) Hammerhead Pier 26

409-6.04(03) Frame Bent 26
409-6.04(04) Compression 27
409-6.05 Details 27
409-6.05(01) Size 27
409-6.05(02) Cap Extension 27
409-6.05(03) Step Cap 28
409-6.05(04) Construction Joints 28
409-6.05(05) Reinforcement Clearance 28
409-6.05(06) Backfill 28

409-7.0 BEARINGS 28
409-7.01 General 28
409-7.01(01) Movement 29
409-7.01(02) Effect of Bridge Skew and Horizontal Curvature 29
409-7.01(03) Thermal Effects 29
409-7.01(04) Loads and Restraint 30
409-7.01(05) Serviceability, Maintenance, and Protection Requirements 30
409-7.01(06) Clear Distance 30
409-7.01(07) Bearing Selection 30
409-7.01(08) Anchor Plates and Anchor Bolts 31
409-7.02 Elastomeric Bearing Pads and Steel-Reinforced Elastomeric Bearings 31
409-7.02(01) Elastomer 32
409-7.02(02) Steel-Reinforced Elastomeric Bearing Pad 32
409-7.02(03) Elastomeric Bearing Pad 32
409-7.03 Standardized Elastomeric Bearing Pads and Assemblies 32
409-7.03(01) Standard Pad and Assembly Types 32
409-7.03(02) Design Parameters 33
409-7.03(03) Determining Standard Bearing-Device Type [Rev. May 2013] 33
409-7.04 Nonstandardized Elastomeric Bearing Device 34
409-7.05 Connections for Elastomeric Bearing or PTFE Bearing 35
409-7.06 Shear Keys at Semi-Fixed Support 36
409-7.07 Fixed Steel Bearing 36
409-7.08 Pot Bearing 37
409-7.09 Miscellaneous Bearing-Connection Details 37

409-8.0 BRIDGE-SEAT ELEVATIONS 38

409-9.0 REFERENCES [Rev. Oct. 2012] 38

FIGURES 39

LIST OF FIGURES

Figure	Title
409-2A	Use of Integral End Bent [Rev. Oct. 2012]
409-2B	Intermediate Pier Detail for Integral Structure Located in Seismic Area with Seismic Design Category Greater than A [Added Oct. 2012]
409-2C	Suggested Integral End Bent Details, Method A, Beams Attached Directly to Piling [Rev. Oct. 2012, Sep. 2016]
409-2D	Suggested Integral End Bent Details, Method B, Beams Attached to Concrete Cap [Rev. Oct. 2012, Sep. 2016]
409-2E	Spiral Reinforcement [Added Oct. 2012]
409-2F	Tooth Joint [Added Oct. 2012]
409-2G	Integral End Bent Placed Behind MSE Wall [Added Oct. 2012]
409-3A	Suggested Semi-Integral End Bent Details, Method 1 [Rev. Sep. 2016]
409-3B	Suggested Semi-Integral End Bent Details, Method 2 [Rev. Sep 2016]
409-3C	Joint Membrane Detail
409-3D	Pavement Ledge Detail (for Integral and Semi Integral End Bent) [Rev. Sep. 2016]
409-5A	Typical Wingwall Details
409-5B	Flared-Wing Lengths and End Elevations, Square Structure
409-5C	Flared-Wing Lengths and End Elevations, Structure Skewed to Right
409-5D	Flared-Wing Lengths and End Elevations, Structure Skewed to Left
409-5E	Flared-Wing Corner Dimensions, Square Structure
409-5F	Flared-Wing Corner Dimensions, Structure Skewed to Right
409-5G	Flared-Wing Corner Dimensions, Structure Skewed to Left
409-5H	Typical Abutment Details
409-6A	Extended Pile Bent
409-6B	Wall Pier on Single Row of Piles
409-6C	Hammerhead Pier
409-6D	Geometrics for Frame Bent with Solid Stub Wall
409-6E	Geometrics for Frame Bent with Individual Crashwalls
409-6F	Step Cap
409-6G	Suggested Reinforcing Details for Wall or Hammerhead Pier
409-7A	Summary of Expansion Bearing Capabilities
409-7B	Elastomeric Bearing Pad Types, Properties, and Allowable Values for AASHTO I-
409-7C	Elastomeric Bearing Pad Types, Properties, and Allowable Values for Box Beams
409-7D	Elastomeric Bearing Pad Types, Properties, and Allowable Values for Indiana Bulb-Tee Members and Wide Bulb-Tee Members
409-7E	Elastomeric Bearing Assembly Types, Properties, and Allowable Values for Structural-Steel Members
409-7F	Elastomeric Bearing Pad with Beveled Steel Plate [Rev. May 2013]

409-7G Nominal Shear Resistance of Anchor Bolts and Pintles
409-7H Minimum Connections for Fixed Steel Shoes
409-7 I Fixed Shoe Assembly
409-7J Elastomeric Bearing Assembly
409-7K Elastomeric Bearing Assembly
409-7L Elastomeric Bearing Assembly with Bottom Plate
409-7M PTFE Elastomeric Bearing Assembly

CHAPTER 409

ABUTMENTS, BENTS, PIERS, AND BEARINGS

References shown following section titles are to the AASHTO *LRFD Bridge Design Specifications*.

LRFD Section 11 discusses the design requirements for bents, piers, and abutments. Section 14 discusses the design requirements for bearings. This Chapter describes supplementary information on the design of these structural components. See Chapter 402 for more information on substructure types and their selection.

409-1.0 LIMIT STATES, RESISTANCE FACTORS, AND LOADS

409-1.01 Limit States

The design of abutments, bents, piers, and bearings shall be in accordance with *LRFD*.

409-1.01(01) Service-Limit State

Abutment, bents, and piers shall be investigated for excessive vertical and lateral displacement, and overall stability, at the service-limit state.

LRFD 10.6.2.2, 10.7.2.2, and 10.8.2.2 apply to the investigation of vertical movements.

409-1.01(02) Strength-Limit State

Abutments, bents, and piers shall be investigated at the strength-limit state using *LRFD* Equation 1.3.2.1-1 for bearing resistance failure, lateral sliding or excessive loss of base contact, pullout failure of anchors or soil reinforcements, or structural failure.

409-1.01(03) Extreme-Event-Limit State

Substructure elements for seismic loading shall be designed in accordance with AASHTO *Guide Specifications for LRFD Seismic Bridge Design*. For all other extreme events, substructure elements shall be designed in accordance with AASHTO *LRFD Bridge Design Specifications.*

409-1.02 Resistance Factors

For abutments, bents, and piers, see *LRFD* 11.5.6. The resistance factor for bearings shall be taken as 1.0.

409-1.03 Load Combinations and Load Factors

See *LRFD* 3.4.1 and 11.5.5.

409-2.0 INTEGRAL END BENT [REV. OCT. 2012, SEP. 2016]

409-2.01 General [Rev. Oct. 2012, Sep. 2016]

An integral end bent eliminates the expansion joint in the bridge deck, which reduces both the initial construction costs and subsequent maintenance costs.

Integral end bents shall be used for a new structure in accordance with the geometric limitations provided in Figure 409-2A. Minimum support-length requirements need not to be investigated for an integral end bent bridge. An integral structure of length of 500 ft or less will not require seismic analysis, provided the end bent is detailed in accordance with the information provided in this chapter. An integral structure of 500 ft or longer located in an area in a seismic design category greater than A will be analyzed using elastic dynamic analysis.

For additional information and research supporting INDOT's integral end bent design philosophy, see the following publications:

1. Frosch, R.J., V. Chovichien, K. Durbin, and D. Fedroff. *Jointless and Smoother Bridges: Behavior and Design of Piles*. Publication FHWA/IN/JTRP-2004/24. Joint Transportation Research Program, Indiana Department of Transportation and Purdue University, West Lafayette, Indiana, 2006. This study investigates the fundamental principals affecting the integral end bent, gives recommendations concerning minimum pile depths, and recommends the limits of use be extended to 500 feet.

2. Frosch, R.J., Kreger, M.E., and A.M. Talbott. *Earthquake Resistance of Integral Abutment Bridges*. Publication FHWA/IN/JTRP-2008/11. Joint Transportation Research Program, Indiana Department of Transportation and Purdue University, West Lafayette, Indiana, 2009. This study investigates the seismic resistance of the integral abutment (end bent).
3. Frosch, R.J. and M.D. Lovell. *Long-Term Behavior of Integral Abutment Bridges*. Joint Transportation Research Program, Indiana Department of Transportation and Purdue University, West Lafayette, Indiana, 2011. This study extends the previous two studies to further investigate skew and detailing of the integral abutment (end bent).

409-2.02 Materials

Class C concrete and epoxy coated reinforcing bars are required.

The wingwalls concrete shall be Class C.

409-2.03 Design Criteria

Although each end of the superstructure is monolithically attached to an integral end bent, the rotation permitted by the piles is sufficiently high, and the attendant end moment is sufficiently low, to justify the assumption of a pinned-end condition for design. The following design assumptions shall be considered.

409-2.03(01) Ends

The ends of the superstructure are free to rotate and translate longitudinally.

409-2.03(02) Passive Earth Pressure [Rev. Oct. 2012]

The restraining effect of passive earth pressure behind the end bent may be neglected in considering superstructure longitudinal force distribution to the interior piers. Alternatively, the effect of passive earth pressure behind the end bent may be considered by distributing the longitudinal forces between the interior supports, end bent supports, and the soil behind the end bent.

409-2.03(03) Interior Pile Bent

All longitudinal forces from the superstructure shall be distributed among the interior supports, end bents, and soil behind the end bents based on relative stiffness in designing an interior pile bent or a thin-wall pier on a single row of piles.

409-2.03(04) Shear and Moment

Force effects in the cap beam may be determined on the basis of a linear distribution of vertical pile reactions. For minimum reinforcement, the cap shall be treated as a structural beam.

409-2.04 Design Requirements [Rev. Sep. 2016]

409-2.04(01) General Requirements [Rev. Oct. 2012, Apr. 2016]

The following requirements must be satisfied.

1. Backfill. Each integral end bent for a beam- or girder-type superstructure should be backfilled with aggregate for end bent backfill. Each end bent for a reinforced concrete slab bridge should be backfilled with removable flowable backfill. The INDOT *Standard Drawings* series E 211-BFIL provides backfill details for both concrete slab, beam, and girder structures.

2. Reinforced Concrete Bridge Approach (RCBA). A reinforced concrete bridge approach is utilized to span over the backfill placed behind a newly constructed end bent or mudwall. The RCBA should be anchored to the end bent with epoxy coated #5 threaded tie bar assemblies, spaced at 2'-0" centers. Two layers of polyethylene sheeting shall be placed between the reinforced-concrete bridge approach and the subgrade. INDOT *Standard Drawings* series E 609-RBCA provides additional details.

   Where an expansion joint or mudwall is used, the threaded tie bar anchoring system may not be practical and an alternate connection may be considered.

3. Terminal Joint. A bridge approach joint should be included where the approach pavement is PCCP. For a structure of length of less than 300 ft, a terminal joint of 2 ft width, as shown on the INDOT *Standard Drawings* series E 503-BATJ should be placed at the end of the reinforced concrete bridge approach. An expansion joint should be considered for an integral structure having length from 300 ft to 500 ft. An expansion

joint is required for an integral structure of length greater than 500 ft, as shown in Figure 409-2F.

4. Wingwalls Configuration. Wingwalls shall extend parallel to the centerline of roadway. This configuration reduces the loads imposed upon the bridge structure due to passive earth pressure from the end-bent backfill. See Figure 409-5A for suggested wingwall dimensioning details. The minimum thickness of a wingwall used with an integral end bent shall be 1 ft. The wingwall length shall not be greater than 10 ft. A longer wingwall will require additional analysis.

5. Wingwall Connection. Force effects in the connection between the wingwall and cap, and in the wingwall itself, shall be investigated, and adequate reinforcing steel shall be provided.

6. Interior Diaphragms for Steel Structure. Where steel beams or girders are used, an interior diaphragm shall be placed within 10 ft of the end support to provide beam stability prior to and during the deck pour.

7. Intermediate Pier Details for Integral Structure Located in Seismic Area with Seismic Design Category Greater than A. Intermediate piers should include concrete restrainers as shown in Figure 409-2B.

409-2.04(02) Pile Connection and Plans Details [Rev. Oct. 2012, Sep. 2016]

An integral end bent may be constructed using either of the methods as follows

1. Method A. The superstructure beams are placed on and attached directly to the end bent piling. The entire end bent is then poured at the same time as the superstructure deck. This is the preferred method. See Figure 409-2D

2. Method B. The superstructure beams are set in place and anchored to the previously cast-in-place end bent cap. The concrete above the previously cast-in-place cap shall be poured at the same time as the superstructure deck. See Figure 409-2C

Optional construction joints may be placed in the end bent cap to facilitate construction. An optional joint below the bottom of the beam may be used regardless of bridge length. An optional construction joint may be placed at the pavement ledge elevation shown. However, since 2007 it has been the Department's practice to disallow pouring of the bridge approach continuously with the deck pour for structures with integral or semi-integral end bents.

Regardless of the method used, the end bent shall be in accordance with the following.

1. Width. The width shall not be less than 2.5 ft.

2. Depth. The depth from the bottom of the beam or girder to the bottom of the integral end bent should not exceed 6'- 0". Use of a deeper end bent must be approved by the Bridges Division Office of Bridge Design.

3. Cap Embedment. The embedment of the piles into the cap shall be 2 ft. The embedded portion of the pile should be confined with spiral reinforcement as shown in Figure 409-2E.

4. Beam Attachment. The beams shall be physically attached to the piling if using Method A, or to the cast-in-place cap if using Method B.

5. Beam Extension. The beams shall extend at least 1.75 ft into the bent, as measured along the centerline of the beam.

6. Concrete Cover. Concrete cover beyond the farthest-most edge of the beam at the rear face of the bent shall be at least 4 in. This minimum cover shall also apply to the pavement-ledge area. The top flanges of structural-steel or prestressed concrete I-beams may be coped to satisfy this requirement. Where the 4-in. minimum cover cannot be maintained within a 2.5-ft cap, the cap shall be widened.

7. Stiffener Plates. Structural-steel members shall have stiffener plates welded to both sides of their webs and to the flanges over the supports to anchor the beams into the concrete.

8. Reinforcement through the Webs of Beams. A minimum of three holes shall be provided through the webs of steel members near the front face of the bent for #6 bars to be inserted through. Two holes shall be provided through prestressed concrete I-beam webs near the front face of the bent, to allow #6 bars to be inserted to further anchor the beam to the cap. Box beams shall have two threaded inserts placed in each side face for anchorage of #7 threaded bars.

9. End-Bent Reinforcement. The minimum size of stirrups shall be #6 spaced at a maximum of 1'-0". Longitudinal cap reinforcement shall be at least #7 at 1'-0" maximum spacing along both faces of the bent. All reinforcing steel shall be epoxy coated.

10. Corner Bars. Corner bars shall extend from the rear face of the cap into the top of the deck at not more than 1'-0" spacing as shown in Figures 409-2B and 409-2C. The

figures show suggested details for an integral end bent with a structural-members bridge. Other reinforcement and connection details shall be used where they are structurally sound and afford an advantage if compared to that shown in the figures. See Figures 409-2B and 409-2C for drainage-pipes placement behind an end bent. See *LRFD* 11.4.1 and 11.6.6 for additional drainage information.

11. MSE Wall. If placed behind an MSE retaining wall, the end bent should be configured as shown in Figure 409-2G.

409-3.0 SEMI-INTEGRAL END BENT

409-3.01 General

Semi-integral end bents shall be considered if integral end bents are not practical or feasible. For a skew angle of greater than 30 deg or an expansion length of 250 ft or longer, twisting or racking of the bridge shall be investigated.

Minimum support-length requirements shall be investigated for semi-integral end bent Method 2.

409-3.02 Materials

Semi-integral end bents and wingwalls will require the use of class C concrete and epoxy-coated reinforcing steel.

409-3.03 Details

Figure 409-3A shows details for Method 1. Figure 409-3B shows details for Method 2. Figure 409-3C shows details for the joint-protection sheeting. Figure 409-3D shows details pavement-ledge details for integral and semi-integral end bents. All applicable information shown in the figures shall be shown on the plans.

Wingwalls details are similar to those for an integral end bent except for the connection method. The wingwall is connected to the bent below the seat elevation. See Figure 409-5A for suggested wingwall-dimensioning details. The minimum wingwall thickness of a wingwall shall be 1 ft.

See *LRFD* 11.4.1 and 11.6.6 for additional drainage information.

409-4.0 PILES, DESIGN CONSIDERATIONS, AND DETAILS FOR END BENTS

409-4.01 Piles

The following criteria apply to piling for an integral, semi-integral, or non-integral end bent.

409-4.01(01) Pile Spacing

Pile spacing shall not exceed 10 ft. If the cap is properly analyzed and designed as a continuous beam, this restriction need not apply. If practical, one pile may be placed beneath each girder. See Chapter 408 for minimum pile spacing. For an integral end bent within the limits defined in Figure 409-2A, or for a non-integral end bent, the piles are considered to be free-ended and capable of resisting only horizontal and vertical forces.

409-4.01(02) Number of Piles

See Chapter 408 for the minimum number of piles.

409-4.01(03) Cap Overhang

The minimum cap overhang shall be 1.5 ft measured from centerline of pile.

409-4.01(04) Pile Overload

If an individual pile is overloaded due to the maximum beam or girder loads, the overload amount may be considered equally distributed to the two adjacent piles provided that this distribution of overloads does not cause either of the adjacent piles to exceed its allowable bearing capacity. This distribution of overload will be permitted only if the allowable bearing value for the pile is based upon the capacity of the soils and not on the structural strength of the pile, and if the pile cap has enough beam strength to distribute the overload to the adjacent piles.

409-4.01(05) Live-Load Distribution

The wheel loads located out in the span shall be distributed to the substructure in accordance with the live-load distribution factors shown in *LRFD* 4.6.2.2.2. For wheels located over the support, a simple-span transverse distribution shall be used.

409-4.02 Design Considerations

409-4.02(01) Integral End Bent

The following criteria apply specifically to piles and loads.

1. Loads and Forces. Only vertical loads shall be considered in designing end-bent piling for a structure which satisfies the requirements provided in Figure 409-2A. Force effects in the end-bent piles due to temperature, shrinkage, and creep may be neglected.

   An alternative analysis shall be used if the criteria in Figure 409-2A are not satisfied. The analysis to be made is as follows.

   a. The point of zero movement shall be established by considering the elastic resistance of all substructure elements, bearing devices, and passive earth pressure.

   b. The effects of creep, shrinkage, and temperature shall be considered.

   c. Movement at a point on the superstructure shall be taken as being proportional to its distance to the point of zero movement.

   d. Lateral curvature of the superstructure may be neglected if it satisfies *LRFD* 4.6.1.2.

   e. Vertical force effects in the end-bent piles shall be distributed linearly with load eccentricities properly accounted for.

   f. Lateral soil resistance shall be considered in establishing force effects and buckling resistance of piles.
   Force effects shall be combined in accordance with *LRFD* 3.4.1.

2. Pile Type. Only steel H-piles or pipe piles shall be used with an integral end bent. Steel H-pile webs shall be placed perpendicular to the centerline of the structure to minimize flexural forces in the piling. All end bent piling shall be driven vertically. Only one row of piling is permitted.

409-4.02(02) Semi-Integral End Bent

1. Pile Spacing. The minimum pile spacing shall be as specified in Chapter 408. For a structure with deep girders, two rows of piles with staggered pile spacing shall be considered.

2. Batter. Up to one-half of the piles may be battered to increase the resistance to horizontal movement of the structure.

3. Overturning. If the pile spacing is less than 10 ft and one-half of the piles are battered, overturning need not be investigated. If less than one-half of the piles are battered, or if the pile spacing is 10 ft or greater, the stability due to overturning pressures shall be investigated.

409-4.02(03) Wingwalls

With respect to a spill-through end bent, the following applies to wingwalls.

1. Usage. Each structural-steel or prestressed-concrete beam bridge requires wingwalls. A reinforced-concrete slab bridge usually does not require wingwalls.

2. Dimensions. Wingwalls shall be of sufficient length and depth to prevent the roadway embankment from encroaching onto the stream channel or clear opening. The slope of the fill shall not be steeper than 2:1, perpendicular to the skew. Wingwall lengths can be established on this basis. For more information, see *LRFD* 11.6.1.4 for more information. See Figure 409-5A for suggested wingwall-dimensioning details. The minimum thickness of a wingwall used with an end bent shall be 1 ft.

3. Pile Support. If the wingwalls for a non-integral or semi-integral end bent have a total length of more than 10 ft, pile support shall be investigated. Pile-supported wings shall not be used with an integral end bent.

4. Design. A non-pile-supported wingwall shall be designed as a horizontal cantilevered wall. Because the wingwalls are rigidly attached to the remainder of the bent, the bent is restrained from deflecting except laterally as a unit. Due to the lack of the usual retaining-structure rotation, the active-soil-pressure condition cannot develop, and the design soil pressure must be increased to a value between the active and at-rest condition. Therefore, the horizontal earth pressure to be used in design shall be equal to 150% of the value determined assuming an active-soil condition. Live-load surcharge shall be added to the soil loads in accordance with *LRFD*3.11.6.2.

409-4.03 Details

409-4.03(01) Construction Joint [Rev. Oct. 2012]

The following applies to a construction joint at a spill-through end bent.

1. Type. Construction joint type A shall be used for each horizontal construction joint. See the INDOT *Standard Drawings*.

2. Integral. See Figures 409-2C and 409-2D for construction-joint use at an integral end bent.

409-4.03(02) Longitudinal Open Joint

If the bridge deck includes a longitudinal open joint, an expansion joint shall also be placed in the end bent. Also, flashing shall be placed behind the joint in the end bent. See the INDOT *Standard Drawings*.

409-5.0 CANTILEVER ABUTMENT AND WINGWALLS

409-5.01 General [Rev. Oct. 2012]

See Chapter 402 and *LRFD* 11.6 for more information on the selection and design of abutments.

An abutment functions as both an earth-retaining and vertical-load-carrying structure. A parapet abutment is designed to accommodate thermal movements with strip-seal expansion devices between the concrete deck and abutment end block. An integral end bent shall be designed to accommodate movements at the roadway end of the approach panel.

A mechanically-stabilized-earth-wall bridge abutment placed adjacent to a roadway need not to be checked for vehicle-collision forces as described in *LRFD* 3.6.5. However, if the wall must be placed inside the clear zone, roadside safety shall be addressed.

A mechanically-stabilized-earth-wall bridge abutment placed adjacent to a railroad track shall be in accordance with Section 409-6.03(03).

For soil conditions or bridge geometric dimensions not suitable for a spill-through end bent or mechanically-stabilized-earth abutment, an abutment with wingwalls of the cantilever type shall be used. Such a cantilever structural unit shall be founded on a spread footing, drilled shafts, or a driven-pile footing with a minimum of two rows of piles. The front row of piles may be battered a maximum of 1:4 to provide additional horizontal resistance.

409-5.02 Materials

For a mechanically-stabilized-earth abutment, the required materials are described in the INDOT *Standard Specifications*.

For an abutment or wingwall, class A concrete shall be used for all components above the footing. Class B concrete shall be used in the footing.

If an expansion joint is located directly over the abutment cap, all reinforcement in the abutment wall shall be epoxy coated.

409-5.03 Design Considerations

409-5.03(01) Integral End Bent

An integral end bent shall be designed to resist and absorb creep, shrinkage, and thermal deformations of the superstructure. Movement calculations shall consider temperature, creep, and long-term prestress shortening in determining potential movements. See *LRFD* 11.6.1.3 for more information.

409-5.03(02) Expansion Joints

Vertical expansion joints shall be considered for an abutment whose width exceeds 90 ft, as indicated in *LRFD* 11.6.1.6.

409-5.03(03) Abutment-Wingwall Junction

The junction of the abutment wall and wingwall is a critical design element, requiring the considerations as follows.

1. If the abutment wall and wingwall are designed using active earth pressure, the two elements shall be separated by a filled expansion joint of ½-in. width to permit the expected deformations. If the abutment is designed using at-rest earth pressure, an expansion joint between the wingwall and abutment wall is not required.

2. If the wingwall is tied to the abutment wall with no joint, all horizontal steel reinforcement shall be developed into both elements such that full moment resistance can be obtained.

409-5.03(04) Stem Batter

Where a batter is used, it shall range from 1:10 through 1:15.

409-5.03(05) Concrete Cover

See *LRFD* Table 5.12.3-1 for more information.

409-5.03(06) Keyway

A keyway shall be used in each vertical expansion joints. See the INDOT *Standard Drawings* for details.

409-5.03(07) Backfill

The abutment and wingwalls shall be backfilled with structure backfill. The neat-line limits shall be shown on the Layout sheet.

409-5.03(08) Toe

The fill on the toe of footing shall be ignored in investigating sliding resistance.

409-5.03(09) Soil Weight

Only the weight of the soil which is vertically above the heel of the footing shall be included in the overturning-stability analysis and the structural design of the footing.

409-5.03(10) Minimum Footing Thickness

The minimum thickness shall be 1.5 ft.

409-5.03(11) Piles

A footing on piles shall be analyzed to consider the structural contribution of the concrete below the tops of the piles. Bottom-mat reinforcement shall be placed 4 in. above the bottom of the footing.

The pile type shall be based on the recommendations provided in the geotechnical report. Pile spacing shall be as described in Chapter 408. Pile embedment into the footing shall be at least 1.5 ft.

409-5.03(12) Loads

An abutment stem shall be designed for the imposed gravitational loads, weight of the stem, and horizontal loads. The static earth pressure shall be determined in accordance with *LRFD* 3.11 and 11.6.1.2. Passive earth pressure shall not be assumed to be generated by the prism of earth in front of the wall.

409-5.03(13) Details

Figure 409-5A shows typical wingwall details for integral, semi-integral, or non-integral end bents. Figure 409-5E illustrates the preferred methods for determining the geometrics for a flared wingwall for a square structure. Figures 409-5C and 409-5F illustrate this for a structure

skewed to the right. Figures 409-5D and 409-5G illustrate this for a structure skewed to the left. Figure 409-5B provides an example for determining a flared-wing length and elevations.

Figure 409-5H provides suggested typical abutment details.

409-5.03(14) Drainage

Positive drainage shall be provided behind each abutment or wingwall. See the INDOT *Standard Drawings* for a weephole detail. See LRFD 11.6.6 for more information. Drains shall be located in an abutment or wingwall as follows.

1. Abutment with Wingwalls of 15 ft or Shorter. Drains shall be spaced at 12 ft maximum in the abutment. Drains shall be omitted from the wingwalls.

2. Abutment with Wingwalls of Longer Than 15 ft. Drains shall be spaced at 12 ft maximum in the abutment, with a 12-ft maximum distance from the ends of the wingwalls.

3. Location of Drain Outlet. The outlet shall be placed 1 ft above the low-water elevation or the proposed ground-line elevation.

409-5.03(15) Construction Joints

A construction joint type A shall be used for all horizontal construction joints in both the abutment and wingwalls. See the INDOT *Standard Drawings*. Vertical construction joints shall be placed as follows.

1. Abutment. Preferably at 30 ft center to center, with a maximum of 40 ft.

2. Wingwall of 20 ft or Longer. At 20 ft center-to-center and one batter face cut.

3. Wingwall Shorter than 20 ft. In the abutment section so that the combined length of wingwall and abutment between joints is approximately 20 ft.

4. Either the Wingwall or the Abutment. Not less than 1.5 ft from the intersection of batter faces at the top of the footing.

Joints shall not be placed under bridge bearing areas.

The horizontal reinforcing steel shall continue through the construction joint. Vertical bars shall be placed at a minimum of 3 in. from the centerline of the joint.

409-6.0 INTERIOR SUPPORTS

409-6.01 General

409-6.01(01) Types of Interior Supports

1. Extended-Pile or Drilled-Shaft Bent. The economy of a substructure can be enhanced under certain conditions by means of extending a deep foundation, such as a single row of driven piles or drilled shafts above ground level to the superstructure. An extended-pile bent may be of the integral type or the non-integral type. See Figure 409-6A for details.

2. Stem-Type Pier. The types of stem piers are as follows.

    a. Single-Wall. This is a relatively thin wall, set on a single row of piles, a spread footing, or a pile cap with multiple rows of piles. The single-wall is most suitable if its structural height is less than 20 ft. See Figure 409-6B for a wall pier on a single row of piles.

    b. Hammerhead. For a larger structural height or pier width, a hammerhead pier, either with a rectangular or rounded stem, is often more suitable. See Figure 409-6C for a hammerhead pier.

3. Frame Bent. A concrete frame bent may be used to support a variety of superstructures. The columns may be either circular or rectangular in cross section. The columns may be directly supported by the footing or by a partial-height wall. Figures 409-6D and 409-6E illustrate a frame bent. If the columns rest directly on the footing, the footing shall be designed as a two-way slab. Construction joints may be required in the cap if the concrete-shrinkage moment introduced into the columns becomes excessive.

409-6.01(02) Usage

The selection of the interior-support type shall be based on the feature passing beneath the bridge, as follows.

1. Major Water Crossing. A hammerhead, wall, or single round column-type pier supported by a deep foundation or a spread footing on rock is preferred. Multiple round columns may be used, but they may require a solid wall between columns to avoid the collection of debris. This decision shall be coordinated with the Office of Hydraulics. A single-wall pier may be a more suitable alternative.

2. Meandering River. For a meandering river or stream, or where the high flow is at a different skew than the low flow, the most desirable pier type is normally a single, circular pier column.

3. Highway- or Railroad-Grade Separation. A thin-wall or frame bent with multiple columns shall be used. The aesthetics of the pier shall be considered. Solid wall piers under a wide superstructure can lead to a tunnel effect for a motorist passing under the structure, and may require the placement of a lighting system under the structure. Surface treatments using form liners or other means shall be investigated, especially for a wall pier.

409-6.02 Materials

409-6.02(01) Epoxy-Coated Reinforcement Under Expansion Joint

All reinforcing steel in the concrete above the footing, where an expansion joint is located directly over the cap shall be epoxy coated. This includes the stem, cantilevers, and cap. This applies only to a substructure which supports the ends of two superstructure units with an expansion joint located directly over the cap.

409-6.02(02) Concrete

Class A concrete shall be used above the footing. Class B concrete shall be used in the footing.

409-6.03 General Design Considerations

409-6.03(01) Pier in Waterway

A stem-type pier shall have a solid wall to an elevation of 1 ft above the Q_{100} high-water level. Depending on aesthetics and economics, the remainder of the wall may be either solid or

multiple columns. The dimensions of the wall may be reduced by providing cantilevers to form a hammerhead pier. Round noses shall be considered for a pier in a waterway.

409-6.03(02) Roadway-Grade Separation [Rev. Oct. 2012]

A new-bridge pier located within 30 ft of the edge of roadway shall be designed for a vehicular collision-static force of 600 kip, as indicated in *LRFD* 3.6.5.1.

409-6.03(03) Railroad-Grade Separation [Rev. Oct. 2012]

A pier within 25 ft of a present-track or a future-track centerline shall be designed in accordance with the AREMA *Manual for Railway Engineering*.

409-6.03(04) Pier-Cap Reinforcement

Multiple layers of negative-moment reinforcement are permitted to minimize cap dimensions.

409-6.03(05) Column Reinforcement

The area of steel reinforcement provided across the interface between the base of the column or pier stem and the top of footing shall not be less than 0.5% of the gross area of column or stem as described in *LRFD* 5.13.3.8. According to *LRFD* 5.10.11.4.2, the minimum reinforcement ratio, both horizontally and vertically in a pier, shall not be less than 0.0025. The vertical reinforcement ratio shall not be less than the horizontal reinforcement ratio. The reinforcement spacing, either horizontally or vertically, shall not exceed 1’-6”.

409-6.03(06) Reinforcing-Steel Splicing

If a pier-stem height is less than 10 ft, the steel extending out of the footing shall not be spliced. See *LRFD* 5.11.5 for more information.

409-6.03(07) Compression Reinforcement

Compression steel tends to buckle once the concrete cover is gone or where the concrete around the steel is weakened by compression. The criteria shown in *LRFD* 5.7.4.2 and 5.7.4.6 for ties or spirals shall be used. See Figure 409-6G for suggested hammerhead- and wall-type-pier reinforcement in columns without plastic hinging capability. Ties may be #3 bars for longitudinal bars up to size #10.

Where column and pier-wall reinforcement is controlled by seismic requirements, see the AASHTO *Guide Specifications for LRFD Seismic Bridge Design* Articles 8.6 and 8.8 for limits of reinforcement.

409-6.03(08) Piles

For a pier on multiple rows of piles with a footing, pile embedment shall be at least 1.5 ft inside the footing. Bottom-mat reinforcement shall be placed 4 in. above the bottom of the footing.

For a pier on a single row of piles, pile embedment inside the wall shall be 5 ft.

409-6.04 Specific Design Considerations

409-6.04(01) Extended-Pile Bent

1. Limitations. This type of support has little resistance to longitudinal forces, particularly seismic forces, and shall not be used unless such forces are resisted by other substructure units such as integral end bents or abutments. This support shall also not be used if the stream carries large debris, heavy ice flow, or large vessels. If steel H-piles are used for support, they shall be encased in concrete. The concrete encasement shall be extended to 2 ft below the flow-line elevation. Encasement details are provided on the INDOT *Standard Drawings*. Scour shall be considered in establishing design pile lengths and for the structural design of the piles.

2. Cap Beam. Extended piles require a cap beam for structural soundness, which may be an integral part of the superstructure. Extended drilled shafts shall be arranged to support, for example, widely-spaced beams without the presence of a cap beam if sufficient space is provided at the top for mandatory jacking operations.

3. Loads. Girders may be fixed or semi-fixed at an extended pile bent. Because the piles are relatively flexible compared to the end bent or abutment, the force effects induced in the piles by lateral displacement is small. Where practical, one pile shall be placed beneath each girder. The vertical load carried by the piles shall be the girder reaction and the appropriate portion of the pile-cap dead load. Assuming the bent acts as a rigid frame in a direction parallel to the bent, force effects due to lateral displacement and lateral loads may be uniformly distributed among the extended piles.

4. Cap Design. The minimum reinforcement shall be #5 bars at 1'-0" spacing on all faces, and shall be in accordance with *LRFD* 5.7.3.3. The cap shall be designed as a continuous beam.

409-6.04(02) Hammerhead Pier

1. Cofferdam. If a cofferdam is anticipated to be required, the hammerhead portion of the pier shall be above the average low-water level of the stream.

2. Bottom Elevation. The bottom of the hammerhead portion shall be a minimum of 6 ft above the finished ground line at a stream crossing to help prevent debris accumulation.

3. Effective-Length Factor. *LRFD* Table 4.6.2.5-1 provides criteria for the effective length factor, *K*. For beams on rockers or sliding bearings, *K* shall be taken as 2.1. For an expansion pier with beams on a single row of neoprene pads, *K* shall be taken as 1.5. For prestressed-concrete beams on semi-fixed bearings on a fixed pier, *K* shall be taken as 1.2. *K* shall be taken as 1.0 for the strong or transverse direction.

4. Pier Wall. A pier wall shall be designed as columns for biaxial bending. See *LRFD* 5.7.4.5 for more information.

409-6.04(03) Frame Bent

1. Column Fixity. The columns founded on a spread- or multiple-piles footing shall be assumed to be fixed at the bottom.

2. Cantilevered Cap. The moments used for the cap design shall be calculated at the face of the support for a square or rectangular column, or at the theoretical face of a circular column.

3. Effective-Length Factor. The same *K* factors shall be taken as described for a hammerhead pier in Section 409-6.04(02), in the weak, or longitudinal, direction. *K* shall be taken as 1.0 for the strong, or transverse, direction. See *LRFD* 4.6.2.5 for more information.

4. Structural Design. If the number of columns is kept to a minimum, and the components are reasonably small, frame analysis is both appropriate and safe for a frame bent.

409-6.04(04) Compression

Reinforced-concrete piers, pier columns, and piles are referred to as compression members although their design is normally controlled by flexure. Tall, slender columns or pier shafts are relatively rare due to topography. The use of the moment magnification approach in *LRFD* 5.7.4.1 is most-often warranted. For exceptionally tall or slender columns or shafts, a refined analysis, as outlined in *LRFD* 5.7.4.1, shall be performed.

For limits of reinforcement in compression members, see *LRFD* 5.7.4.

409-6.05 Details

409-6.05(01) Size

Columns can be rectangular, square, or round, with a minimum diameter or thickness of 2 ft. Diameter increments shall be in multiples of 0.5 ft. A solid pier wall shall have a minimum thickness of 2 ft, and may be widened at the top to accommodate the bridge seat.

409-6.05(02) Cap Extension

The width of the cap shall project beyond the sides of the columns. The added width of the cap shall be a minimum of 1½ in. on the outside the columns. This width will reduce the reinforcement interference between the column and cap. The cap shall have cantilevered ends to balance positive and negative moments in the cap.

409-6.05(03) Step Cap

Where one end of the cap is on a considerably different elevation than the other, the difference shall be accommodated by means of increasing the column heights as shown in Figure 409-6F. The bottom of the cap shall be sloped at the same rate as the cross slope of the top of the bridge deck. The top of the cap shall be stepped to provide level bearing surfaces.

409-6.05(04) Construction Joints

A construction joint type A shall be used for all horizontal construction joints. See the INDOT *Standard Drawings*.

409-6.05(05) Reinforcement Clearance

The reinforcement clearances shall be checked to ensure that there is adequate space for the proper placement of the concrete during construction.

409-6.05(06) Backfill

An interior bent or pier at the base of a slopewall shall be backfilled with structure backfill as shown on the INDOT *Standard Drawings*. For an interior bent or pier adjacent to a railroad track, the area shall be backfilled with structure backfill to a point 1.5 ft outside the neat lines of the footing. Structure backfill shall not be provided as backfill material around a pier that is located in a stream.

409-7.0 BEARINGS

409-7.01 General

Bearings ensure the functionality of a bridge by allowing translation and rotation to occur while supporting the vertical loads. However, the use of integral end bents and possibly integral piers shall be considered prior to deciding upon the use of bearings to support the structure.

409-7.01(01) Movement

Movement shall be considered. Movement includes both translations and rotations. The sources of movement include bridge skew and horizontal-curvature effects, initial camber or curvature, construction loads, misalignment or construction tolerances, settlement of supports, thermal effects, creep, shrinkage, or traffic loading. Bearing pads on a skewed structure shall be oriented parallel to the principal rotation axis.

409-7.01(02) Effect of Bridge Skew and Horizontal Curvature

A skewed bridge moves both longitudinally and transversely. The transverse movement becomes significant on a bridge with a skew angle of greater than 20 deg and bearings not oriented parallel to the movement of the structure.

A curved bridge moves both radially and tangentially. These complex movements are predominant in a curved bridge with a small radius and with an expansion length of longer than 200 ft.

409-7.01(03) Thermal Effects

Thermal translation, Δo, is estimated as follows:

$$\Delta o = \alpha L \Delta T$$

where L is the expansion length, α is the coefficient of thermal expansion of 6.0×10^{-6}/°F for normal-density concrete, or 6.5×10^{-6}/°F for steel, and ΔT is the change in the average bridge temperature from the installation temperature.

A change in the average bridge temperature causes a thermal translation. A change in the temperature gradient induces bending and deflections. The design temperature changes are specified in *LRFD* 3.12. Maximum and minimum bridge temperatures are defined depending upon whether the location is viewed as a cold or moderate climate. Indiana is considered a cold climate. See *LRFD* 3.12 for temperature-range values. An installation temperature of 60 °F shall be assumed. The change in average bridge temperature, ΔT, between the installation temperature and the design extreme temperature is used to compute the positive and negative movements. A given temperature change causes thermal movement in all directions. This means that a short, wide bridge can experience greater transverse movement than longitudinal movement.

409-7.01(04) Loads and Restraint

Restraint forces occur if part of a movement is prevented. Forces due to direct loads include the dead load of the bridge and loads due to traffic, earthquakes, water, or wind. Temporary loads due to construction equipment and staging also occur. The majority of the direct design loads are reactions of the bridge superstructure on the bearing. Therefore, they can be estimated from the structural analysis. The applicable *LRFD* load combinations shall be considered.

409-7.01(05) Serviceability, Maintenance, and Protection Requirements

Bearings under a deck joint collect large amounts of dirt and moisture, which promotes problems of corrosion and deterioration. As a result, such bearings shall be designed and installed to have the maximum possible protection against the environment and to allow easy access for inspection.

The service demands on bridge bearings are severe and result in a service life that is typically shorter than that of other bridge elements. Therefore, allowances for bearing replacement shall be part of the design process. Lifting locations shall be provided to facilitate removal and re-installation of bearings without damaging the structure. No additional hardware shall be necessary for this purpose. The primary requirements are to allow space suitable for lifting jacks based on the original design and to use devices that permit quick removal and replacement of the bearing.

409-7.01(06) Clear Distance

The minimum clear distance between the bottom shoe of a steel bearing and the edge of the bearing seat or cap shall be 3 in. For an elastomeric pad resting directly on the concrete bridge seat, the minimum edge distance shall be 6 in. under a deck expansion joint, or 3 in. with 4 in. desirable for all other locations. Seismic support lengths shall also be checked.

409-7.01(07) Bearing Selection

Bearing selection is influenced by factors such as loads, geometry, maintenance, available clearance, displacement, rotation, deflection, availability, policy, designer preference, construction tolerances, or cost.

Vertical displacements are prevented, rotations are allowed to occur as freely as possible, and horizontal displacements may be either accommodated or prevented. The loads shall be distributed among the bearings in accordance with the superstructure analysis.

Unless conditions dictate otherwise, conventional steel-reinforced elastomeric bearings shall be used for a girder bridge. Where the practical limits of an elastomeric bearing pad are exceeded, flat polytetrafluorethylene (PTFE) slider plates shall be considered in conjunction with a steel-reinforced elastomeric bearing. See Figure 409-7A for a general summary of expansion-bearing capabilities. The values shown in the figure are for guidance only.

The final step in the selection process consists of completing a design of the bearing in accordance with *LRFD* 14.7. The resulting design will provide the geometry and other pertinent specifications for the bearing.

For a structure widening, bearing types shall not be mismatched. Yielding type bearings, such as elastomeric, shall not be used in conjunction with steel rockers or other non-yielding type bearings.

A steel-beam bridge without integral end bents must have at least one fixed bearing line. Due to the presence of the interior-diaphragm keyway, semi-fixed interior supports are allowed for a prestressed-concrete beams bridge. If integral end bents in accordance with the empirical design limits are used, interior fixed bearings are not required.

409-7.01(08) Anchor Plates and Anchor Bolts

Anchor plates shall be used only to attach the bottom steel shoe of an expansion bearing to the concrete beam seat. Anchor bolts shall be used to connect fixed steel bearings to the concrete beam seat.

409-7.02 Elastomeric Bearing Pads and Steel-Reinforced Elastomeric Bearings

Elastomers are used in both elastomeric bearing pads and steel-reinforced elastomeric bearings. The behavior of both pads and bearings is influenced by the shape factor, *S*, as shown in *LRFD* 14.7.5.1.

Elastomeric bearing pads and steel-reinforced elastomeric bearings have fundamentally different behaviors and, therefore, they are discussed separately. Elastomeric pads and bearings shall be

oriented so that the long side is parallel to the principal axis of rotation, as this facilitates the accommodation of rotation.

Holes shall not be placed in an elastomeric bearing pad due to increased stress concentrations around the hole. These increased stresses can cause tearing of the elastomer during an extreme event, such as an earthquake. If holes are placed in a steel-reinforced bearing, the steel-reinforcement thickness shall be increased in accordance with *LRFD* 4.7.5.3.7.

409-7.02(01) Elastomer

For details and material properties of elastomeric bearings, see the INDOT *Standard Drawings*, and INDOT *Standard Specifications*, respectively.

409-7.02(02) Steel-Reinforced Elastomeric Bearing Pad

For design requirements, see *LRFD* 14.7.6.

409-7.02(03) Elastomeric Bearing Pad

For design requirements for PEP, FGP, and CDP bearing pads, see *LRFD* 14.7.6.

409-7.03 Standardized Elastomeric Bearing Pads and Assemblies

Standardized elastomeric bearing pads and assemblies have been developed for use with AASHTO prestressed-concrete I-beams, Indiana prestressed-concrete bulb-tee beams, prestressed-concrete hybrid bulb-tee beams, prestressed-concrete spread and adjacent box beams, and structural-steel members. They have been designed based on *LRFD* 14.7.6, Design Method A.

409-7.03(01) Standard Pad and Assembly Types

1. AASHTO Prestressed-Concrete I-Beam. Elastomeric bearing pads are designated as type 1, 2, 3, or 4 for this type of member. The details are shown on the INDOT *Standard Drawings*.

2. Prestressed-Concrete Box Beam. Elastomeric bearing pads are designated as type 5, 6, or 7, and shape A or B, for this type of member. For a spread box beam, shape A or B may be used. For an adjacent interior box beam, shape A shall be used. For the outside edge under an adjacent exterior box beam, shape B shall be used. The details are shown on the INDOT *Standard Drawings*.

3. Prestressed-Concrete Bulb-Tee Beam. Elastomeric bearing pads are designated as type T, and shape 1, 2, 3, or 4, for this type of member. The details are shown on the INDOT *Standard Drawings*.

4. Prestressed-Concrete Wide Flange Bulb-Tee Beam. Elastomeric bearing pads are designated as type TH, and shape 5, 6, 7, or 8, for this type of member. The details are shown on the INDOT *Standard Drawings*.

5. Steel Beam or Girder. Elastomeric bearing assemblies are designated as type S, with bearing-area designation 1, 2, 3, 4, 5, 6, or 7, and effective-elastomer-thickness designations a or b, for this type of member. The details and designations are shown on the INDOT *Standard Drawings*.

The locations of elastomeric-bearing devices shall be shown on the plans with their type and shape designations. However, they are not separate pay items.

409-7.03(02) Design Parameters

The design of bearing devices is governed by the parameters as follows:

1. dead-load plus live-load reaction at service limit state, impact not included;

2. expansion length, or distance from fixed support to expansion support; and

3. grade percentage due to nonparallel surfaces, considering dead-load rotation, profile grade of member, and camber of member.

409-7.03(03) Determining Standard Bearing-Device Type [Rev. May 2013]

The procedure for determining the applicable standard elastomeric bearing device is the same for each structural-member type.

Determine the dead-load plus live-load reaction, and calculate the maximum expansion length for the bridge at the support for which the device is located. Then enter Figure 409-7B, 409-7C, 409-7D, or 409-7E, Elastomeric Bearing Pad or Assembly Types, Properties, and Allowable Values, for the appropriate structural-member type, with the reaction and maximum expansion length. The required bearing-device size is that which corresponds to the reaction and expansion-length values shown in the figure which are less than or equal to those determined. If the reaction or expansion length is greater than the figure's value, use the next larger device size. If the reaction or expansion length is greater than the maximum value shown on the figure, the pad must be properly resized and designed.

The maximum service limit state rotation due to total load, Θ_s, shall be calculated in accordance with *LRFD* 14.4.2.1.

The requirement for a tapered plate shall be determined in accordance with *LRFD* 14.8.2. See Figure 409-7F for a typical elastomeric bearing pad with tapered steel plate. Stainless steel should be considered only when located beneath an expansion joint. When a stainless steel tapered plate is specified, the steel plate cast with the beam, steel stud, and welds must also be specified as stainless steel.

409-7.04 Nonstandardized Elastomeric Bearing Device

The design shall be based on *LRFD* 14.7.6, Method A.

Each pad or assembly shall be sized according to the load capacities and expansion lengths that it can accommodate.

An elastomeric bearing device not shown on the INDOT *Standard Drawings* may be used if its parameters check, or its design is in accordance with *LRFD* 14.7.6. *LRFD* defines certain limitations in terms of allowable stresses, movements, or minimum dimensions. These limitations are as follows.

1. Shear Modulus. See *LRFD* 14.7.6.2. The design of an elastomeric bearing pad shall include, but shall not be limited to, the consideration of increased *G* at a temperature below 73 °F; see *LRFD* 14.6.3.1.

2. Design Shear Force. The elastomer with the lowest temperature tolerance shall be used. The total elastomer thickness shall be sufficient to resist twice the design shear force.

3. Relationship of Device Dimensions. Both the width and the length of the device shall be at least three times the total thickness of the pad. For a circular pad, the diameter of the pad shall be at least four times the total thickness of the pad.

4. Stress Due to Dead Load Plus Live Load without Impact. This stress shall be less than or equal to the lesser of 1.25 ksi or 1.25*GS*.

5. Rotational Deflection. Sufficient pad thickness or a beveled plate shall be provided to prevent a liftoff condition on the leading edges of the device.

6. Anchorage. The pad or assembly shall be secured against seismic or other extreme-event resistant anchorage to defy the horizontal movement in excess of that accommodated by shear in the pad, unless it is intended to act as a fuse as required by *LRFD* 14.7.6.3.8. The calculations are performed in the Strength-Limit state. The load modifiers for ductility (*LRFD* 1.3.3), redundancy (*LRFD* 1.3.4), and importance (*LRFD* 1.3.5) must be accounted for.

409-7.05 Connections for Elastomeric Bearing or PTFE Bearing

An elastomeric bearing or PTFE bearing shall be provided with adequate seismic-resistant anchorage to resist the transverse horizontal forces in excess of those accommodated by shear in the bearing. The restraint may be provided by one of the methods as follows:

1. steel side retainers with anchor bolts;

2. concrete shear keys placed in the top of the pier cap, or channel slots formed into the top of the cap or mudwall at the end bent; or

3. concrete channels formed in the top of the end bent cap or expansion pier cap.

Steel side retainers and anchor bolts shall be designed to resist the minimum transverse seismic force for the seismic category in which the bridge is located. The number of side retainers shall be as required to resist the seismic forces. They shall be placed symmetrically with respect to the cross section of the bridge. Side retainers will often be required on each side of the girder flange of each beam line. The strength of the beams and diaphragms shall be sufficient to transmit the seismic forces from the superstructure to the bearings. A minimum of two anchor bolts of 1 in. diameter shall be provided for each side retainer.

Concrete channels formed around each beam in the top of the end bent cap or expansion pier cap represent an acceptable alternative to steel side retainers. The top of the top shoe shall be set a

minimum of 4 in. below the top of the concrete channel. If a top shoe is not present, the bottom of the beam shall be placed 4 in. below the top of the channel. The minimum depth of the channel shall be 6 in. The horizontal clearance from the side of the top shoe or edge of the beam to the side wall of the channel shall be at least 1 in.

Integral end bents are an effective way of accommodating horizontal seismic forces. An integrally-designed end bent will inherently resist the transverse seismic forces.

409-7.06 Shear Keys at Semi-Fixed Support

Unreinforced shear keys shall be provided between the beams at each semi-fixed supports. The shear keys rest in recessed keyways of 1 ft width by 3 ft length by 3 in. depth, the edges of which are also unreinforced. Although the shear keys are not structurally designed, they are expected to adequately resist the anticipated horizontal seismic forces.

To ensure that the shear keys will function as intended, keyways shall be provided between each beam line at each semi-fixed support, and an expanded-polystyrene sheet, with a maximum thickness of 1/2 in., shall be provided in the bottom of the keyway resulting in a minimum shear-key extension of 2 1/2 in. into the keyway.

Seismic restraint for an adjacent-box-beams bridge shall be provided with retaining blocks at the ends of the pier caps and end bent caps. The blocks shall be designed as reinforced shear keys and shall be in accordance with *LRFD* 5.8.4.

409-7.07 Fixed Steel Bearing

The top shoe of a steel bearing shall be at least as wide as the beam flange, but not more than 2 in. wider. The maximum reaction is shown for each shoe type on the INDOT *Standard Drawings*. An independent design is required if the design reaction is greater than the maximum reaction shown, or if the beam or girder flange width is not in accordance with the *Standard Drawings*.

If the flexibility of tall, slender piers is sufficient to absorb the horizontal movement at the bearings due to temperature change without developing undue force in the superstructure, the bearings, one pier, or two or more piers, may be fixed to distribute the longitudinal force among the piers.

The connection between a fixed steel shoe and the pier cap shall be made with anchor bolts. The ultimate shear resistance in the anchor bolts, pintles, and high-strength bolts in the top shoe shall be verified that it is adequate to resist the calculated seismic forces. See *LRFD* 6.13.2.7 and Figure 409-7G for determining the nominal shear resistance of anchor bolts and pintles. The minimum connections shall be as shown in Figure 409-7 I.

Masonry anchor bolts shall extend into the concrete a minimum of 1'-3". Anchor bolts shall be in accordance with *LRFD* 14.8.3.

Anchor bolts shall be located beyond the limits of the bottom beam flange and interior diaphragm to ensure adequate clearance for anchor-bolt installations and impact wrenches. The grade of structural steel used for the anchor bolts or pintles shall be shown on the plans.

Where the pintles cannot be designed to accommodate the minimum seismic force of seismic category A, a hooded top shoe as shown in Figure 409-7 I shall be provided. A hooded top shoe is also an acceptable seismic restrainer. If seismic forces are large, a restraining device will be required instead of the hooded shoe.

409-7.08 Pot Bearing

A fixed pot bearing shall be in accordance with the connection requirements for a fixed steel shoe. The top bearing plate and lower masonry plate shall be bolted to the beam flange and the pier cap respectively. Where welds are required between plates in the pot bearing, they shall be made continuous around the perimeter of the smaller plate.

409-7.09 Miscellaneous Bearing-Connection Details

The following figures provide suggested details for acceptable connections for bearing assemblies.

1. For a fixed-shoe assembly, see Figure 409-7 I.

2. For an elastomeric bearing assembly, see Figures 409-7J, 409-7K, and 409-7L.

3. For a PTFE bearing assembly, see Figure 409-7M.

The suggested details may be revised as necessary for each project. Also, see the INDOT *Standard Drawings* for more bearing details.

409-8.0 BRIDGE-SEAT ELEVATIONS

In establishing bridge-seat elevations at both end and interior supports, the following shall be considered.

1. Bridge-deck depth.

2. Fillet of ¾ in. The fillet distance is measured from bottom of the deck to the top of beam. This distance is included to allow for variation in beam camber.

3. Residual beam camber.

4. Vertical curve effect: + for sag vertical curve, - for crest vertical curve.

5. Beam depth.

6. Middle-span correction for curved bridge with straight beams. Due to the distance variation from the bridge centerline and beam centerline, this shall appear at the supports and at the middle of the span.

7. Bearing thickness, including shims and taper plate.

The accuracy for establishing bridge-seat elevations shall be to the nearer 0.001 ft.

409-9.0 REFERENCES [Rev. Oct. 2012]

AASHTO. *LRFD* Bridge Design Specifications, 2012, American Association of State Highway and Transportation Officials, Washington, DC.

AASHTO, 2009 Guide Specifications for LRFD Seismic Bridge Design, Edition 1 with all subsequent Interim Revisions, American Association of State Highway and Transportation Officials, Washington, DC.

NHI course No. 130082A, LRFD for Highway Bridge Substructures and Earth Retaining Structures, 2006, with all subsequent Revisions, US Department of Transportation, Federal Highway Administration.

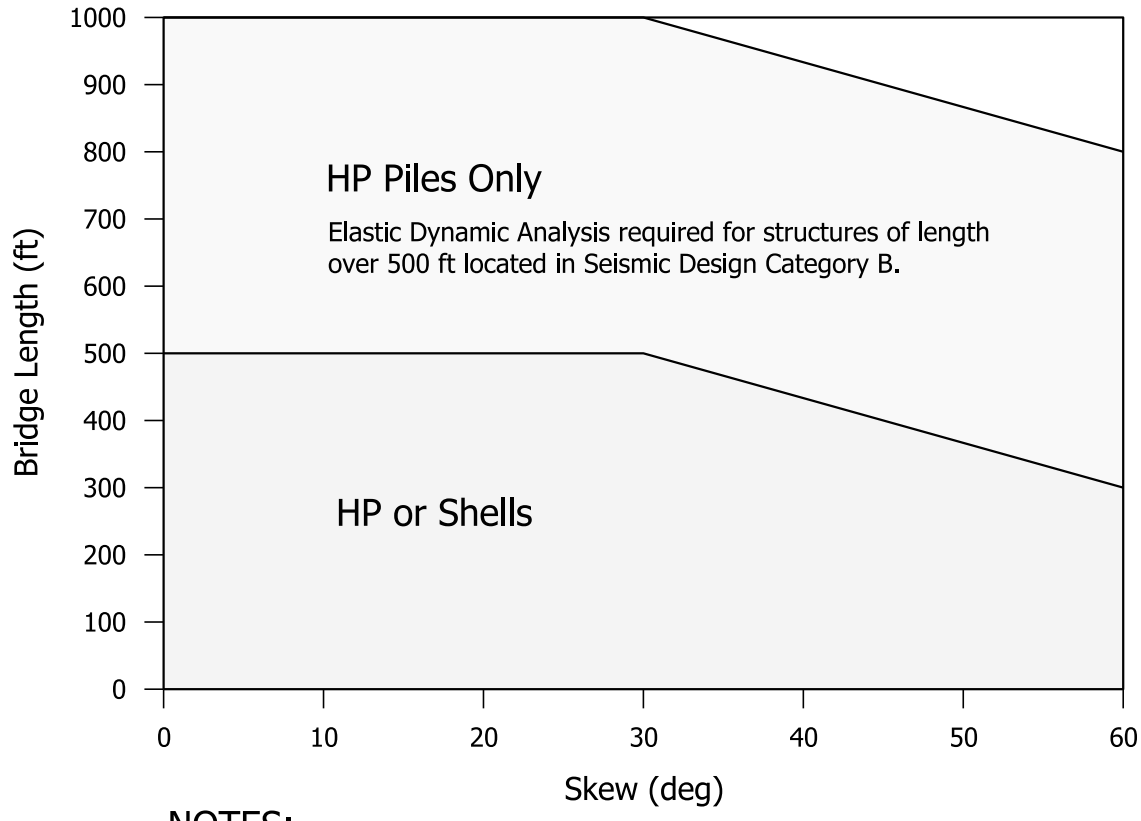

NOTES:

1. Integral end bents may be used in a curved-alignment or curved-girder structure with length of 500 feet or less, with a subtended angle in plan not greater than 30°.

2. Pile confinement spiral reinforcement required on all integral end bents.

USE OF INTEGRAL END BENT

Figure 409-2A

Back

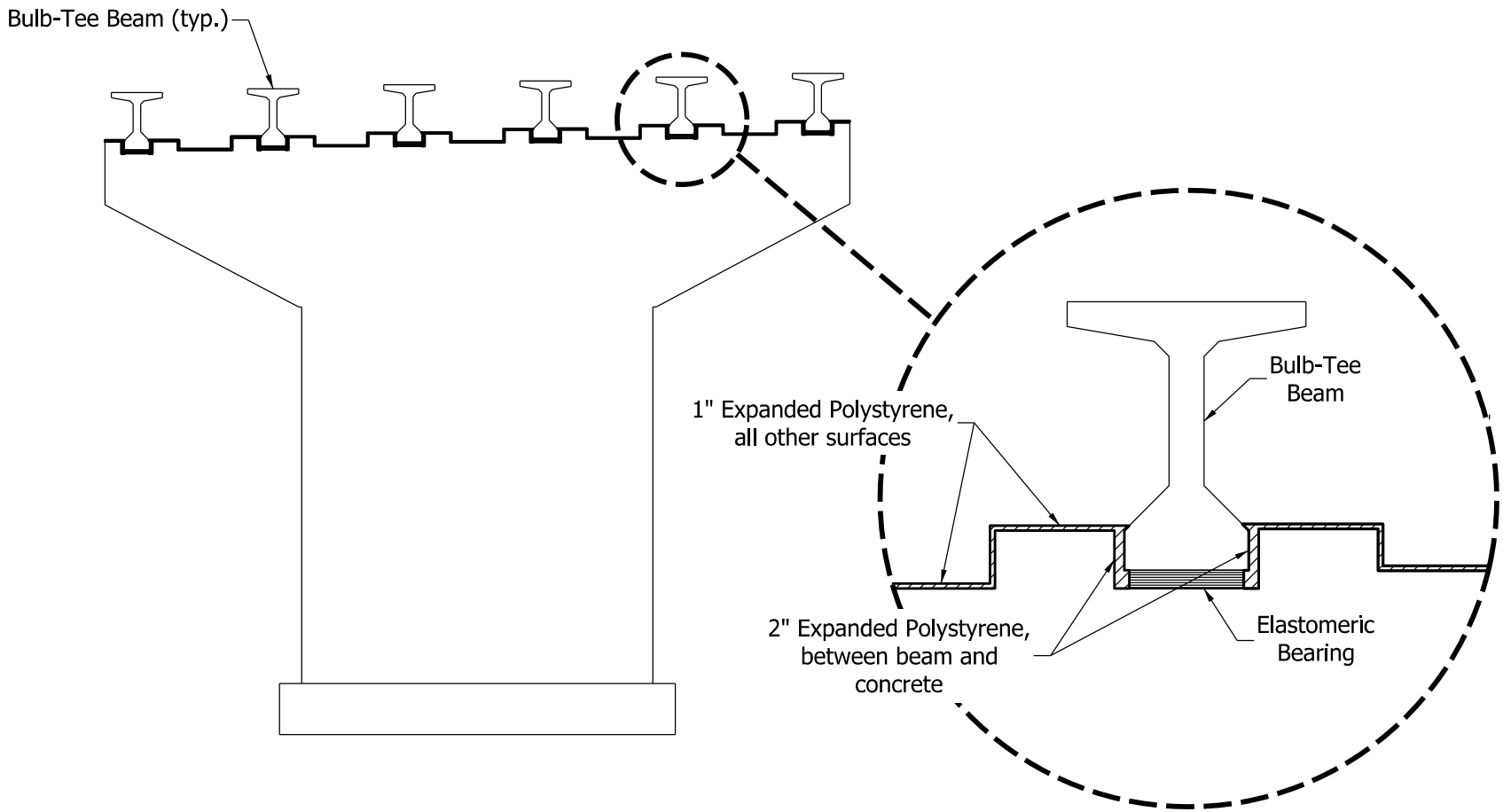

INTERMEDIATE PIER DETAIL FOR INTEGRAL STRUCTURE
LOCATED IN SEISMIC AREA WITH SEISMIC-DESIGN CATEGORY GREATER THAN A

Figure 409-2B

Back

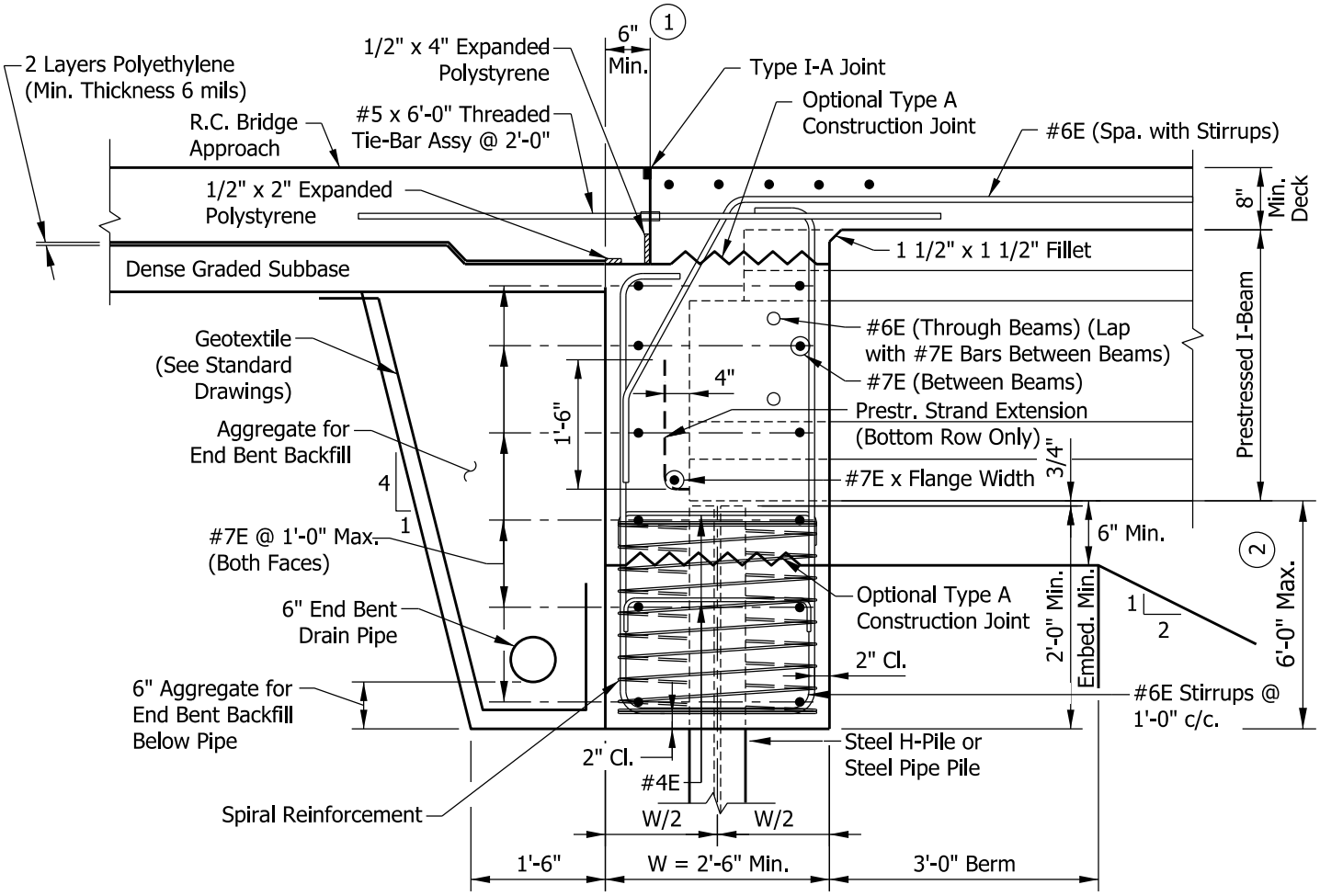

PRESTRESSED CONCRETE I-BEAM

NOTES:

1. A pavement ledge greater than 6 in. may be considered for skewed structures or structures subject to significant truck traffic.
2. A depth greater than 6 ft requires approval from the Office of Bridge Design.
3. All reinforcing steel shall be epoxy coated.

SUGGESTED INTEGRAL END BENT DETAILS
Method A, Beams Attached Directly to Piling

Figure 409-2C
(Page 1 of 4)

Back

NOTE: All reinforcing steel shall be epoxy coated.

Reinforcing details, backfill behind end bent and similar details are as shown on the prestressed concrete I-beam section unless otherwise noted.

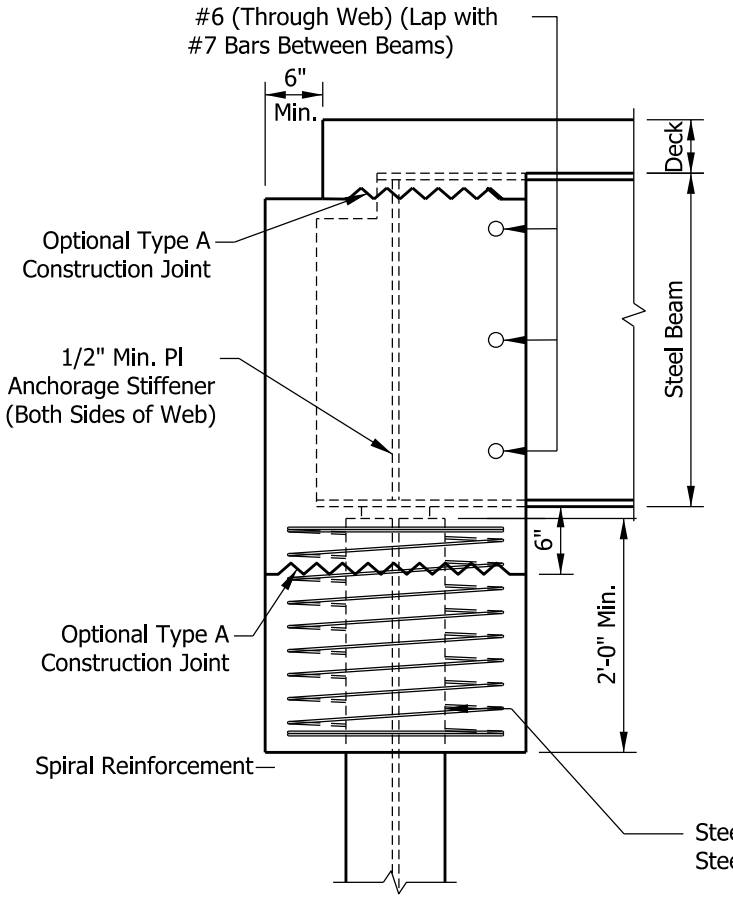

STEEL BEAM OR GIRDER

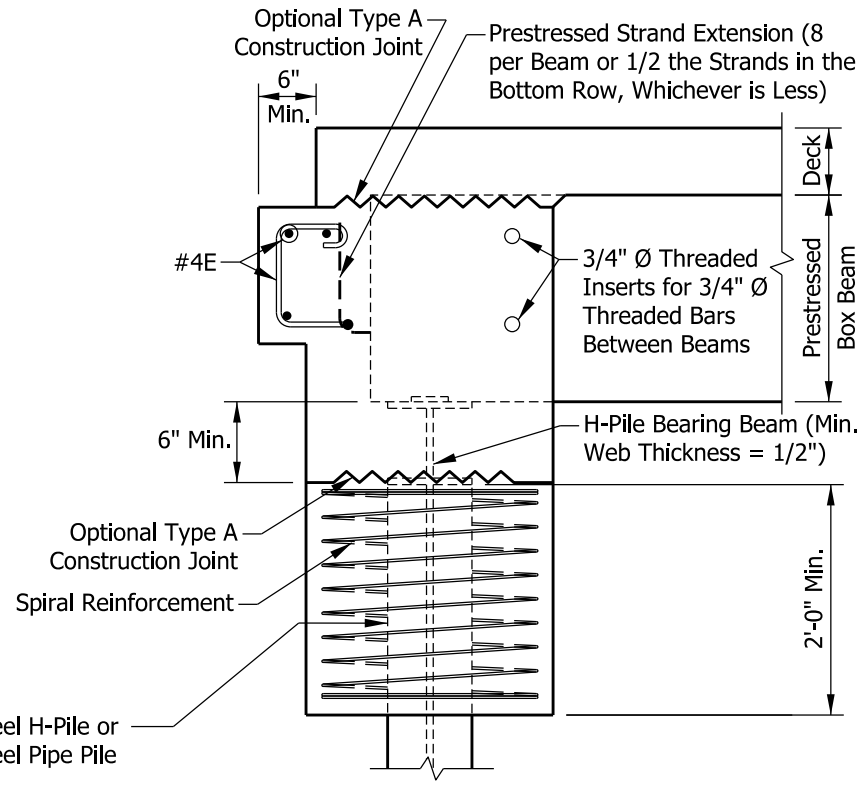

PRESTRESSED CONCRETE BOX BEAM

SUGGESTED INTEGRAL END BENT DETAILS
Method A, Beams Attached Directly to Piling

Figure 409-2C
(Page 2 of 4)

Back

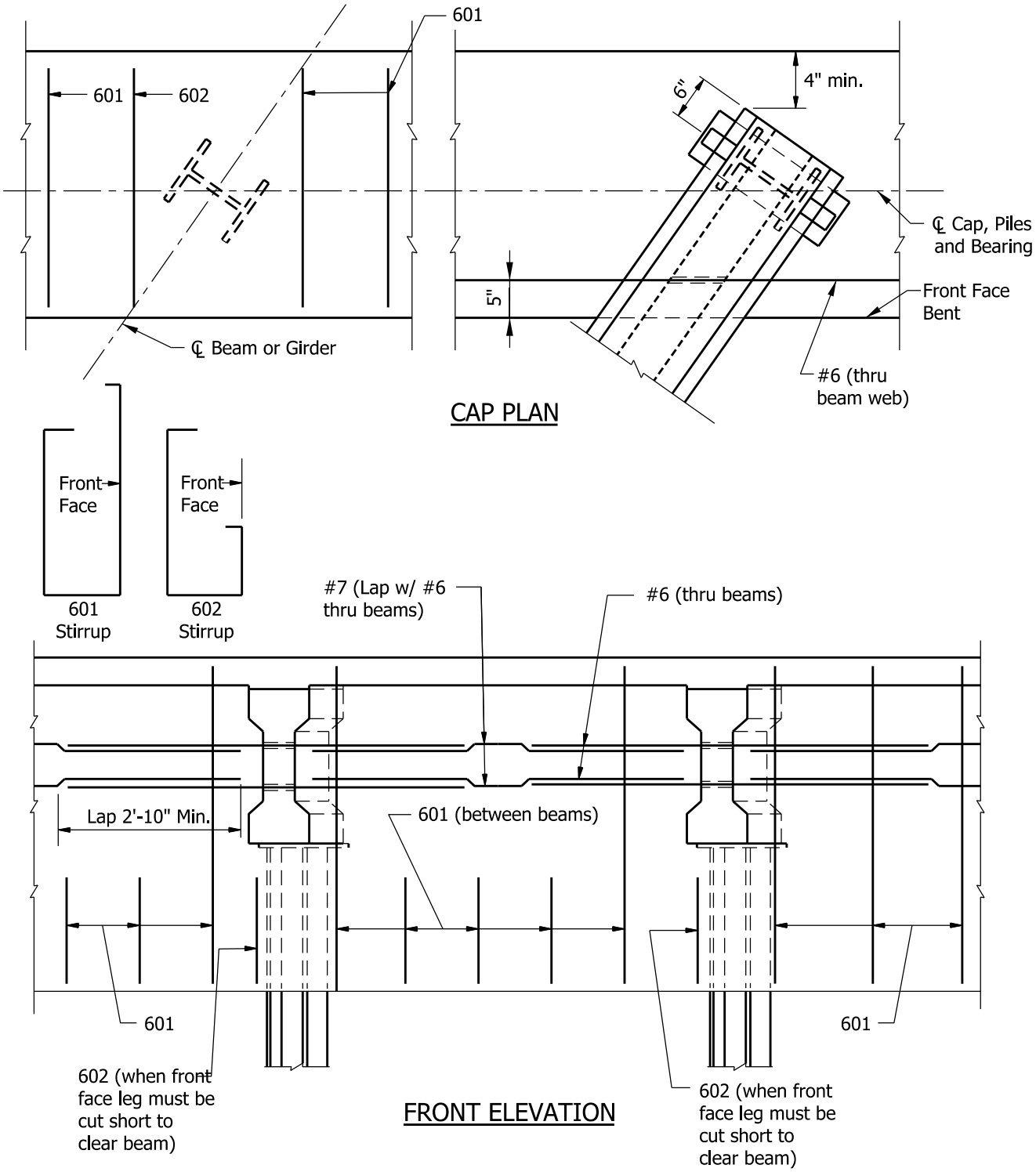

SUGGESTED INTEGRAL END BENT DETAILS
Method A, Beams Attached Directly to Piling

Figure 409-2C
(Page 3 of 4)

Back

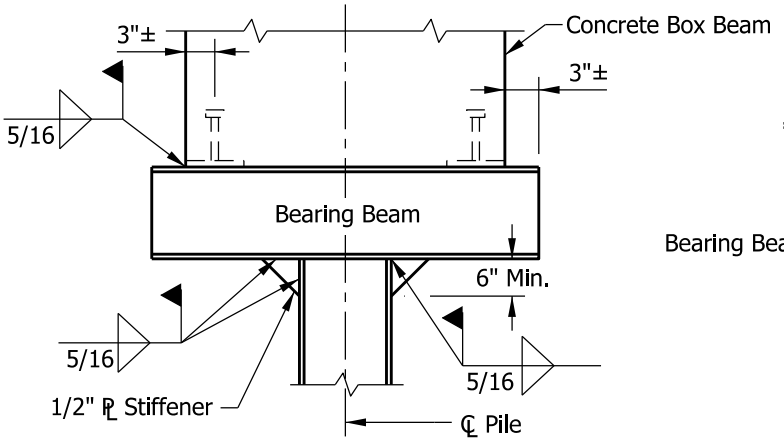

CONCRETE BOX BEAM
END VIEW

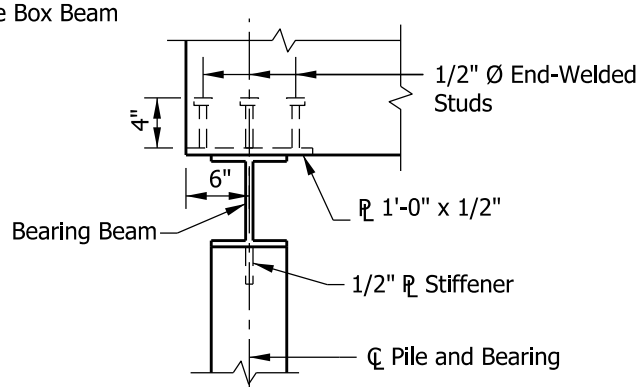

CONCRETE BOX BEAM
SIDE VIEW

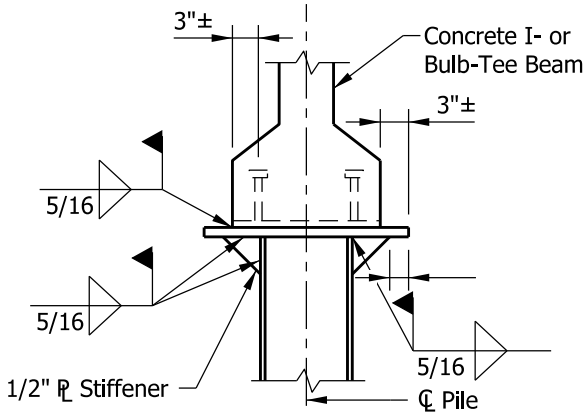

CONCRETE I- OR BULB-TEE BEAM
END VIEW

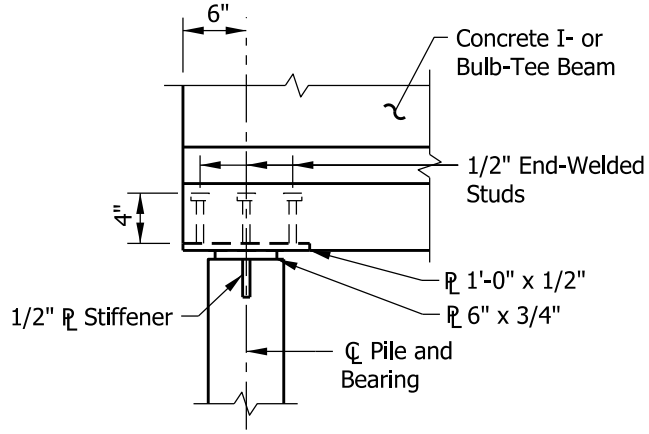

CONCRETE I- OR BULB-TEE BEAM
SIDE VIEW

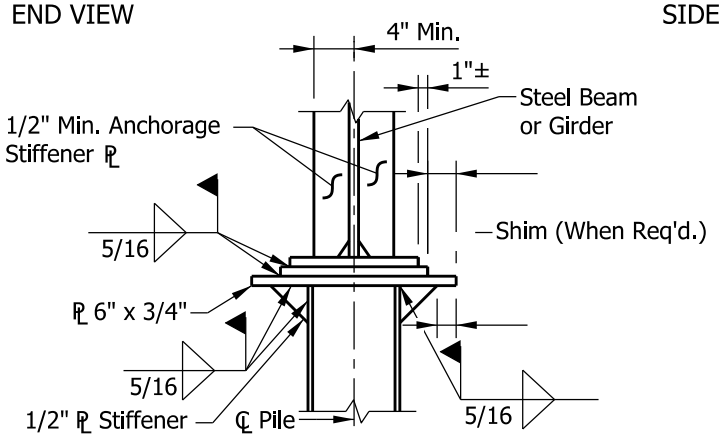

STEEL BEAM
END VIEW

SUGGESTED INTEGRAL END BENT DETAILS
Method A, Beams Attached Directly to Piling

Figure 409-2C
(Page 4 of 4)

Back

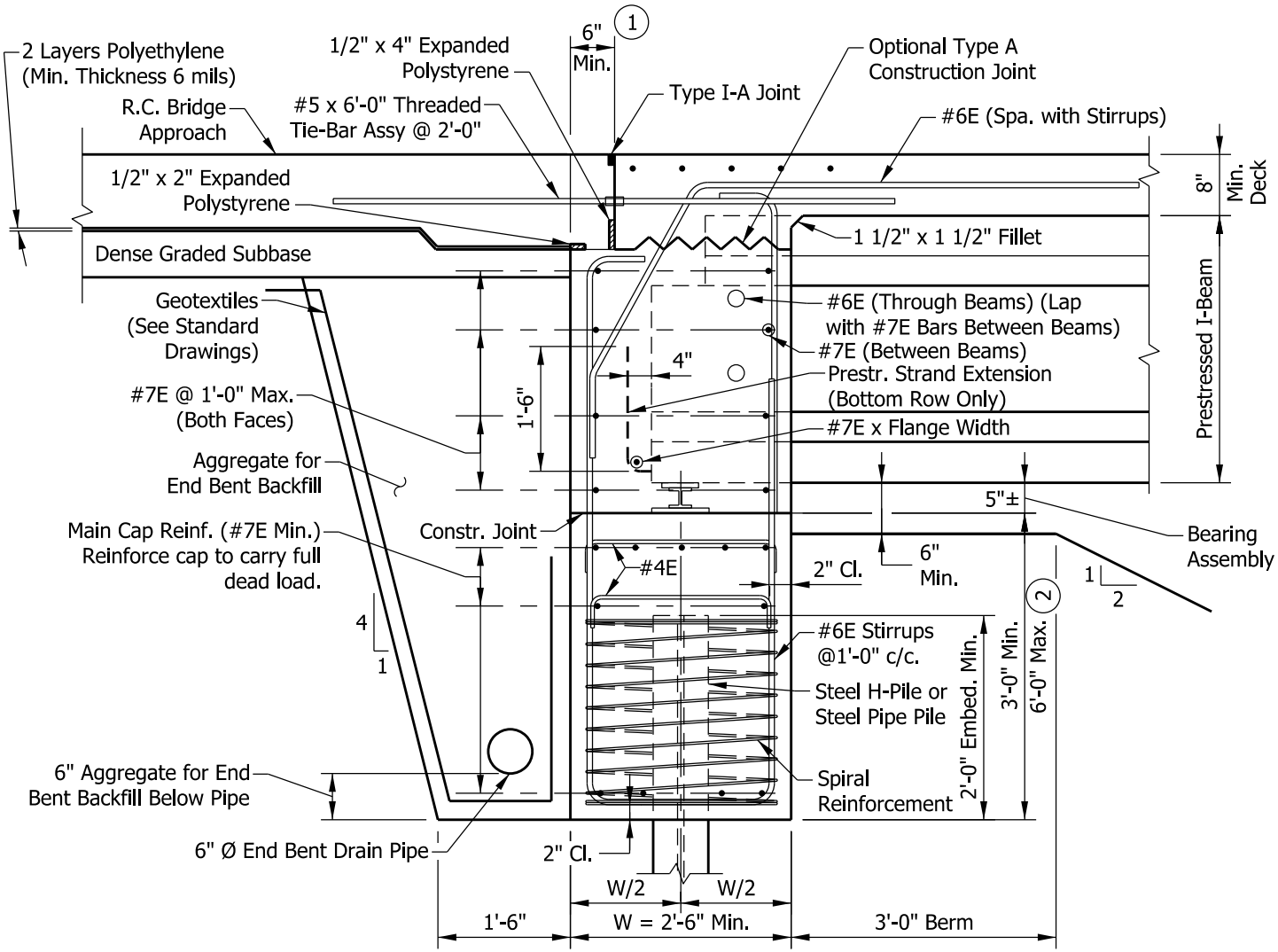

PRESTRESSED CONCRETE I-BEAM

NOTES:

1. A pavement ledge greater than 6 in. may be considered for skewed structures or structures subject to significant truck traffic.
2. A depth greater than 6 ft requires approval from the Office of Bridge Design.
3. All reinforcing steel shall be epoxy coated.

SUGGESTED INTEGRAL END BENT DETAILS
Method B, Beams Attached to Concrete Cap

Figure 409-2D
(Page 1 of 4)

Back

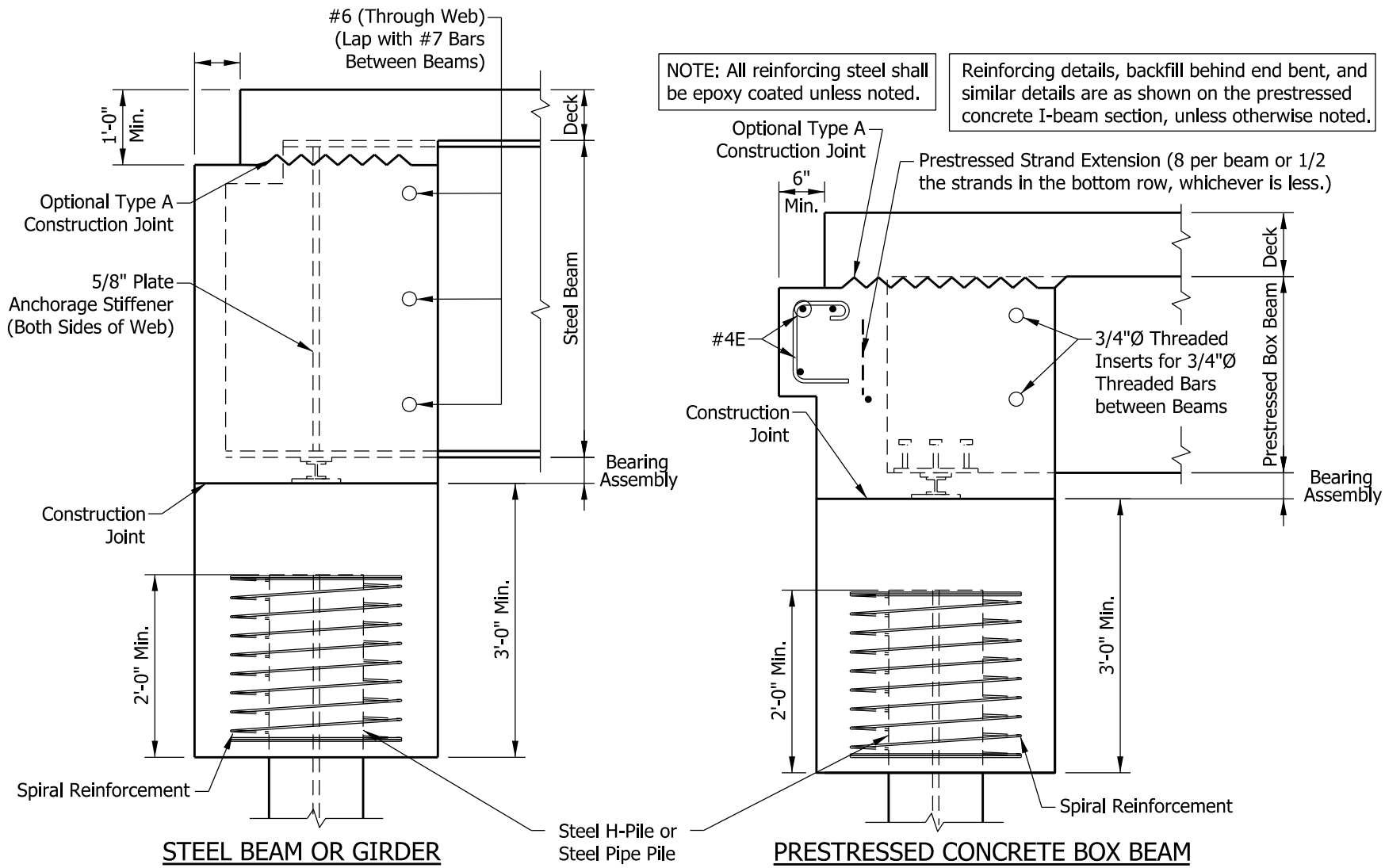

SUGGESTED INTEGRAL END BENT DETAILS
Method B, Beams Attached to Concrete Cap

Figure 409-2D
(Page 2 of 4)

Back

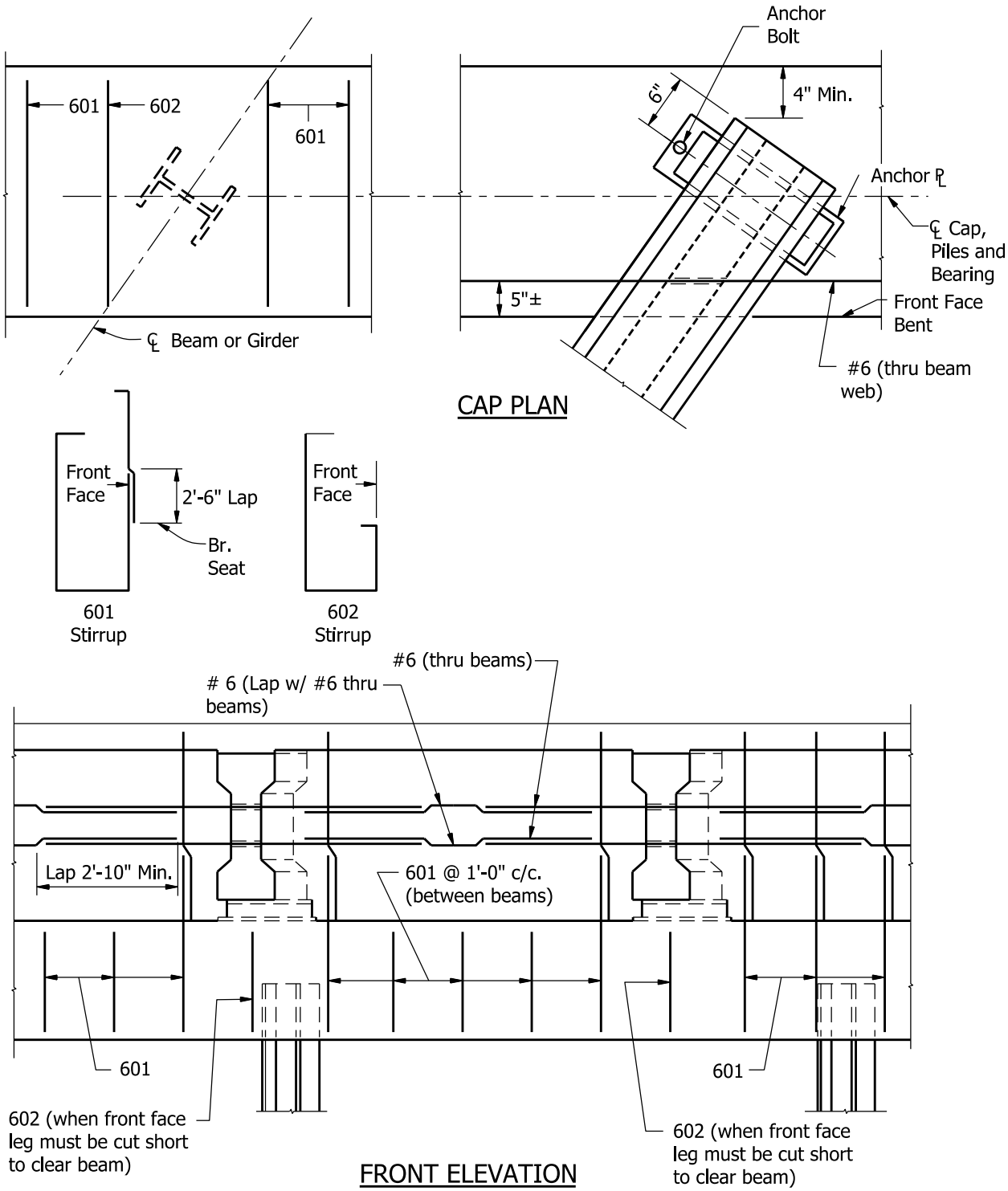

SUGGESTED INTEGRAL END BENT DETAILS
Method B, Beams Attached to Concrete Cap

Figure 409-2D
(Page 3 of 4)

Back

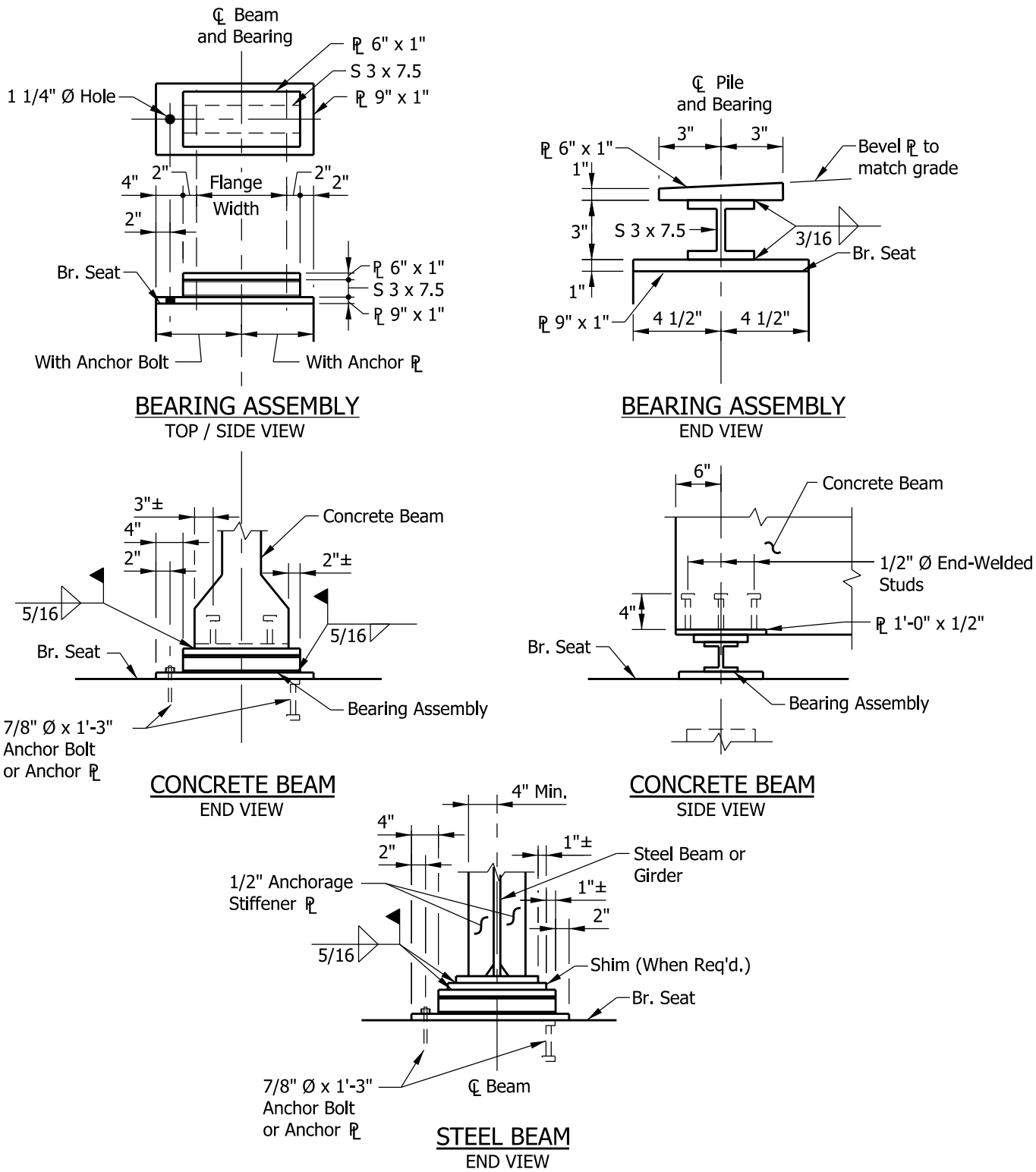

SUGGESTED INTEGRAL END BENT DETAILS
Method B, Beams Attached to Concrete Cap

Figure 409-2D
(Page 4 of 4)

Back

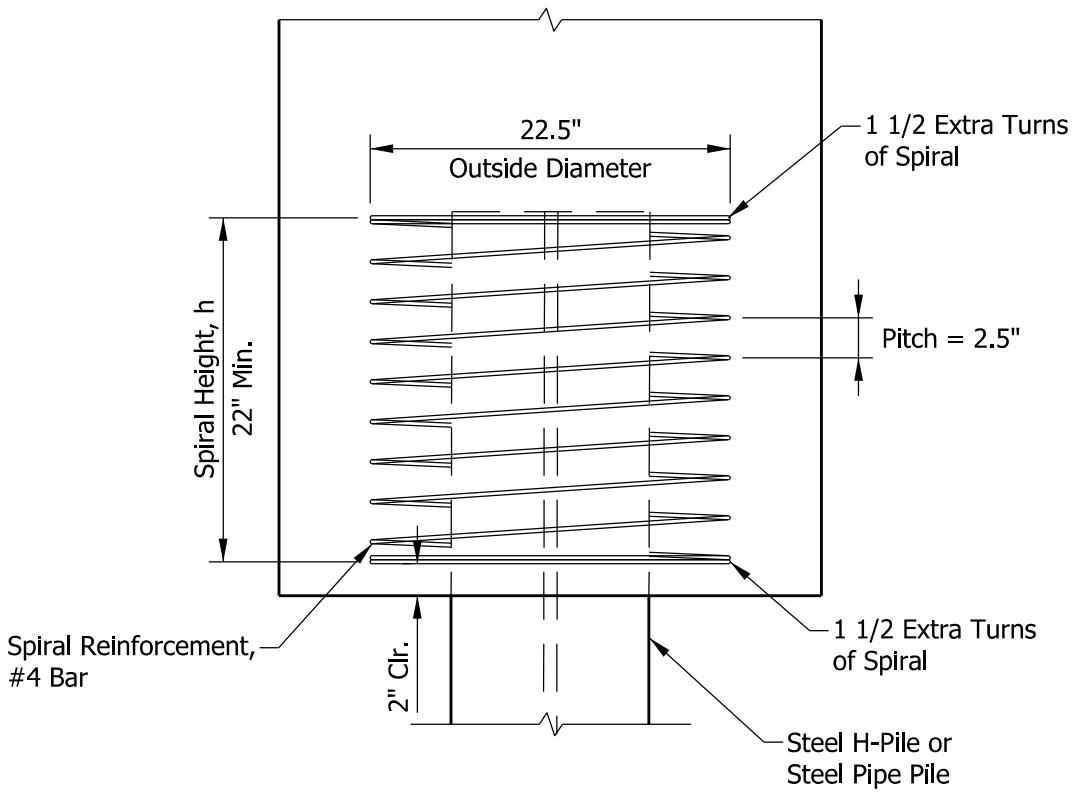

L = Total Length of Spiral Reinforcement (in.)

$$L = [(h/2.5" + 2(1\ 1/2\ \text{turns})]\ \pi\ 22.5"$$

SPIRAL REINFORCEMENT

Figure 409-2E

Back

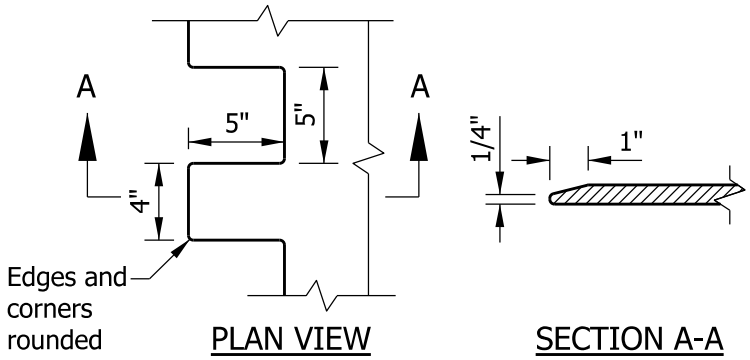

TOOTH DETAIL

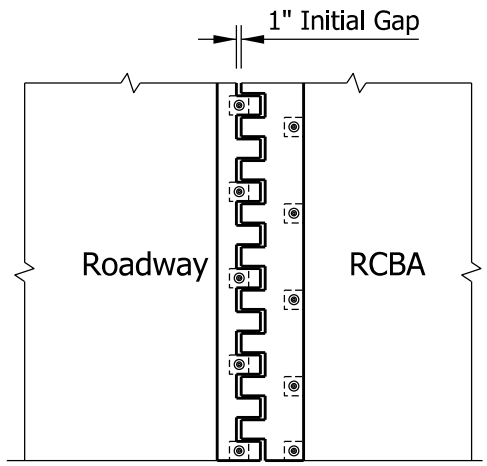

PLAN VIEW

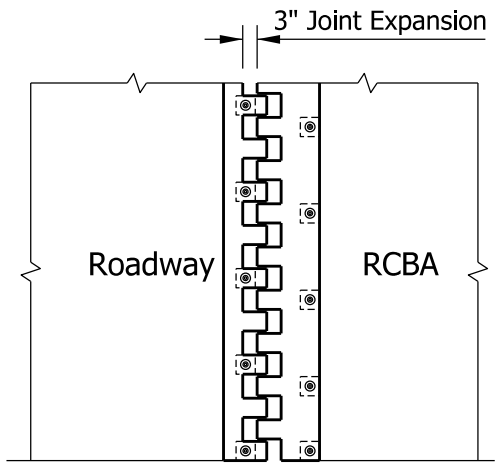

PLAN VIEW

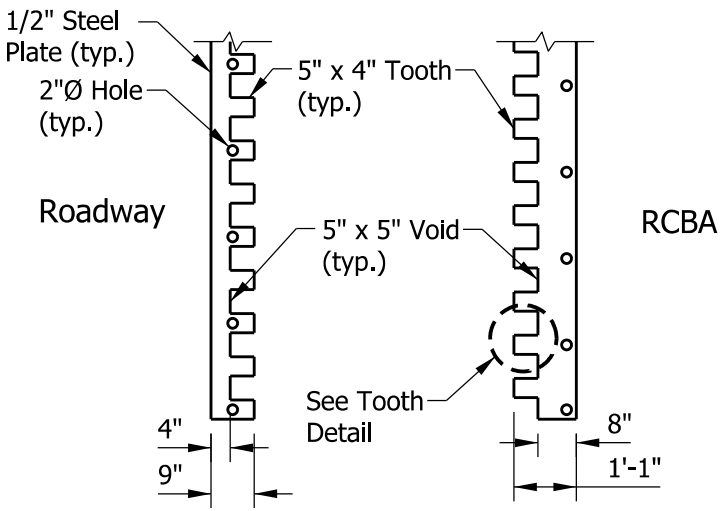

PRE-INSTALLATION TOOTH-JOINT COMPONENTS

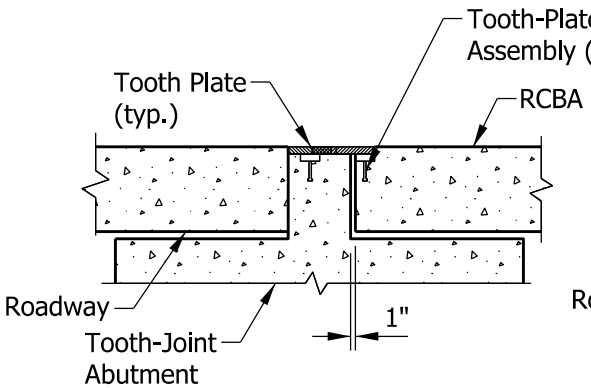

END VIEW

INSTALLED TOOTH JOINT, INITIAL, CLOSED

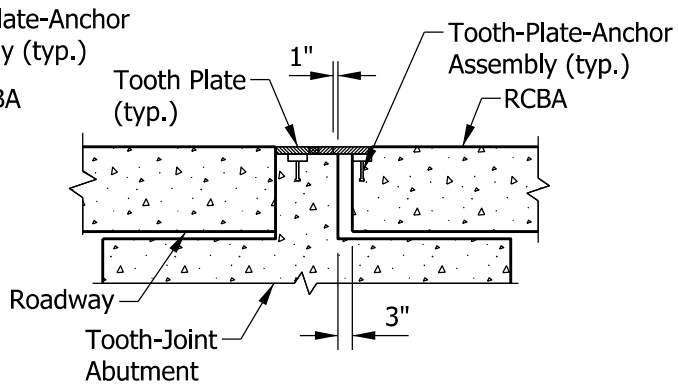

END VIEW

INSTALLED TOOTH JOINT, EXPANDED, OPEN

TOOTH JOINT
Figure 409-2F
(Page 1 of 4)

Back

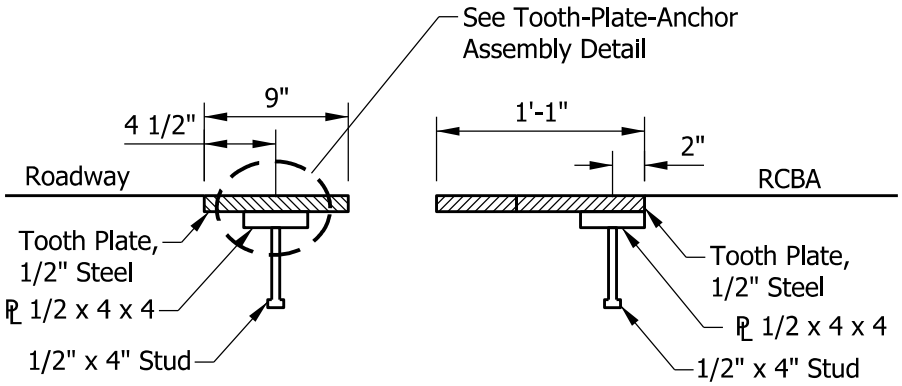

PLATE-STUD DETAIL

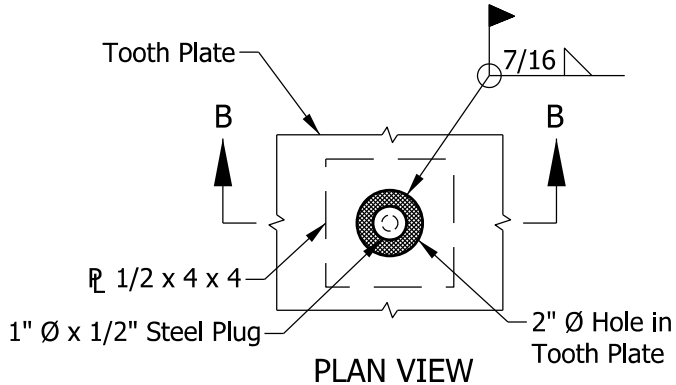

PLAN VIEW

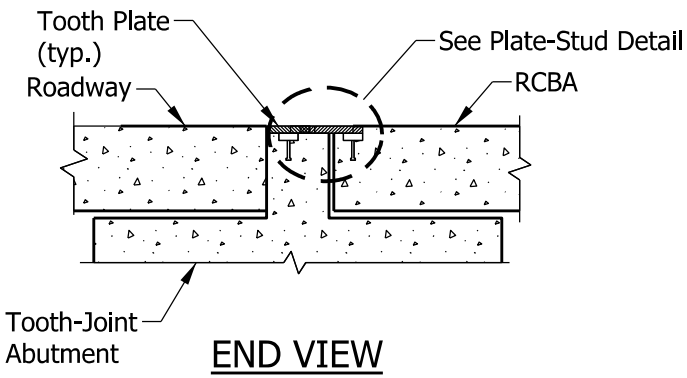

END VIEW

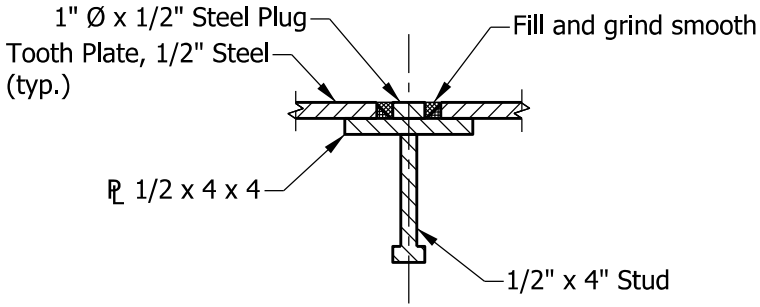

SECTION B-B

TOOTH-PLATE-ANCHOR ASSEMBLY

TOOTH JOINT
Figure 409-2F
(Page 2 of 4)

Back

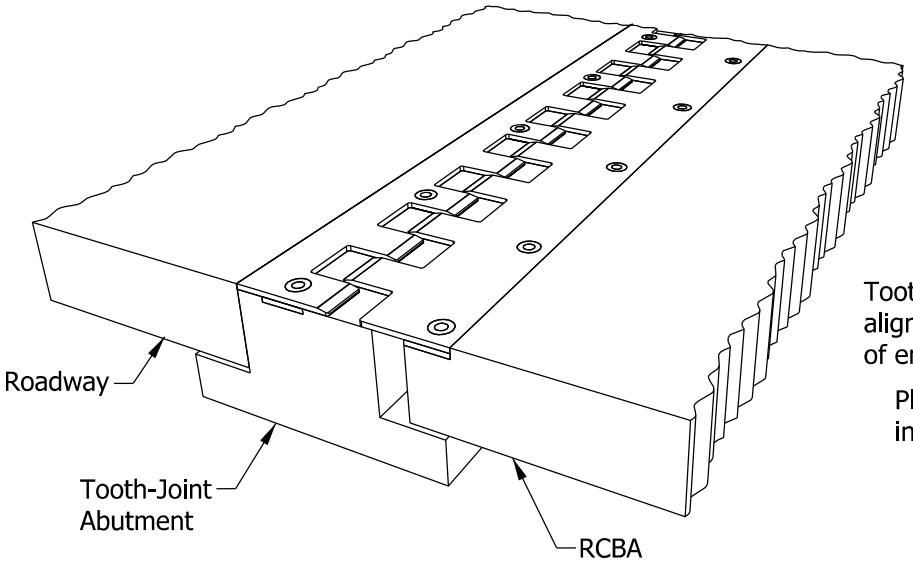

ASSEMBLED TOOTH JOINT
EXPANDED POSITION

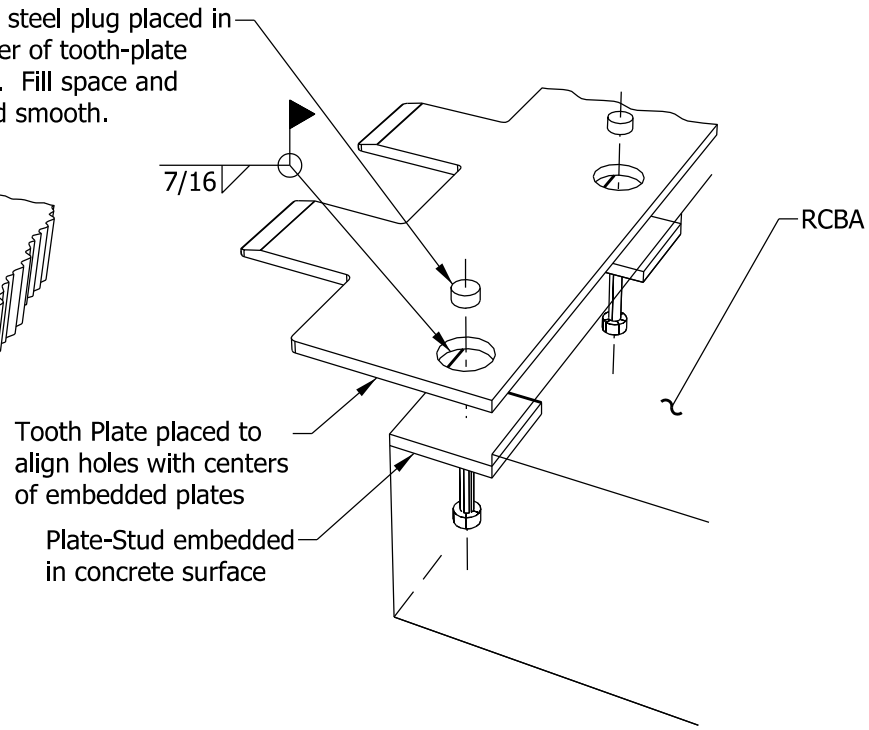

TOOTH-PLATE-ANCHOR ASSEMBLY
EXPLODED VIEW

TOOTH JOINT
Figure 409-2F
(Page 3 of 4)

Back

QUANTITIES FOR ONE RUNNING FOOT OF ABUTMENT	
Concrete, Class C	0.30 CFT
Reinforcing Bars	32.9 LBS

NOTE: All reinforcing bars shall be epoxy coated.

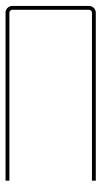

491 x 3'-9"

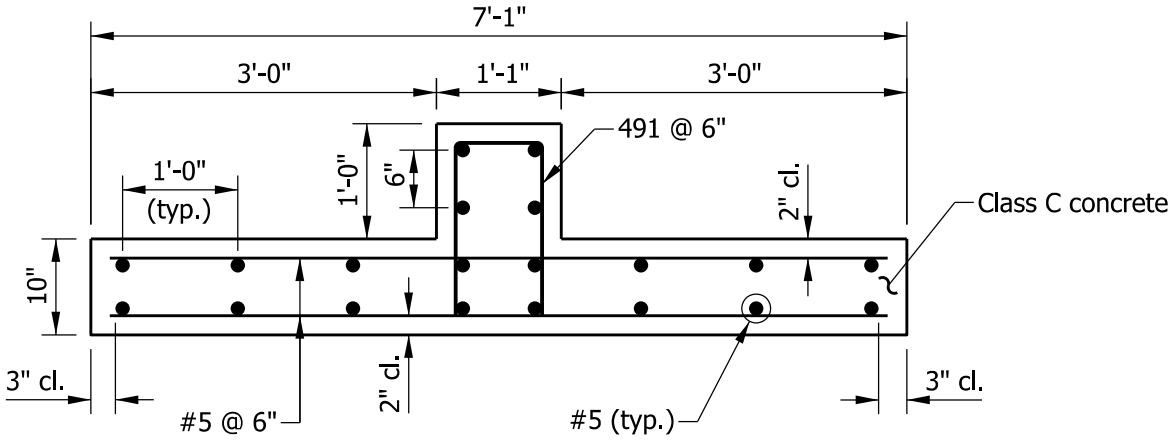

SECTION A-A

TOOTH-JOINT ABUTMENT
Figure 409-2F
(Page 4 of 4)

Back

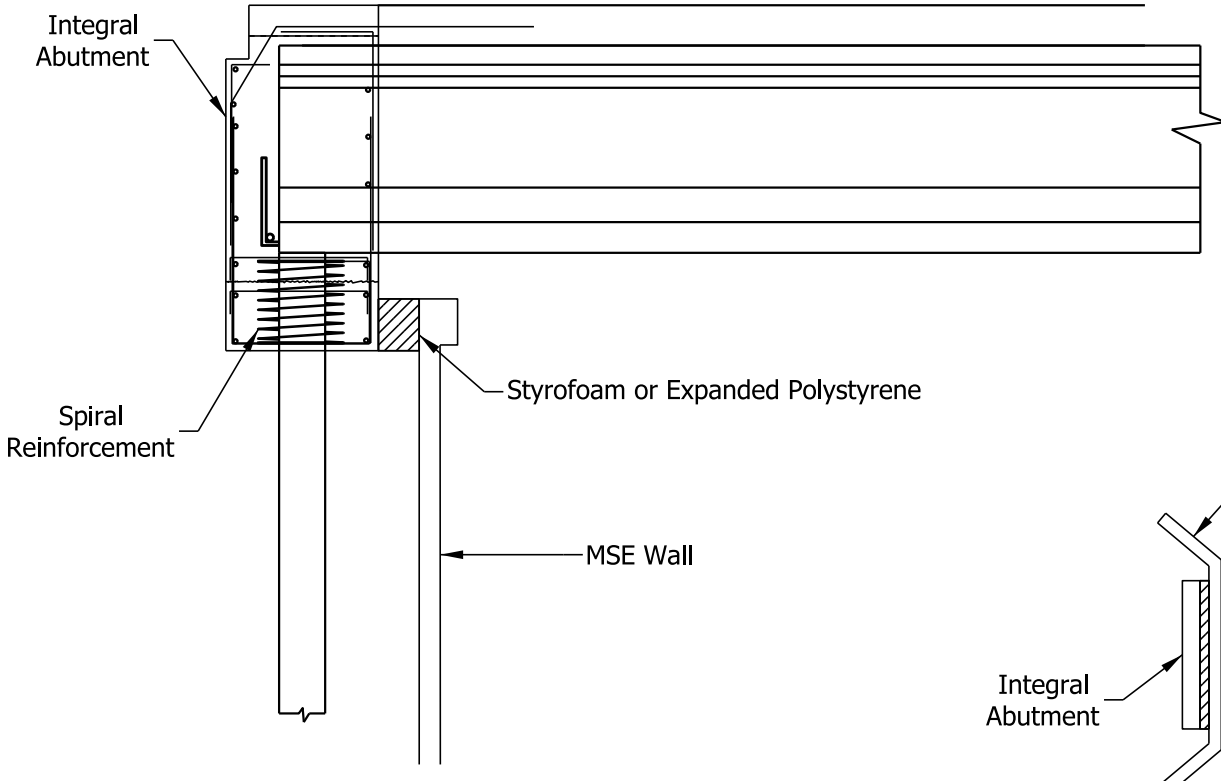

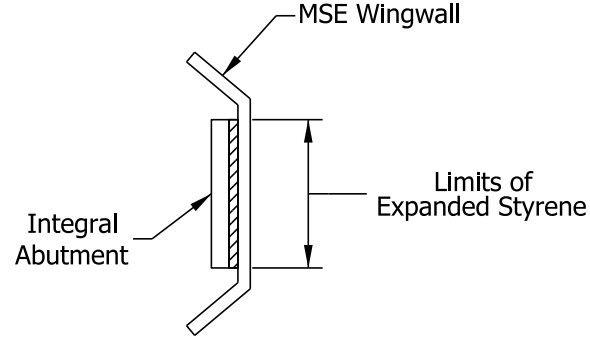

PLAN VIEW

NOTE:
Coarse aggregate and 6" end-bent drain pipe are not required for abutment on MSE wall.

INTEGRAL END BENT PLACED BEHIND MSE WALL

Figure 409-2G

Back

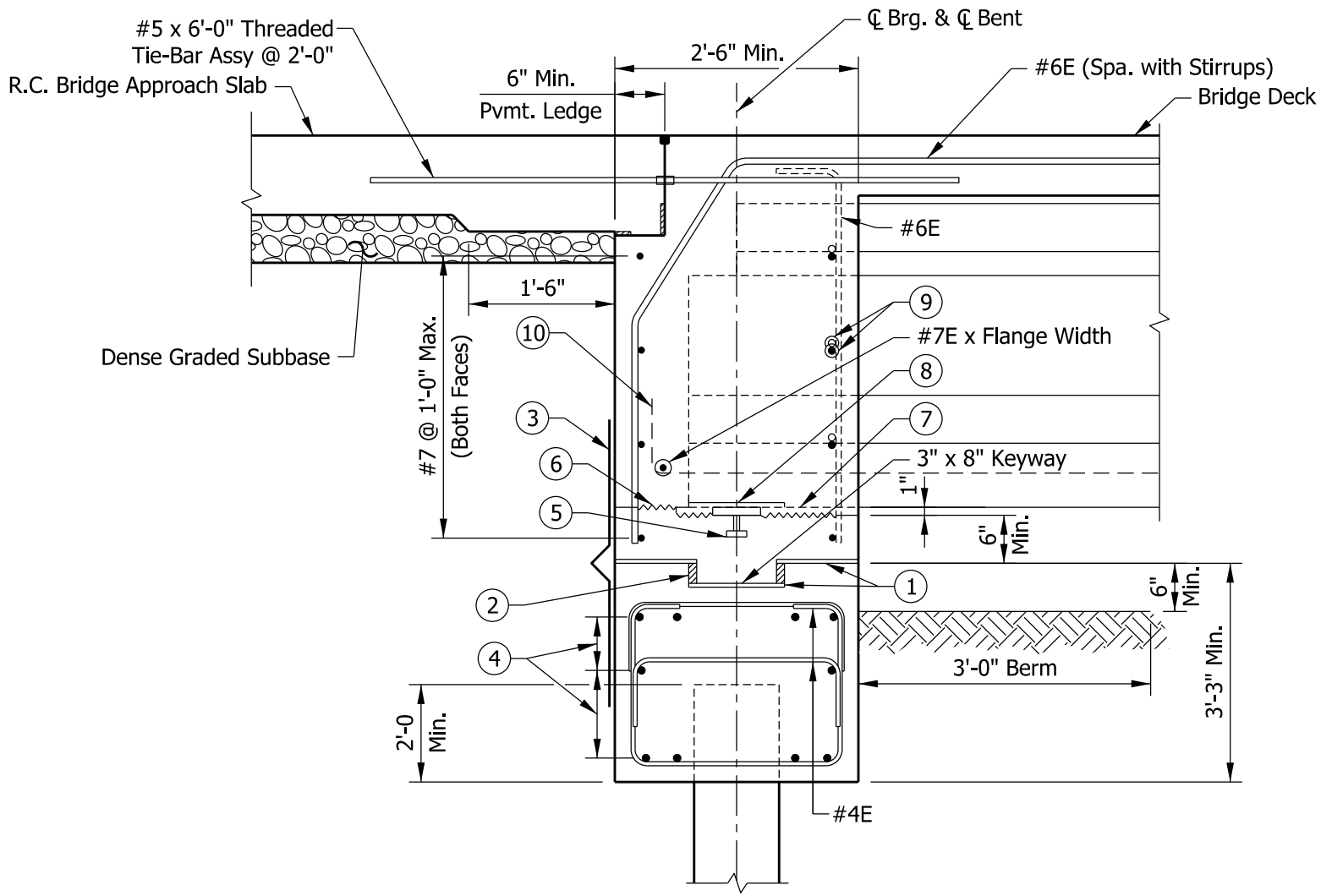

SECTION AT BEAM

SUGGESTED SEMI-INTEGRAL END BENT DETAILS
(Method 1)

Figure 409-3A
(Page 1 of 4)

Back

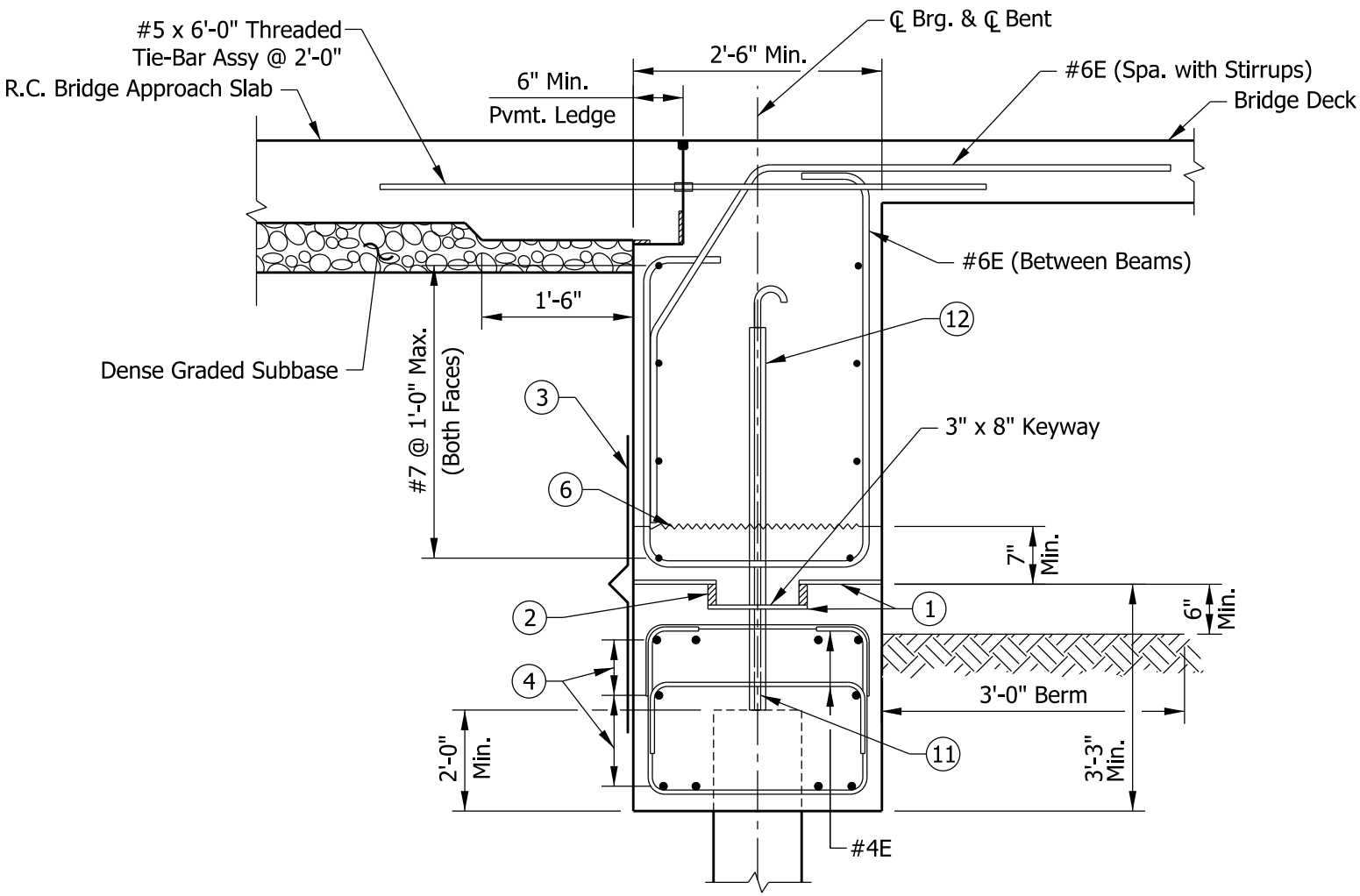

SECTION BETWEEN BEAMS

SUGGESTED SEMI-INTEGRAL END BENT DETAILS
(Method 1)

Figure 409-3A
(Page 2 of 4)

Back

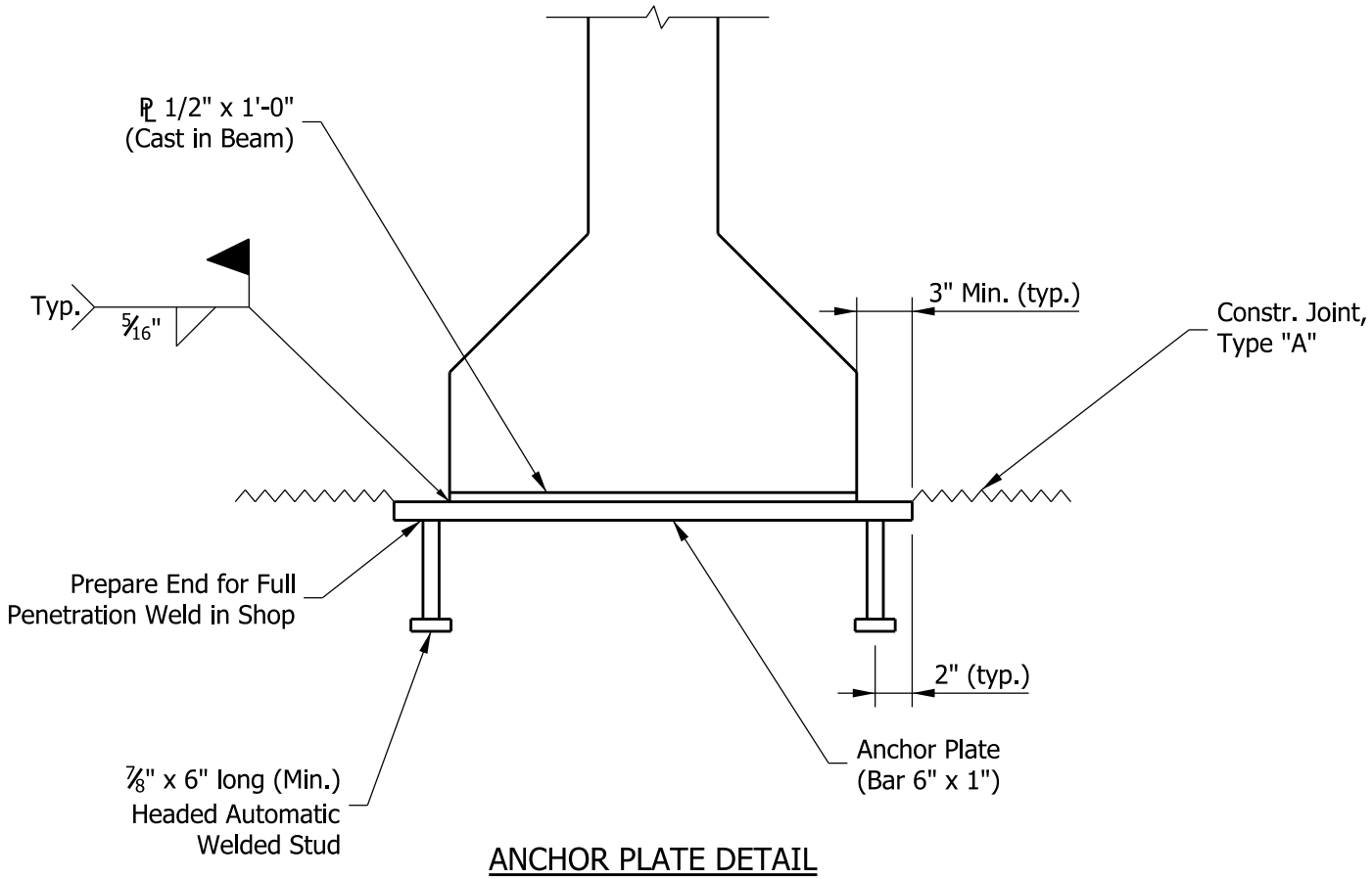

SUGGESTED SEMI-INTEGRAL END BENT DETAILS
(Method 1)

Figure 409-3A
(Page 3 of 4)

Back

NOTES:

1. 3 layers of medium weight roofing felt with grease between layers over 1/8" high-density plastic bearing strip with smooth side up.

2. Expanded polystyrene, size to be determined by designer.

3. Polychloroprene joint membrane attached to concrete. See Figure 409-3C.

4. Main cap reinforcing. Reinforce for dead and live loads. Stirrup size determined by designer, spaced at 1'-0" minimum.

5. Anchor plate. See Detail on Sheet 3 of 4.

6. Construction joint, type A.

7. 1" thickness expanded polystyrene, to be extended to 1/2" outside limits of beam, so that beam does not come in contact with construction-jointed concrete.

8. Plate 1/2" x 1'-0", full width of beam, cast in beam.

9. #6E x 6'-0" through 1" Ø holes cast in beams, lapped with #7E between beams.

10. Prestressed strand extension.

11. #6 reinforcing bar set in 1'-0" depth field-drilled hole filled with epoxy grout, min. pullout 26,500 lb.

12. a. PVC sleeve, size determined by designer. Top of sleeve to be sealed before concrete is poured.

    b. Used only if uplift is expected, or if bridge is in Seismic Category B.

SUGGESTED SEMI-INTEGRAL END BENT DETAILS (Method 1)

Figure 409-3A
(Page 4 of 4)

Back

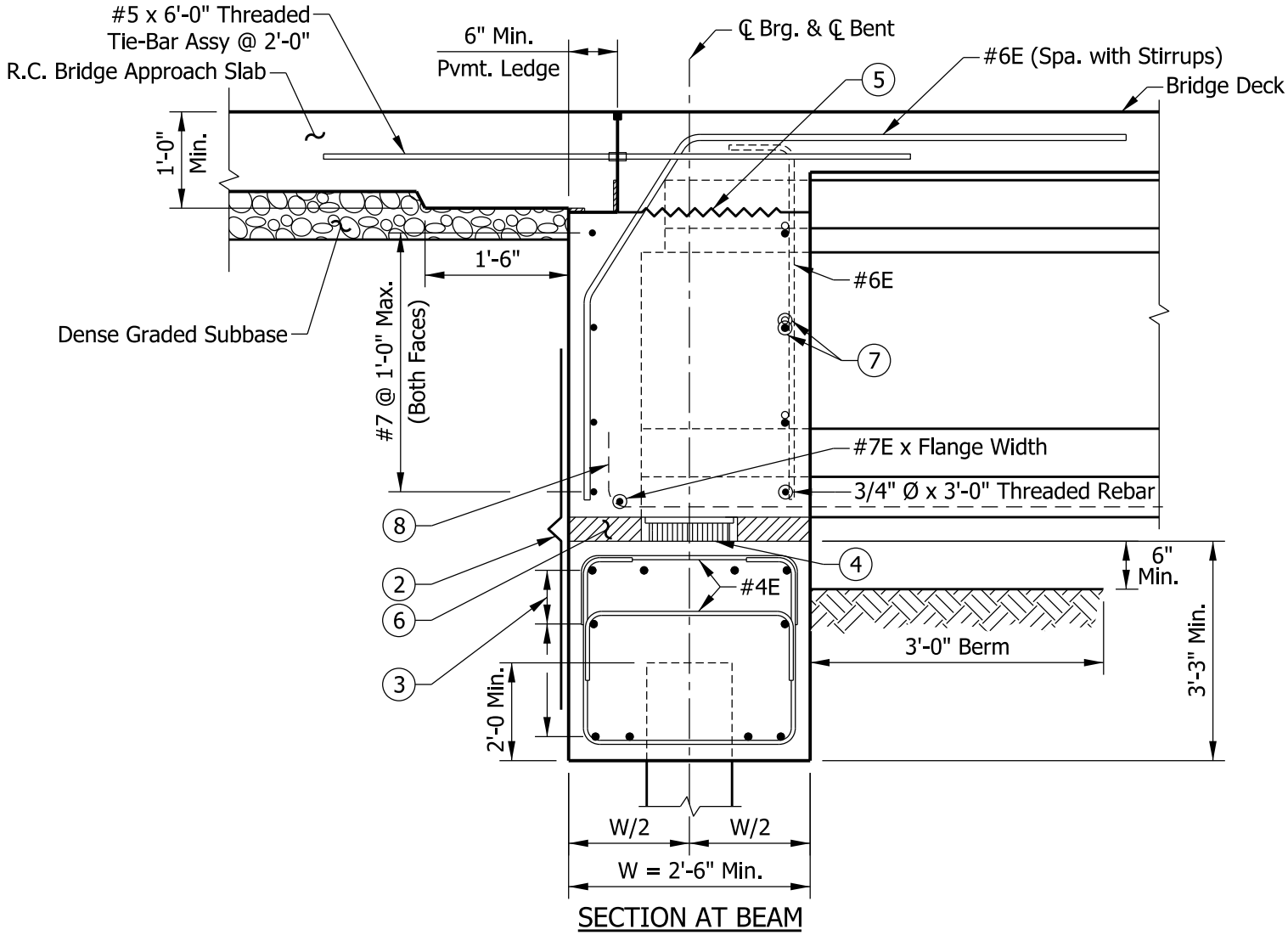

SUGGESTED SEMI-INTEGRAL END BENT DETAILS
(Method 2)

Figure 409-3B
(Page 1 of 3)

Back

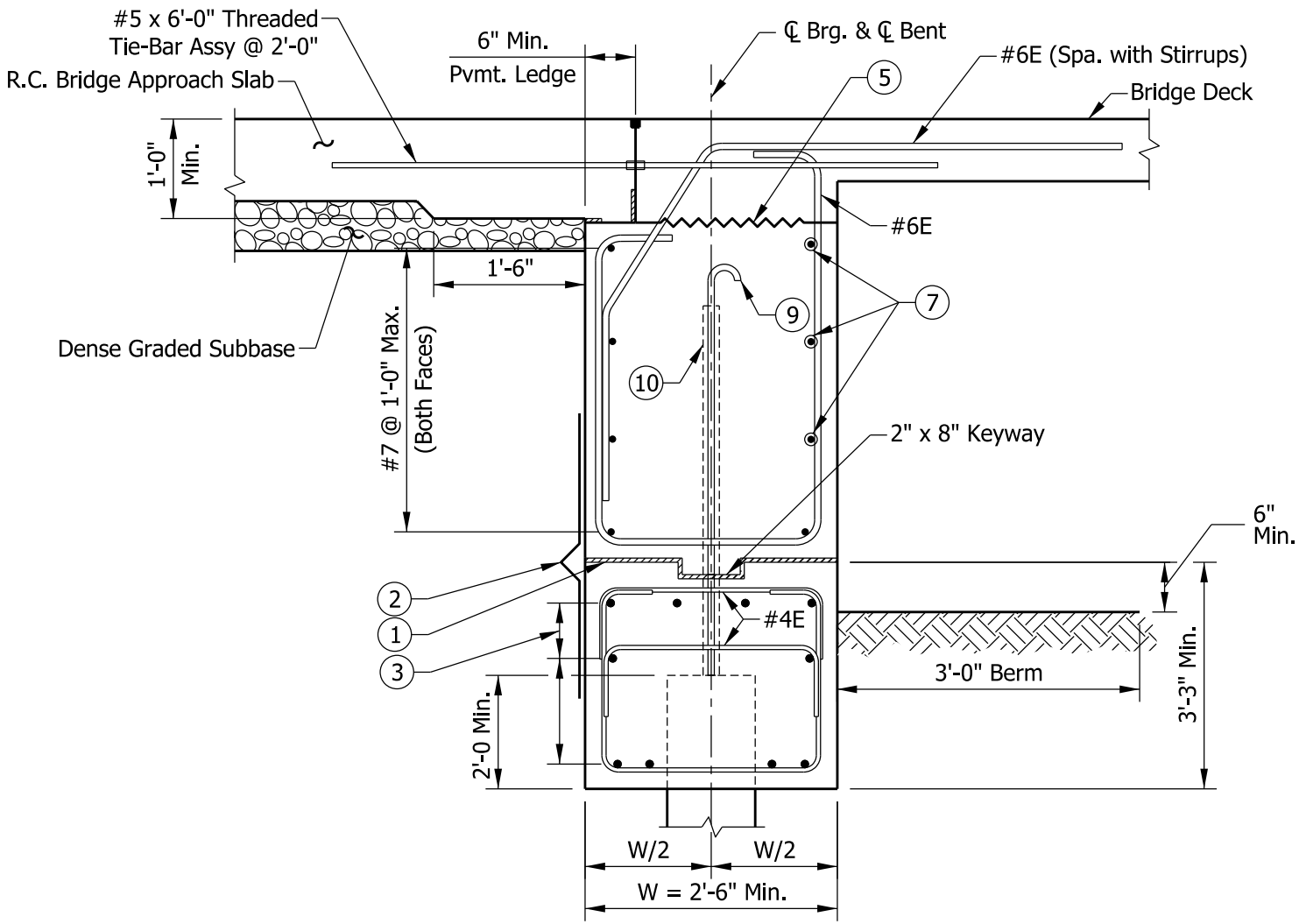

SECTION BETWEEN BEAMS

SUGGESTED SEMI-INTEGRAL END BENT DETAILS
(Method 2)

Figure 409-3B
(Page 2 of 3)

Back

NOTES:

1. 1/2" expanded polystyrene (horizontal face), 1" expanded polystyrene (vertical face).
2. Polychloroprene joint membrane attached to concrete. See Figure 409-3C.
3. Main cap reinforcing. Reinforce for dead and live loads. Stirrup size determined by designer, spaced at 1'-0" minimum.
4. Elastomeric bearing pad.
5. Optional construction joint, type A.
6. Expanded polystyrene cut to clear bearing pad by 1/2".
7. #6E x 6'-0" through 1" Ø holes cast in beams, lapped with #7E between beams.
8. Prestressed strand extension.
9. #6 reinforcing bar set in 1'-0" depth field-drilled hole filled with epoxy grout, min. pullout 26,500 lb.
10. a. PVC sleeve, size determined by designer.
    Top of sleeve to be sealed before concrete is poured.

    b. Used only if uplift is expected, or if bridge is in Seismic Category B.

SUGGESTED SEMI-INTEGRAL END BENT DETAILS
(Method 2)

Figure 409-3B
(Page 3 of 3)

Back

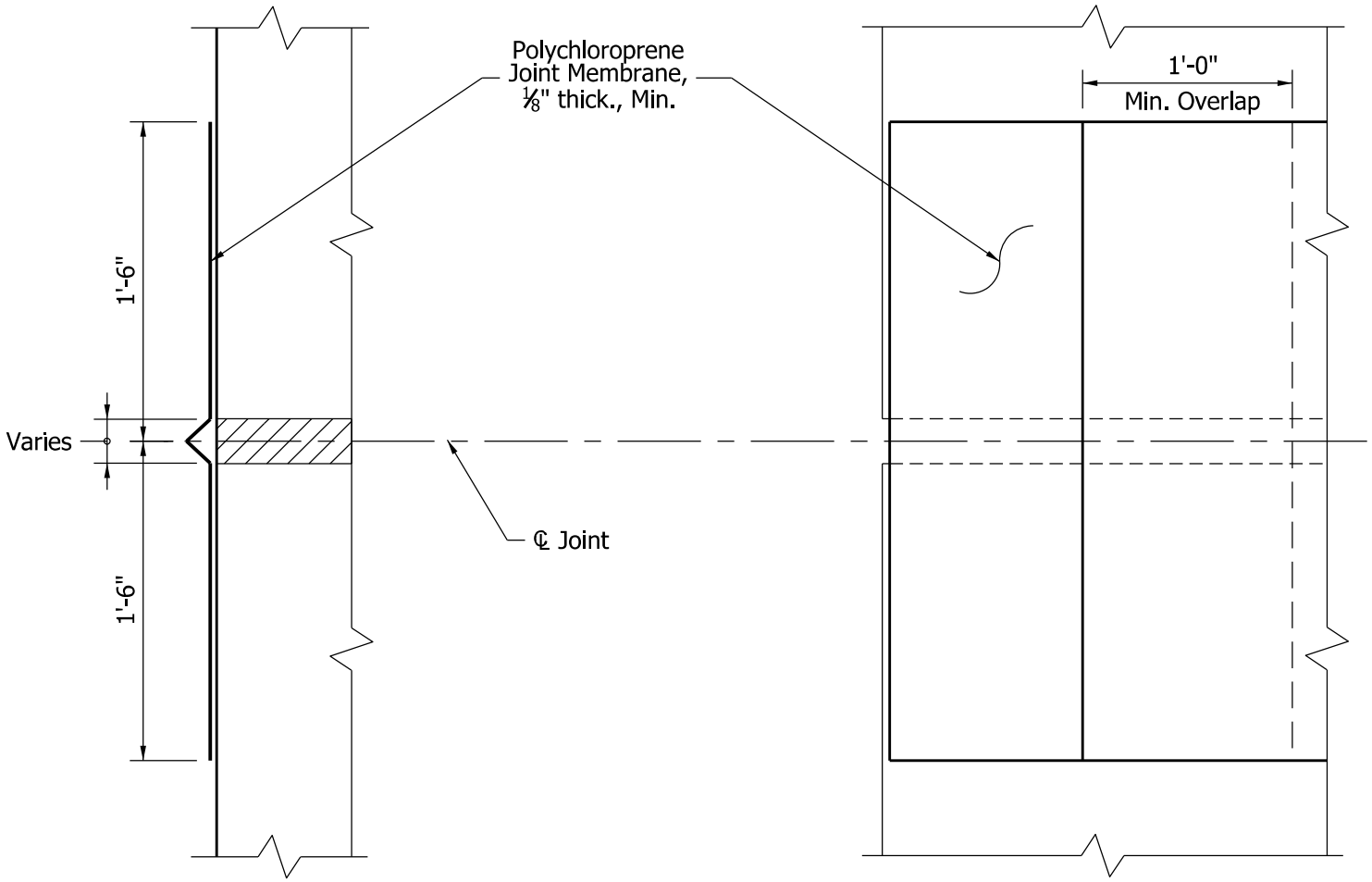

JOINT MEMBRANE DETAIL

Figure 409-3C

Back

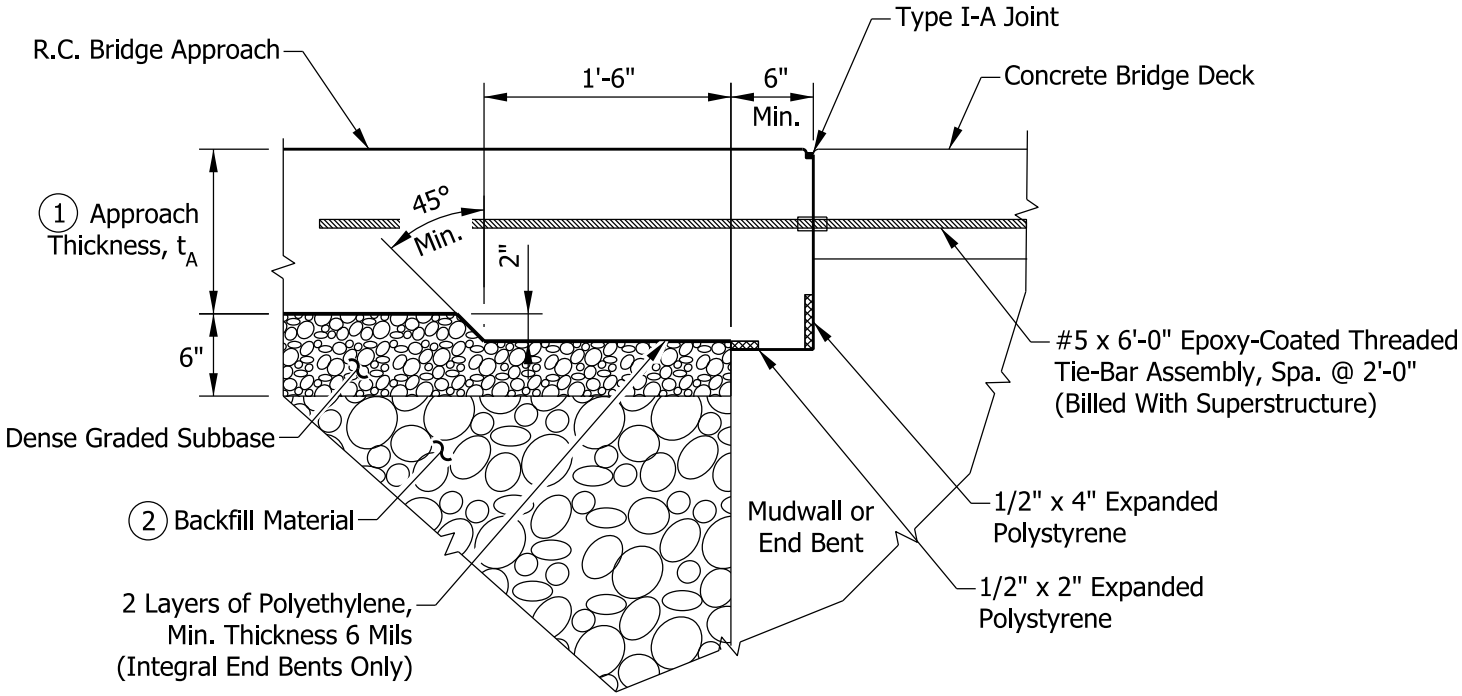

NOTES:

1. 10" if design year AADT < 1000. Otherwise, 1'-0" or the thickness of the concrete pavement, whichever is thicker.

2. Structure Backfill, Type 4 if slab bridge or Coarse Aggregate #8 or #9 for all other bridges with end bents.

PAVEMENT LEDGE DETAIL
FOR INTEGRAL AND SEMI-INTEGRAL END BENT
(Deck without Expansion Joint)

Figure 409-3D

Back

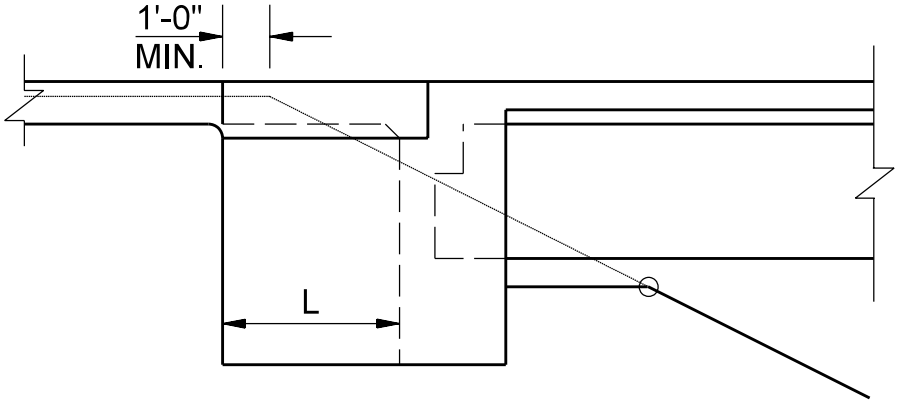

DECK WITHOUT EXP. JOINT
INTEGRAL END BENT

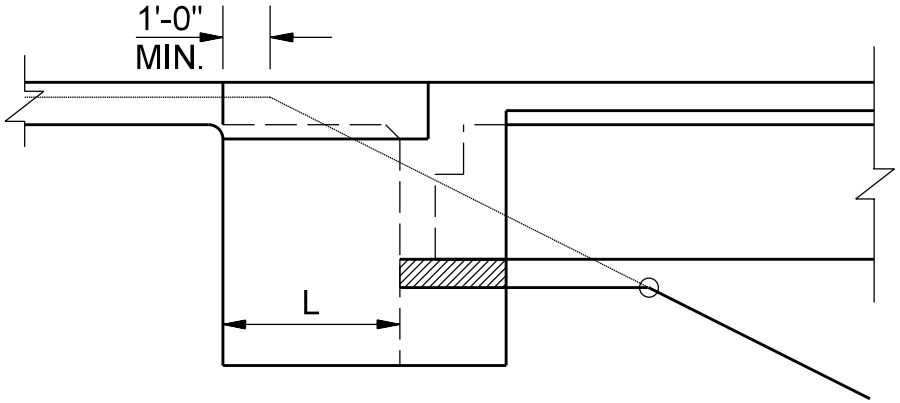

DECK WITHOUT EXP. JOINT
SEMI-INTEGRAL END BENT

TYPICAL WINGWALL DETAILS

Figure 409-5A

Back

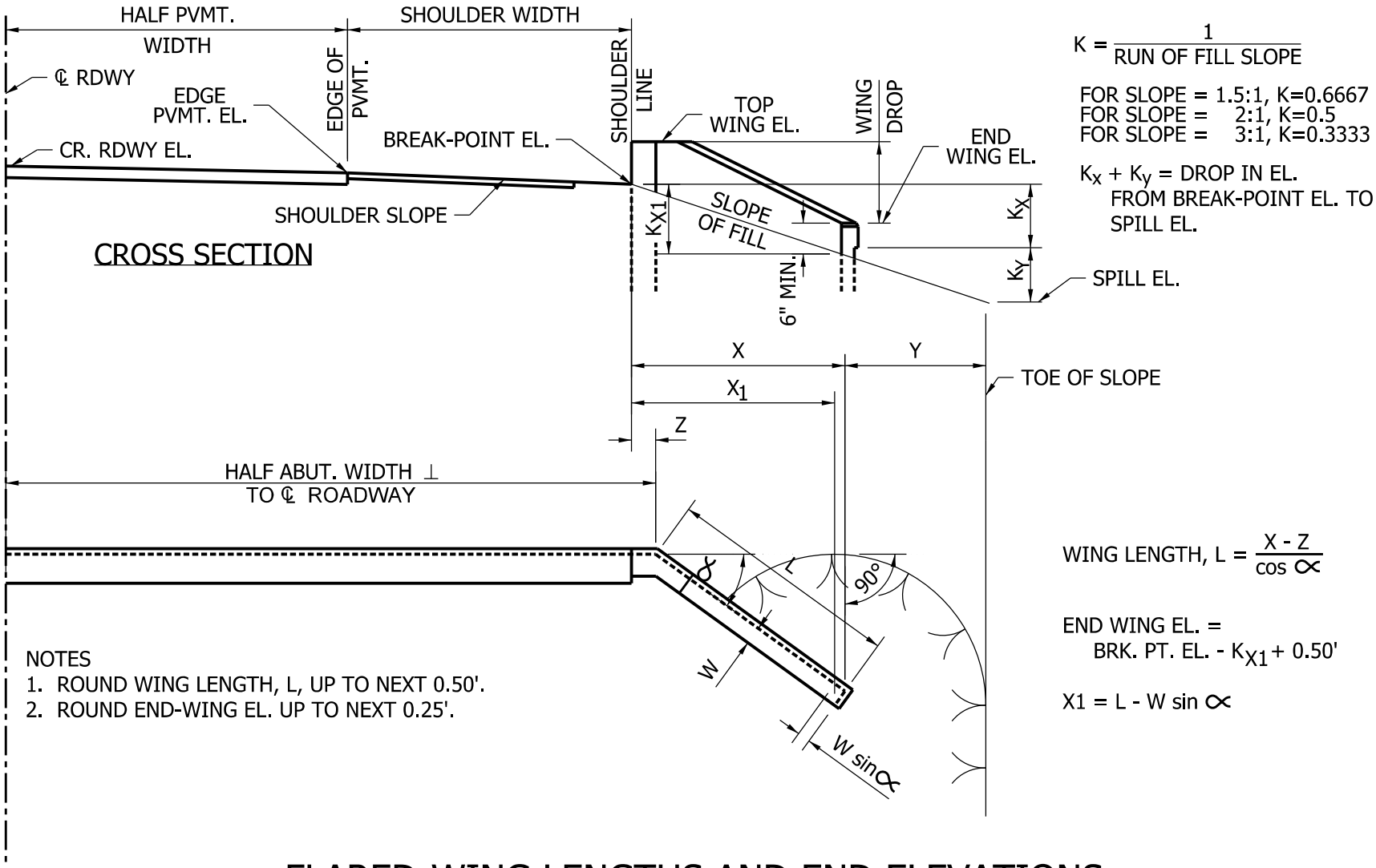

FLARED-WING LENGTHS AND END ELEVATIONS, SQUARE STRUCTURE

Figure 409-5B

Back

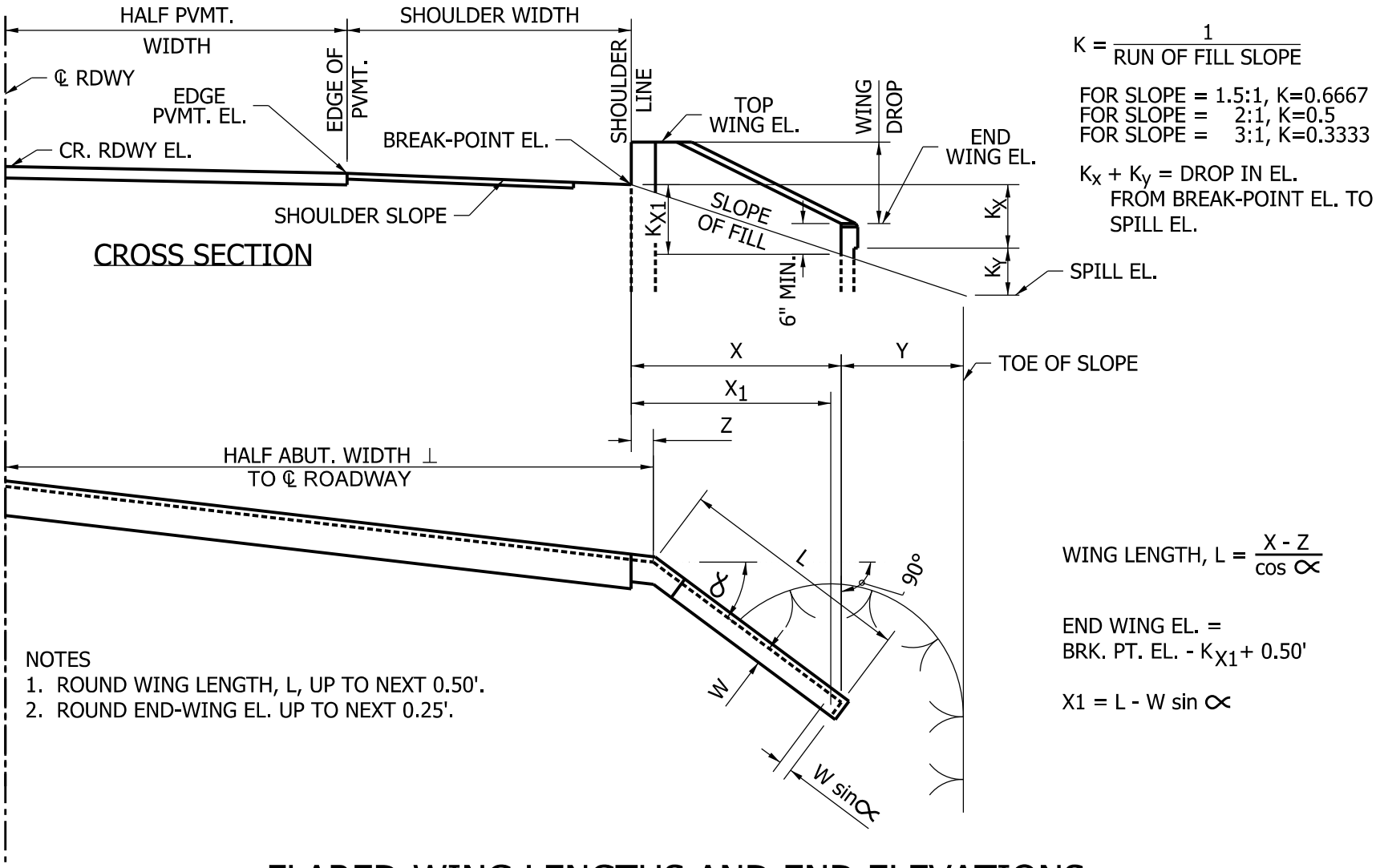

$$K = \frac{1}{\text{RUN OF FILL SLOPE}}$$

FOR SLOPE = 1.5:1, K=0.6667
FOR SLOPE = 2:1, K=0.5
FOR SLOPE = 3:1, K=0.3333

$K_X + K_Y$ = DROP IN EL. FROM BREAK-POINT EL. TO SPILL EL.

$$\text{WING LENGTH, } L = \frac{X - Z}{\cos \propto}$$

END WING EL. = BRK. PT. EL. - K_{X1} + 0.50'

$X1 = L - W \sin \propto$

FLARED-WING LENGTHS AND END ELEVATIONS, STRUCTURE SKEWED TO RIGHT

Figure 409-5C

Back

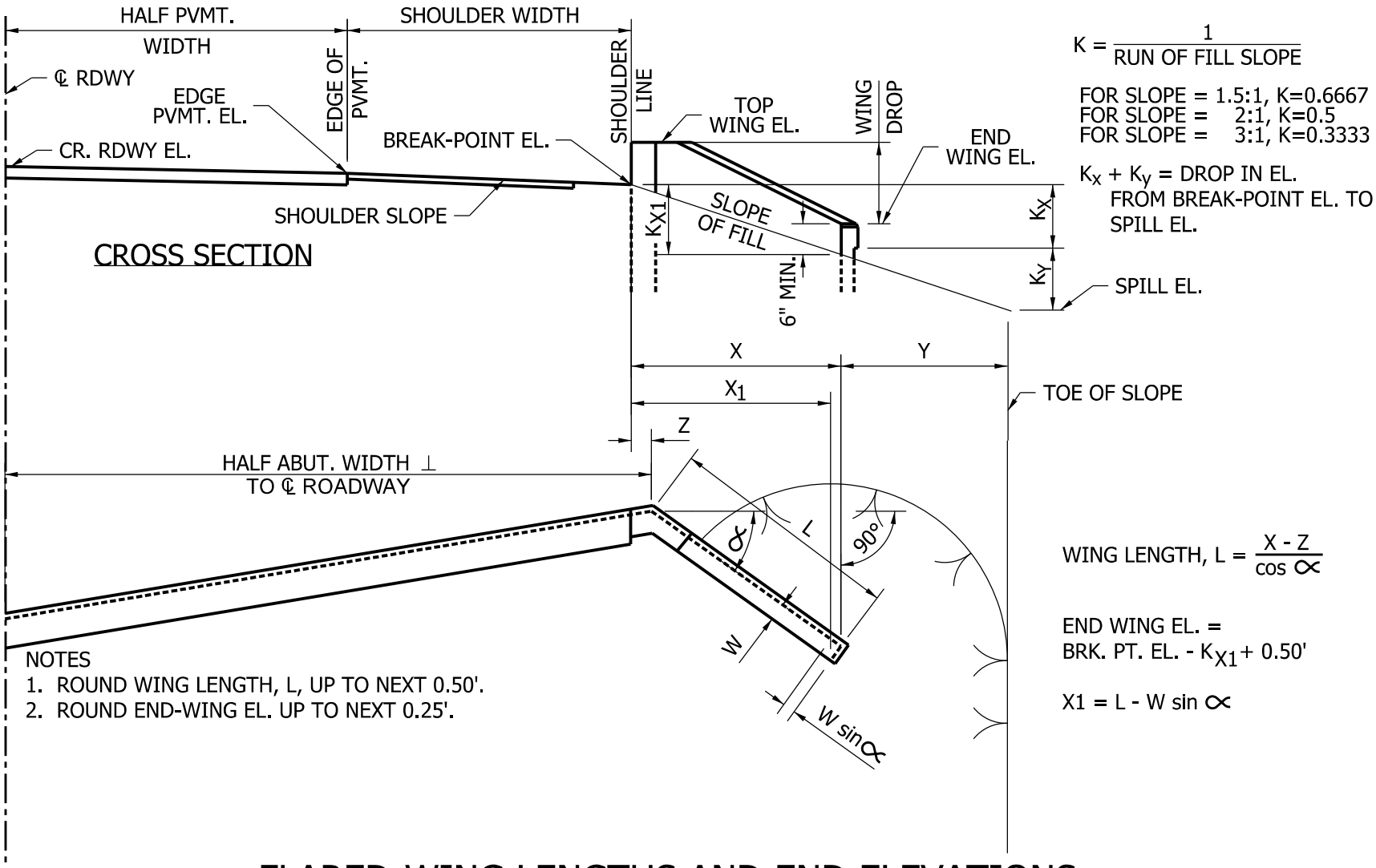

NOTES
1. ROUND WING LENGTH, L, UP TO NEXT 0.50'.
2. ROUND END-WING EL. UP TO NEXT 0.25'.

FLARED-WING LENGTHS AND END ELEVATIONS, STRUCTURE SKEWED TO LEFT

Figure 409-5D

Back

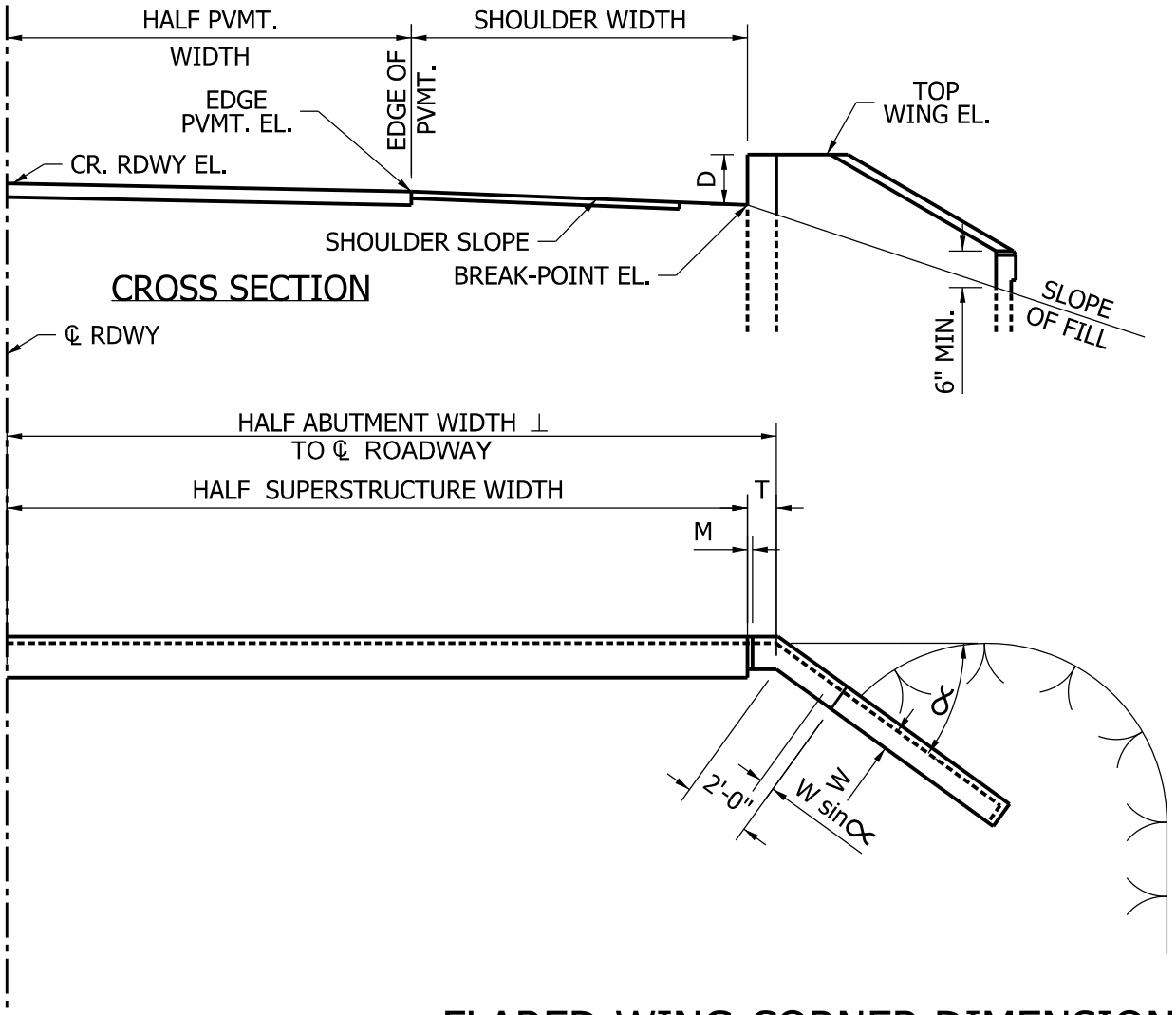

D = TOP WING EL. - BREAK-POINT EL.

∝ = ANGLE BETWEEN WING AND LINE ⊥ TO ℄ RDWY.

Δ = SKEW ANGLE

$L1 = \frac{T}{\cos \Delta}$

T & M - TO BE AS DETERMINED BY DESIGNER.

FLARED-WING-CORNER DIMENSIONS, SQUARE STRUCTURE

Figure 409-5E

Back

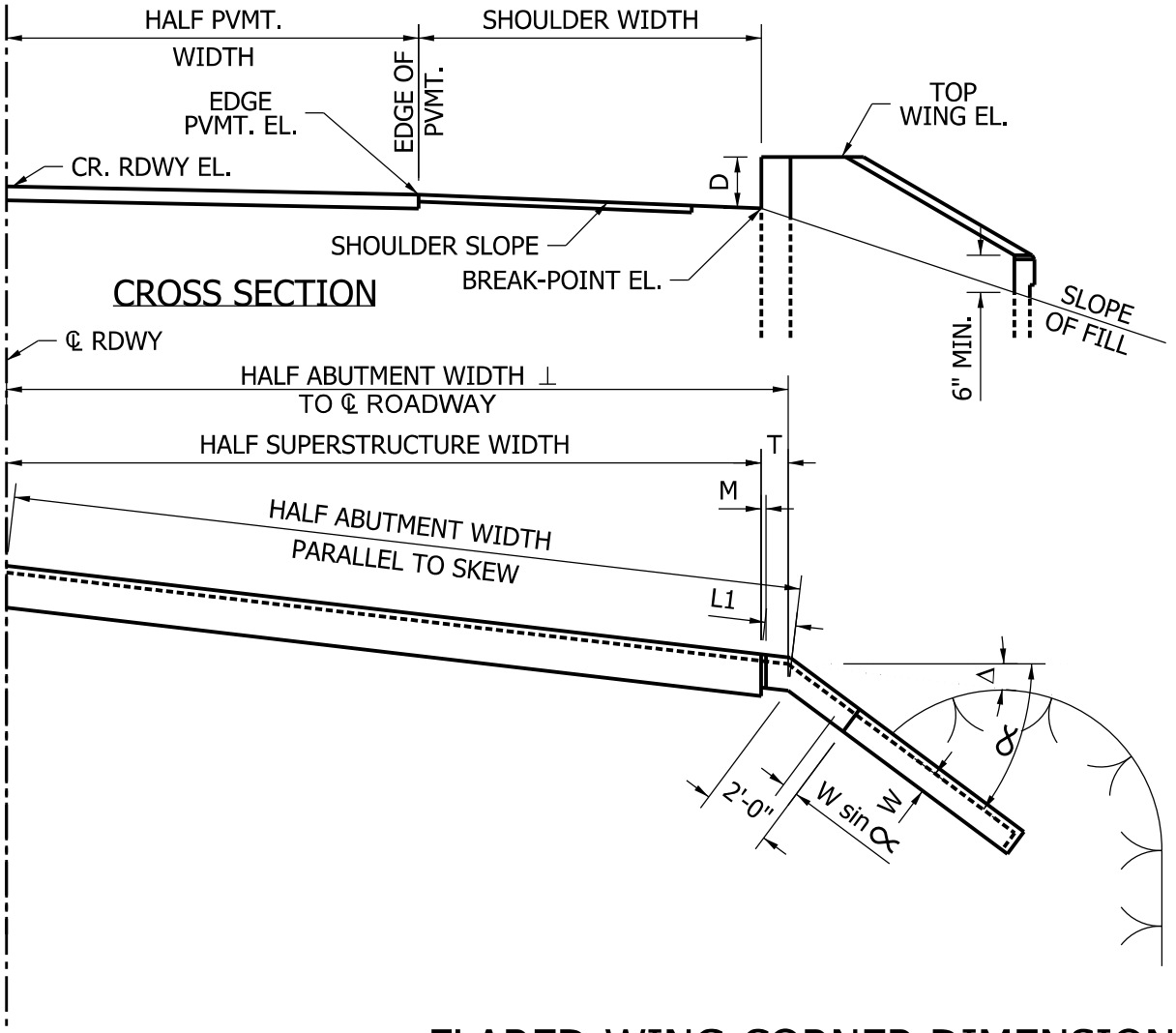

D = TOP WING EL. - BREAK-POINT EL.

∝ = ANGLE BETWEEN WING AND LINE ⊥ TO ℄ RDWY.

Δ = SKEW ANGLE

$L1 = \frac{T}{\cos \Delta}$

T & M - TO BE AS DETERMINED BY DESIGNER.

FLARED-WING-CORNER DIMENSIONS, STRUCTURE SKEWED TO RIGHT

Figure 409-5F

Back

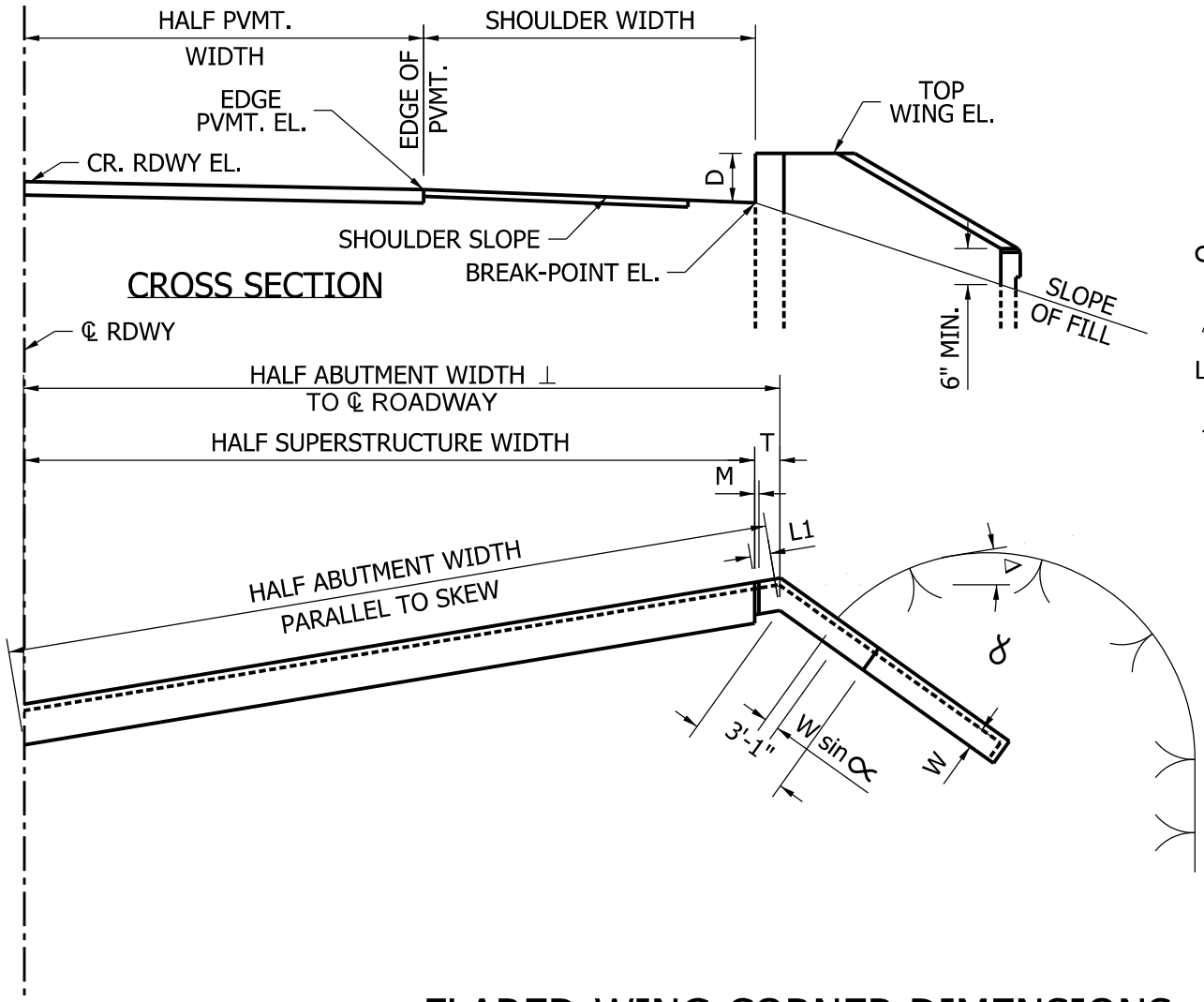

D = TOP WING EL. - BREAK-POINT EL.

α = ANGLE BETWEEN WING AND LINE ⊥ TO ℄ RDWY.

Δ = SKEW ANGLE

$L1 = \frac{T}{\cos \Delta}$

T & M - TO BE AS DETERMINED BY DESIGNER.

FLARED-WING-CORNER DIMENSIONS, STRUCTURE SKEWED TO LEFT

Figure 409-5G

Back

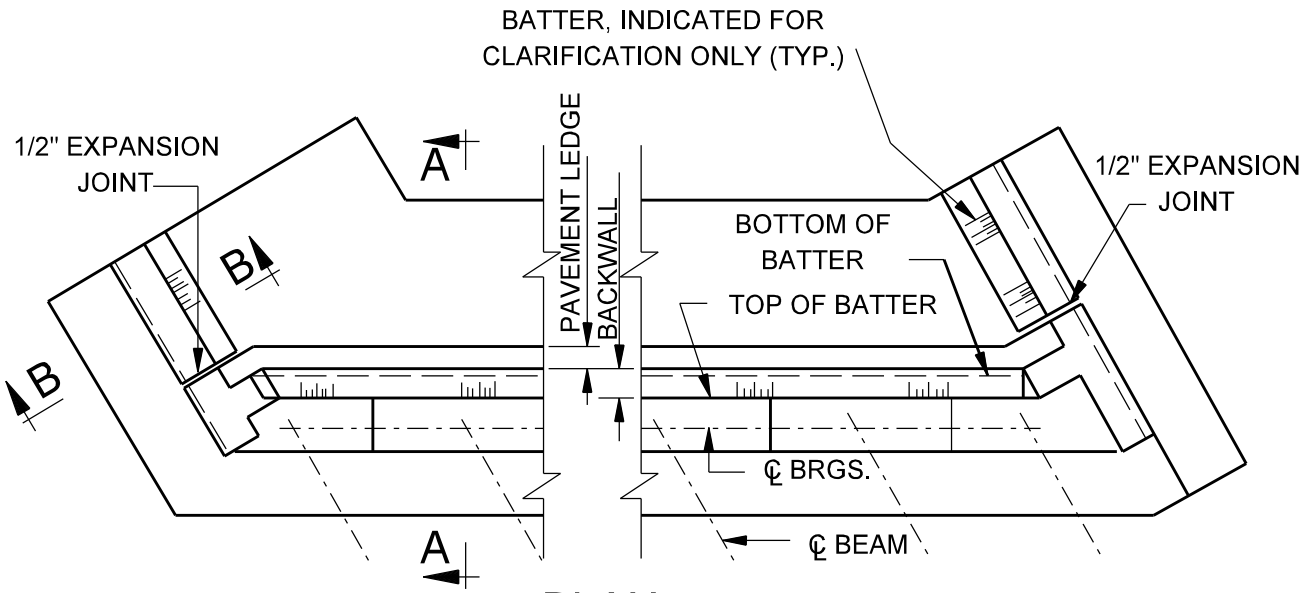

PLAN

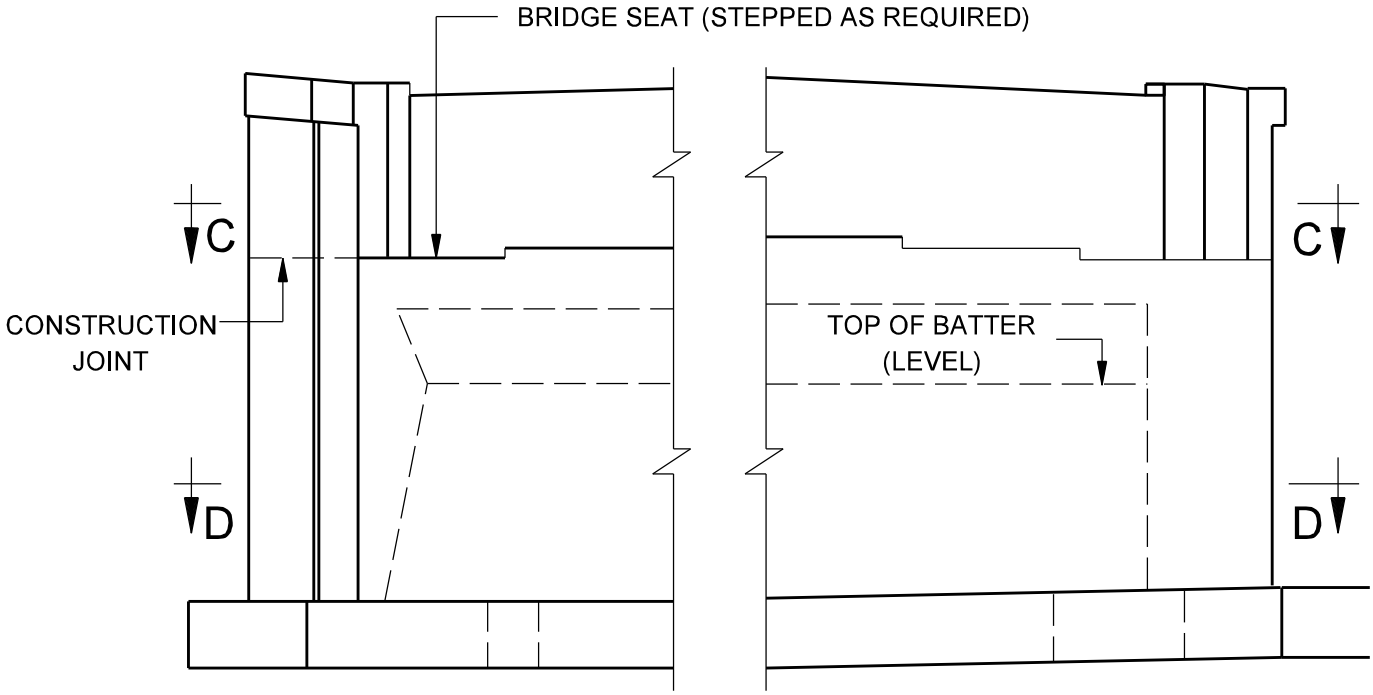

ELEVATION

TYPICAL ABUTMENT DETAILS

Figure 409-5H
(Page 1 of 2)

Back

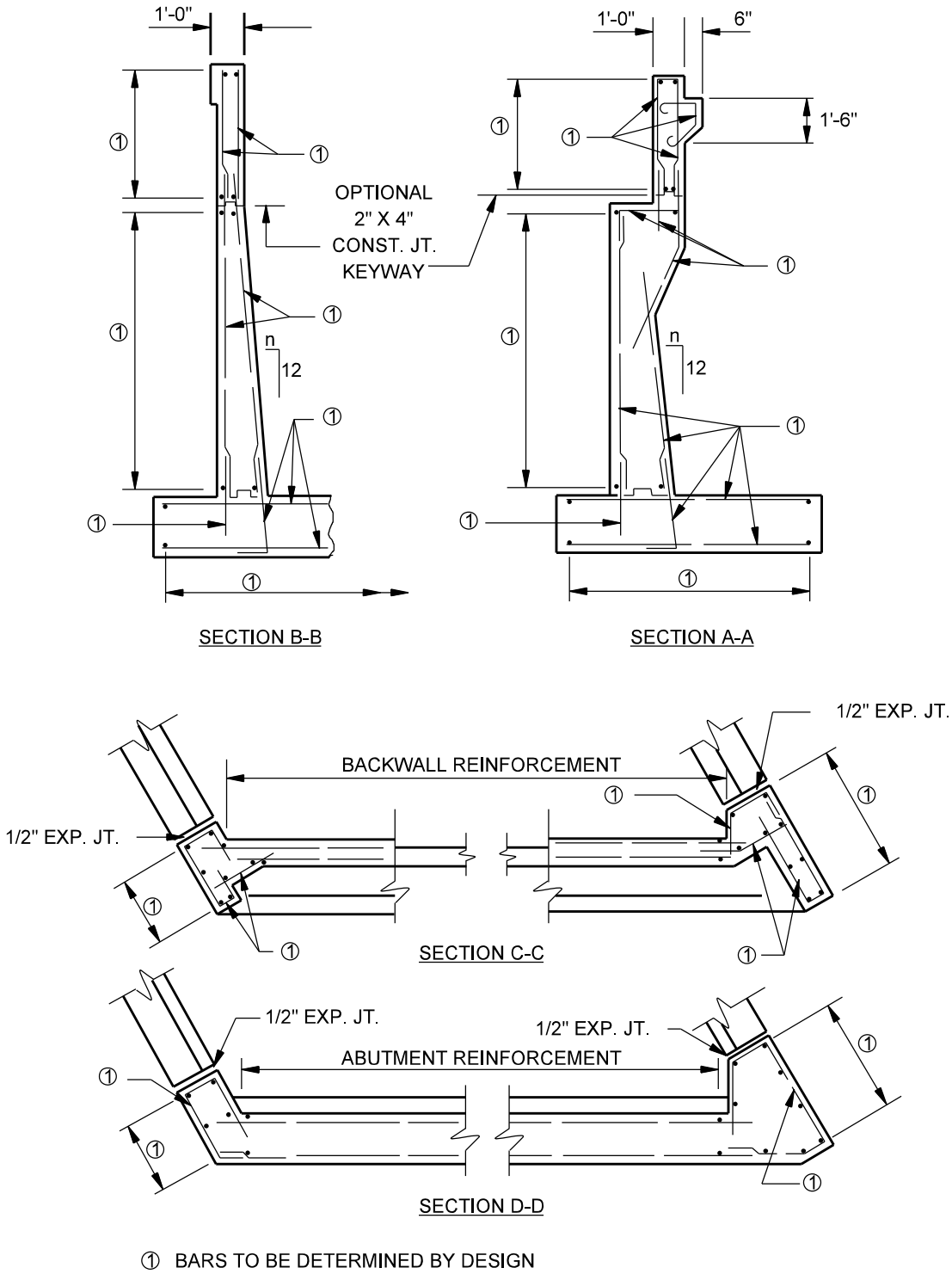

① BARS TO BE DETERMINED BY DESIGN

TYPICAL ABUTMENT DETAILS

Figure 409-5H
(Page 2 of 2)

Back

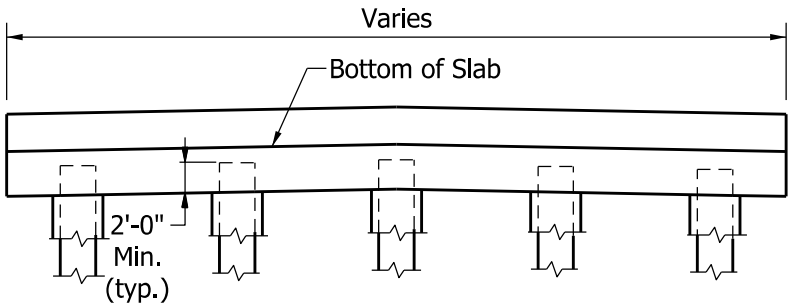

ELEVATION

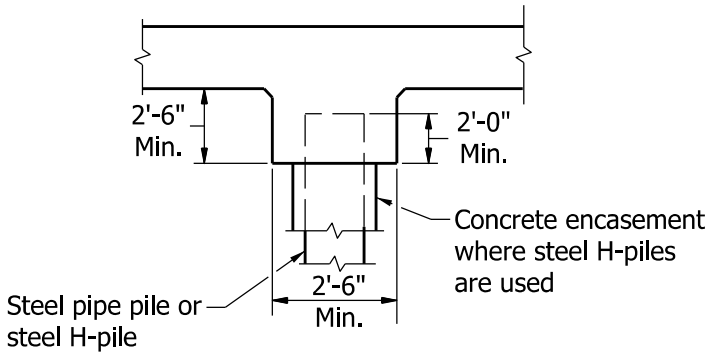

SECTION

INTEGRAL

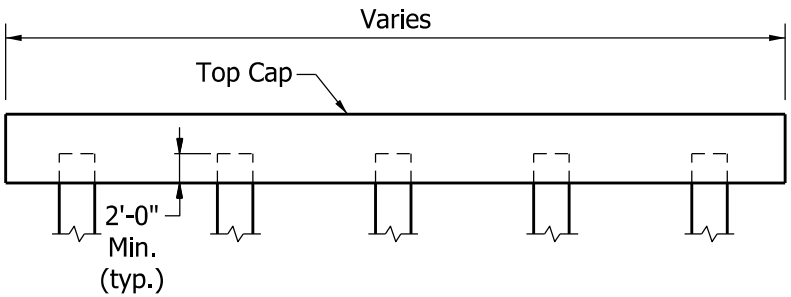

ELEVATION

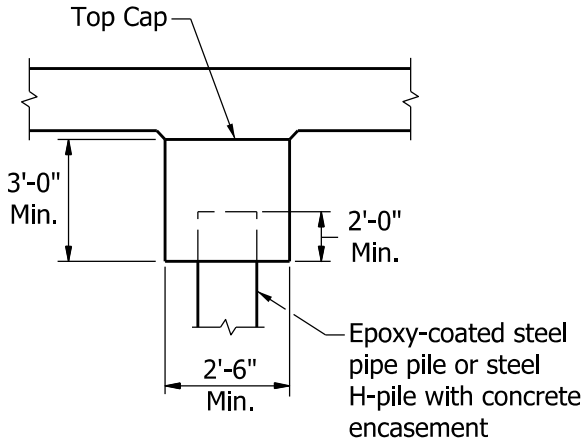

SECTION

NON-INTEGRAL

EXTENDED PILE BENT

Figure 409-6A

Back

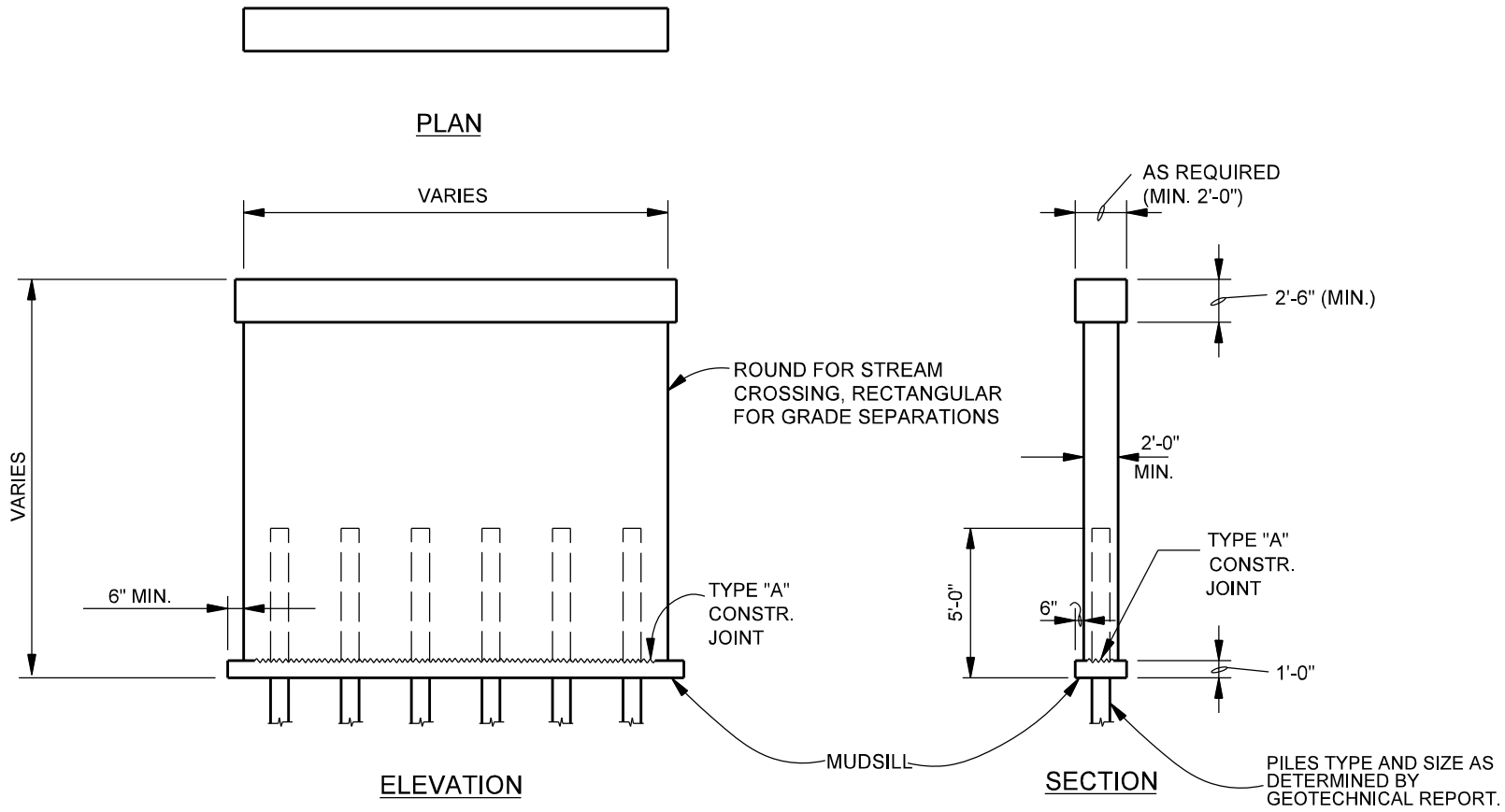

Note: Elevation of bottom of mudsill shall be below the contraction scour elevation but not more than 6'-0" below the flowline elevation.

WALL PIER ON SINGLE ROW OF PILES

Figure 409-6B

Back

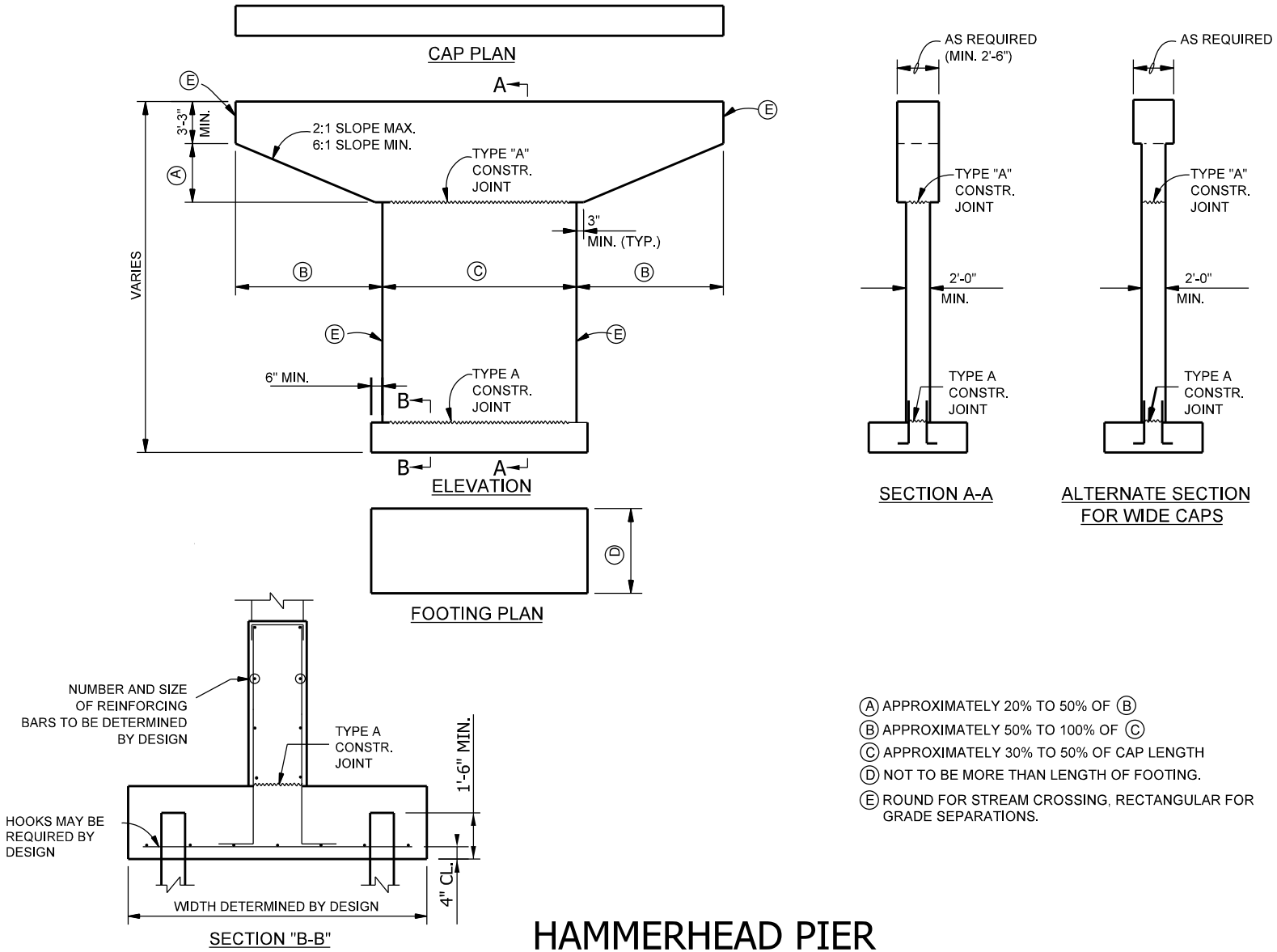

HAMMERHEAD PIER

Figure 409-6C

Back

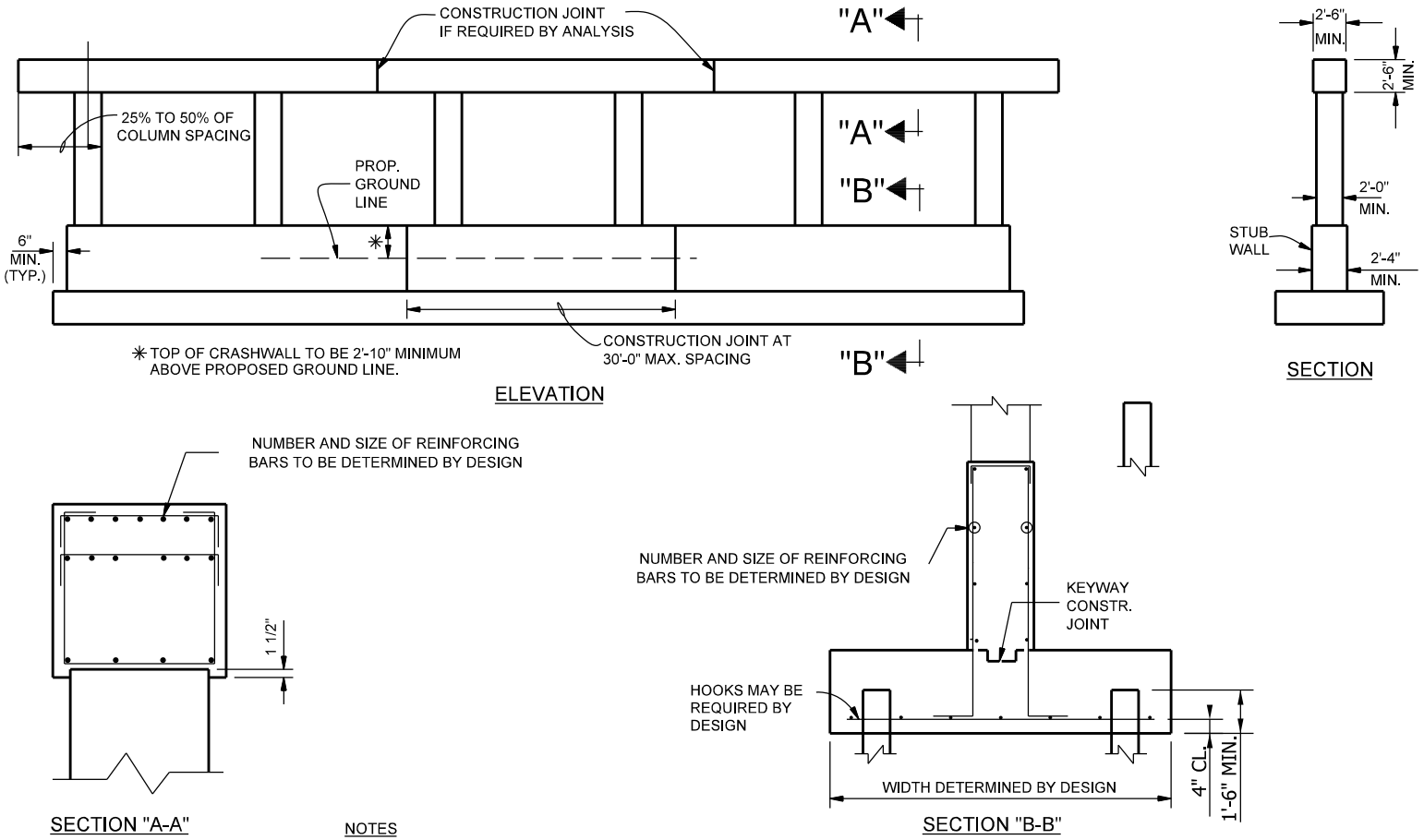

NOTES

1. MINIMUM COLUMN SPACING TO BE 9'-2".
2. MINIMUM OF 3 COLUMNS.
3. BENT TO BE DESIGNED AS FRAME BENT.
4. COLUMN STEEL TO EXTEND INTO FOOTING.
5. CONSTRUCTION JOINTS IN CAP TO BE PLACED TO MISS BEARINGS AND COLUMNS.
6. PILES TYPE AND SIZE AS DETERMINED BY GEOTECHNICAL REPORT.

GEOMETRICS FOR FRAME BENT WITH SOLID STUB WALL

Figure 409-6D

Back

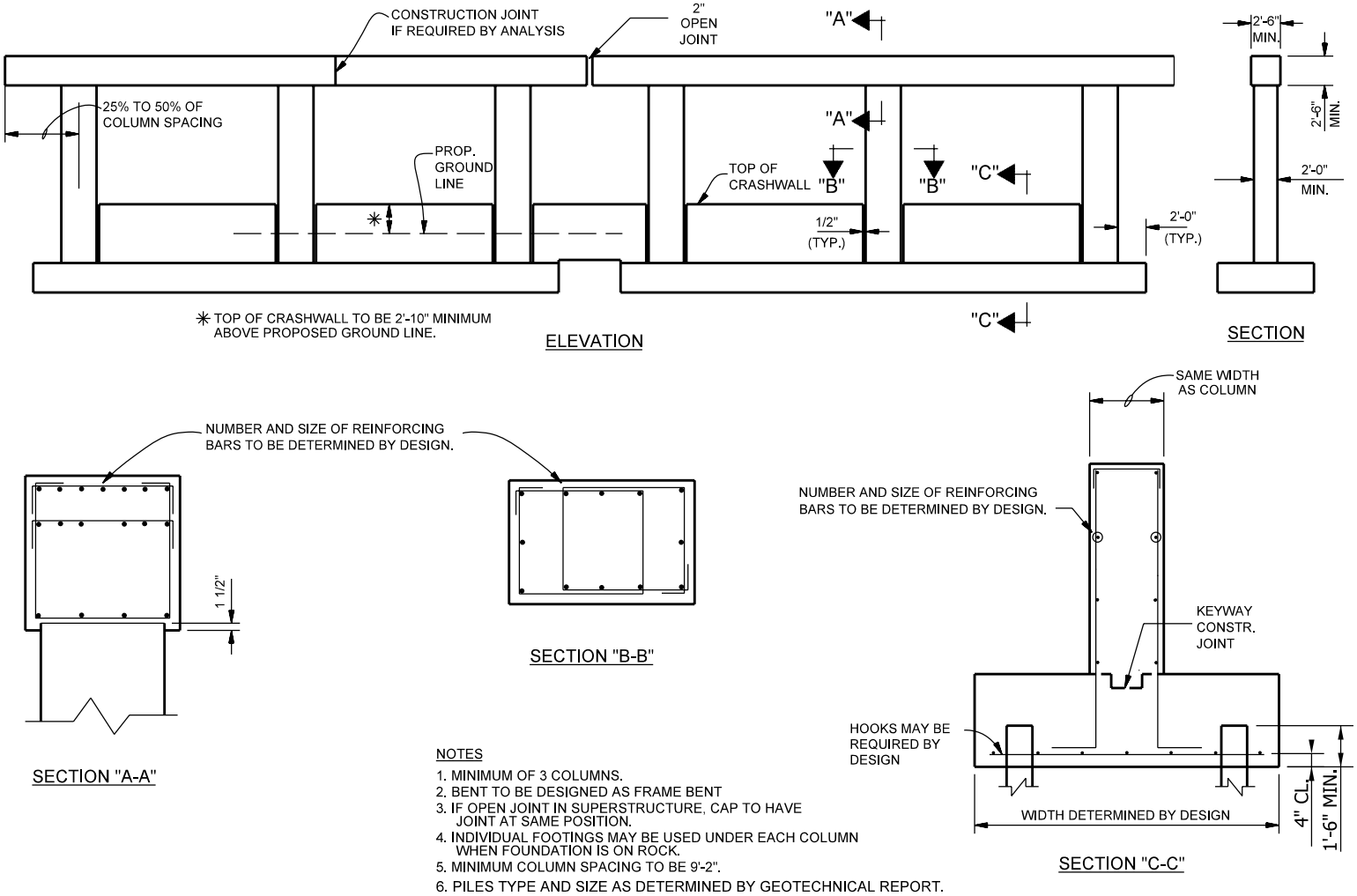

GEOMETRICS FOR FRAME BENT WITH INDIVIDUAL CRASHWALLS

Figure 409-6E

Back

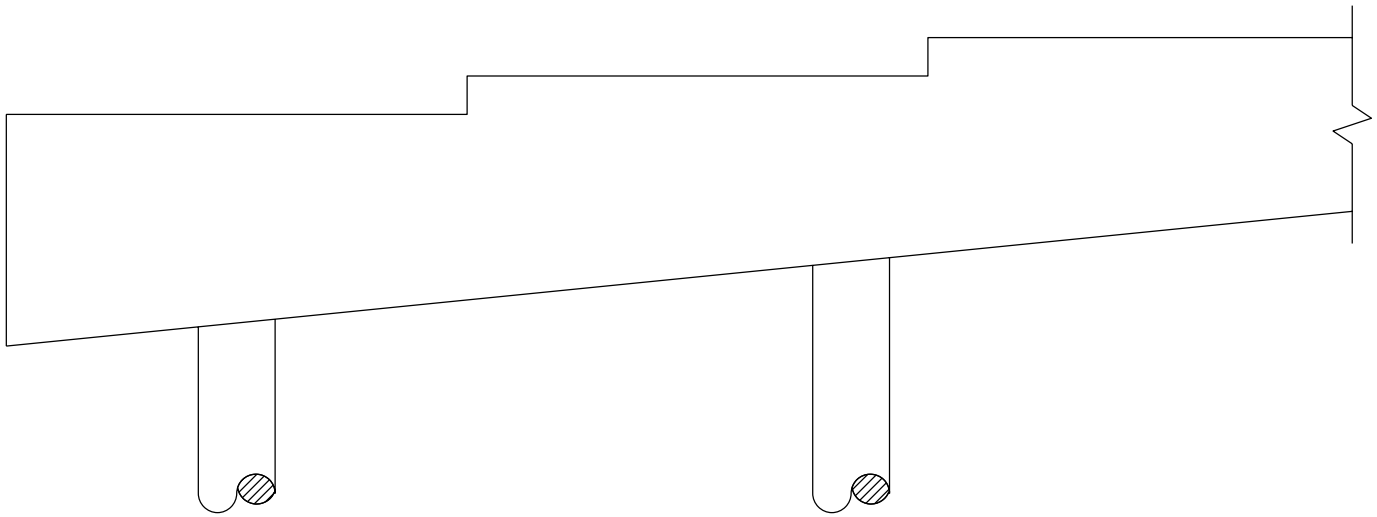

STEP CAP

Figure 409-6F

Back

NOTE:
CROSS TIES SHALL BE PLACED AT ALTERNATE VERTICAL BARS AND BE SPACED AT 2'-0" MAX. HORIZONTALLY AND 1'-0" MAX. VERTICALLY.

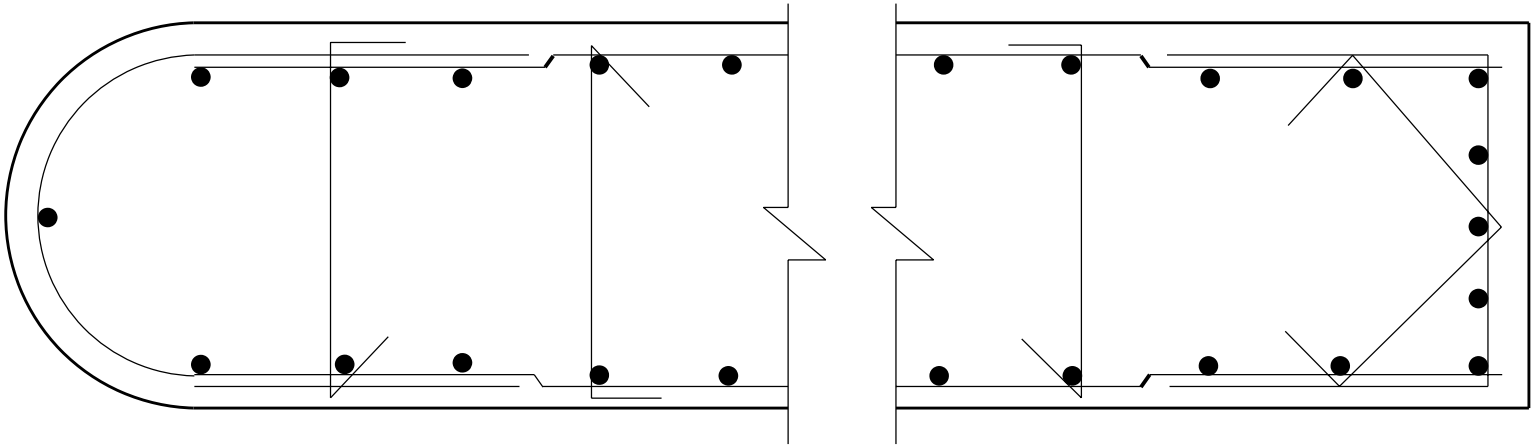

ROUND NOSE

SQUARE NOSE

SUGGESTED REINFORCING DETAILS FOR WALL OR HAMMERHEAD PIER

Figure 409-6G

Back

Bearing Type	Load		Translation		Rotation	Costs	
	Min. (kip)	Max. (kip)	Min. (in.)	Max. (in.)	Limit (rad)	Initial	Maint.
Elastomeric Pad							
Plain (PEP)	0	100	0	0.5	0.010	Low	Low
Cotton Duck (CDP)	0	315	0	0.25	0.003	Low	Low
Fiberglass (FGP)	0	135	0	1	0.015	Low	Low
Steel Reinforced Elastomeric	50	1007	0	4	0.04	Low	Low
Flat Polytetrafluoroethylene (PTFE) Slider	0	> 2250	1	> 4	0	Low	Moderate
Curved Sliding Cylindrical	0	1575	0	0	> 0.04	Moderate	Moderate
Pot	270	2250	0	0	0.02	Moderate	High
Rocker	0	405	0	4	> 0.04	Moderate	High
Single Roller	0	100	1	> 4	> 0.04	Moderate	High
Curved PTFE	270	1575	0	0	> 0.04	High	Moderate
Multiple Rollers	112	2250	4	> 4	> 0.04	High	High

SUMMARY OF EXPANSION-BEARING CAPABILITIES

Figure 409-7A

Back

Maximum $DL + LL$ Reaction, (kip)	Maximum Expansion Length, (ft)	Bearing-Pad Type	W (in.)	L (in.)	Area (in.^{2})	Shape Factor, S	h_{rt} (in.)	Number of Internal Elastomeric Layers, n	Allowable Compressive Stress, σ_{TL} (psi)
124	230	**1**	14	10.5	147	6.00	2.0625	3	844
143	285	**2**	14	11.5	161	6.31	2.5625	4	887
190	285	**3**	18	11	198	6.83	2.5625	4	960
324	340	**4**	24	12	288	8.00	3.0625	5	1125

ELASTOMERIC BEARING PAD TYPES, PROPERTIES, AND ALLOWABLE VALUES FOR AASHTO I-BEAMS

Figure 409-7B

Back

Maximum $DL + LL$ Reaction, (kip)	Maximum Expansion Length, (ft)	Bearing-Pad Type	W (in.)	L (in.)	Area (in.^{2})	Shape Factor, S	h_{rt} (in.)	Number of Internal Elastomeric Layers, n	Allowable Compressive Stress, σ_{TL} (psi)
249	285	**5A**	22	11	242	7.33	2.5625	4	1031
122	285	**5B**	12	12	144	6.00	2.5625	4	844
213	285	**6A**	22	10	220	6.88	2.5625	4	968
107	285	**6B**	12	11	132	5.74	2.5625	4	807
178	230	**7A**	22	9	198	6.39	2.0625	3	899
92	230	**7B**	12	10	120	5.45	2.0625	3	766

ELASTOMERIC BEARING PAD TYPES, PROPERTIES, AND ALLOWABLE VALUES FOR BOX BEAMS

Figure 409-7C

Back

Maximum *DL* + *LL* Reaction, (kip)	Maximum Expansion Length, (ft)	Bearing-Pad Type	*W* (in.)	*L* (in.)	Area (in.^{2})	Shape Factor, *S*	h_{rt} (in.)	Number of Internal Elastomeric Layers, *n*	Allowable Compressive Stress, σ_{TL} (psi)
306	341	**T1**	23	12	276	7.89	3.0623	5	1109
394	396	**T2**	23	14	322	8.70	3.5625	6	1224
452	532	**T3**	23	17	391	8.23	4.7812	7	1157
570	598	**T4**	24	19	456	8.93	5.3750	8	1250
547	341	**TH1**	36	12	432	9.00	3.0623	5	1266
714	396	**TH2**	36	14	504	10.88	3.5625	6	1418
837	532	**TH3**	36	17	612	9.72	4.7812	7	1367
1007	598	**TH4**	36	19	684	10.47	5.3750	8	1472

Note: Bearing pads with T designation are for Indiana bulb-tee members. Bearing pads with TH designation are for wide bulb-tee members.

ELASTOMERIC BEARING PAD TYPES, PROPERTIES, AND ALLOWABLE VALUES FOR INDIANA BULB-TEE AND WIDE BULB-TEE MEMBERS

Figure 409-7D

Back

Maximum $DL + LL$ Reaction, (kip)	Maximum Expansion Length, (ft)	Bearing-Assembly Type	W (in.)	L (in.)	Area (in.^{2})	Shape Factor, S	h_{rt} (in.)	Number of Internal Elastomeric Layers, n	Allowable Compressive Stress, σ_{TL} (psi)
57	174	**S1-a**	11	8	88	4.63	1.5625	2	651
57	230	**S1-b**	11	8	88	4.63	2.0625	3	651
78	174	**S2-a**	12	9	108	5.14	1.5625	2	723
78	230	**S2-b**	12	9	108	5.14	2.0625	3	723
103	230	**S3-a**	13	10	130	5.65	2.0625	3	795
103	285	**S3-b**	13	10	130	5.65	2.5625	4	795
147	285	**S4-a**	15	11	165	6.35	2.5625	4	893
147	341	**S4-b**	15	11	165	6.35	3.0625	5	893
185	285	**S5-a**	16	12	192	6.86	2.5625	4	965
185	341	**S5-b**	16	12	192	6.86	3.0626	5	965
288	341	**S6-a**	20	13	260	7.88	3.0625	5	1108
288	396	**S6-b**	20	13	260	7.88	3.5625	6	1108
362	396	**S7-a**	20	15	300	8.57	3.5625	6	1205
362	452	**S7-b**	20	15	300	8.57	4.0625	7	1205

ELASTOMERIC BEARING ASSEMBLY TYPES, PROPERTIES, AND ALLOWABLE VALUES FOR STRUCTURAL-STEEL MEMBERS

Figure 409-7E

Back

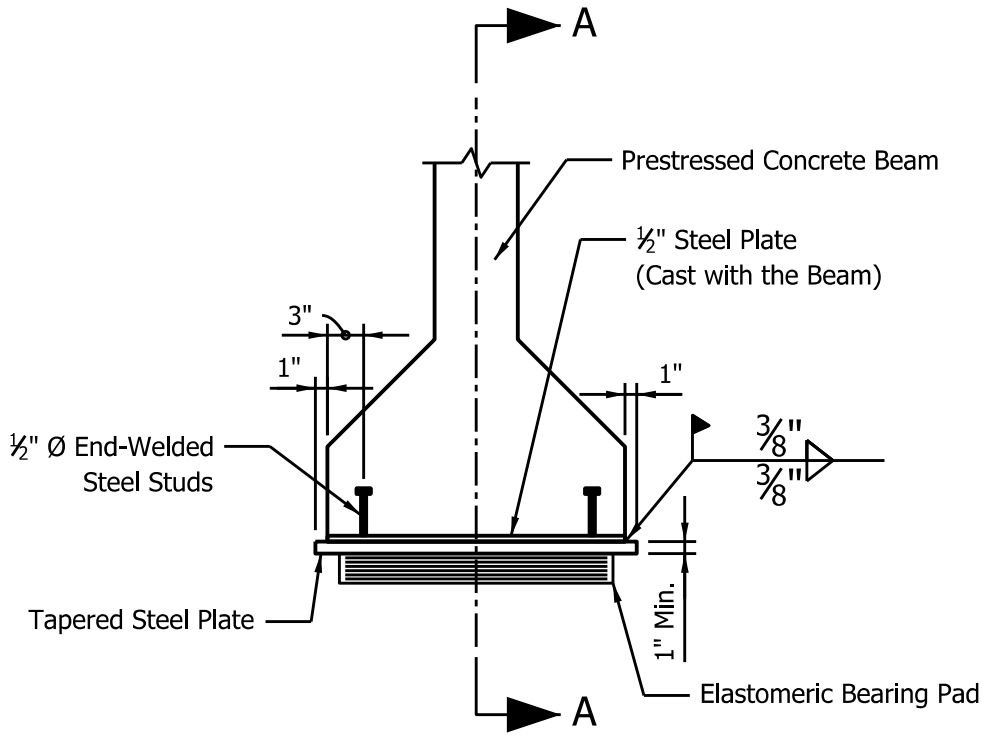

END VIEW

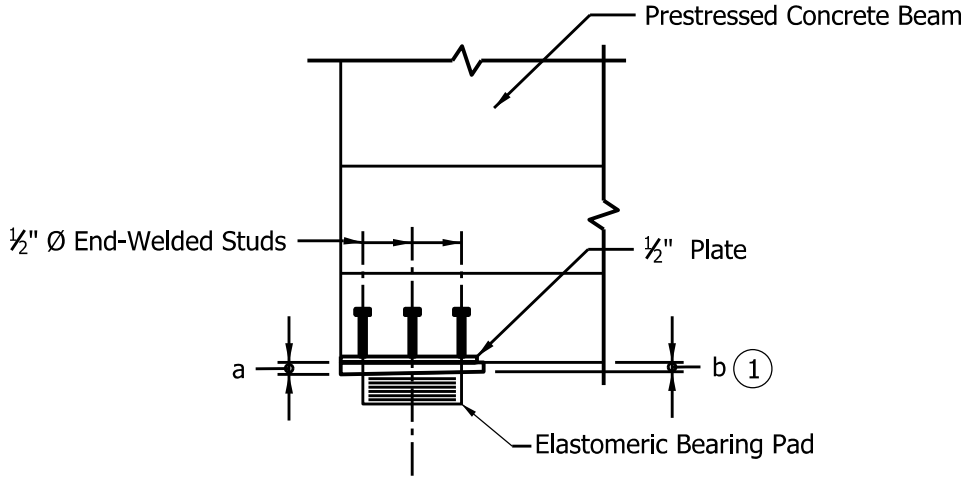

SECTION A-A

NOTES:

(1) Taper top of steel plate to the nearest $\frac{1}{16}$" to correct for slope.

2. When stainless steel is specified, plate cast with beam, studs, and weld must all be specified as stainless steel.

ELASTOMERIC BEARING PAD WITH TAPERED STEEL PLATE

Figure 409-7F

Back

Grade of Steel	Minimum Tensile Strength, F_U, (ksi)	Nominal Shear Resistance, R_n, (kip) *					
		Anchor Bolts, threads included **			Threads excluded, or pintles included **		
		1 in.	1 1/8 in.	1 3/8 in.	1 in.	1 1/8 in.	1 3/8 in.
A 307	60	17.9	22.7	33.9	17.9	22.7	33.9
A 325 High Strength	120	35.8	n/a	n/a	45.2	n/a	n/a
	105	n/a	39.7	59.2	n/a	50.1	74.8

* *One shear plane is assumed. Resistance value should be multiplied by number of shear planes.*

** *Value should be multiplied by 0.80 for a connection longer than 50 in.*

NOMINAL SHEAR RESISTANCE OF ANCHOR BOLTS AND PINTLES

Figure 409-7G

Back

No. of Anchor Bolts	Diameter (in)	Span Length Range (ft)
4	1	20 ≤ Span < 100
4	1 1/8	100 ≤ Span < 150
4	1 3/8	Span ≥ 150

MINIMUM CONNECTIONS FOR FIXED STEEL SHOES

Figure 409-7H

Back

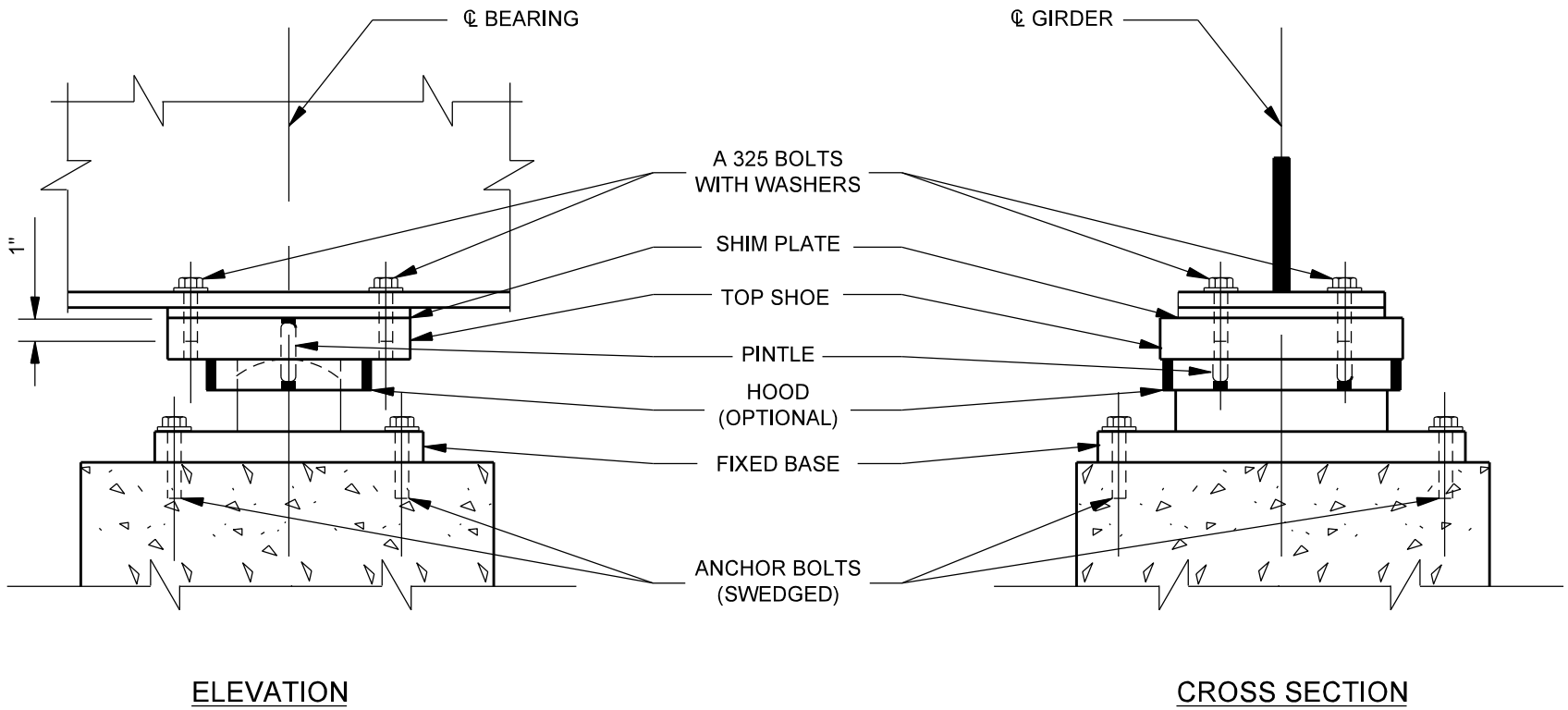

FIXED SHOE ASSEMBLY

Figure 409-7 I

Back

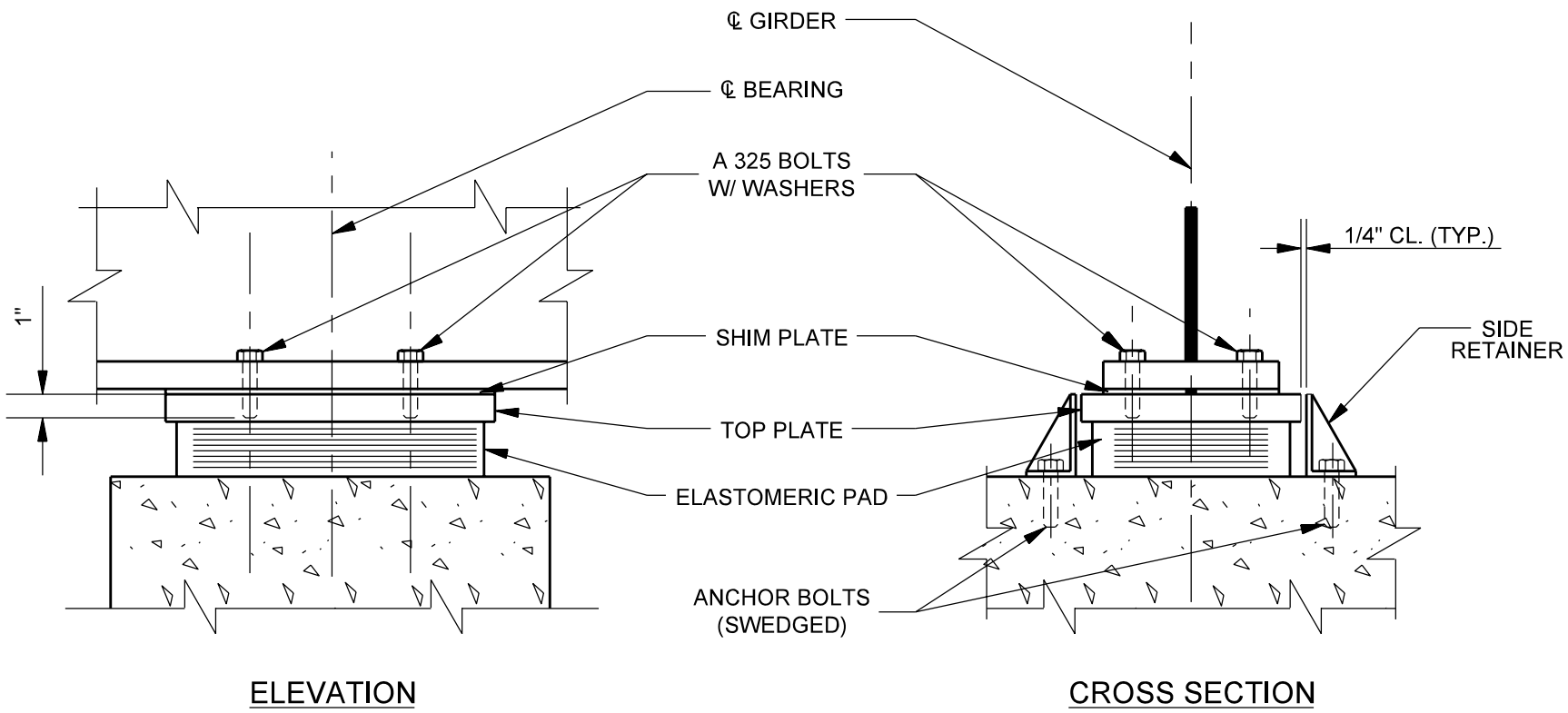

ELASTOMERIC BEARING ASSEMBLY

Figure 409-7J

Back

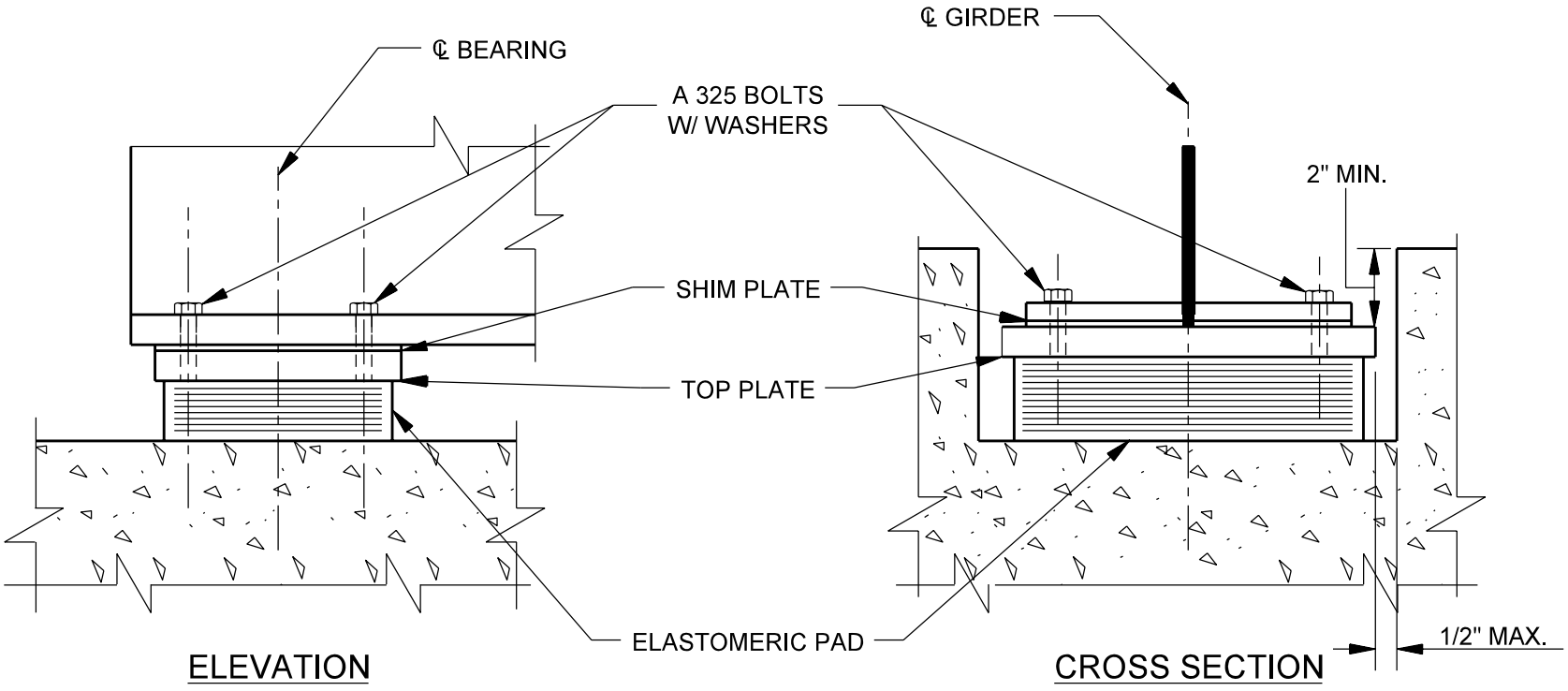

ELASTOMERIC BEARING ASSEMBLY

Figure 409-7K

Back

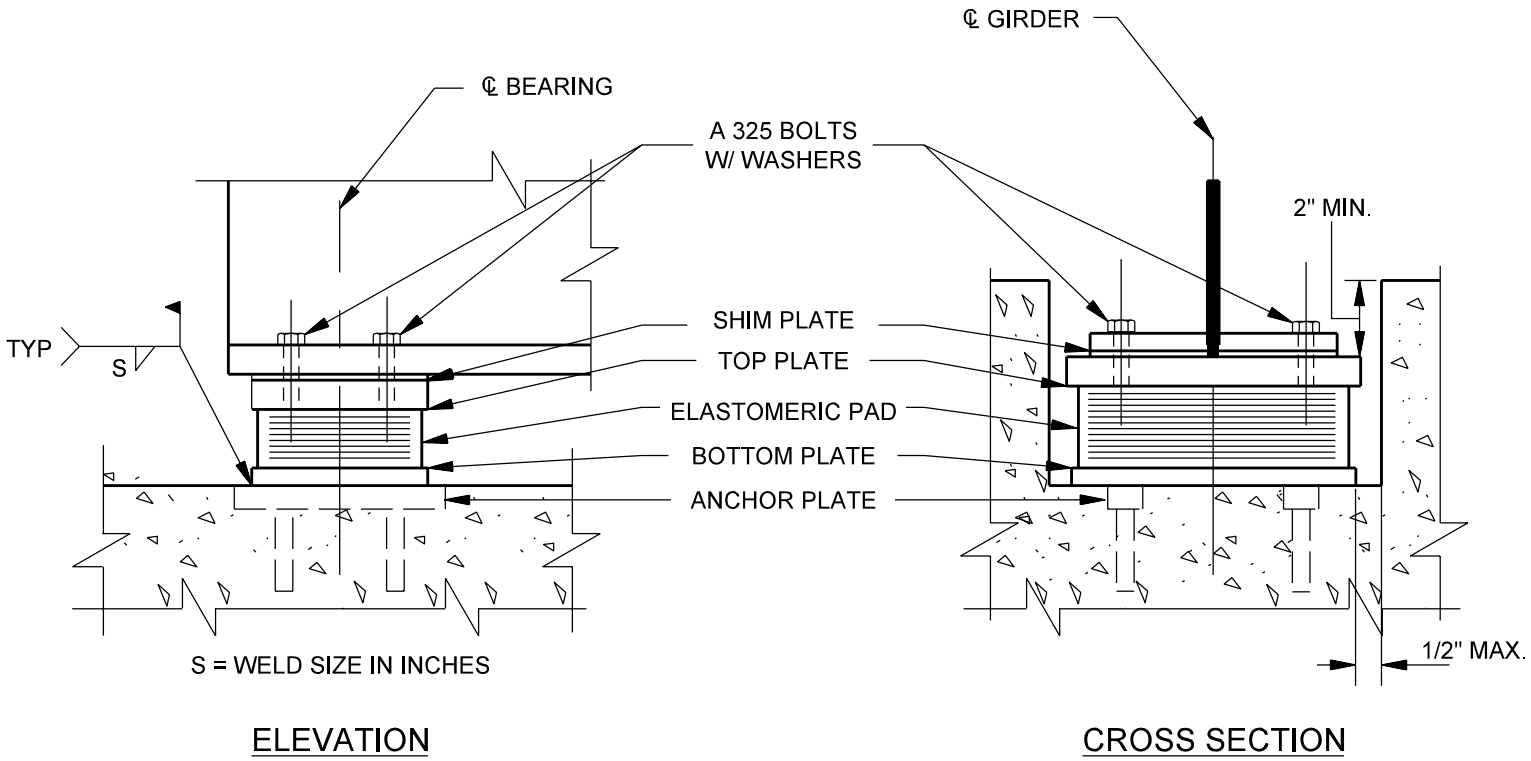

ELASTOMERIC BEARING ASSEMBLY WITH BOTTOM PLATE

Figure 409-7L

Back

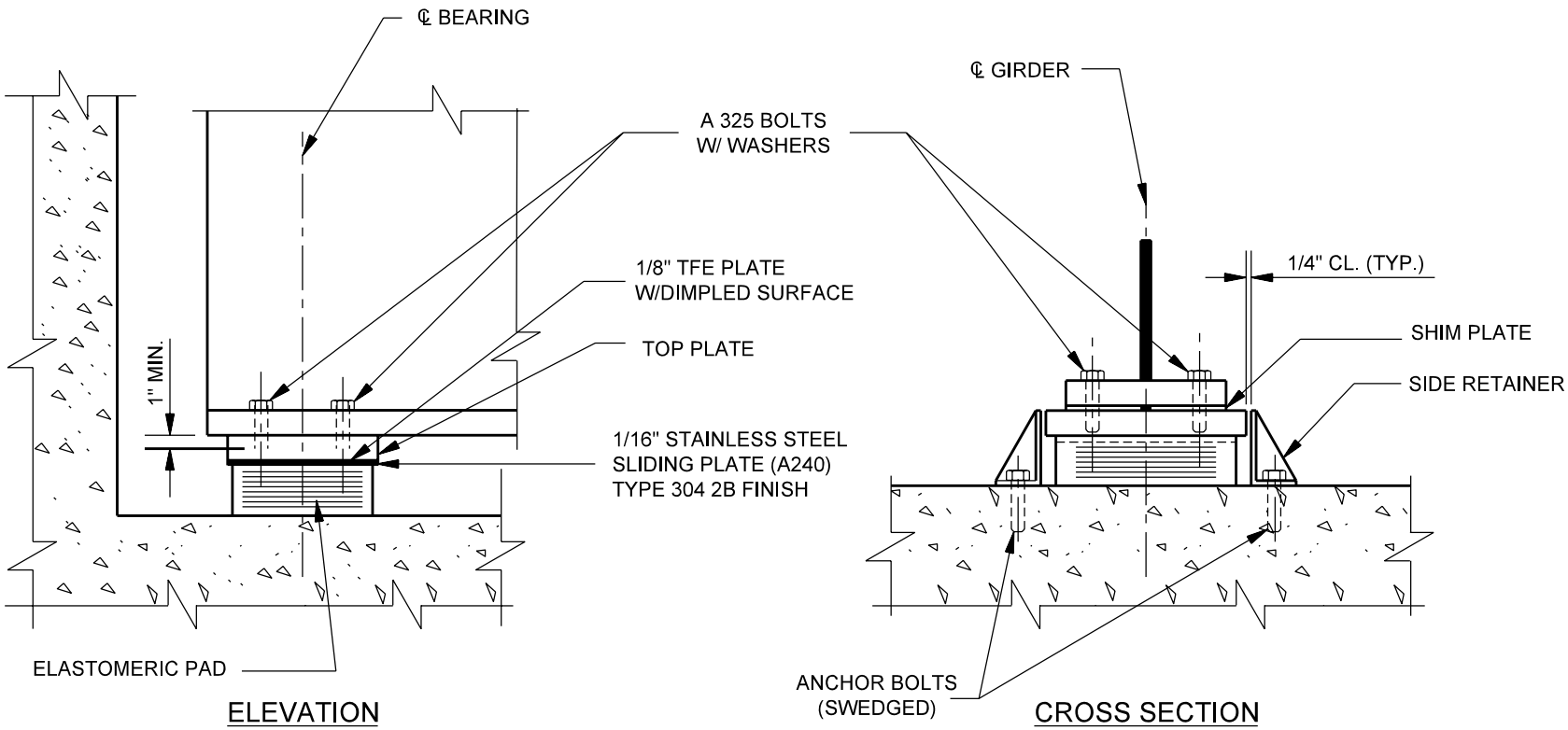

PTFE ELASTOMERIC BEARING ASSEMBLY

Figure 409-7M

Back