CHAPTER 407

Steel Structure

TABLE OF CONTENTS

LIST OF FIGURES 5

407-1.0 GENERAL 6
407-1.01 Economy 6
407-1.01(01) Rolled Beams vs. Welded Plate Girders 7
407-1.01(02) Number of Beam or Girder Lines 7
407-1.01(03) Spacing 8
407-1.02 Plate-Girder Design Considerations 8
407-1.02(01) General 8
407-1.02(02) Haunched Girders 8
407-1.02(03) Longitudinally-Stiffened Web 8
407-1.02(04) Flange-Plate Size and Transitions 9
407-1.02(05) Field and Shop Splices 10
407-1.02(06) Web Plate 10
407-1.03 Continuous Structure 11
407-1.04 Composite Action 11
407-1.05 Horizontally-Curved Steel Girder 12
407-1.05(01) General 12
407-1.05(02) Details 12
407-1.06 Integral or Semi-Integral End Bent 13
407-1.07 Fracture-Critical Member 13
407-1.08 Other Design Considerations 14

407-2.0 MATERIALS 14
407-2.01 Structural Steels 14
407-2.01(01) Selection 14
407-2.01(02) Hybrid Girder 15
407-2.01(03) Details for Unpainted Weathering Steel 16
407-2.02 Bolts, Nuts, and Washers 17
407-2.03 Stud Shear Connectors 17
407-2.04 Weld Metal 17
407-2.05 Other Elements 17

407-3.0 LOADS AND LIMIT STATES 18
407-3.01 Limit States 18
407-3.02 Distribution of Dead Load 18
407-3.03 Live-Load Deflection 18

407-4.0 FATIGUE CONSIDERATIONS 19
407-4.01 Load-Induced Fatigue 19
407-4.01(01) Fatigue Stress Range 19

407-4.01(02) Fatigue Resistance 20
407-4.01(03) Stress Cycles 20
407-4.02 Distortion-Induced Fatigue 21
407-4.03 Other Fatigue Considerations 21

407-5.0 DIMENSIONING AND DETAILING REQUIREMENTS 22
407-5.01 Dead-Load Camber 22
407-5.01(01) General 22
407-5.01(02) Diagram 22
407-5.02 Minimum Thickness of Steel 23
407-5.03 Diaphragms and Cross Frames 23
407-5.03(01) General 23
407-5.03(02) Diaphragm Details 24
407-5.03(03) Cross-Frame Details 25
407-5.04 Jacking 25
407-5.05 Lateral Bracing 26
407-5.06 Heat-Curved Rolled Beam and Welded Plate Girder 26
407-5.07 Shims 26

407-6.0 I-SECTIONS IN FLEXURE 27
407-6.01 General 27
407-6.01(01) Negative Flexural Deck Reinforcement 27
407-6.01(02) Stiffness in Negative-Moment Areas 27
407-6.02 Strength Limit State 27
407-6.03 Service Limit State Control of Permanent Deformations 27
407-6.04 Shear Connectors 28
407-6.05 Stiffeners 28
407-6.05(01) Transverse Intermediate Stiffeners 28
407-6.05(02) Bearing Stiffeners 29
407-6.06 Cover Plates 29
407-6.07 Constructability 30

407-7.0 BOX SECTIONS IN FLEXURE 30
407-7.01 General 30
407-7.02 Flanges 30
407-7.03 Webs 31
407-7.04 Stiffeners 31
407-7.05 Top-Flange Horizontal Lateral Bracing 32
407-7.06 External Diaphragms and Cross Frames between Piers 32
407-7.07 Internal Diaphragms and Cross Frames Between Piers 33
407-7.08 Pier Diaphragms and Cross Frames 33
407-7.09 Field Splices 33

407-7.10 Bearings 33
407-7.11 Electric Service and Inspection Access 34
407-7.12 Constructability 34

407-8.0 CONNECTIONS AND SPLICES 35
407-8.01 Bolted Connections 35
407-8.02 Welded Connections 35
407-8.03 Splices 36

407-9.0 TRUSSES AND ARCHES 37

FIGURES 38

LIST OF FIGURES

Figure	Title
407-1A	Plate Thicknesses
407-1B	Flange Grouping for Fabrication
407-1C	Girder Weld Splice Details
407-1D	Safety Handrail Details
407-1E	Bearing Restraints
407-2A	Weathering Steel (Paint Limits)
407-2B	Drip Bar Details
407-4A	Annual Traffic Growth Rates
407-4B	Schematic of Top Flange Stress
407-5A	Beam Camber and Blocking Details
407-5B	Rolled Beam Intermediate Diaphragm Details
407-5C	Rolled Beam End Diaphragm Details
407-5D	Typical Intermediate Cross Frame Details
407-5E	Typical End Cross Frame Details
407-5F	Alternate End Cross Frame Details
407-5G	Stiffener and Connection Plate Details
407-5H	Connection Plate Details
407-5 I	Connection Plate Details
407-6A	Stud and Bolted Splice Details
407-6B	Stiffener Plate Details
407-7A	Box Girder Horizontal Control
407-7B	Box Girder Stiffener Option
407-7C	Moment – Connected Pier Diaphragm

CHAPTER 407

STEEL STRUCTURE

This chapter addresses structural-steel requirements in the *LRFD Bridge Design Specifications*, hereafter referred to as *LRFD*, which may require amplification, clarification, or an improved application. This chapter is intended to provide general guidance in LRFD design and detailing practices. The chapter is structured as follows:

1. Section 407-1.0 provides general information for which there is not a direct reference in *LRFD* Section 6.

2. Sections 407-2.0 through 407-9.0 provide information which augments and clarifies *LRFD* Section 6. To assist in using these Sections, references to *LRFD* are provided where applicable.

The discussion in this chapter is restricted to a multi-beam or multi-girder steel superstructure. Unless stated otherwise, the terms beam and girder are used interchangeably. This reflects the popularity of these systems because of their straightforward design, ease of construction, and the potential for aesthetic appearance.

407-1.0 GENERAL

407-1.01 Economy

Factors that influence the cost of a steel-girder bridge include, but are not limited to, the number of girders, the type of material, type and number of substructure units, amount of material, fabrication, transportation, and erection. The cost of these changes periodically, in addition to the cost relationship among them. Therefore, the guidelines used to determine the most economical type of steel girder on one bridge must be reviewed and modified as necessary for another bridge.

Based upon market factors, the availability of steel can be an issue in satisfying the construction schedule. It is the responsibility of the bridge designer to verify the availability of the specified steel. The bridge designer should contact structural-steel producers to ensure the availability of rolled beams and plates.

A steel plate girder should be designed to optimize weight savings in correlation with fabrication and erection costs. The top flanges of a compositely-designed plate girder are typically smaller than their bottom flanges. The flange section is varied along the length of the bridge following the moment envelope to save cost by offsetting the increased fabrication costs of welded flange transitions with larger savings in material costs. To save in total costs, minimum web thicknesses are increased to avoid the use of stiffeners.

The load-carrying capacity of an exterior beam or girder shall not be less than that of the interior beams or girders as described in *LRFD* 4.6.2.2.1.

Weathering steel, unpainted Grades 50W and HPS70W should be used if possible to lower the initial construction costs and future maintenance costs. Aesthetic considerations limit the application of weathering steel in a high-visibility application, because the inherent staining of the substructures may not be desirable. See Section 407-2.01(01) for other factors limiting the use of weathering steel.

407-1.01(01) Rolled Beams vs. Welded Plate Girders

If rolled beams are specified, the selected sections shall be ensured to be available. Welded plate girders should be specified instead of rolled beams for the conditions as follows:

1. the bridge has a radius of less than 1200 ft. due to fabrication limitations;
2. the span lengths exceed the span capacity of rolled sections, or
3. the camber is too large to be accommodated in the natural camber of the beam.

407-1.01(02) Number of Beam or Girder Lines

The lowest number of beam lines in the cross section, as compatible with deck design requirements, provides the most economical bridge in the absence of girder-depth restrictions. In considering the economy of the bridge and number of beam or girder lines, the evaluations to be made are as follows:

1. the available depth of superstructure governed by vertical clearance requirements;
2. the increase or decrease in approach roadway costs;
3. the increase or decrease in deck thickness and reinforcement requirements; and
4. the cost of stiffeners versus increased web thickness.

An INDOT-route bridge requires a minimum of four steel-beams or plate-girders lines, or four web lines for steel box girders. Future maintenance and rehabilitation shall be considered in determining the number of beams or girders in a cross section.

407-1.01(03) Spacing

The beams or girders should be spaced uniformly across the width of the bridge. The maximum spacing of rolled beams should not exceed 11 ft. The maximum spacing of plate girders should not exceed 12.5 ft. The location of the exterior beam or girder is controlled by the minimum and maximum overhang widths that are specified in Section 404-3.02 and the space required for deck drains if required.

407-1.02 Plate-Girder Design Considerations

In addition to the information shown in *LRFD*, the following applies to the design of structural-steel plate girders.

407-1.02(01) General

Plate girders shall be made composite with the bridge deck and should be continuous over interior supports where applicable.

To achieve economy in the fabrication shop, all girders in a multi-girder bridge should be identical.

407-1.02(02) Haunched Girders

Where practical, constant-depth girders, or girders with constant web depths, shall be used. Haunched girders are generally uneconomical for spans of less than 300 ft. They may be used where aesthetics or other special circumstances are involved, but constant-depth girders will generally be more cost effective.

407-1.02(03) Longitudinally-Stiffened Web

A longitudinally-stiffened web shall not be used. In addition to being considered uneconomical, the ends of longitudinal stiffeners are fatigue sensitive if subject to applied tensile stresses.

Therefore, where used, they must be ended in zones of little or no applied tensile stresses.

407-1.02(04) Flange-Plate Size and Transitions

The minimum flange-plate size for a plate girder is 12 in. by ¾ in. For curved girders, the minimum flange thickness is 1 in. As wide a flange plate as practical should be used, consistent with stress and flange width/thickness ratio, *b*/*t*, requirements. The wide flange contributes to girder stability and reduces the number of passes and weld volume at flange butt welds. The flange width should be in increments of 2 in. Typically,the maximum flange thickness is 3 in. Figure 407-1A provides commonly-specified plate thicknesses.

Within a single field section, i.e., an individual shipping piece, the width of each flange should be of constant width. Typically, only flange thicknesses, not widths, are varied within a field section. A design of multiple identical girders with constant-width flanges minimizes fabrication costs.

Flanges shall be proportioned so that the fabricator can economically cut them from structural plate steel between 60-in., preferably 72-in., and 96-in widths. Flanges should be grouped to provide an efficient use of the plates. Because structural-steel plate is most economically purchased in these widths, it is advantageous to repeat plate thicknesses as much as practical. Many of the plates of like width can be grouped by thickness to satisfy the minimum-width purchasing requirement, but this economical purchasing strategy may not be possible for thicker, less-used plates.

The most efficient method to fabricate flanges is to groove-weld together several wide plates of varying thicknesses received from the mill. After welding and non-destructive testing, the individual flanges are stripped from the full plate. This method of fabrication reduces the number of welds, individual runoff tabs for both start and stop welds, the amount of material waste, and the number of X-rays for non-destructive testing. The obvious objective, therefore, is for flange widths to remain constant within an individual shipping length by varying material thickness as required. Figure 407-1B illustrates the efficient fabrication of girders.

Constant flange width within a field section may not always be practical in a span of over 300 ft where a flange-width transition may be required in the negative bending region. Though not preferred, if a width transition must be provided, the butt splice shall be shifted a minimum of 3 in. from the transition into the narrower flange plate. This 3-in. shift makes it simpler to fit run-off tabs, weld, and test the splice and then grind off the run-off tabs.

407-1.02(05) Field and Shop Splices

Field and shop splices shall be designed in accordance with *LRFD* 6.13.6. Field splices are expensive and their number should be minimized. Field splices are used to reduce shipping length. The flange cross-sectional area should be reduced by not more than approximately 25% of the area of the heavier flange plate at the splice location.

Not more than two shop flange splices, or three plate thicknesses, should be included in the top or bottom flange within a single field section. Constant flange widths should be maintained within a field section for economy of fabrication as specified in Section 407-1.02(04). In determining the points where changes in plate thickness occur within a field section, the cost of groove-welded splices should be compared against the extra plate area. The National Steel Bridge Alliance (NSBA) or local fabricators should be consulted if possible to ascertain current costs. The flange cross-sectional area should be reduced by not more than 50% of the area of the heavier flange plate at the shop splices to reduce the buildup of stresses at the transition. Typically 400 to 700 lb of steel must be saved to justify the cost of a groove-welded shop splice.

The thicker plate can often be continued beyond the theoretical step-down point to avoid the cost of the groove-welded splice.

To facilitate testing of the weld, flange shop splices shall be located at least 2 ft away from web splices. Flange and web shop splices shall be located at least 6 in. from transverse stiffeners. See Figure 407-1C for typical plate-girder welded-splice details.

407-1.02(06) Web Plate

Preliminary design services available through the NSBA and some steel companies can be used for the optimization of the web depth as a starting point. Preliminary line-girder analysis shall be performed to optimize the girder geometrics for cost. Other programs or methods can also be used if they are based upon material use and fabrication unit costs. Web depth should be in 1-in. or, preferably, 2-in. increments. Web thickness should be in 1/16-in. increments. The web of a plate girder is typically deeper and thinner than that of a rolled beam.

Web design can have a significant impact on the overall cost of a plate girder. Considering material costs, it is desirable to make the girder web as thin as design considerations will permit. However, this may not always produce the greatest economy, since fabricating and installing stiffeners is one of the more labor-intensive of shop operations.

The use of transverse stiffeners should be determined using the following guidelines and, except for diaphragm connections, should be placed on only one side of the web.

WEB DEPTH, *d*	STIFFENER USAGE
< 4'-4"	None
4'-4" ≤ *d* ≤ 5'-6"	Partial
> 5'-6"	Full

An unstiffened web is the thinnest web allowed by *LRFD* without transverse stiffeners. A partially-stiffened web is approximately 1/16 in. thinner than an unstiffened web. A fully-stiffened web is the thinnest web allowed by *LRFD* in combination with the maximum number of transverse stiffeners. A minimum web thickness of 1/2 in. shall be used.

For webs of at least 72 in. depth, safety handrails shall be considered for future inspection. See Figure 407-1D for details.

407-1.03 Continuous Structure

Span-by-span continuity enhances both the strength and rigidity of the structure. However, the most significant benefit of structural continuity is the reduction in the number of deck expansion joints. Open or leaking deck joints can cause damage to beam ends, diaphragms, bearings, bent caps, or pier caps. See Section 404-2.06 for more discussion on bridge-deck expansion joints.

407-1.04 Composite Action

Composite action enhances both the strength and rigidity of the beam. Composite action is mandatory in the positive-moment region. Composite action is preferred in the negative-moment regions.

Deck concrete should be considered effective in the negative-moment region for determining live-load deflection at the Service Limit state. For design, concrete in tension is ignored in checking the Strength Limit state. The deck reinforcing steel can be considered to act with the steel section if shear connectors are provided. The composite-section slab depth shall be reduced by 0.5 in. due to the wearing surface.

407-1.05 Horizontally-Curved Steel Girder

407-1.05(01) General

LRFD 6.10 includes horizontally curved girders as a part of the requirements for the resistance of I-shaped girders. Analysis methodologies that describe the required levels of analysis are also specified, including the following.

1. The span, radius, and skew of the girder determine whether the curvature must be considered in the analysis.

2. Curved steel girders are always considered noncompact in the positive-moment region. Therefore, the maximum nominal bending stress is F_y.

3. *LRFD* Appendix A or B shall not be used.

4. Lateral flange bending stresses due to torsion must be considered. As a result, a curved steel plate-girder bridge usually has wider flanges than a straight steel bridge.

5. Horizontal curvature causes a variable load distribution that increases from inside to outside of the curve. Theoretically, flange and web sizes can be different for each girder. The economic benefits associated with grouping plate sizes shall be considered. The girders shall be grouped, using identical flange sizes for the exterior and first interior girder, the second and third interior girder, etc. Incrementally increasing the web depth from inside to outside of curve shall be considered. This practice can cause the outside girders to become too stiff, drawing too much moment to the outside exterior girder.

407-1.05(02) Details

Cross frames and diaphragms shall be considered primary members. A curved steel simple-span or continuous-span bridge shall have its diaphragms directed radially, except for end diaphragms, which should be placed parallel to the centerline of bearings.

Diaphragms, including their connections to the girders, shall be designed to carry the total load to be transferred at each diaphragm location. Cross frames and diaphragms should be as close as practical to the full depth of the girders.

A bridge expands and contracts in all directions. For a bridge that is long in relationship to its width, the transverse expansion is ignored. For an ordinary geometric configuration where the bridge length is long relative to the bridge width and the curvature is moderate, the unique

expansion characteristics of a curved structure need not be considered. In an urban area, a wide sharply-curved structure may be required. For this situation, multi-rotational bearings shall be considered, and restraint shall selectively be provided either radially or tangentially to accommodate the thermal movement of the structure as the bridge tries to expand in all directions. See Figure 407-1E for additional geometric information.

Flange splices shall be designed to carry flange bending or lateral bending stresses and vertical bending stresses in the flanges.

407-1.06 Integral or Semi-Integral End Bent

Section 409-2.01 discusses the design of an integral or semi-integral end bent. The following applies to the use of integral or semi-integral end bents in combination with a steel superstructure.

1. Bridge Length. Integral end bents may be used with a structural-steel bridge where the superstructure expansion length from the superstructure point of no movement to the integral end bent does not exceed the value shown in Figure 409-2A.

2. Deck Pour. An interior diaphragm shall be placed within 10 ft of the end support to provide beam or girder stability during the deck pour.

3. Anchorage. Each steel beam or girder should have stiffener plates of 1/2-in. thickness welded to both sides of the web and the flanges over the supports to anchor the beam into the concrete cap. A minimum of three holes should be provided through the web to allow #6 bars to be inserted to further anchor the beam to the cap.

407-1.07 Fracture-Critical Member

A fracture-critical member is a steel component in tension whose failure is expected to result in the collapse of the bridge or the inability of the bridge to perform its function.

The member or member components which are Fracture Critical Members (FCM) shall be determined. Such members or member components should be identified on the plans. The INDOT *Standard Specifications* address non-fracture-critical members. If a structure includes fracture-critical members or steel main members with yield strength of greater than 50 ksi, a unique special provision must be prepared to specify the Charpy V-notch requirements. All

member or member components designated as FCM shall be in accordance the ANSI/AASHTO/AWS D1.5 *Bridge Welding Code*, Section 12.

Indiana is in temperature-zone designation 2, minimum service temperature 0 °F to -30 °F, with respect to Charpy V-notch impact requirements.

407-1.08 Other Design Considerations

At the stress-limit state, a beam should be designed for the sum of the steel and concrete-slab dead loads acting on the beam alone, plus the superimposed dead load and live load acting on the composite section. Shrinkage shall be considered only for a long span or other unusual configurations. At the Strength Limit state for a compact section, large-scale inelastic activity is presumed to rearrange stress distributions in a section such that the history of stress build-up need not be considered. In a non-compact section where the factored flexural resistance is limited to the yield stress, the history of stress build-up must be considered.

LRFD Appendix D6 provides formulas for computing the plastic moment for both the positive- and negative-moment section. It also explains procedures for determining the yield moment of a composite section. *LRFD* Appendix C6 provides a step-by-step approach for the design of a steel-bridge superstructure.

407-2.0 MATERIALS

407-2.01 Structural Steels

407-2.01(01) Selection

The most common steel-grade choice is unpainted ASTM A709 Grade 50W weathering steel. Its initial cost advantage compared to painted high-strength steel, e.g., A 709 Grade 50, can range up to 15%. If compared to painted ASTM A709 Grade 36 steel, the cost advantage is approximately 20%. If future repainting costs are considered, the cost advantage is more substantial. This reflects, for example, environmental considerations in the removal of paint, which can make the use of painted steel prohibitive. Grade 36 steel is becoming less used and thus less available. The higher-strength ASTM A 709 Grade HPS 70W often carries a cost premium of approximately 10% compared to Grade 50W. *AASHTO Guide Specification for Highway Bridge Fabrication with HPS 70W Steel* should be used as a reference. A new high-performance steel with a minimum specified yield strength of 100 ksi has been introduced. It has yet to be proven cost-effective for girder bridge applications.

Despite its cost advantage, the use of weathering steel is not appropriate in every environment or at every location. The application of weathering steel and its potential problems are discussed in the FHWA *Technical Advisory: Uncoated Weathering Steel in Structures*, October 3, 1989. Also, the proceedings of the Weathering Steel Forum, July 1989, are available from the FHWA Office of Implementation, HRT-10. Weathering steel should not be used where the following adverse conditions exist.

1. Environment. Weathering steel should not be used in an industrial area where concentrated chemical fumes can drift onto the structure. Its suitability should be determined by a corrosion consultant.

2. Location. Weathering steel should not be used at a grade separation in a tunnel, which is produced due to a depressed roadway section with narrow shoulders between vertical retaining walls, with a shallow vertical clearance, with deep abutments adjacent to the shoulders, or with a wide bridge. This tunnel effect prevents roadway spray from being dissipated and spread by air currents. There is no evidence of salt-spray corrosion where the longitudinal extent of the vertical walls is limited to the abutment itself and roadway spray can be dissipated on both approaches.

3. Low-Level Water Crossing. Sufficient clearance over a body of water should be maintained so that water-vapor condensation does not result in prolonged periods of wetness on the steel. For weathering steel, clearance to the bottom flange should be at least 10 ft over sheltered, stagnant water and at least 8 ft above the average low-water level for a running stream.

Where unpainted weathering steel is inappropriate, and a concrete-members alternative is not feasible, the most economical painted steel is ASTM A709 Grade 50 steel in both webs and flanges.

FHWA *Technical Advisory: Uncoated Weathering Steel in Structures* is a source of information, but its recommendation for partial painting of the steel in the vicinity of deck joints should not be considered the first choice. The best solution is to eliminate the deck joints. In a shorter bridge, the end joint is replaced with an integral or semi-integral end bent (see Chapter 409).

407-2.01(02) Hybrid Girder

The use of HPS 70W steel in the top and bottom flanges of the negative flexure regions and the bottom flange of the positive moment regions, with Grade 50 steel in the top flange of the

positive moment regions and in the web throughout is generally considered to be the most economical design.

407-2.01(03) Details for Unpainted Weathering Steel

For integral or semi-integral end bents, the girder shall be painted for a distance of 1 ft from the front face of the each concrete diaphragm as shown in Figure 407-2A detail 1. If a joint is used, all superstructure steel shall be painted within 10 ft of the joint or within 1.5 times the web depth, whichever is greater as shown in Figure 407-2A detail 2. For an end bent surrounded by MSE walls, all superstructure steel shall be painted for a distance of 10 ft beyond the MSE wall as shown in Figure 407-2A detail 3. For interior bents or piers supporting continuous spans, all superstructure steel shall be painted for a distance of 10 ft beyond each side of the centerline of bent or pier as shown in Figure 407-2A detail 4.

The following drainage treatments should be considered to avoid premature deterioration.

1. A drip bead should be provided at the end of each deck overhang.

2. The number of bridge-deck drains should be minimized, the drainage pipes should be generous in size, and they should extend below the steel soffit as specified in Chapter 203.

3. Water or debris traps shall be eliminated. Overlapping surfaces exposed to water shall be sealed or painted. This applies to non-slip-critical bolted joints. Slip-critical bolted joints or splices should not produce rust-pack where the bolts are spaced according to *LRFD*, and, therefore, do not require protection.

4. A drip bar shall be placed transversely across the top of the bottom flange and across the bottom of the bottom flange downslope of the top plate in front of the substructure elements to prevent water from running off the flange onto the concrete; see Figure 407-2B.

5. Piers and abutments shall be wrapped with polyethylene sheeting during construction to minimize staining while the steel is exposed to rainfall.

6. If an expansion joint is used, the superstructure steel shall be painted within 10 ft of the joint.

7. Cold joints shall be located away from the beams or girders.

407-2.02 Bolts, Nuts, and Washers

High-strength bolts should be specified as follows.

1. Weathering Steel: 7/8 in. dia., A 325 Type 3. Open holes of 15/16 in. dia.

2. Painted Steel: 7/8 in. dia., A 325 Type 1. Open holes of 15/16 in. dia.

For a large structure, A 325 or A 490 bolts may be used of 1-in. diameter, with open holes of 1 1/16-in. diameter. A 490 bolt cannot be plated, galvanized, or mechanical zinc coated.

407-2.03 Stud Shear Connectors

Stud shear connectors shall be designed in accordance with *LRFD* 6.4.4.

407-2.04 Weld Metal

Weld metal shall be designed in accordance with *LRFD* 6.4.5.

407-2.05 Other Elements

If painted, ASTM A 709 Grade 50 steel is to be used in the web and flanges, all steel for stiffeners, secondary members, connections, and diaphragms should be ASTM A 709 Grade 36, unless a higher strength is justified due to significant forces in these members. Grade 36 steel shall not be used for these secondary members if unpainted weathering steel is used in the webs and flanges. Steel for all splices should be the same material as used in the web and flanges of the controlling section in a built-up girder.

For a steel bridge to be painted, the color shall be shown on the plans. See the INDOT *Standard Specifications* for a table of colors. For unpainted weathering steel, the color shall be as specified in Section 407-2.01(03).

407-3.0 LOADS AND LIMIT STATES

407-3.01 Limit States

See Section 403-1.02 for a discussion on limit states.

407-3.02 Distribution of Dead Load

See Section 403-2.0 for a discussion on the distribution of dead load.

407-3.03 Live-Load Deflection

Live-load deflection consideration is optional, as described in *LRFD* 2.5.2.6.2. Live-load plus dynamic-load allowance deflection is limited to 1/800 of the span length for the design of a steel beam or plate girder structure of simple or continuous spans. For a structure in an urban area used by pedestrians or bicyclists, live-load deflection should be limited to the 1/1000 of the span length. The span length used to determine deflection should be assumed to be the distance between centers of bearings or other points of support.

Live-load deflection should be evaluated in accordance *LRFD* 2.5.2.6.2. The deflection of the girders should be based on the stiffness of the short-term composite section, assuming the entire concrete deck to be fully effective over the entire span length. In effect, the distribution of live loads is the number of loaded lanes divided by the number of girders. The concrete deck should be considered to act compositely with the girder, though sections of the girder may not be designed as composite. If multiple lanes are loaded, multiple presence factors shall be applied as shown in *LRFD* Table 3.6.1.1.2-1.

For horizontally-curved girders, uniform participation of the girders should not be assumed. Instead, the live load should be placed to produce the maximum deflection in each girder individually in the span under consideration.

407-4.0 FATIGUE CONSIDERATIONS

407-4.01 Load-Induced Fatigue

LRFD 6.6.1.2 provides the framework of analysis to evaluate load-induced fatigue. This Section provides additional information on the implementation of *LRFD* 6.6.1.2 and defines interpretation of its requirements.

Load-induced fatigue is determined by the following:

1. the stress range induced by the specified fatigue loading at the point under consideration;

2. the number of repetitions of fatigue loading a steel component will experience during its 75-year design life. This is determined by using anticipated truck volumes; and

3. the nominal fatigue resistance for the Detail Category being investigated.

The use of Fatigue I or Fatigue II load combinations shall be in accordance with *LRFD* 6.6.1.2.3. Fatigue I load combination is utilized for a higher traffic volume and provides for infinite life. Fatigue II load combination is used in designing for a finite life. Components of fracture-critical members should be designed for an infinite life using Fatigue I load combination.

407-4.01(01) Fatigue Stress Range

1. Range. The fatigue stress range is the difference between the maximum and minimum stresses at a point subject to a net tensile stress, as described in LRFD 3.6.1.4. The stress range is caused by a single design truck that can be placed on the deck within the boundaries of a design lane. If a refined-analysis method is used, the design truck shall be positioned to maximize the stress at the point under consideration. The design truck should have a constant 30-ft spacing between the 32-kip axles. The dynamic load allowance is 0.15, and the fatigue load factor is 0.75.

2. Regions. Fatigue should be considered only in those regions of a steel member that experience a net applied tensile stress, or where the compressive stress of the unfactored permanent load is less than twice the maximum fatigue tensile stress.

3. Analysis. Unless a refined analysis method is used, the single-design-lane load distribution factor in *LRFD* 4.6.2.2 should be used to determine fatigue stresses. These tabularized distribution-factor equations incorporate a multiple presence factor of 1.2 that should be removed by dividing either the distribution factor or the resulting fatigue

stresses by 1.2. This division does not apply to distribution factors determined using the lever rule.

For a flexural member with shear connectors provided throughout its entire length, and with slab reinforcement satisfying *LRFD* 6.10.1.7, the live-load stress range may be computed using the short-term composite section assuming the concrete slab to be fully effective for both positive and negative flexure.

407-4.01(02) Fatigue Resistance

LRFD 6.6.1.2.5 groups the fatigue resistance of structural details into categories A through E′, which include two categories for axial tension in bolts. Detail Categories A, B, and B′ are seldom critical. Investigation of a detail with a fatigue resistance greater than Category C may be only occasionally appropriate. For example, Category B applies to base metal adjacent to slip-critical bolted connections and should be evaluated if thin splice plates or connection plates are to be used.

The fatigue resistance for a Fatigue I load combination and infinite life appears as LRFD Equation 6.6.1.2.5-1, as follows:

$$(\Delta F)_n = (\Delta F)_{TH}$$

The fatigue resistance for a Fatigue II load combination and finite life appears as LRFD Equation 6.6.1.2.5-2, as follows:

$$(\Delta F)_n = (A/N)^{1/3}$$

LRFD 6.6.1.2.5 should be referenced for additional fatigue checks for welds and base metal.

Fatigue resistance is independent of the steel strength. The application of a higher-grade steel causes the fatigue stress range to increase, but the fatigue resistance remains the same. This implies that fatigue can become a controlling factor where a higher-strength steel is used.

407-4.01(03) Stress Cycles

LRFD defines the number of stress cycles, N, in Equation 6.6.1.2.5-3, as follows:

$$N = (365)(75)\, n\, (\mathrm{ADTT})_{\mathrm{SL}}$$

where:

n = number of stress range cycles per truck passage. As defined in *LRFD* 6.6.1.2.5, for a simple or continuous span of less than 40 ft, n = 2.0. For a span of 40 ft or longer, n = 1.0. For a location within 0.1 of the span length from a continuous support, n = 1.5.

$(ADTT)_{SL}$ = Average Daily Truck Traffic in a single lane = (p)(ADTT), which is LRFD Equation 3.6.1.4.2-1.

p = the fraction of truck traffic in a single lane. This is defined in *LRFD* 3.6.1.4.2. If one direction of traffic is restricted, p should be taken as follows:

1 lane, p = 1.00
2 lanes, p = 0.85
3 or more lanes, p = 0.80

ADTT = the number of trucks per day in one direction averaged over the design life of the structure.

The portion of *LRFD* Equation 6.6.1.2.5-2 that is $(365)(75)(ADTT)_{SL}$ represents the total accumulated number of truck passages in a single lane during the 75-year design life of the structure. If site-specific values for the fraction of truck-traffic data are unavailable from the Planning Division, the values provided in *LRFD* Table C3.6.1.4.2-1 may be used.

Figure 407-4A provides the annual growth rate based on recommendations of the Planning Division's Traffic Monitoring Team. The designer should contact the Traffic Monitoring Team for more-specific and up-to-date annual growth rates which can be available.

407-4.02 Distortion-Induced Fatigue

LRFD 6.6.1.3.1 and 6.6.1.3.2 provide detailing practices for transverse and lateral connection plates intended to reduce significant secondary stresses which can induce fatigue-crack growth.

407-4.03 Other Fatigue Considerations

The designer is responsible for ensuring compliance with fatigue requirements for all structural details, e.g. stiffeners, connection plates, lateral bracing, etc., shown on the plans.

During construction, field personnel will desire to field-weld attachments, either permanent or temporary, to the top flange to facilitate setting deck forms and other appurtenances. The plans for a continuous structure should include a detail showing the location of compression, reversal, and tension regions along the girder top flange. The length of each stress region shall be shown. Each shall be referenced to the point of support. Figure 407-4B illustrates the information required. This detail will provide the field personnel with the necessary information to prevent welding in tension or reversal zones which can be detrimental to the fatigue life of the structure.

The fatigue requirements described elsewhere in *LRFD* Chapter 6 should be considered. They include the following:

1. fatigue due to out-of-plane flexing in web of plate girder, *LRFD* 6.10.5.3.
2. fatigue in shear connectors, *LRFD* 6.10.10.2 and 6.11.10; and
3. bolts subject to tensile fatigue, *LRFD* 6.13.2.10.3.

407-5.0 DIMENSIONING AND DETAILING REQUIREMENTS

407-5.01 Dead-Load Camber

Dead-load camber shall be designed in accordance with *LRFD* 6.7.2.

407-5.01(01) General

Steel beams or girders shall be cambered to compensate for the profile grade and offset the deflections due to applied dead loads. Camber shall be displayed in inches with a precision of two decimal places. Dead load should include the weight of the steel, and deck and railing, but not the future wearing surface. The effects of superelevation, where applicable, should also be considered. Unfactored force effects shall be used to determine the deflections.

407-5.01(02) Diagram

The plans should include a diagram and an optional table showing total camber due to the effects listed in Section 407-5.01(01). Figure 407-5A illustrates an example of the no-load camber and reaming diagram for bolted field splices and the table of cambers. Camber should be computed assuming the girder is lying on its side; i.e., not loaded. This information is required for fabrication. The detail should reference dimensions to the bottom edge of the web; i.e., assuming that flanges have not been attached.

The basic reference line should extend as a straight line from the two end supports along the centerline of the girder. At each support, a blocking dimension shall be provided from this reference line to the bottom of the web. This dimension is numerically equal to the offset of the profile grade from a straight line extending through the end bent stations along the profile-grade line. These are control dimensions for assembling the girder sections for reaming.

Within each span, another reference line shall be established extending between supports. Camber ordinates shall be referenced to this line. Camber is cut into the webs of plate girders using these dimensions. Camber ordinates are shown in inches at a minimum of the each span's tenth points and at each splice location.

407-5.02 Minimum Thickness of Steel

The thicknesses of steel elements shall be as described in *LRFD* 6.7.3, and should not be less than the following.

1. Plate girder webs, ½ in.
2. Plate-girder flange, 3/4 in., or 1 in. for horizontally-curved girders.
3. Rolled beam or channel webs, 1/4 in.
4. Stiffener plates, 3/8 in.
5. Connection plates, ½ in.
6. All other structural-steel elements, 5/16 in.

407-5.03 Diaphragms and Cross Frames

The use of diaphragms and cross-frames shall be considered as described in *LRFD* 6.7.4 and 6.6.1.3.1. Their purpose is to stabilize the beams during and after construction and to distribute gravitational, centrifugal, and wind loads.

407-5.03(01) General

1. Location. Diaphragms or cross-frames shall be placed at each support and throughout the span at an appropriate spacing. The location of the field splices should be planned to avoid conflict between the connection plates of the diaphragms or cross-frames and the splice material.

2. Spacing. The maximum spacing of diaphragms and cross-frames shall be based on an analysis as outlined in *LRFD* Article 6.7.4. Where integral or semi-integral end bents are used, the first interior diaphragm shall be placed within 10 ft of the centerline of bearing to provide beam stability prior to and during the deck pour.

3. Skew. All intermediate diaphragms and cross-frames shall be placed perpendicular to the beams or girders. For a skew of less than 20 deg, the intermediate diaphragms and cross-frames should be continuous and not staggered.

4. Ends. End diaphragms and cross-frames should be placed along the centerline of bearing. The top of the diaphragm shall be set below the top of the beam or girder to accommodate the joint and the thickened slab at the end of the superstructure deck, where applicable. The end diaphragms should be designed to support the edge of the slab including live load plus impact.

5. Curved Structure. Diaphragms or cross-frames connecting curved girders are considered primary members and should be oriented radially.

6. Design. *LRFD* refers to the AISC *Specification for Load and Resistance Factor Design of Single Angle Members*, included in its *Specification for Load and Resistance Factor Design Manual of Steel Construction*. Therefore, design of single angle members shall be in accordance with the AISC LRFD *Specifications*.

407-5.03(02) Diaphragm Details

For a span composed of rolled beams, diaphragms at continuous supports and at intermediate span points may be detailed as illustrated in Figure 407-5B. Figure 407-5C illustrates the typical end-diaphragm-connection details for rolled beams. Plate girders with web depths of 42 in. or less should have the same diaphragm details. For plate girders with webs deeper than 42 in., use cross-frames or K-frames as detailed on Figure 407-5D at continuous supports and at intermediate span points. Figure 407-5E and Figure 407-5F illustrates the typical end cross-frame or K-frame details.

Intermediate diaphragms should be designed and detailed as non-load bearing. Diaphragms at points of support should be designed as a jacking frame, if needed.

407-5.03(03) Cross-Frame Details

Figure 407-5D illustrates typical intermediate cross-frame details for plate-girder webs of more than 42-in. depth. The X-frame at the top of the figure is more cost effective than the K-frame at the bottom. However, the K-frame should be used instead of the X-frame where the girder spacing becomes much greater than the girder depth, for example, where the angle of the diaphragm is less than 30 deg, and the X becomes too shallow. A solid bent-plate diaphragm with a depth equal to ¾ the girder depth is an option for a plate girder of less than 48-in. depth.

The rolled angles that comprise the cross frames are of minimum sizes based upon the limiting slenderness ratios shown in *LRFD* 6.8.4 and 6.9.3.

Cross-frame transverse connection plates, where used, shall be welded to both the tension and compression flanges. The connection-plate welds to the flanges should be designed to transfer the cross frame forces into the flanges.

The width of the connection plates should be sized to use bar stock, and shall be not less than 5 in. Where the connection plate also acts as a transverse stiffener, it shall satisfy LRFD 6.10.11.1.

If the design permits, gusset plates shall be eliminated by means of bolting cross frame members directly to the stiffeners.

Figures 407-5G through 407-5 I illustrate the stiffener and connection plate details that can be used.

407-5.04 Jacking

Jacking shall be as described in LRFD 3.4.3. The plans shall show jack-point locations and design loads. The beam, girder, or jacking frame shall be capable of resisting 1.3 times the dead-load reactions at those points. A slender beam may require web stiffeners at the jacking point. Such stiffeners may be fastened to the girder if jacking is required. Jacking frames will not be required at the supports unless there is insufficient clearance between the bottom of beam and top of cap to place a jack. If insufficient clearance is provided for the jack, it shall be determined whether the jack can be supported by means of temporary falsework. If temporary falsework is not feasible, a jacking frame should be provided, or the cap widened and the bearings placed on pedestals to provide sufficient space for a jack to be placed under the beam. Other locations where jacking may be required are as follows:

1. at supports under the expansion joints where joint leakage can deteriorate the girder bearing areas; or

2. at large-displacement expansion bearings where deformation-induced fatigue is possible.

If a jacking frame is not provided, the cross-frame at the support shall be capable of transferring lateral wind forces to the bearings. For a continuous structure with integral or semi-integral end bents, providing jacking frames at interior supports should not be considered.

407-5.05 Lateral Bracing

Lateral bracing should be eliminated where practical. The measures which may eliminate lateral bracing for straight I-beams are reducing the cross-frame spacing and increasing the flange width.

LRFD 6.7.5 requires that the need for lateral bracing be investigated for all stages of assumed construction procedures. If the bracing is included in the structural model used to determine force effects, it should be designed for all applicable limit states.

LRFD 4.6.2.7 provides for alternatives relative to lateral wind distribution in a multi-beam bridge.

407-5.06 Heat-Curved Rolled Beam and Welded Plate Girder

These shall be designed in accordance with *LRFD* 6.7.7.

407-5.07 Shims

Shims shall be included and the minimum thickness shall be 1/8 in. The shim packs shall be 1/2 in. minimum in total thickness, with multiple shim plates in a pack.

407-6.0 I-SECTIONS IN FLEXURE

407-6.01 General

407-6.01(01) Negative Flexural Deck Reinforcement

LRFD 6.10.1.7 requires that, in the negative-moment region where the longitudinal tensile stress in the slab, due to factored construction loads or the Service II load combination, exceeds the factored modulus of rupture, the total cross-sectional area of the longitudinal steel should not be less than 1% of the total cross-sectional area of the deck slab excluding the 1/2-in. sacrificial wearing surface. However, sufficient negative-moment steel shall be provided for the applied loads.

407-6.01(02) Stiffness in Negative-Moment Areas

LRFD 6.10.1.5 permits assuming uncracked concrete in the negative-moment areas for member stiffness. This is used to obtain continuity moments due to live load, future wearing surface, and barrier weights placed on the composite section.

The transformed-section properties should be calculated based on three times the modular ratio for composite dead loads of railing, future wearing surface, utilities, etc., and one times the modular ratio for composite live loads.

For the Service Limit state control of permanent deflections described in *LRFD* 6.10.4.2 and the Fatigue Limit state described in LRFD Article 6.6.1.2, the concrete slab may be considered fully effective for both positive and negative moments for a member with shear connectors throughout its full length and satisfying LRFD 6.10.1.7.

407-6.02 Strength Limit State

Moment redistribution will be permitted for continuous spans of I-section members, if $F_y \leq 70$ ksi and if members satisfy the requirements of *LRFD* Appendix B6.2.

407-6.03 Service Limit State Control of Permanent Deformations

Moment redistribution as described in *LRFD* 6.10.4.2 and Appendix B6 is permitted for the investigation of permanent deformations.

407-6.04 Shear Connectors

Shear connectors shall be designed in accordance with LRFD 6.10.10. They shall consist of welded studs, with a preferred diameter of 7/8 in., and a minimum diameter of 3/4 in. The minimum height is 4 in. Shear connectors should have a minimum 2.5-in. concrete cover and should penetrate at least 2 in. above the bottom of deck slab. The stud length should be increased in 1-in. increments where necessary to maintain a 2-in. minimum penetration of the stud into the deck slab. The stud height may need to be modified at splice locations for minimum cover requirements. The minimum longitudinal shear connector pitch is six stud diameters. The maximum such pitch is 2 ft. See Figure 407-6A for additional information.

The minimum number of studs in a group is two in a single transverse row. The transverse spacing, center to center, of the studs should be not less than four stud diameters. The minimum clear distance between the edge of the beam flange and the edge of the nearest stud should be 1 in. Details and spacing of stud shear connectors shall be shown on the plans.

If the structure is skewed 5 deg or less, the rows of shear connectors shall be placed perpendicular to the centerline of the roadway. If the skew is greater than 5 deg but less than or equal to 25 deg, the rows of shear connectors shall be placed along the skew. If the skew is greater than 25 deg, the rows of shear connectors shall be placed perpendicular to the centerline of the roadway, which will be the same as that of the transverse reinforcing steel in the deck.

407-6.05 Stiffeners

407-6.05(01) Transverse Intermediate Stiffeners

A straight girder may be designed without intermediate transverse stiffeners, if economical, or with intermediate transverse stiffeners placed on one side of the web plate. Due to the labor intensity of welding stiffeners to the web, the unit cost of stiffeners by weight is approximately nine times that of the web. It is seldom economical to use the thinnest web plate permitted. Therefore, the use of a thicker web and fewer intermediate transverse stiffeners, or no intermediate stiffeners, should be investigated.

Intermediate transverse stiffeners should be welded near side and far side to the compression flange. A tight fit shall be used for the tension flange including stress-reversal areas. This exceeds the requirements of *LRFD* 6.10.11.1. See Figure 407-6B for details.

Transverse stiffeners, except at diaphragm or cross-frame connections, should be placed on only one side of the web. The width of the projecting stiffener element, moment of inertia of the

transverse stiffener, and stiffener area should be in accordance with *LRFD* 6.10.11.1.2 and 6.10.11.1.3.

Longitudinal stiffeners used in conjunction with transverse stiffeners on a longer span with deeper webs should be placed on the opposite side of the web from the transverse stiffener. Where this is not practical, e.g., at an intersection with cross-frame connection plates, the longitudinal stiffener should not be interrupted for the transverse stiffener.

407-6.05(02) Bearing Stiffeners

Bearing stiffeners are required at the bearing points of each rolled beam or plate girder. Bearing stiffeners at integral end bents may be designed for dead and construction loads only.

The bearing stiffeners shall be designed as columns. The stiffeners shall be extended to the outer edges of the bottom flange plate. *LRFD* 6.10.11.2 does not specify an effective column length for the design of bearing stiffeners. Because the reaction load applied at one end of the stiffener pair is resisted by forces distributed to the web instead of by a force concentrated at the opposite end, as in columns, it is not necessary to consider the stiffeners as an end-hinged column where the flanges are free to rotate. An effective column length of ¾ of the web depth shall be used.

The weld connecting the stiffener to the web should be designed to transmit the full bearing force from the stiffener to the web due to the factored loads.

The bearing stiffeners may be either milled to bear plus fillet welded against the flange through which they receive their reaction, or welded to the flange with full-penetration groove welds. See Figure 407-5G for details. All bearing stiffeners under full dead load shall be vertical to within applicable fabrication and construction tolerances.

407-6.06 Cover Plates

Cover plates will not be permitted for a new, rehabilitated, or widened bridge.

LRFD 6.10.12.1 requires that partial-length cover plates should not be used with flange plates whose thickness exceeds 3/4 in. in a non-redundant-load-path structure. According to *LRFD* 1.3.4, those elements and components whose failure is not expected to cause collapse of the bridge should be designated as not failure-critical, and the associated structural system as redundant. The thickness of a single cover plate should not exceed twice the thickness of the flange plate. Multiple cover plates should not be used. The width of the cover plate should be

different from that of the flange plate to allow for proper placement of the weld. The ends of partial-length cover plates should be terminated with a bolted connection according to *LRFD* 6.10.12.2.3.

407-6.07 Constructability

LRFD 6.10.3 and its commentary provide additional information regarding constructability of a steel I-girder bridge.

See Chapter 403 for additional guidance for construction loading.

407-7.0 BOX SECTIONS IN FLEXURE

407-7.01 General

LRFD 6.11 addresses most aspects of steel-box-girder design, fabrication, inspection, and maintenance. However, additional designing and detailing issues to be considered are described below and in the AASHTO/NSBA Steel Bridge Collaboration, Task Group 1.4, *Guidelines for Design Details*.

Due to the high torsional rigidity and resistance associated with a closed section, box girders are particularly suitable for a curved bridge in which torsional moments resulting from curvature can be high.

Steel box girders are economical only if their total number of webs is fewer than those in a comparable steel-plate-girder bridge. Box girders should have a constant trapezoidal or rectangular shape and should be rotated with the cross slope. The top of slab to top of web dimension shall be kept constant. See Figure 407-7A for preferred horizontal geometry. Departure from the shown geometry can result in difficulties in generating shop drawings. The profile-grade line and horizontal-control line locations shown in Figure 407-7A are for demonstration purposes only. The centerline-of-bearing offset shall be considered in detailing substructure elements.

407-7.02 Flanges

In addition to the requirements of *LRFD* 6.11.2.2, the top flanges for box girders should be in accordance with the requirements for plate girder flanges.

For the bottom flange, plate distortion during fabrication and erection can be a problem. If using a bottom tension flange plate of less than 1-in. thickness, a fabricator shall be contacted to determine whether practical stiffness needs are satisfied. A bottom tension flange should not have a thickness of less than ¾ in. The bottom tension flange should have a *b*/*t* ratio of 80 or less. The bottom flange's edges should extend at least 1½ in. beyond the web centerline to facilitate automated welding.

A wide box can have thin bottom flanges in the tension region resulting in a visible deflection in the transverse direction due to the weight of the plates. If the deflection affects the appearance of the bridge, it may be reduced to an acceptable limit by transversely stiffening the plate. If using longitudinal stiffeners, a clear distance shall be maintained between longitudinal stiffeners of not less than 24 in. to accommodate automated welding equipment. Therefore, the minimum flange width between webs is 48 in. if using one stiffener, or 72 in. if using two stiffeners. More than two stiffeners shall not be used per flange. If not using longitudinal stiffeners, the minimum width should be 48 in. to facilitate welding for the web-to-bottom-flange connection.

For straight girders, plates or bars shall be used instead of WT shapes for longitudinal stiffeners as long as they satisfy *LRFD* criteria. Plate and bar sections are less expensive and easier to splice than WT sections. For curved girders, WT sections shall be used. If WT sections are used, the ratio of depth to one-half the WT flange width should be greater than 1.5 to provide welding access. Termination of longitudinal stiffeners shall be at a bolted field splice so that fatigue is not a concern at the stiffener's end.

407-7.03 Webs

A minimum web depth of 60 in. should be used for the purposes of maintenance and inspection. Other *LRFD* 6.11.2.1 requirements for plate girders are applicable to box girders.

407-7.04 Stiffeners

Stiffeners shall be designed in accordance with *LRFD* 6.11.11. For stiffeners and connections plates for internal cross frames, an option to provide fabricators is shown in Figure 407-7B. Cutting stiffeners short of the bottom flange facilitates automated welding of the web to the bottom flange. After this welding is complete, the stiffener can then be attached to the bottom flange with an additional plate.

Complete-penetration groove welds shall not be specified to connect bearing stiffeners to bottom flanges. Weld-induced flange distortion is more of a problem with box-girder flanges than those for plate girders.

407-7.05 Top-Flange Horizontal Lateral Bracing

Lateral bracing shall be used in straight or curved box girders. The top lateral bracing should be designed to resist force effects caused by the dead-load torsional moments. The section shall be analyzed and designed as a closed section by using the deck slab as the top member in considering live load and superimposed dead loads. Stresses due to flexure and torsion should be combined in the design.

Lateral bracing shall be bolted directly to the top flange. Enough slab haunch shall be provided so that formwork does not interfere with the bracing. Shims or fill plates shall not be used between the lateral bracing and girder top flange which will increase eccentricity of the connection.

Single-laced lateral bracing is preferred over double-laced bracing. The angle between the girder flange and the bracing should be at least 35 deg. An angle closer to 45 deg is desirable.

407-7.06 External Diaphragms and Cross Frames between Piers

External diaphragms shall be designed in accordance with *LRFD* 6.7.4.3. Cross frames shall be designed in accordance with *LRFD* 6.7.5.3. External diaphragms or cross frames are used to control relative displacement and twist of girders during slab placement. Once the slab has sufficiently cured, they may be removed, which is done primarily for aesthetic reasons. If they are to remain in place, they should complement the overall structural aesthetics and should include fatigue-resistant features.

For curved box girders, external diaphragms or cross frames at the span quarter or third points is usually sufficient, so, adding more is unnecessary. With straight box girders, one external cross frame or diaphragm at mid-span should be sufficient. External diaphragms or cross frames shall be backed up with an internal diaphragm or cross frame.

407-7.07 Internal Diaphragms and Cross Frames Between Piers

Internal diaphragms and cross frames are used to control cross-section distortion. For curved box girders, an internal cross frame or diaphragm shall be placed at every other lateral-bracing point, which should result in a spacing of 14 to 18 ft. Horizontal struts, usually angle sections, shall be placed at the lateral brace point between internal cross frames to control horizontal bending of the flange during concrete placement. Like lateral bracing, they should be attached directly to the flanges.

For straight box girders, internal diaphragms or cross frames can be spaced at every third or fourth lateral-bracing point.

407-7.08 Pier Diaphragms and Cross Frames

Assuming one bearing per girder, diaphragms at a pier should be plate-girder sections that are approximately the same depth as the girders. They should connect to the box-girder flanges and web if their span-to-depth ratio is 3 or more. With two bearings, a cross frame is preferred at the pier. Bearing assemblies shall not interfere at the bottom-flange connection. Constructability of diaphragms shall be considered at the girder ends, as the presence of abutment backwalls or other girders can complicate bolting the diaphragms in place. An inspection-access hole shall be provided through the diaphragm web plate at the intermediate supports. See Section 407-7.11 for recommended opening sizes. See Figure 407-7C for a typical pier diaphragm between girders with one bearing per girder.

407-7.09 Field Splices

Field splices shall be bolted. The requirements for plate girders also apply. Overall girder width, including sweep, should be not more than 14 ft for ease of shipping.

407-7.10 Bearings

One bearing per girder is preferred. A girder may not bear evenly on both bearings or, on only one of the bearings with two bearing supports. This is true for skewed piers or curved spans. An uplift force can occur at one of the two bearings of an individual box, so a separate investigation should be made to determine if uplift does occur.

High-Load Multi-Rotational (HLMR) or pot bearings may be necessary. Neoprene elastomeric bearings are preferred over HLMR bearings. HLMR bearings shall be used for reactions of more than 1200 kip, or for a large-span curved bridge.

Bearings without anchor bolts, or with anchor bolts through masonry plates only, are preferred. Anchor bolts shall not pass through the girder's bottom flange. An external alignment device shall be used for restraint that is flexible in terms of placement after girder erection.

Bearings should be designed to accommodate bearing replacement with a minimal amount of lifting.

407-7.11 Electric Service and Inspection Access

Electric-service access should be provided in accordance with *LRFD* 6.11.1.4, on the insides of the girders, with outlets spaced at not more than 100 ft to facilitate maintenance and inspection during the life of the bridge. The long girder length between access holes or doors necessitates this requirement.

An access hole shall be provided with a lockable door or cover in the bottom flange near each end support for inspector access. The door or cover shall weigh 25 lb or less, to be usable by an inspector.

At the girder ends, in the bottom flange, a minimum 30-in. diameter access door shall be placed. In a pier diaphragm at an intermediate support, the minimum access-hole opening shall be 36 in. by 18 in. This opening shall desirably be 36 in. by 32 in. The holes shall be placed at mid-depth and concentric with the box. The opening corners should have a minimum radius of 6 in.

407-7.12 Constructability

Stay-in-place forms are used inside a steel box due to the difficulty of removing forms. Stay-in-place forms, however, have a limiting span length which can be exceeded in a wide box. For this situation, the plans should provide for an intermediate support. The intermediate support is at the option of the contractor and need not be detailed. However, an optional diaphragm to carry the reaction of the intermediate-form support should be designed and shown on the plans.

See Chapter 403 for additional guidance on construction-loading criteria.

407-8.0 CONNECTIONS AND SPLICES

407-8.01 Bolted Connections

Bolted connections shall be designed in accordance with *LRFD* 6.13.12. The following also applies.

1. Type. High-strength bolts shall be used. See *LRFD* 6.4.3. For unpainted weathering steel, ASTM A 325 Type 3 bolts should be used. For other than weathering steel, A 325 Type 1 bolts should be used. For a large or curved-girder structure, A 490 bolts shall be used.

2. Design. A bolted connection should be designed as slip-critical at the Service II Limit state and for construction loading, except for secondary bracing members.

3. Slip Resistance. *LRFD* Table 6.13.2.8-3 provides values for the surface condition. Class B surface condition shall be used for the design of a slip-critical connection.

407-8.02 Welded Connections

LRFD 6.13.3 specifies fatigue and welding requirements. The *AASHTO/AWS D1.5/D1.5 Bridge Welding Code* specifies requirements for welded connections. Welding symbols shall be as specified in *AWS Publication A2.4*.

The following requirements apply to welding.

1. Accessibility. Accessibility shall be provided to welded joints. Sufficient clearance shall be provided to enable a welding rod to be placed at the joint. An isometric drawing of the joint can reveal difficulties in welding or indicate where critical weld stresses shall be investigated.

2. Minimum Fillet Weld. The weld should be designed economically, but its size should not be less than 1/4 in., and not less than that shown in *LRFD* 6.13.3.4 for the thicker of the two parts joined.

3. Field Welding. Field welding is prohibited for all splices.

4. Intersecting Welds. These should be avoided. There should be a gap equal to four times the web thickness, $4t_w$, or 2 in., whichever is larger, between vertical and horizontal welds.

   A bridge that includes intersecting vertical and horizontal welds or that has gaps of less than $4t_w$ or 2 in. is prone to fatigue cracks.

5. Intermittent Fillet Welds. These are prohibited.

6. Partial-Penetration Groove Welds. These are prohibited except as permitted in *LRFD* 9.8.3.7.2.

407-8.03 Splices

In addition to the requirements of *LRFD* 6.13.6, the following will apply.

1. Location. Field splices should be located at low-stress areas and near the points of dead-load contraflexure for continuous spans. Numerous butt welds or butt welds located in high-stress regions are not desirable. The location of shop butt splices is normally dependent upon the length of plate available to the fabricator. This length varies depending upon the rolling process. The maximum length of normalized and quenched and tempered plates is 50 ft. Other plates can be obtained in lengths of greater than 80 ft depending on thickness. Shop availability should be verified for lengths and thicknesses of plate material. The cost of adding a shop-welded splice instead of extending a thicker plate should be considered in designing members. Discussion with a fabricator or the NSBA during the design is recommended.

2. Field Splices. For a girder longer than 100 ft, additional field splices may need to be shown on the plans.

3. Swept Width. For a curved girder, the swept width between splices should be limited to 10 ft to accommodate the shipment of the steel.

4. Bolts. Bolt loads should be calculated by means of an elastic analysis method. Not less than two lines of bolts shall be provided on each side of the joint for both the web and flange splice.

5. Composite Girder. If a composite girder is spliced at a section where the moment can be resisted without composite action, the splice may be designed as noncomposite. If

composite action is necessary to resist the loads, the splice should be designed for the forces due to composite action.

6. Top-of-Field-Splice Elevations. A table showing the erection elevation of the top-flange splice plate should be provided for all field splices. This elevation is determined by the following:

   (Top of slab elevation immediately above centerline splice) – (distance from top of slab to top of splice plate) + (concrete and superimposed dead-load deflection at the splice).

   The table will allow the erector to properly position the girder sections at the time of erection to maintain the vertical alignment.

7. Design. A bolted splice shall be slip-critical under Service II and construction loads and shall be designed in accordance with *LRFD* 6.13.2.2 for the Strength Limit state.

8. Welded Splice. Figure 407-1C illustrates welded-splice details. See *LRFD* 6.13.6.2 for more information regarding splicing different widths of material using butt welds.

407-9.0 TRUSSES AND ARCHES

A truss shall be designed in accordance with *LRFD* 6.14.2. A solid-web arch shall be designed in accordance with *LRFD* 6.14.4.

< 1 in.	≥ 1 in.
3/16	1 1/8
1/4	1 1/4
5/16	1 3/8
3/8	1 1/2
7/16	1 5/8
1/2	1 3/4
9/16	1 7/8
5/8	2
11/16	2 1/8
3/4	2 1/4
13/16	2 3/8
7/8	2 1/2
1	---

Notes:

1. *For thickness of < 1 in., use 1/16-in. increments.*
2. *For thickness of ≥ 1 in., use 1/8-in. increments.*
3. *Based on ANSI Standard B32.3. Mills can produce a plate size upon request.*

PLATE THICKNESSES

Figure 407-1A

Back

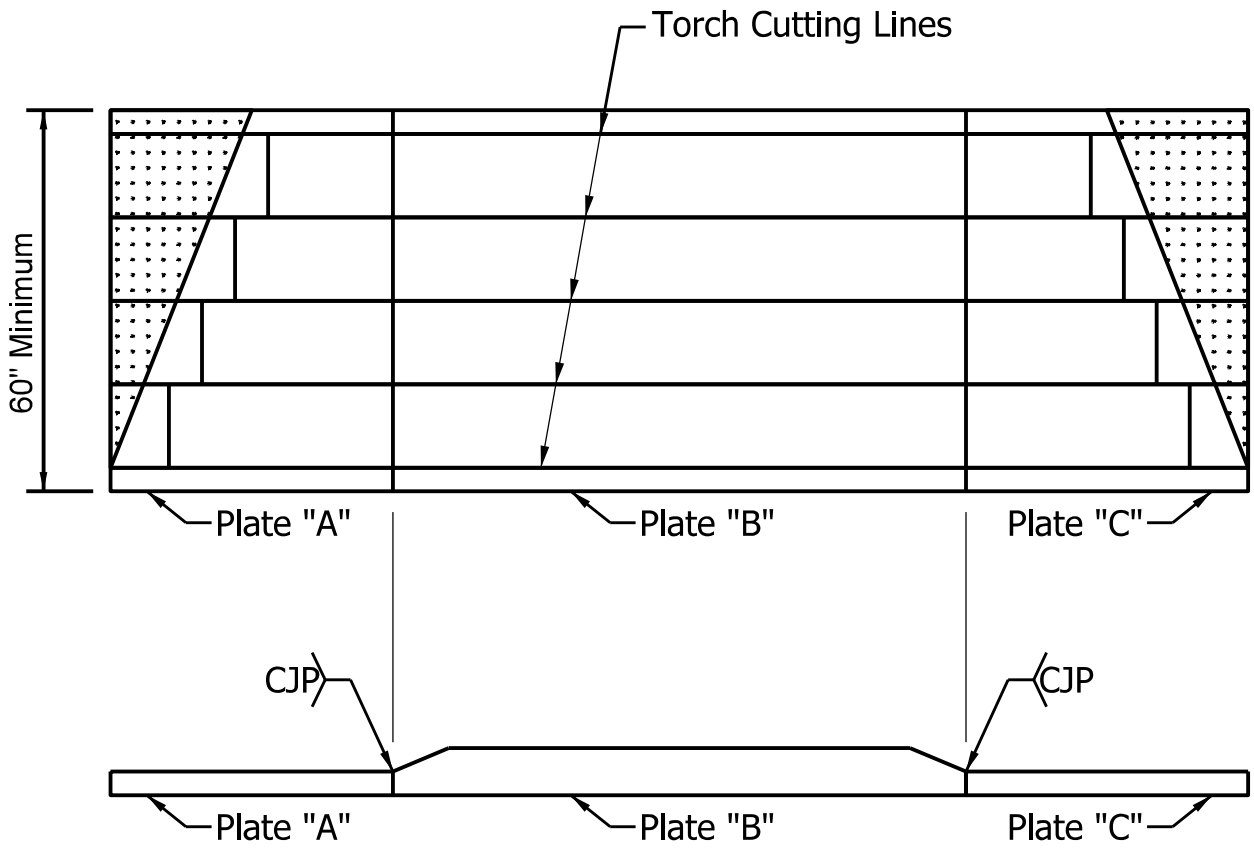

FLANGE GROUPING FOR FABRICATION

Figure 407-1B

Back

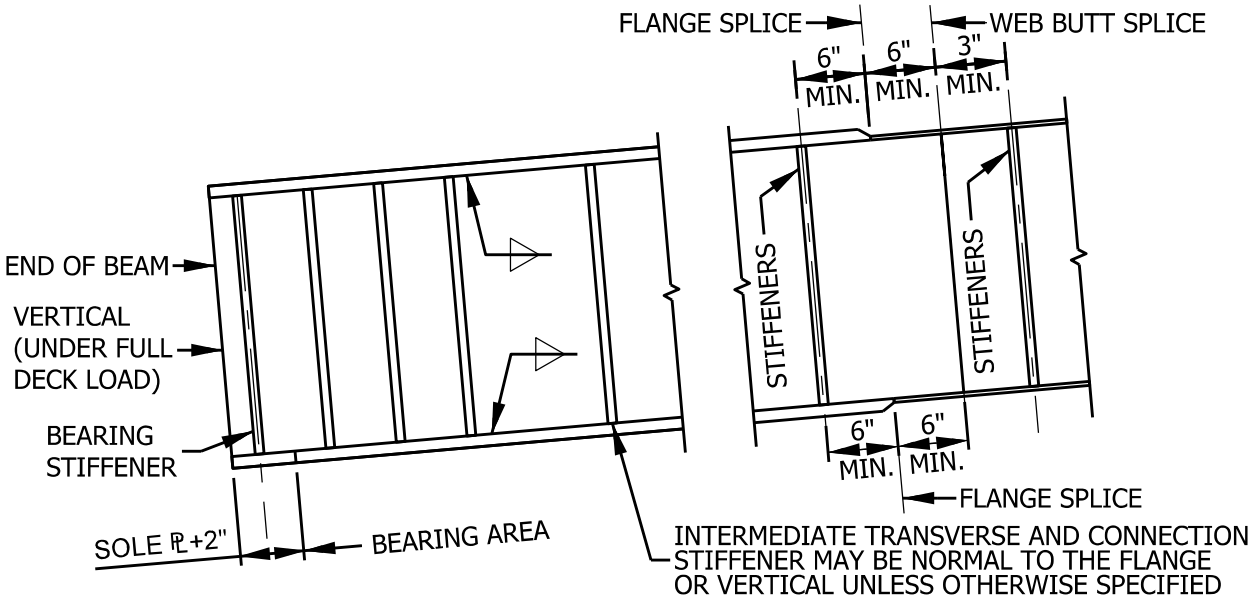

TYPICAL GIRDER DETAIL

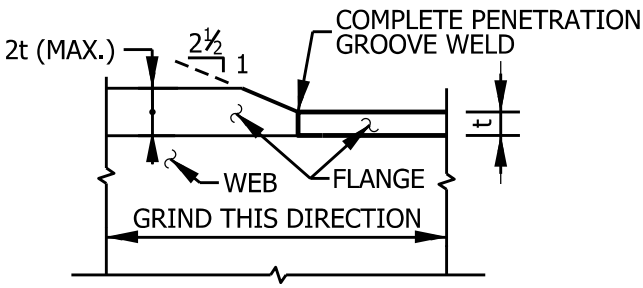

ELEVATION
FLANGE SPLICE DETAILS

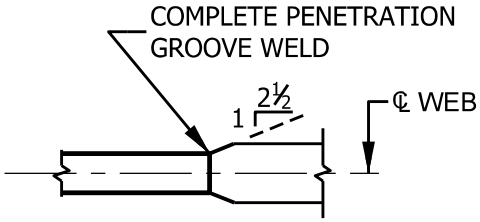

WEB THICKNESS TRANSITION

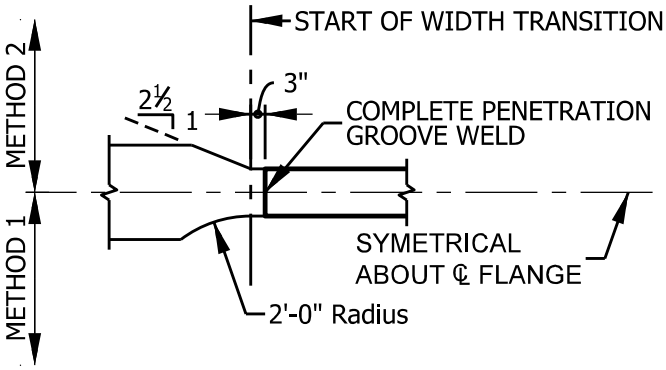

FLANGE WIDTH TRANSITION
(MUST USE RADIUS FOR STEEL STRENGTHS ≥ 70KSI)

GIRDER WELD SPLICE DETAILS

Figure 407-1C

Back

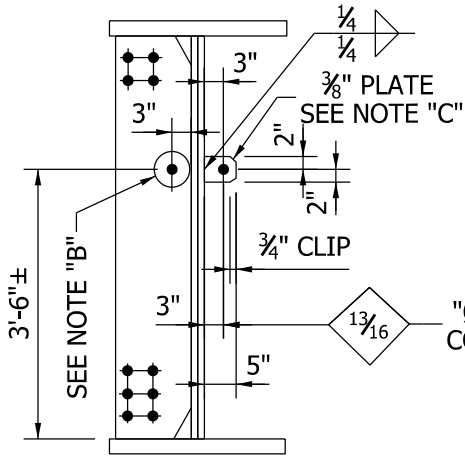

SECTION

NOTE "A":
USE CLIP ANGLE BETWEEN STIFFENERS.
8'-6" IS MAXIMUM SUPPORT SPACING.

NOTE "B":
HOLE SIZE IN CONN. STIFFENERS MAT BE THE SAME AS OTHER HOLES IN THE STIFFENERS (MIN. 13/16"Ø)

NOTE "C":
USE SUPPORT BETWEEN STIFFENERS.
8'-6" IS MAXIMUM SUPPORT SPACING.

"Ø HOLES FOR ⅝" PLAIN BARS. BARS TO BE MADE CONTINUOUS THROUGH USE OF WELDED SPLICES.

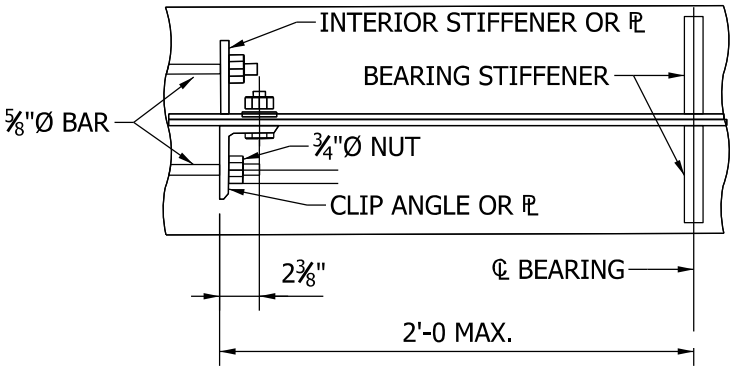

PLAN AT END BEARING

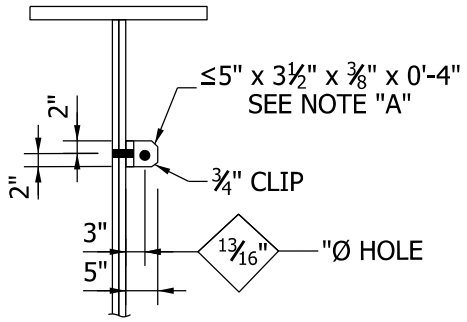

ALTERNATE BOLTED CONN.

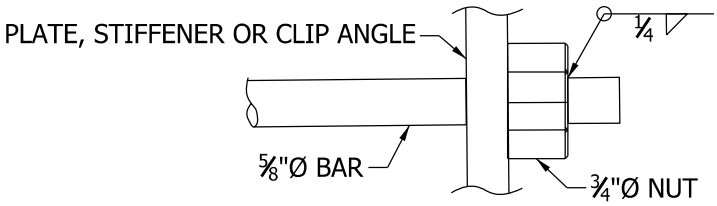

END CONNECTION DETAIL

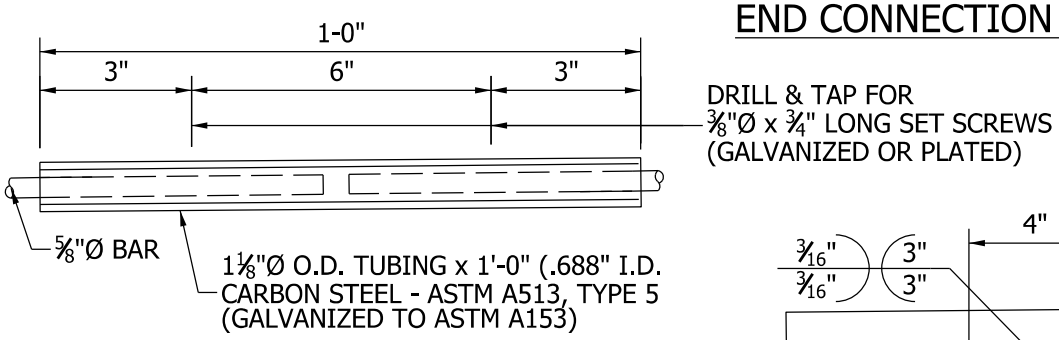

BOLTED SPLICE DETAIL AT MAIN MEMBER FIELD SPLICE

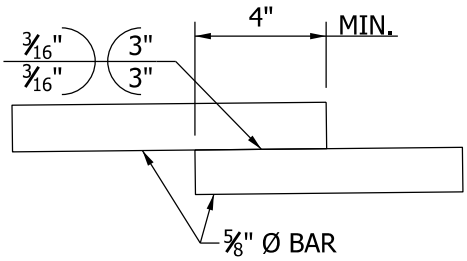

SHOP OR FIELD WELDED SPLICE DETAIL

SAFETY HANDRAIL DETAILS

Figure 407-1D

Back

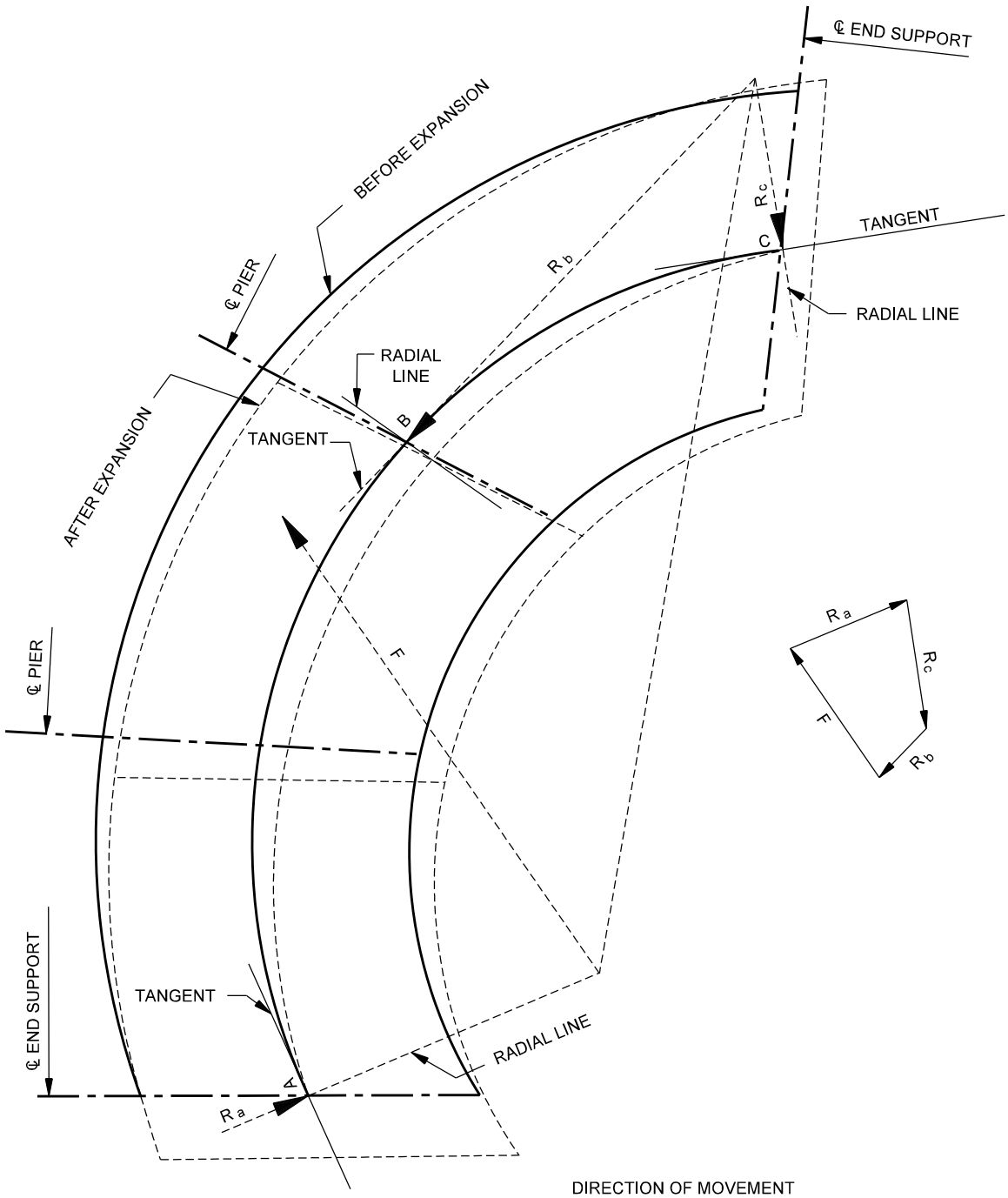

DIRECTION OF MOVEMENT

BEARINGS	LINEAL IN HORIZ. PLANE	ANGULAR IN VERT. PLANE	MOVEMENTS ARRESTED
A & C & ALL OTHERS	TANGENTIAL RADIAL ANY	TANGENTIAL TANGENTIAL ANY	RADIALLY TANGENTIALLY ———

BEARING RESTRAINTS

Figure 407-1E

Back

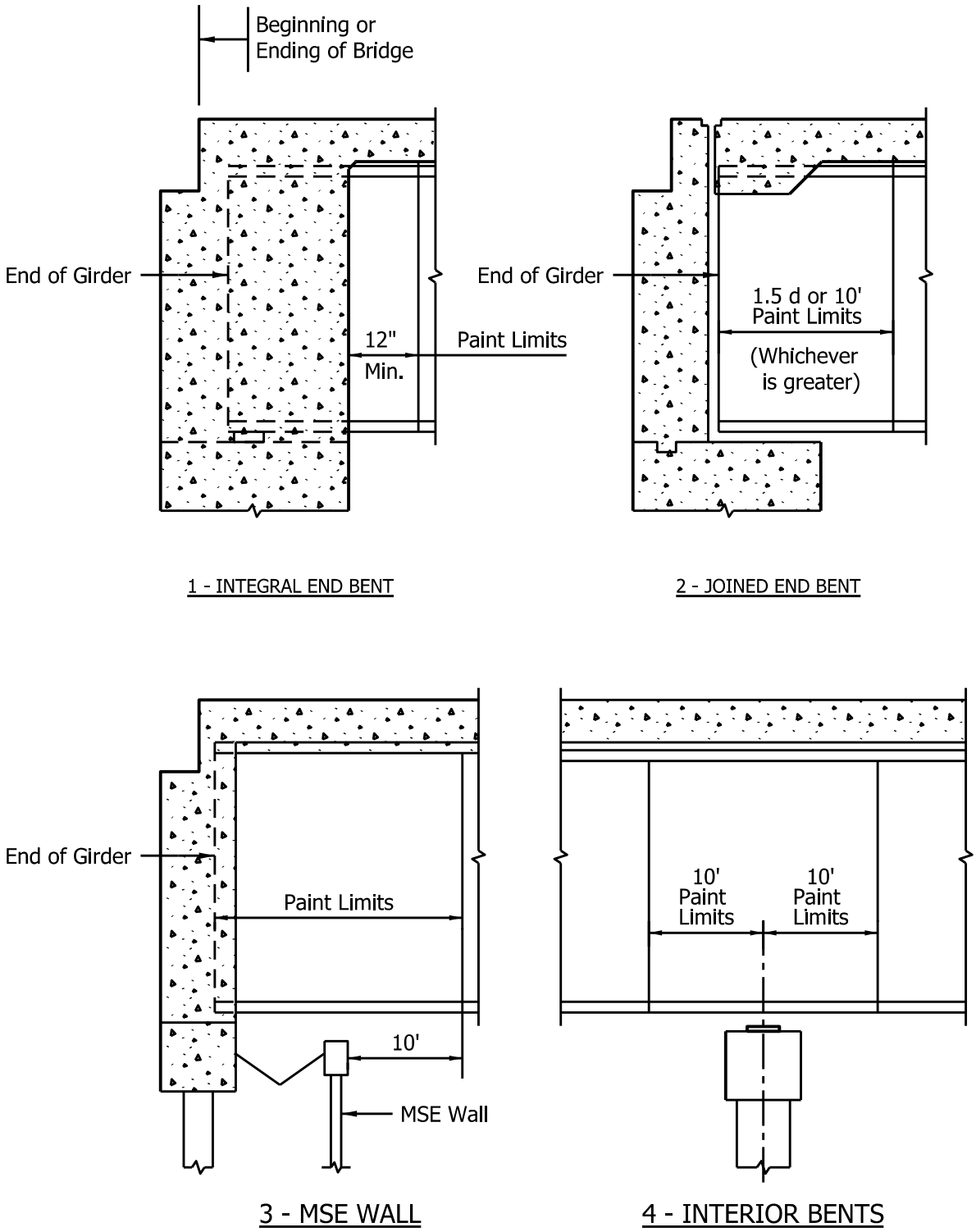

WEATHERING STEEL (PAINT LIMITS)

Figure 407-2A

Back

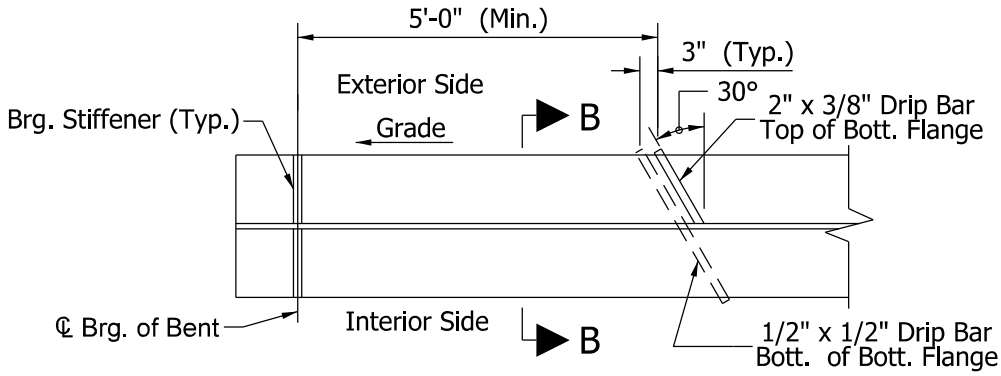

TYPICAL DRIP BAR DETAIL (END BENT)

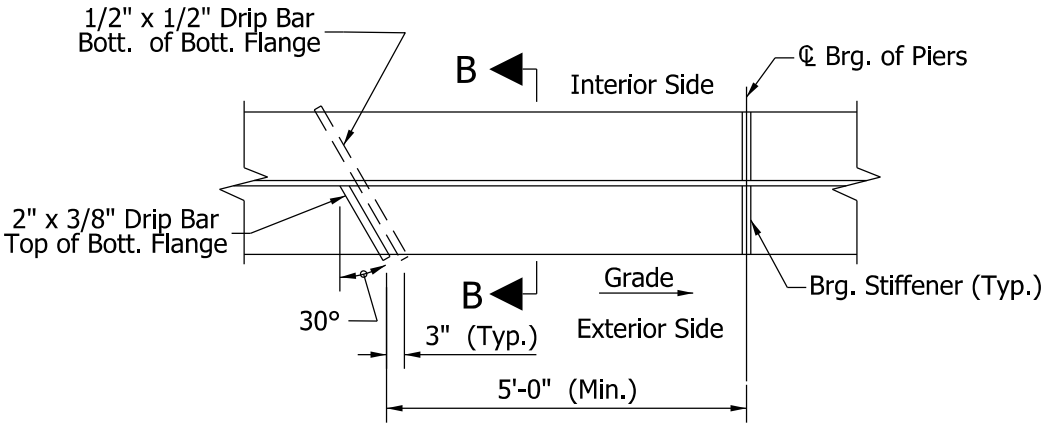

TYPICAL DRIP BAR DETAIL (PIER)

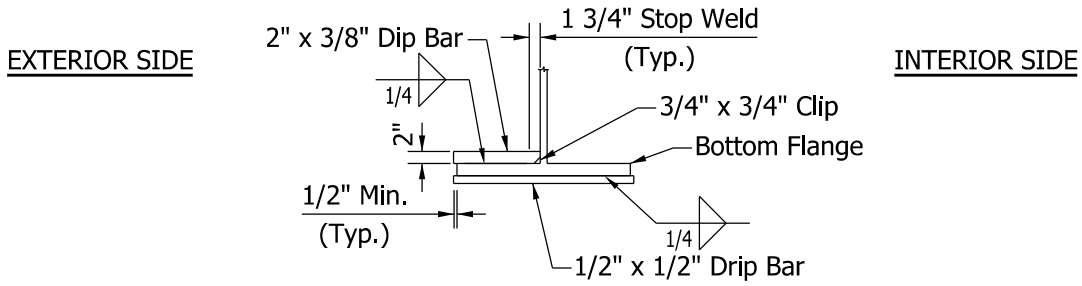

SECTION B-B

Note: Drip Bars shall be located on the upward slope of all exterior girders adjacent to End Bent or Piers.

Drip Bars shall be caulked with dark brown caulking against flange, web and fillet welds.

DRIP BAR DETAILS
Figure 407-2B

Back

Facility	Annual Growth Rate
Rural or Urban Freeway	3.07 %
Divided Rural Non-Freeway	1.51 %
Divided Urban Non-Freeway	1.32 %
Undivided Rural Arterial	1.51 %
Rural Collector or Local Road	2.45 %
Undivided Urban Facility	1.32 %

ANNUAL TRAFFIC GROWTH RATE

Figure 407-4A

Back

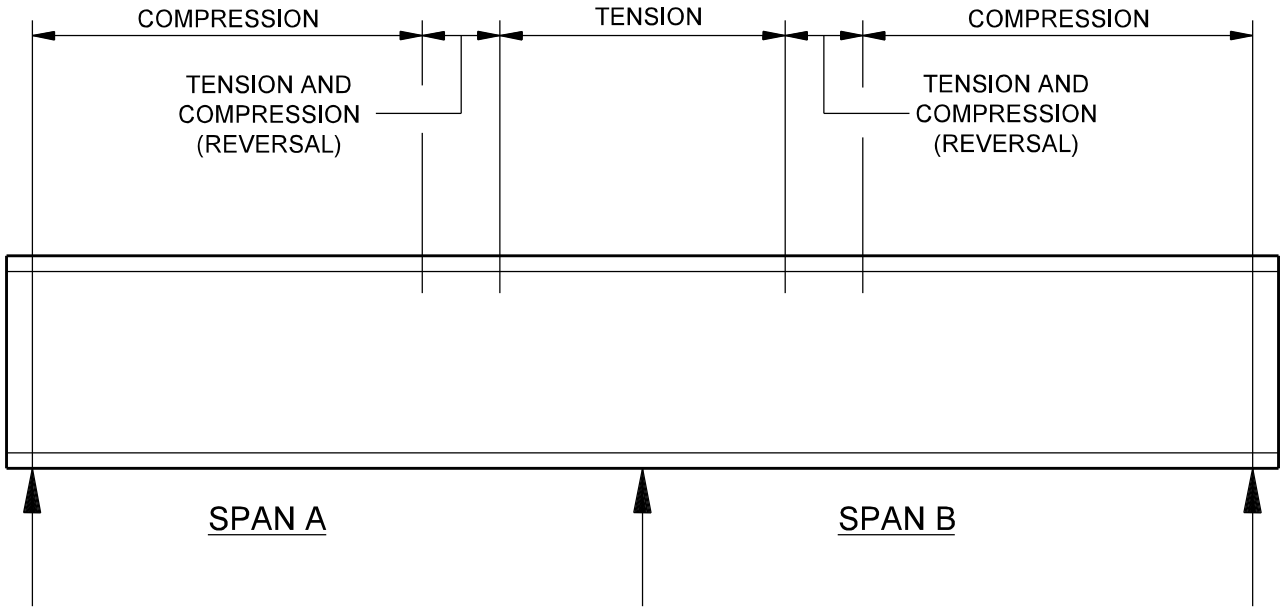

NOTE: LENGTH OF COMPRESSION, TENSION AND REVERSAL LIMITS TO BE SHOWN TO NEAREST INCH.

SCHEMATIC OF TOP FLANGE STRESS

Figure 407-4B

Back

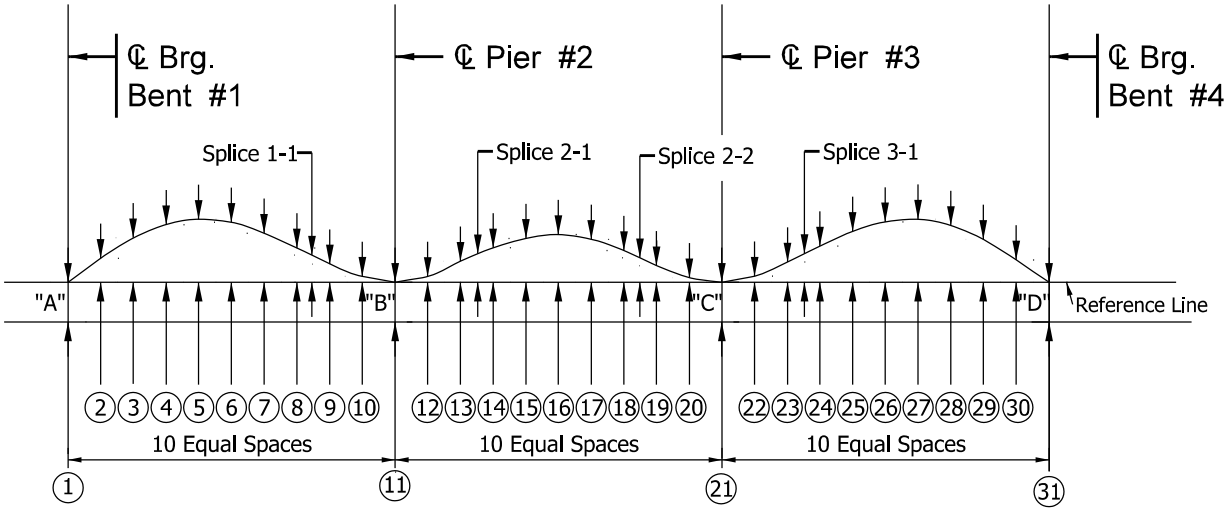

NO LOAD CAMBER AND REAMING DIAGRAM

(SKETCH SHOWN FOR CREST VERTICAL CURVE)

TABLE OF CAMBERS (in) EACH SPAN												
LOCATION	1	2	3	4	5	6	7	8	Splice	9	10	11
Dead Load - Steel												
Dead Load - Slab and Forms												
Dead Load - Railing												
Subtotal - Dead Load												
Geometric Camber												
Total Camber												

BLOCKING DIMENSIONS (in)				
LOCATION	A	B	C	D
Girder Line #				

BEAM CAMBER & BLOCKING DETAILS

Figure 407-5A

Back

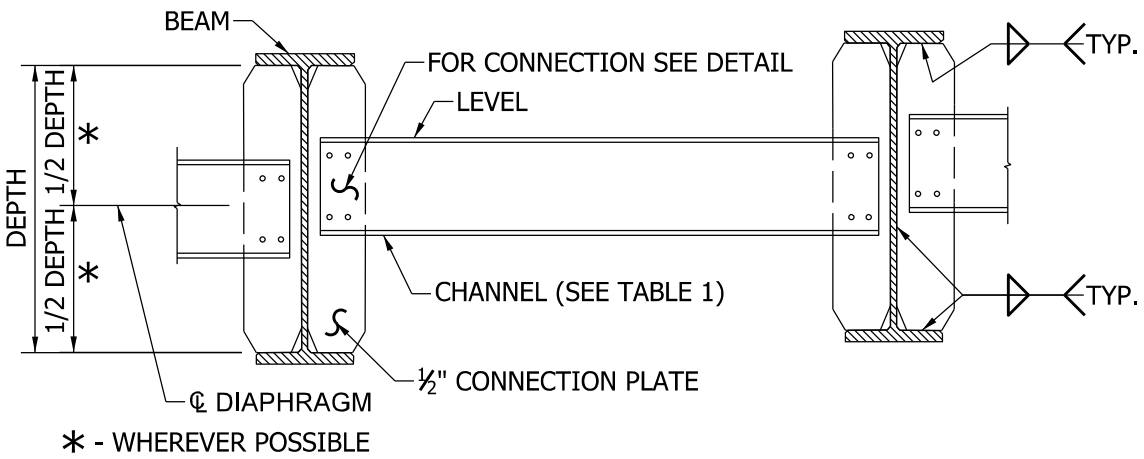

INTERMEDIATE DIAPHRAGM FOR ROLLED SECTIONS

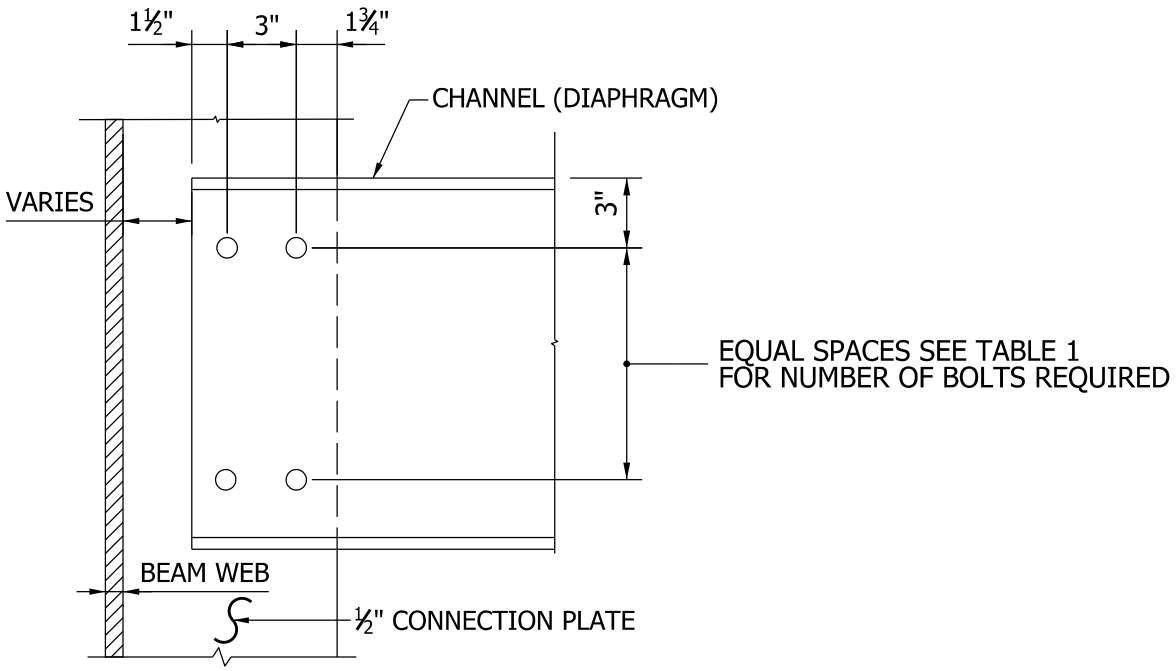

CONNECTION DETAIL

Note: All member sizes shown are minimum.
Designer shall verify actual sizes by design.

TABLE 1

STRINGER SIZE	DIAPHRAGM SIZE	NO. OF BOLTS
≥ 27" DEPTH	C 15 x 33.9	8
UP TO 24" DEPTH	C 12 x 25	6

ROLLED BEAM INTERMEDIATE DIAPHRAGM DETAILS

Figure 407-5B

Back

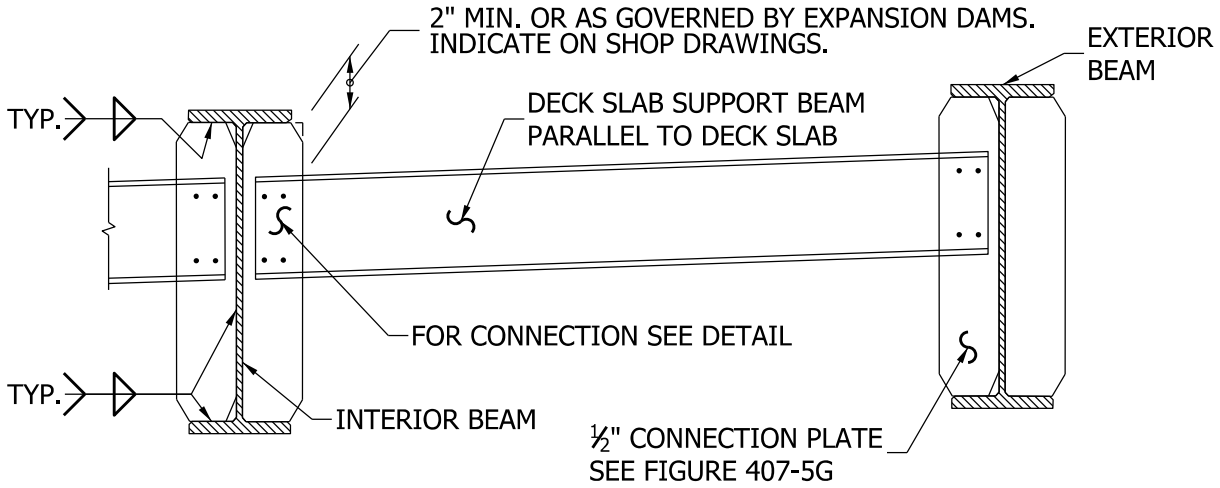

END DIAPHRAGM FOR ROLLED SECTIONS

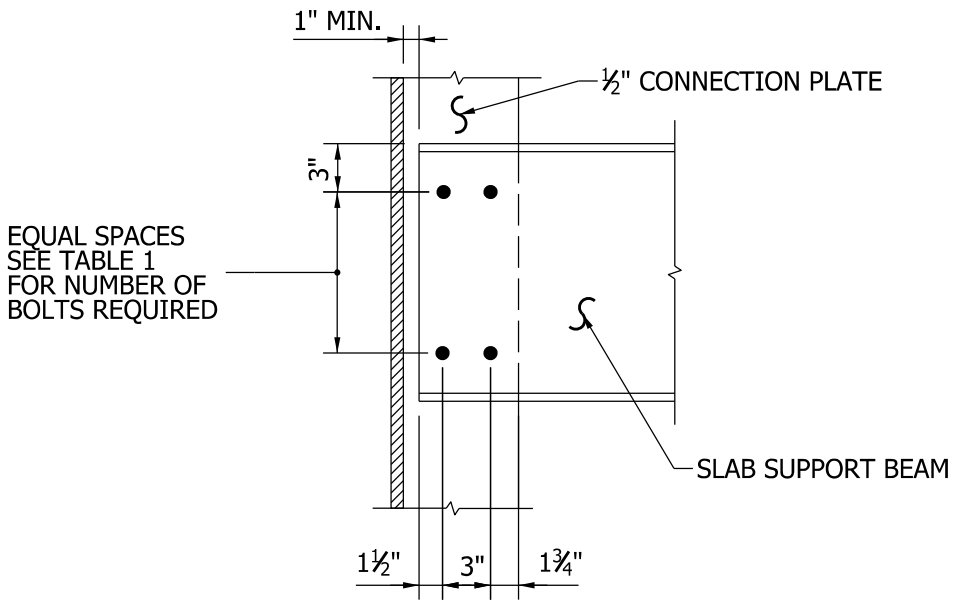

END DIAPHRAGM CONNECTION DETAIL

TABLE 1

BEAM SIZE	DIAPHRAGM SIZE	NO. OF BOLTS
≥ 27" DEPTH	C 15 x 33.9	8
UP TO 24" DEPTH	C 12 x 25	6

Note: All member sizes shown are minimum.
Designer shall verify actual sizes by design.

ROLLED BEAM END DIAPHRAGM DETAILS

Figure 407-5C

Back

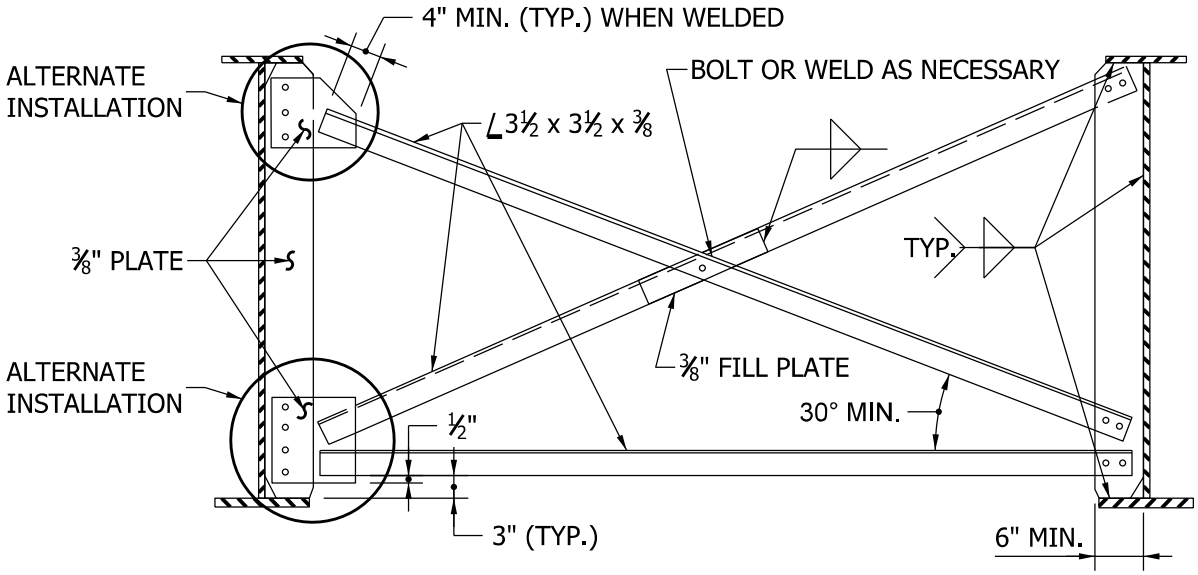

INTERMEDIATE DIAPHRAGM DETAIL

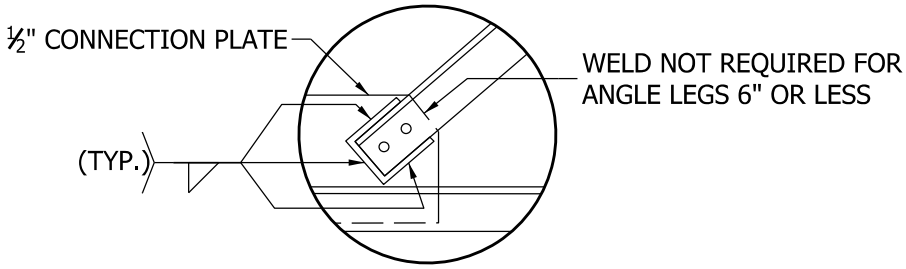

DETAIL E

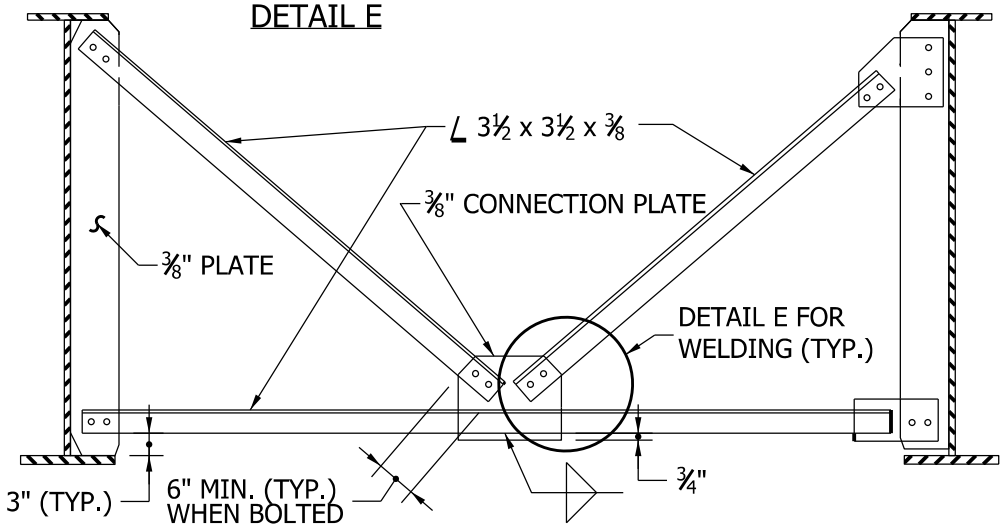

ALTERNATE INTERMEDIATE DIAPHRAGM DETAIL

Note: All member sizes shown are minimum.
Designer shall verify actual sizes by design.

TYPICAL INTERMEDIATE CROSS FRAME DETAILS
Figure 407-5D

Back

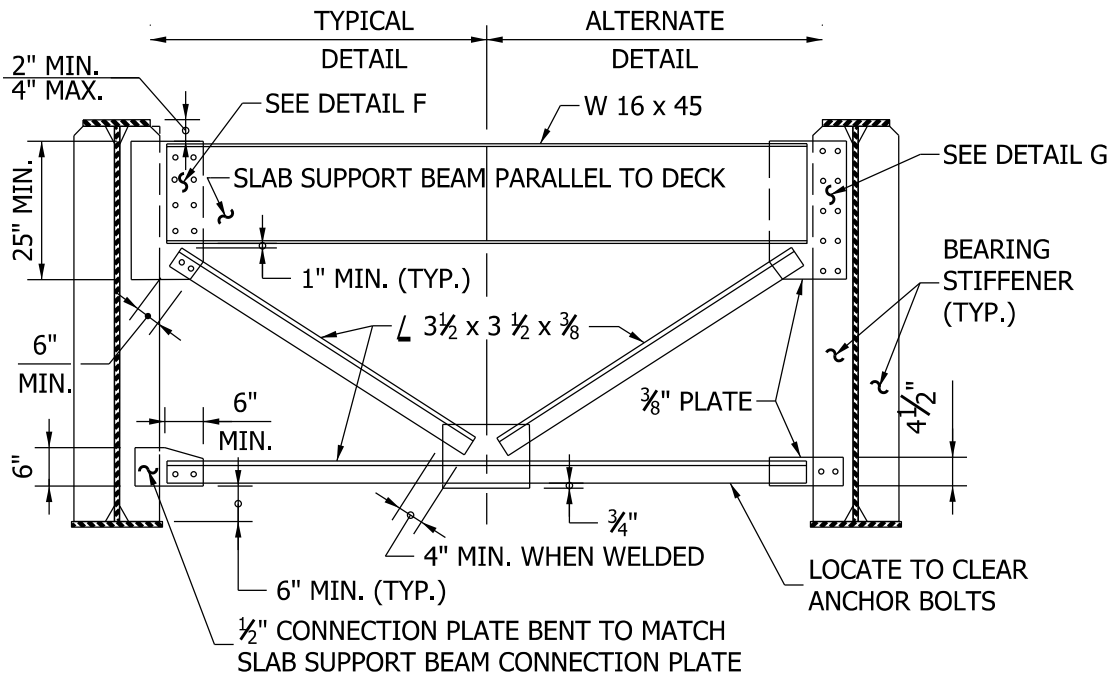

END DIAPHRAGM DETAIL

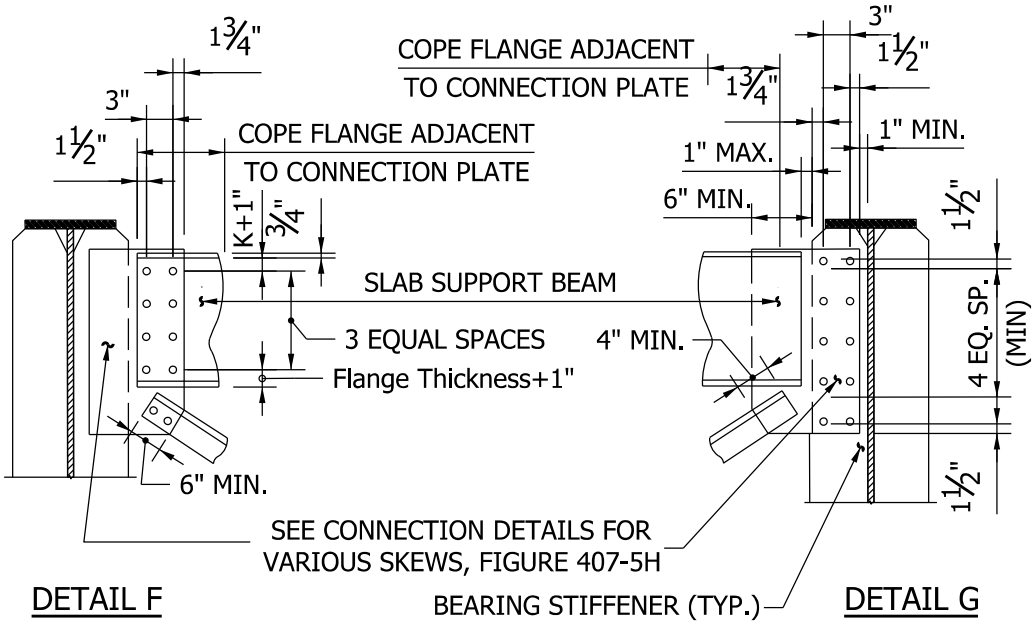

Note: All member sizes shown are minimum.
Designer shall verify actual sizes by design.

TYPICAL END CROSS FRAME DETAILS

Figure 407-5E

Back

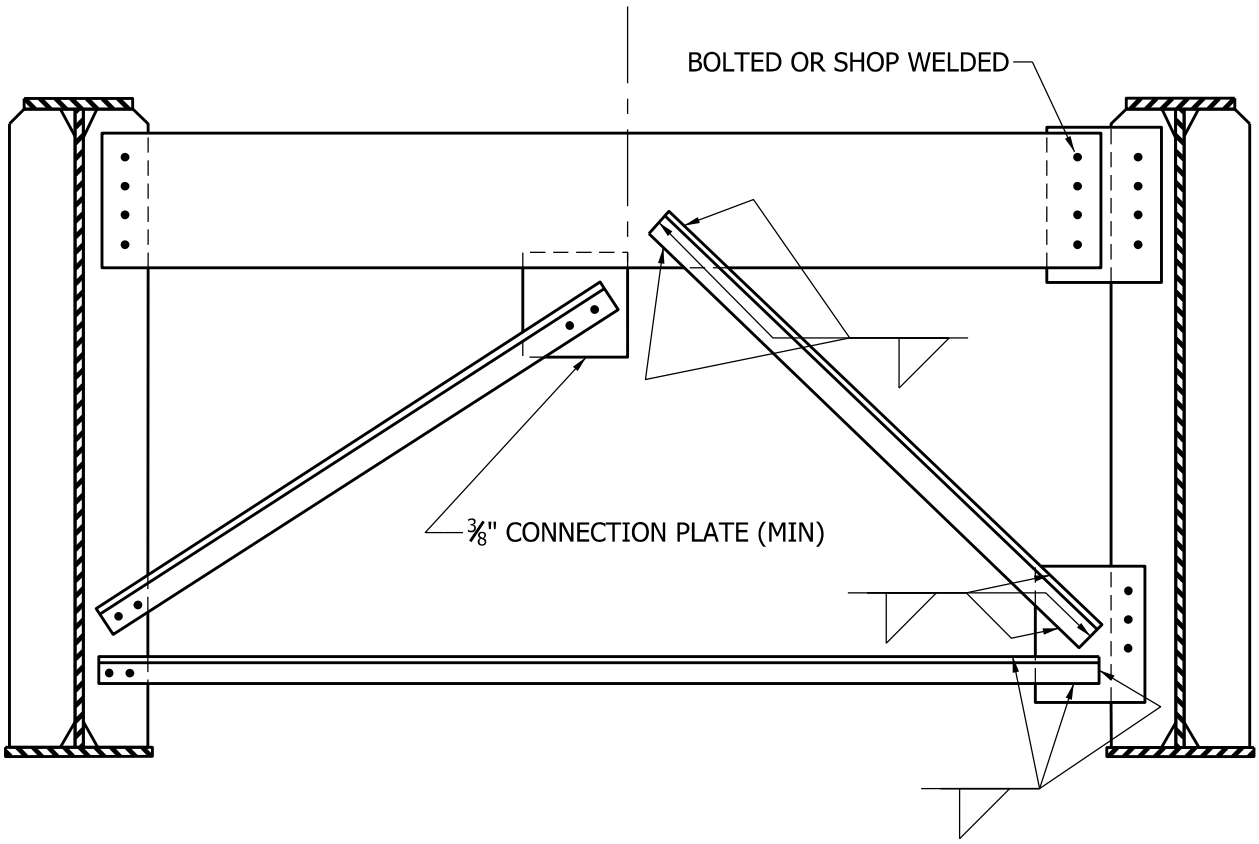

ALTERNATE END CROSS FRAME DETAILS

Figure 407-5F

Back

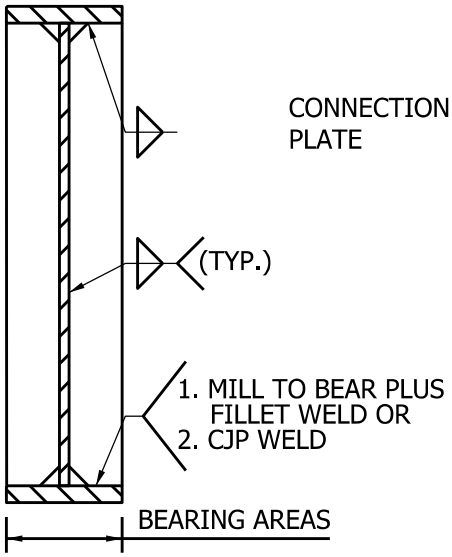

BEARING STIFFENER

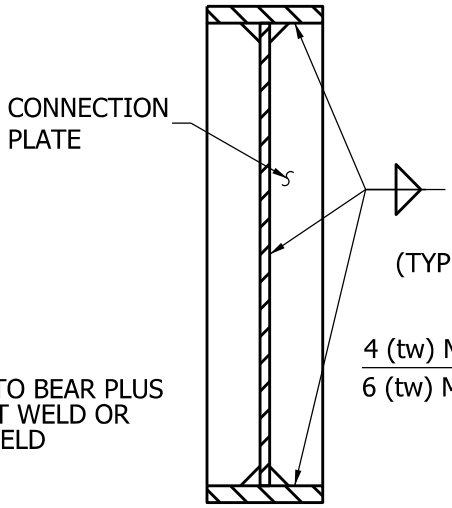

CONNECTION PLATE

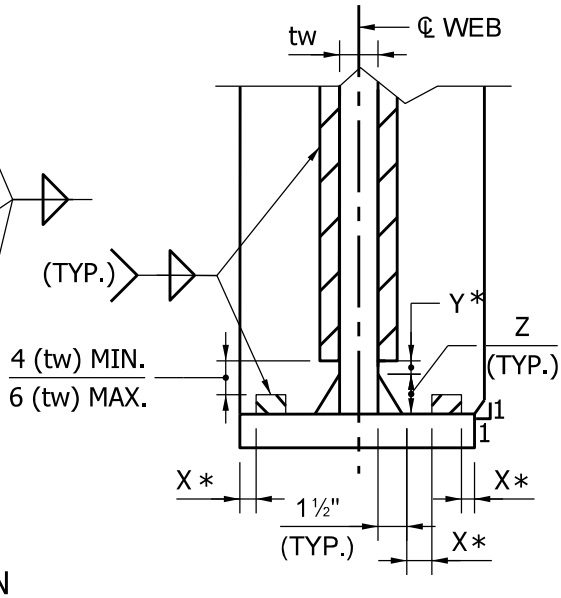

DETAIL @ END OF STIFFENER OR CONNECTION PLATE

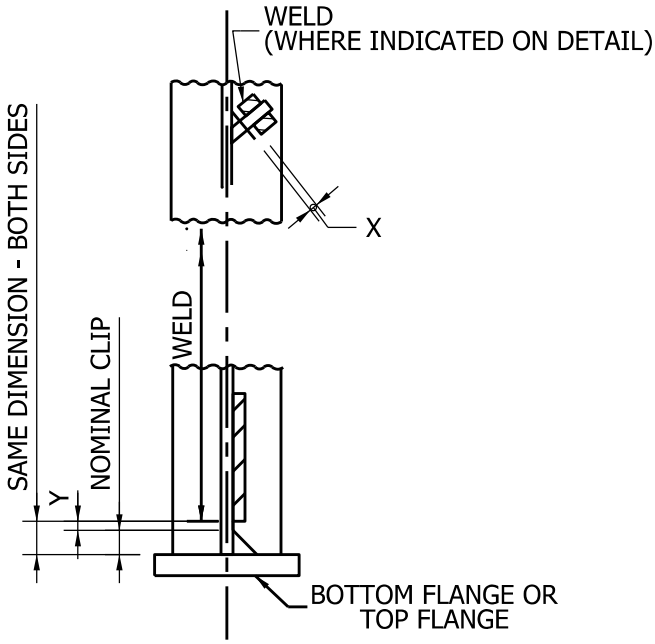

STIFFENER WELDING DETAIL
(FOR SKEWED STIFFENERS)

SHOW STIFFENER PLATE AND FILLET WELD SIZE ON THE PLAN

X = 1/4" ± 1/8"
Y = 1/2" ± 1/4"
Z = { 2 1/2" FOR 1/2" WEB
3" FOR 9/16" WEB
3 1/2" FOR 5/8" WEB
4" FOR 3/4" WEB }

* = 0" FOR GROOVE WELD

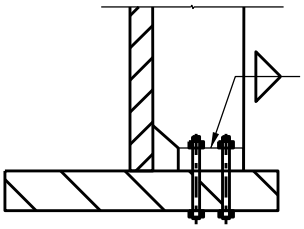

ALTERNATE DETAIL @ TENSION FLANGE
WHERE STRESS RANGE EXCEEDS CATEGORY C

Note: All member sizes shown are minimum.
Designer shall verify actual sizes by design.

STIFFENER AND CONNECTION PLATE DETAILS
Figure 407-5G

Back

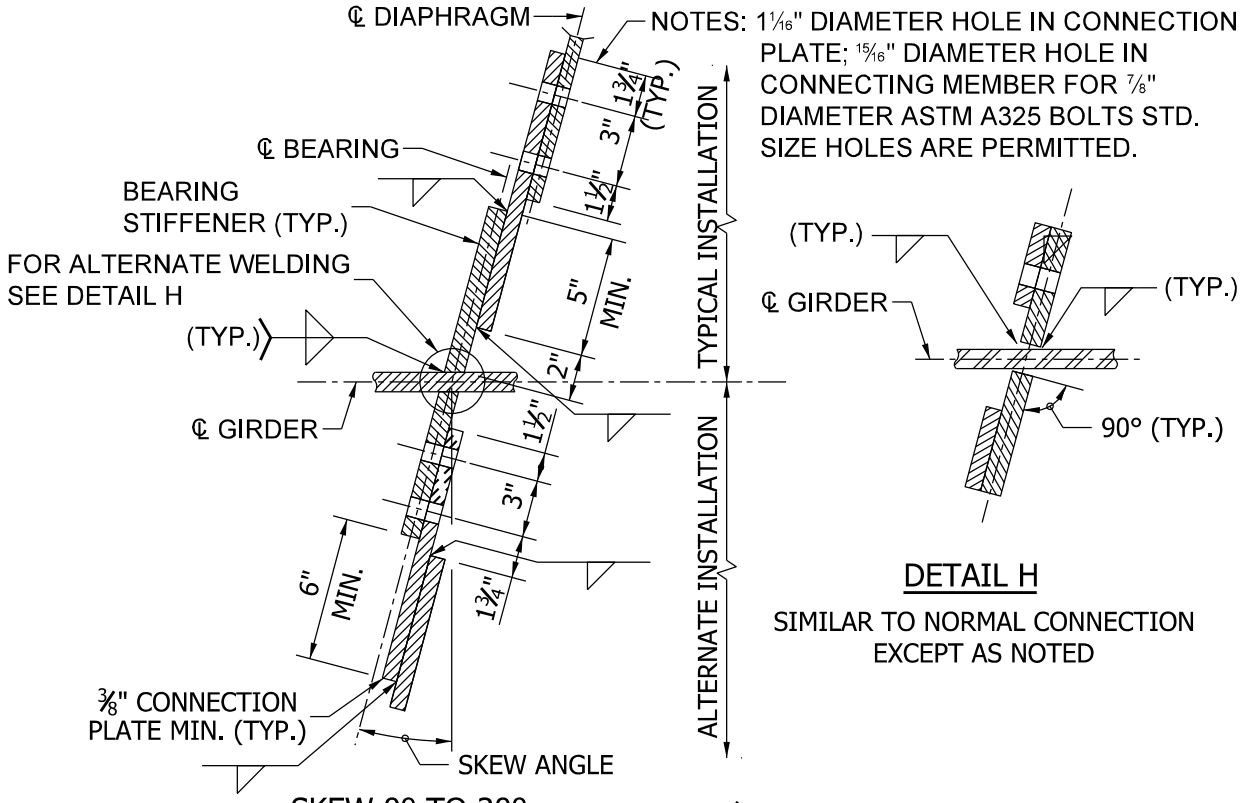

SKEW 0° TO 20°

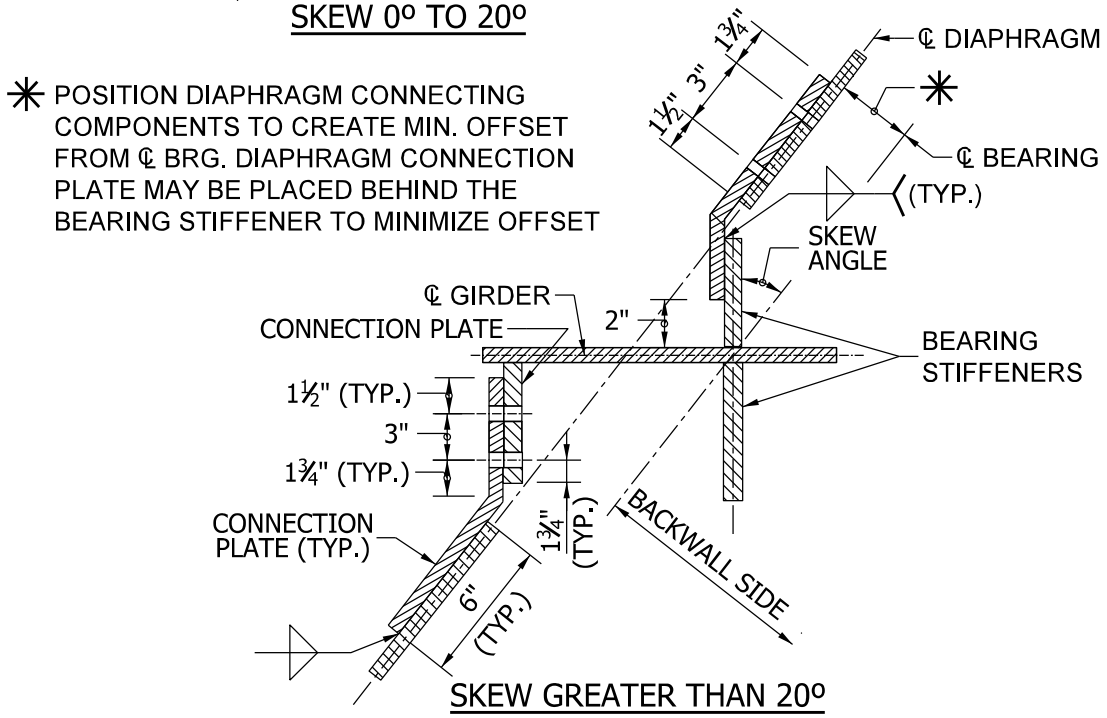

SKEW GREATER THAN 20°

Note: All member sizes shown are minimum.
Designer shall verify actual sizes by design.

CONNECTION PLATE DETAILS

Figure 407-5H

Back

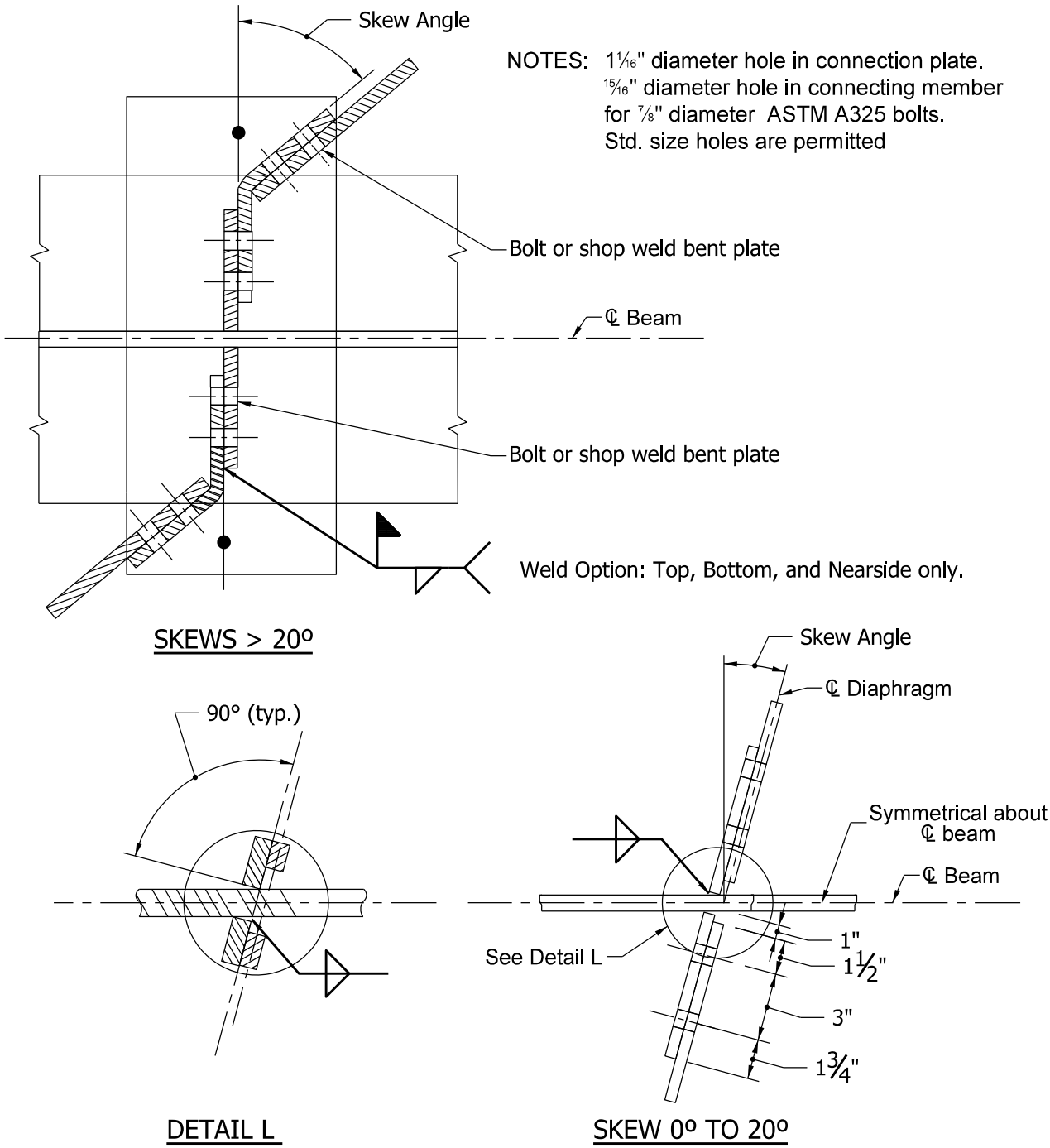

CONNECTION PLATE DETAILS

NOTE: All member sizes shown are minimum.
Designer shall verify actual sizes by design.

CONNECTION PLATE DETAILS

Figure 407-5 I

Back

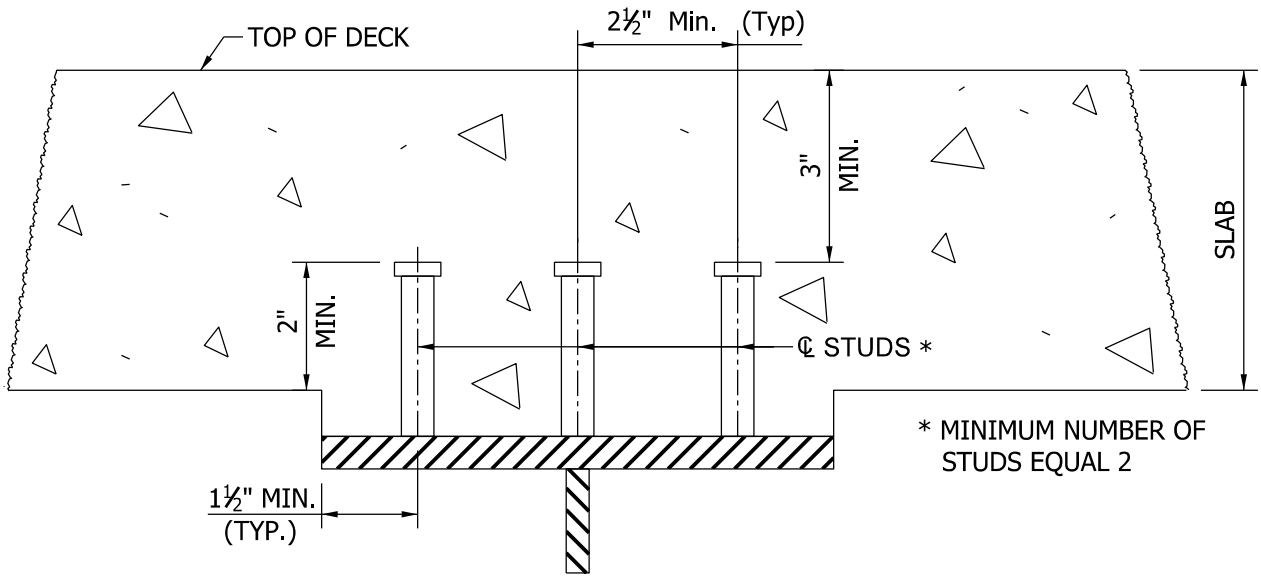

SHEAR CONNECTOR DETAIL

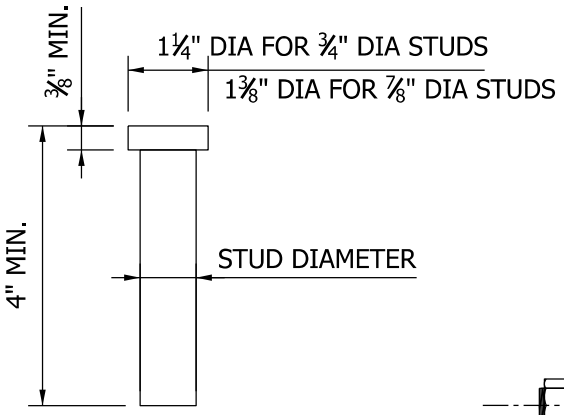

STUD DETAIL

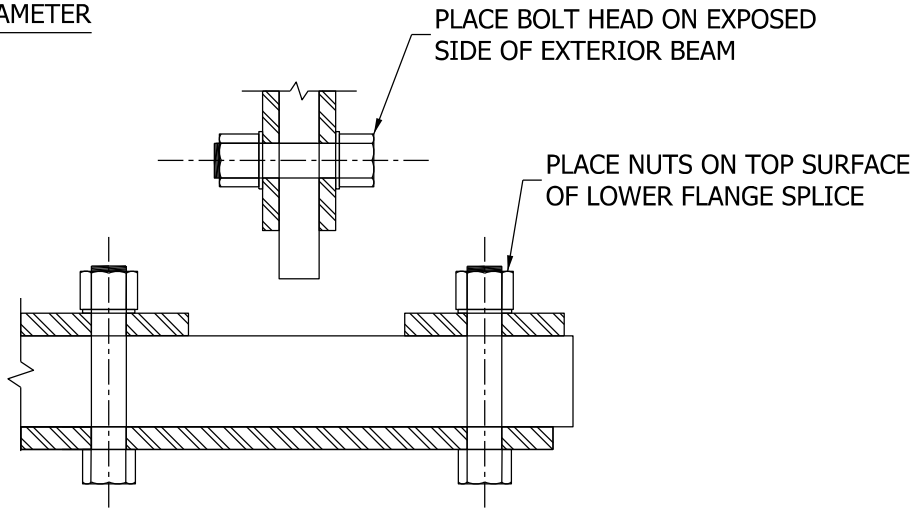

BOLTED SPLICE DETAIL

STUD AND BOLTED SPLICE DETAILS

Figure 407-6A

Back

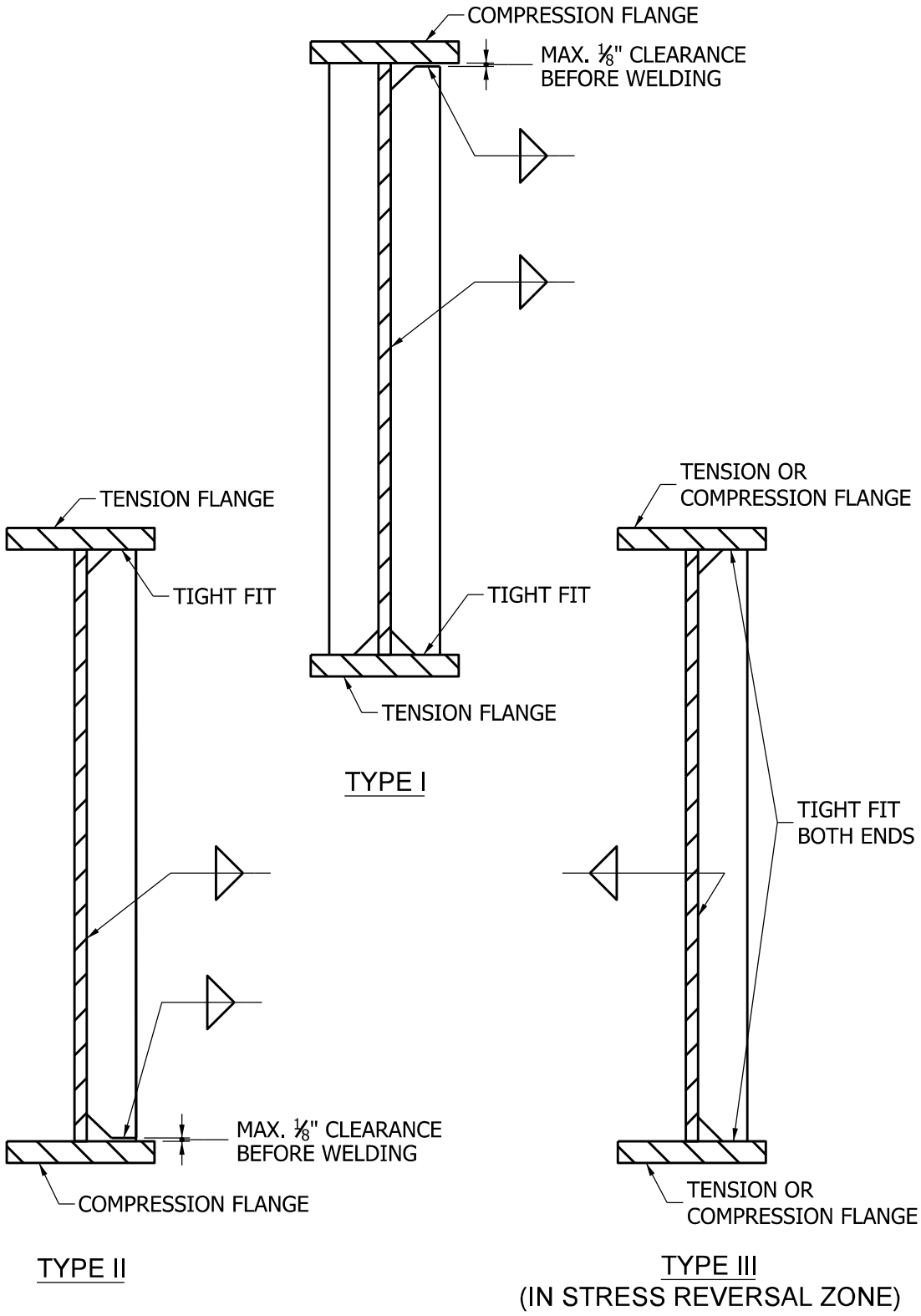

STIFFENER PLATE DETAILS

Figure 407-6B

Back

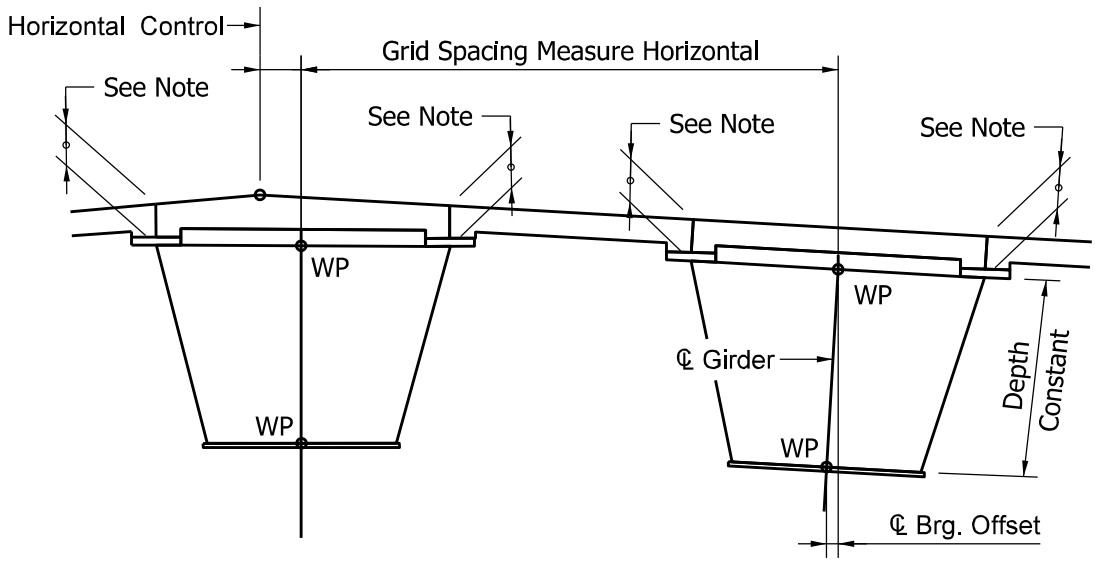

Note: Maintain constant top of slab to top of web dimension.

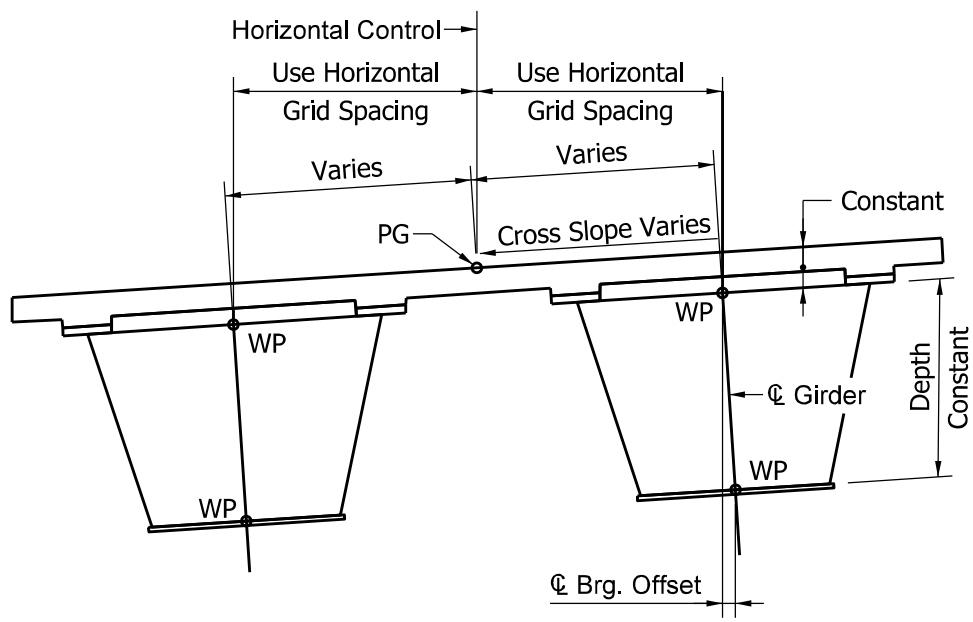

In addition to AASHTO requirements, top flanges for box girders should follow the suggestions for plate girder flanges in Section 407-1.02

For bottom flanges, plate distortion during fabrication and erection can be a problem. Check with fabricators when using bottom tension flange plates less than 1 inch thick to determine whether practical stiffness needs are met. Bottom tension flanges should never be less than ¾ inch thick. In addition, the bottom tension flanges should have a w/t ratio of 80 or less.

BOX GIRDER HORIZONTAL CONTROL

Figure 407-7A

Back

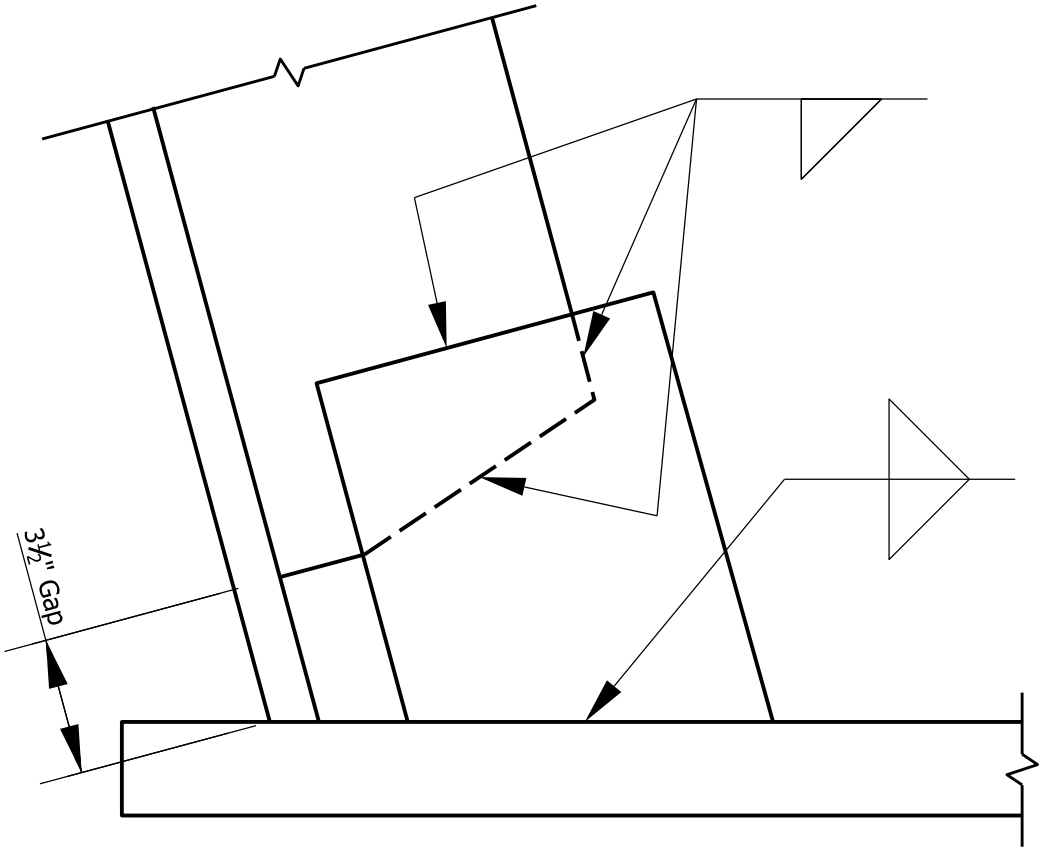

Do not specify complete penetration groove welds to connect bearing stiffeners to bottom flanges.
Weld-induced flange distortion is even more of a problem with box girder flanges than with plate girder.

BOX GIRDER STIFFENER OPTION

Figure 407-7B

Back

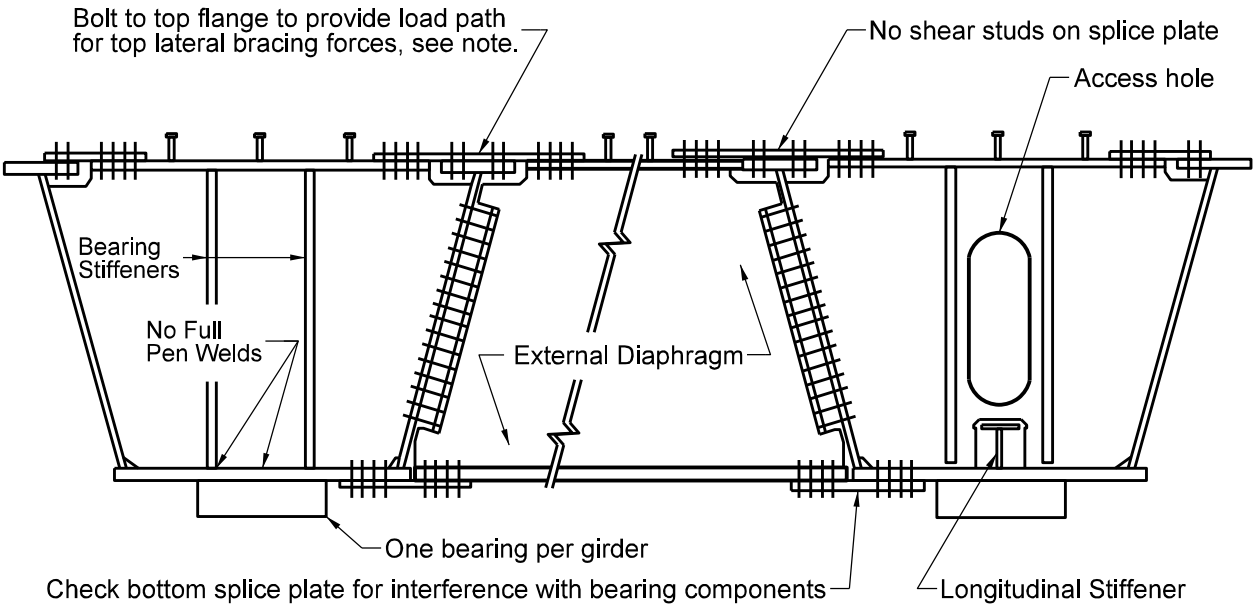

AT END BENT

AT INTERIOR BENT

Note : May not be possible to bolt splice plate to girder flange if piers are skewed and / or diaphragms are plumb with girders on a vertical guide.

MOMENT - CONNECTED PIER DIAPHRAGM

Figure 407-7C

Back