CHAPTER 404

Bridge Deck

NOTE: References to material in 2011 Design Manual have been highlighted in blue throughout this document.

TABLE OF CONTENTS

Table of Contents 2

List of Figures 4

404-1A Cross Section of Multi-Beam Bridge 4
404-2A Plan of Screeds 4
404-2B Fillet Treatment for Structural-Steel Member 4
404-2C Fillet Treatment for Prestressed-Concrete Member 4
404-2D Precast Deck Panels on Bridge with Sag Vertical Curve 4
404-2E Combination of Skew Angle and Span Length/Bridge Width Ratio 4
404-2F Typical Pour Diagram (Continuous Prestressed Concrete Beams) 4
404-2G Typical Pour Diagrams (Continuous Steel Beams or Plate Girders) 4
404-2H Modular Expansion Joint 4
404-2I Modular Expansion Joint (Field Splice) 4
404-3A Deck Overhang Treatments (Superelevated Structure) 4
404-3B Suggested Transverse Edge Beam Details (Bulb-Tee Beam) 4
404-3C Suggested Transverse Edge Beam Details (AASHTO I-Beam) 4
404-3D Suggested Transverse Edge Beam Details (Steel Plate Girder) 4
404-3E Suggested Alternate Transverse Edge Beam Details (Steel Plate Girder) 4
404-3F Suggested Alternate Transverse Edge Beam Details (Bulb-Tee Beam, AASHTO I-Beam, and Steel Plate Girder) 4
404-4A Bridge Railing Level Equivalency 4
404-4B Bridge Railing Types 4
404-4C Bridge Railing Pay Items 4
404-4D Typical Reinforcement in Bridge Sidewalk 4

Chapter 404 5

404-1.0 STRIP METHOD 5
404-1.01 Description 5
404-1.02 Application of the Strip Method to a Composite Concrete Deck 6

404-2.0 BRIDGE-DECK DESIGN 6
404-2.01 General Requirements 6
404-2.02 Dimensional Requirements for Concrete Deck 7
404-2.02(01) Screed Elevations for Cast-in-Place Concrete Deck 7
404-2.02(02) Fillet Dimensions for Steel Beams or Girders 8
404-2.02(03) Fillet Dimensions for Concrete Beams 9
404-2.03 Forms for Concrete Deck 9
404-2.03(01) Precast Deck Panels 9
404-2.03(02) Permanent Metal Forms 10
404-2.03(03) Overhang 10
404-2.04 Skewed Deck 10
404-2.05 Shear Connectors and Vertical Ties 11

404-2.06 Deck Joints 11
404-2.06(01) Longitudinal Open Joint 11
404-2.06(02) Construction Joint 11
404-2.06(03) Expansion Joints 13
404-2.07 Drainage Outlets 14
404-3.0 MISCELLANEOUS STRUCTURAL ITEMS 15
404-3.01 Longitudinal Edge Beam 15
404-3.02 Deck Overhang 15
404-3.02(01) Design Methods 16
404-3.02(02) Deck Overhang 16
404-3.03 Transverse Edge Beam 18
404-3.04 Bridge Railing 18
404-4.0 BRIDGE-RAILING DESIGN 19
404-4.01 Test-Level Selection 19
404-4.01(01) TL-2 20
404-4.01(02) TL-4 20
404-4.01(03) TL-5 20
404-4.01(04) TL-6 21
404-4.01(05) Making Test-Level Determination 21
404-4.02 Bridge-Railing-Type Selection 22
404-4.02(01) INDOT Standard Railings 22
404-4.02(02) FHWA-Approved Non-INDOT-Standard Railings 22
404-4.02(03) Considerations if Sidewalk Present 23
404-4.03 Bridge-Railing-Design Considerations 24
404-4.03(01) Superelevated Bridge Deck 24
404-4.03(02) Barrier Delineators 24
404-4.04 Bridge-Railing Transition 24
404-4.04(01) Type 24
404-4.04(02) Location 25
404-4.05 Pedestrian Railing 26
404-4.06 Bicycle Railing 27
404-4.06(01) Bicycle Path 27
404-4.06(02) Other Facility 27
404-5.0 BRIDGE APPURTENANCES 27
404-5.01 Outside Curbs 27
404-5.02 Center Curb or Median Barrier 27
404-5.03 Lighting 28
404-5.04 Traffic Signal 28
404-5.05 Utilities Located on an INDOT Bridge 28

LIST OF FIGURES

Figure	Title
404-1A	Cross Section of Multi-Beam Bridge
404-2A	Plan of Screeds
404-2B	Fillet Treatment for Structural-Steel Member
404-2C	Fillet Treatment for Prestressed-Concrete Member
404-2D	Precast Deck Panels on Bridge with Sag Vertical Curve
404-2E	Combination of Skew Angle and Span Length/Bridge Width Ratio
404-2F	Typical Pour Diagram (Continuous Prestressed Concrete Beams)
404-2G	Typical Pour Diagrams (Continuous Steel Beams or Plate Girders)
404-2H	Modular Expansion Joint
404-2I	Modular Expansion Joint (Field Splice)
404-3A	Deck Overhang Treatments (Superelevated Structure)
404-3B	Suggested Transverse Edge Beam Details (Bulb-Tee Beam)
404-3C	Suggested Transverse Edge Beam Details (AASHTO I-Beam)
404-3D	Suggested Transverse Edge Beam Details (Steel Plate Girder)
404-3E	Suggested Alternate Transverse Edge Beam Details (Steel Plate Girder)
404-3F	Suggested Alternate Transverse Edge Beam Details (Bulb-Tee Beam, AASHTO I-Beam, and Steel Plate Girder)
404-4A	Bridge Railing Level Equivalency
404-4B	Bridge Railing Types
404-4C	Bridge Railing Pay Items
404-4D	Typical Reinforcement in Bridge Sidewalk

CHAPTER 404

Bridge Decks

404-1.0 STRIP METHOD

This chapter addresses the design of typical bridge decks using approximate methods of analysis commonly referred to as the equivalent strip method.

404-1.01 Description

For the design of the deck, *LRFD* 4.6.2 provides guidance on the use of an approximate method of analysis which is analogous to those described in past *LRFD Specifications*. The strip method is based on a structural simplification in which the deck is replaced by a parallel set of continuous beams running in the primary direction of the deck, supported by unyielding supports with the span lengths taken as the beam spacing. The vehicular loading is represented by a single line of wheel loads acting on this beam. The effective width of this beam is determined from *LRFD* Table 4.6.2.1.3-1.

In analyzing a transverse strip, the following procedure may be applied.

1. Determine the number of design lanes in accordance with *LRFD* 3.6.1.1.1.

2. Position the loads on the strip in accordance with the following:

    a. only full axles of 32 kip (16 kip per wheel) are to be used;
    b. the center-to-center distance of the wheels is 6 ft;
    c. the center of the wheel does not become closer than 1 ft to the front face of the bridge railing or curb;
    d. the axle is positioned to obtain extreme moments irrespective of the position of the design or traffic lanes; and
    e. the wheel loads may be modeled as concentrated loads.

Calculate the maximum moments by considering dynamic load, multiple lane loads, and multiple-presence factors. For negative moment, see *LRFD* 4.6.2.1.6 for determination of the critical design section.

Live-load moments for the strip method may be obtained from *LRFD* Table A4-1 in lieu of calculating them.

404-1.02 Application of the Strip Method to a Composite Concrete Deck

The strip method is appropriate for each type of supporting members, including AASHTO I-beams, spread box beams, steel beams, or concrete beams with T-shaped flanges. The following will apply to the application of the strip method of analysis.

1. Reinforcing Bars. It is not necessary to use the same bar size or spacing in the top and bottom of the bridge deck in the primary direction.

2. Shear Effects. By using the strip method, an 8-in. deck is designed for flexure, and shear effects can be neglected.

Figure 404-1A illustrates the cross section of a typical beam-slab bridge with four beams spaced at 10 ft, a minimum-depth 8-in. concrete deck, and concrete railings. The deck-overhang width of 4.5 ft shown in Figure 404-1A is intended only as an example. For criteria for deck-overhang-width limitations, see Section 404-3.02. A dead load of 35 lb/ft^2 shall be considered as a future wearing surface. The 36-ft width clear roadway accepts three 12-ft width travel lanes.

404-2.0 BRIDGE-DECK DESIGN

404-2.01 General Requirements

1. Load Modifier, η. Due to the conservative deck design produced by the strip method, the η value for a deck shall be 1.

2. Thickness. The depth of a reinforced-concrete deck shall not be less than 8 in.

3. Reinforcement. The bottom-reinforcement cover shall be 1 in. The top-reinforcement cover shall be 2½ in. The primary reinforcement shall be on the outside and shall be a #5 bar or larger.

4. Maximum Bar Spacing. The maximum bar spacing for primary, distribution, and temperature reinforcement is 8 in. This maximum bar spacing is used to control cracking.

5. Sacrificial Wearing Surface. The top ½ in. of the bridge deck shall be considered sacrificial and shall not be included in the structural design or as part of the composite section.

6. Class of Concrete. Class C concrete shall be used.

7. Concrete Strength. The specified 28-day compressive strength of concrete shall not be less than 4 ksi.

8. Reinforcing-Steel Strength. The specified yield strength shall not be less than 60 ksi.

9. Epoxy Coating. All reinforcing steel in both top and bottom layers shall be epoxy coated for a bridge deck supported on beams.

10. Sealing. All exposed roadway surfaces, concrete railings, and outside copings shall be sealed from drip bead to drip bead. The underside of the copings and the exterior face of outside concrete beams shall also be sealed.

11. Length of Reinforcing Steel. The maximum length of individual reinforcing bars shall be 40 ft. All reinforcing-bar splice lengths shall be shown on the plans.

12. Truss Bars. Truss bars shall not be used in a concrete deck supported on longitudinal stringers or beams.

404-2.02 Dimensional Requirements for Concrete Deck

404-2.02(01) Screed Elevations for Cast-in-Place Concrete Deck

Screed elevations shall be furnished to ensure that the gutters, or the edges of deck on a bridge without curbs, will be at the proper final elevations. Screed elevations are required for a beam or girder bridge, or a continuous reinforced-concrete slab bridge on a superelevation transition. Screed elevations, if not shown on the plans, shall be provided in tabular form on letter-size sheets.

This information shall include a diagram or table showing the elevations at the top of the concrete deck that are required before the concrete is placed. Elevations shall be shown for both curblines, or sidewalk gutter lines, and crown of the roadway, and above all beam or girder lines for the full length of the bridge, at all bearings, and at a maximum of 10-ft intervals. Elevations at mid-span are optional and need be shown only for short spans where the nearest 10-ft station may be some distance from the point of maximum deflection. Elevations at splice points are required.

A structure on a horizontal curve or in a superelevation transition will require additional elevation points to define the concrete-deck screed elevations. A sufficient number of screed elevations shall be provided so that the contractor is not forced to interpolate or make assumptions in the field.

All elevation points shall be furnished so as to allow the proper construction and finishing of the deck.

Figure 404-2A illustrates the locations of screed elevations for a bridge deck with curbs and sidewalks. Screed elevations shall be determined using the following criteria.

1. Screed lines shall be established parallel to the skew and at approximately 10-ft intervals longitudinally within each span.

2. Screed elevations shall be provided transversely at both copings and curb lines, at the centerline of each beam or flange tip for wide-flange beams, at the profile grade, crown line if not coincident with profile grade, and longitudinal construction joints.

3. Deflections shall be computed on the basis of beam continuity at the time of deck placement.

4. Screed elevations shall be rounded to the nearer 0.005 ft.

404-2.02(02) Fillet Dimensions for Steel Beams or Girders

Figure 404-2B illustrates fillet dimensions for steel beams or girders. The following will apply to the use of this Figure. Let dimension *Y* equal the total depth of the deck and fillet.

1. Control dimension *Y* shall be established so that the theoretical bottom of deck clears the thickest and widest top flange plate by ¾ in. to compensate for the allowed tolerance for beam camber, or so that the bottom reinforcement clears the field-splice plate by ½ in., whichever controls.

2. Dimension *Y* shall be shown on deck details and rounded up to the nearer 1/8 in.

3. Control dimension *Y* shall be calculated after the vertical curve, top-flange plate and slice-plate thickness and cross slope have been determined.

4. Dimension *Y* shall be held constant at each beam or girder, where possible, throughout the structure.

5. Once established, dimension *Y* shall be used for all elevation computations such as bridge seats, top-of-splice elevations, etc.

404-2.02(03) Fillet Dimensions for Concrete Beams

Figure 404-2C illustrates fillet dimensions for concrete beams. The basic requirement is to have the top of beam not higher than 0.75 in. below the bottom of slab at the center of the span. This allows the actual beam camber to exceed the calculated value up to 1.75 in. before the top of the beam can begin interfering with the deck steel.

Dimension *A* at the center of the span represents an input item required for prestressed-beam-design computer programs, and can be determined as follows:

$$A = 0.75 + W\left(\frac{e}{2}\right)$$

Where:

W = beam top-flange width, in.

e = deck crown or superelevation slope

The following may occur.

1. The critical location of the ¾-in. minimum fillet will most often occur at the center of each span.

2. The critical location of the ¾-in. minimum fillet will sometimes occur at the ends of the beam, for example, where either the residual beam camber is negative or where the residual beam camber allowance is less than the crest-vertical-curve effect.

404-2.03 Forms for Concrete Deck

Contractor options regarding the use of permanent metal forms and precast-concrete deck panels are provided in the INDOT *Standard Specifications*. The following criteria apply to forms for a concrete deck.

404-2.03(01) Precast Deck Panels

Precast prestressed-concrete deck panels may be used as an alternative forming method for certain types of prestressed-concrete I-beam structures. If a prestressed-concrete I-beam bridge is located wholly or partially within a sag vertical curve or a superelevation transition, precast-concrete deck panels may be used if the additional class C concrete deck thickness, *t*, as shown on Figure 404-2D, is 3 in. or less. For such a prestressed-concrete I-beam bridge, a note shall be placed on the deck-slab details as follows:

Precast prestressed concrete deck panels may be used as an alternate forming method on this structure.

If deck panels are allowed for a multiple-span continuous structure, only the top mat of longitudinal steel shall be used to satisfy negative moment tensile forces.

LFRD 9.7.4.3.1 recommends that the depth of stay-in-place concrete forms shall not be less than 3.5 in. However, based upon demonstrated satisfactory performance, a depth of 3 in. or 2.5 in., as shown on the INDOT *Standard Drawings*, may be used.

404-2.03(02) Permanent Metal Forms

Metal stay-in-place forms can be used to support the deck between beams.

Plan details shall be prepared assuming that permanent metal forms will be used. The attachment details are shown in Figures 404-2B and 404-2C. Attachment details shall be shown on the plans.

404-2.03(03) Overhang

Removable forms shall be used to support a deck overhang, and may be used to support the deck between girders.

404-2.04 Skewed Deck

Skew is defined as the angle between the end line of the deck and the normal drawn to the longitudinal centerline of the bridge at that point. The two end skews can be different. In addition to skew, the behavior of the superstructure is also affected by the span-length-to-bridge-width ratio. The *LRFD Specifications* implies that the effects of a skew angle not exceeding 25 deg can be neglected, but only for a bridge with a relatively large span-length-to-bridge-width ratio. Figure 404-2E shows four combinations of skew angles 25 deg and 50 deg, and length-to-width ratios of 3:1 and 1:3. Both the 50-deg skew and the 1:3 length-to-width ratio are considered extreme values, but this often occurs where the deck constitutes the top slab of a culvert. It can be judged visually that both combinations with 25-deg skew may be orthogonally modeled for design.

LRFD C9.7.1.3 provides valid arguments supporting the limit of 25 deg concerning the direction of transverse reinforcement. It suggests that placing the transverse reinforcement parallel to a skew larger than 25 deg will create a structurally undesirable situation in which the deck is

essentially un-reinforced in the direction of principal stresses. For a skew larger than 25 deg, the transverse reinforcement shall be placed perpendicular to the beams.

The combination of 50-deg skew and length-to-width ratio of 1:3, as indicated in Figure 404-2E, produces a layout such that if the deck is a cast-in-place concrete slab without beams, the primary direction of structural action is one that is perpendicular to the end line of the deck. Because of the geometry of the layout, consideration shall be given to placing the primary reinforcement in that direction and fanning it as appropriate in the side zone. With that arrangement, the secondary reinforcement can then be placed parallel to the skew, thus regaining the orthogonality of the reinforcement as appropriate for this layout.

404-2.05 Shear Connectors and Vertical Ties

Based on the *LRFD Specifications*, composite action between the deck and its supporting components shall be ensured where it is technically feasible. The design of stud or channel shear connectors for steel sections and vertical ties for concrete beams or girders is discussed in the *LRFD Specifications*. Shear connectors and vertical ties between the deck and its supporting members shall be designed for force effects calculated on the basis of full composite action, whether or not that composite action is considered in proportioning the primary members.

404-2.06 Deck Joints

404-2.06(01) Longitudinal Open Joint

A longitudinal open joint is not required in a concrete bridge deck with a width of 90 ft or less. If a deck of wider than 90 ft is required, a longitudinal open joint may be used, or a longitudinal closure pour not less than 2 ft wide, may be used. Transverse-steel lap splices shall be located within the longitudinal closure pour. Such a joint shall remain open as long as the construction schedule permits transverse shrinkage of the deck concrete to occur. The bearings supporting a superstructure that has a deck width exceeding 50 ft shall be capable of allowing movement in the transverse direction due to temperature and shrinkage movements.

404-2.06(02) Construction Joint

A construction joint creates planes of weakness that frequently cause maintenance problems. The use of deck construction joints is discouraged and their number shall be minimized. The contractor, however, has the option of requesting additional joints if the number or locations shown on the plans are too restrictive.

1. Longitudinal Construction Joint.

a. Usage. Construction joints need not be used on a deck having a constant cross section where the pour width is less than 65 ft. This applies if the constant cross section is rotated along the length of the deck, and the angular breaks within the cross section remain constant. Where the angular breaks within the cross section are variable, as in the runout length of a superelevation transition, a construction joint shall be provided. Longitudinal construction joints will also be required on a deck with phased construction.

b. Location. The following applies.

(1) Where a construction joint is required, it shall preferably be placed along the edge of a traffic lane. A joint which is close to a curb may be placed up to 1 ft outside the traffic lane.

(2) A joint shall not be located over a beam flange, unless phased construction dictates otherwise.

(3) The joint locations shall limit the maximum pour width to 50 to 55 ft.

c. Transverse Reinforcing Steel. The lengths of transverse reinforcing bars shall be selected so bar laps do not appear within a longitudinal construction joint.

2. Transverse Construction Joint.

a. Steel Beam or Girder Structure. Concrete may be placed continuously on a deck requiring less than 260 yd^3 of concrete. A bridge deck that is poured integrally with the end bents may usually be placed with one pour.

For a longer structure that exceeds the pour-volume limitation of 260 yd^3, an alternative may be considered in which the deck length is subdivided into segments near the points of final dead load contraflexure, with segments in positive flexure placed first and those in negative flexure last.

b. Prestressed-Concrete Structure. A prestressed-concrete beam bridge made continuous for live load only shall be treated such that transverse construction joints located 2.5 ft on each side of the pier centerline shall be shown on the plans. The short deck segment and diaphragm over the support provide continuity for live load in the superstructure after the previously-poured center regions of the deck have been poured as simple-span loads.

c. Location. Where used, transverse joints shall be placed parallel to the transverse reinforcing steel.

3. Diaphragms. For a prestressed-concrete beam bridge with a cast-in-place deck, the *LRFD Specifications* requires diaphragms at the bearing points. These diaphragms shall be poured at the same time as the deck.

4. Steel Structure. A steel superstructure with short end spans relative to the adjacent interior span can be subject to uplift at the end bent during the deck pour. This can occur where the far end span is 60% or less of the adjacent interior span. Where this occurs, and if objectionable, a required transverse construction joint shall be placed in the far end span and a terminal portion of the end span poured first to counterbalance the uplift. The deck may then be poured from the opposite end forward in the usual manner. The effects of the deck pouring sequence shall be investigated, including its effect on camber, screed elevations, and stresses.

5. End Bents. The simply-supported end of a short end span can experience uplift under live load. A counterweight may be poured near the end of the span to counterbalance the uplift, or positive hold-down devices may be installed. The details of counterweights or tie-downs shall be shown on the plans. Integral end bent concrete shall be considered as a counterweight.

6. Pour Diagrams. Figure 404-2F illustrates the pour diagrams for a continuous, prestressed-concrete beam structure. The plans shall include a note similar to that shown on Figure 404-2F, revised as necessary. Figure 404-2G illustrates the pour diagrams for a continuous steel beam or girder structure.

404-2.06(03) Expansion Joints

Indiana is considered to have a cold climate for the purpose of expansion-joint design. See *LRFD* Table 3.12.2.1-1 for temperature-range values to use to calculate joint movements due to temperature.

The following provides criteria for the use of expansion joints.

1. Compression Seal Type BS. This type of seal has not performed well in the past and shall not be used as an expansion joint.

2. Expansion Joint Sealing System. This joint may be used on a bridge to be rehabilitated.

3. Strip Seal Type SS.

a. Details. The details are shown on the INDOT *Standard Drawings*.

b. Expansion Length. This expansion joint may be used for an expansion length up to 400 ft. The plans shall designate the expansion length for the contractor's use of the Joint Setting Table shown in the INDOT *Standard Drawings*, which is dependent upon the ambient temperature while the deck is being poured (see item 3.c.). Therefore, the expansion length shall be computed in feet for each joint location. This value shall be shown on the General Plan at each joint location.

c. Width of Opening. This joint is designed by the manufacturer to accommodate a minimum of 4 in. of movement. The width of the joint opening at installation depends upon the ambient temperature while the deck is being poured, and the expansion length of the structure at the joint location.

This joint-opening width is shown in the Joint Setting Table in the *Standard Drawings* for a range of ambient temperatures and expansion lengths.

4. Modular Type M.

a. Details. Figures 404-2H and 404-2 I illustrate typical schematic details for this joint.

b. Expansion Length. This joint is used only where the anticipated expansion movement exceeds the length that can be accommodated by an expansion joint type SS. For an expansion movement of greater than 4 in., a modular expansion joint is recommended.

c. Splices. Where practical, a modular joint shall be full length with no field splices across the roadway width. If a field splice is required for traffic continuity, the support beams shall be spaced at a maximum of 2 ft. See Figure 404-2 I, Section A-A.

d. Elastomeric Seal. The elastomeric seal will be one piece across the roadway width, regardless of traffic continuity considerations and the presence of a field splice in the steel armor. See the INDOT *Standard Specifications* for more information.

404-2.07 Drainage Outlets

Chapter 32 discusses the hydrological and hydraulic analyses for a bridge deck. This includes the methodologies for calculating the flow of water on the bridge and for determining the necessary spacing of drainage outlets to prevent the spread of water on the deck from exceeding the acceptable limits. Additional design criteria and details of drainage outlets on a bridge deck and closed drainage systems are also provided in Chapter 33.

To make deck-drainage facilities operationally effective and insensitive to blocking by debris or ice, they shall be large in size and few in number as suggested by *LRFD* 2.6.6. Where practical, the use of roadway drain type SQ is preferred to roadway drain type OS because it does not accumulate debris as easily. Locations of roadway drains types SQ and OS shall be checked to verify that they clear the top flange of the outside beam or girder. The large drainage facility, however, creates a discontinuity in the deck which shall be considered. A deck acting monolithically is not too sensitive to this, and for a drainage facility whose maximum dimension does not exceed 1.33 ft, no additional deck reinforcement is required. If the facility interrupts a main bar of a steel-grid deck, the facility shall be framed, and the frame shall support the interrupted element.

404-3.0 MISCELLANEOUS STRUCTURAL ITEMS

404-3.01 Longitudinal Edge Beam

The *LRFD Specifications* does not require the presence of side longitudinal edge beams but permits the utilization of solid concrete barriers as structural parts of the deck or deck system. Railing-type barriers consisting of wood, steel, or concrete beams and posts offer only negligible structural contribution, so the usable advantages relate exclusively to solid-concrete wall and safety-shape types. However, the structural contribution of concrete appurtenances to the deck shall not be considered for the strength or extreme-event limit states per *LRFD* 9.5.1, because other than immediate repair of an accidentally-damaged railing will result in temporary, yet unacceptable, understrength of the bridge. The structural contribution of the concrete railing shall only be considered for the service or fatigue-and-fracture limit states. If the bridge railing is structurally discontinuous, i.e., beam and post, a longitudinal edge beam may be required.

404-3.02 Deck Overhang

Additional top reinforcement to resist the collision load transmitted through a railing may be required in a large overhang. The width in inches of the primary strip for a cast-in-place concrete deck is $45 + 10X$, where X is the distance from load to point of support, as described in *LRFD* 4.6.2.1.3.

404-3.02(01) Design Methods

Bridge-deck overhang-width restrictions apply only to a multi-girder type superstructure, as follows:

1. Overhang width is defined as the distance from the centerline of the exterior beam to the face of the deck coping. The suggested overhang-width criteria are as follows:

    a. not more than 0.45 times the beam spacing; and

    b. not more than 5 ft.

2. The overhang width for a prestressed-concrete box-beam bridge shall not exceed 2 ft from the edge of the outside beam.

If deck drains type OS are to be used on a beam or girder structure, the minimum overhang width shall be 1.75 ft plus one-half the flange width. The deck-drain locations shall always be checked to verify that the drains clear the top flange.

404-3.02(02) Deck Overhang

For curved deck copings with reference to segmentally spaced straight beams, the above limits on maximum width shall be interpreted as the average width within a span. A ¾-in., half-round drip bead shall be placed 6 in. in from the edge of the coping. The depth of the outside coping shall be a minimum of 8 in. Once a coping depth is selected, it shall be maintained over the full length of the superstructure along that coping.

Because of the geometry of construction jacks used to support an overhang, the bottom of the coping shall be made flush with the underside of the top flange of a steel structure. The bottom of the coping may be sloped to match the slope of the top of deck, or at least be made level.

The depth of the outside coping for a superelevated deck shall be greater than the minimum 8-in. deck thickness. The coping depth will be dimension *Y* minus the superelevation rate times half the flange width at the low side, or, plus the superelevation rate times half the flange width at the high side. See Figure 404-3A. The slope of the bottom of the overhang will then be parallel to the top of the deck. The coping depth selected at each coping shall be maintained over the full length of the superstructure along that coping.

For a curved-deck layout, the distance from the centerline of the girder to the face of the coping along both copings shall be shown in a coping offset diagram. These offsets shall be shown at

10-ft intervals measured along the centerline of the girder. The offset at all break points of the girders shall also be shown.

For the design of a deck overhang with a cantilever not exceeding 6 ft from the centerline of the exterior girder to the face of a structurally-continuous concrete barrier, *LRFD* 3.6.1.3.4 permits replacement of concentrated wheel loads with a line load of 1 kip/ft intensity, located 1 ft from the face of the railing. Thus, an effective longitudinal distribution of wheel loads and an ease of design is realized. If other railings are used, the strip method may be applied.

The design approach, as described in *LRFD* CA13-4.2, is that the vehicular-collision loads are not specified and that the overhangs are designed for the maximum inelastic force effects which can be generated and transmitted by the railing resisting the vehicular impact. *LRFD* CA13.4.2 states, *the crash testing program is oriented toward survival and not necessarily the identification of the ultimate strength of the railing system. This could produce a railing system that is significantly over-designed leading to the possibility that the deck overhang is also over-designed.* The computed railing capacity will be far greater than the required capacity. Designing the overhang for full railing capacity will result in an extremely conservative section that is not in accordance with observed field behaviors. Based on observations of impacted bridge railings, an overhang designed according to previous AASHTO bridge-design specifications shows the desired behavior that the overhang does not fail if a railing failure occurs due to a collision. Accordingly, the overhang shall be designed for a collision force of 25% greater than the required capacity, which results in a design approximating present satisfactory practice.

There is a normal concentration of force effects in the end zone of the railing, and the deck may need strengthening therein. An extension of the end beam (hidden or otherwise) to the railing may be necessary to strengthen the overhang. *LRFD* Equations A13.3.1-3 and A13.3.1-4 can be used to check the railing strength for impact near the end of the railing and to compute the magnitude of the loads to be transferred to the deck overhang and the need for extra top-deck reinforcement.

The deck overhang is a cantilever slab that supports the barrier railing and can be designed independently of the deck spans. Sufficient negative moment reinforcement must be provided for the design conditions. The reinforcement must be adequately anchored into the first deck span.

Two limit states are used for design, as described in *LRFD* A13.4.1 and A13.2. Strength I and Extreme Event II requires the deck overhang to be designed for the vertical forces specified in the Extreme Event limit state. However, for a continuous concrete railing, this never controls. The strength-limit state considers vertical gravity loads and will only govern the design if the cantilever span is very large. The extreme-event-limit state considers horizontal forces caused by the collision of a vehicle with the railing, and will usually govern the deck-overhang design.

404-3.03 Transverse Edge Beam

LRFD 9.7.1.4 requires the end zone of the deck to have adequate resistance against the increase of force effects due to the structural discontinuity at the deck joint. This additional resistance is provided by the diaphragms that are commonly used for an integral end bent superstructure. In the absence of diaphragms, a transverse edge beam, hidden or exposed, is acceptable. The beam shall be designed as described in *LRFD* 4.6.2.1.4.

Typical configurations of transverse edge beams are shown in Figures 404-3B through 404-3F for various types of superstructures. For the positive-moment reinforcement, crankshaft bars shall be considered (see Figure 404-3F) instead of straight bars between beams, unless the requirements for tension development length provided in *LRFD* 5.11.2.1 can be satisfied by placement of straight bars between beams. Crankshaft bars that extend from coping to coping can be difficult to handle and install. They shall preferably consist of two bars that are lapped above the beam at the centerline of the roadway or above a beam that is adjacent to the centerline of roadway. As shown in Figure 404-3F, past designs have included a 45-deg fillet along the inside face of the edge beam. The 45-deg fillet is available as an option for additional resistance to force effects or assurance of a smooth flow of stress at a location where there is a significant change in section depth.

For a deck with no skew or with a skew angle not exceeding 25 deg, the transverse deck reinforcement shall be placed parallel to the skew, but for a greater skew angle, it shall be placed perpendicular to the supporting beams. For a greater skew angle, the transverse deck reinforcement shall be terminated at points encompassed by the edge beam. Hence, it shall not be counted as part of the resistance. For a skew angle not exceeding 25 deg, the top transverse deck steel may be included in the design of the edge beam. For a skew angle exceeding 25 deg, the negative-moment reinforcement in the edge beam shall be placed below the top longitudinal deck steel.

Although *LRFD* 4.6.2.4c specifies a strip width for positive and negative moment for the edge member, it is acceptable to use the thickened edge beam or diaphragm width. The edge beam shall be assumed to carry one truck axle for each vehicle considered.

404-3.04 Bridge Railing

Section 404-4.0 discusses the types of bridge railings that may be used. Section 404-3.04 discusses the structural evaluation of concrete or steel railings at the copings of a bridge.

A concrete barrier railing is built monolithically and continuous with no contraction joints at either mid-span or over the interior supports. Full-depth open joints shall be provided only between the end of the structure and the reinforced-concrete bridge approach and at expansion joints on a structure composed of two or more units.

The INDOT *Standard Drawings* illustrate concrete railings with the preferred arrangement of reinforcement. This arrangement of railing reinforcement is a departure from traditional design in which the railing has essentially been considered as a vertical flexural element and the longitudinal reinforcement, as secondary, being compatible with frequent relief joints. The uninterrupted railing becomes a primary longitudinal flexural element, playing a significant role in resisting both gravitational and impact loading. The longitudinal steel is appropriate for this role, in addition to controlling shrinkage-caused cracking.

Stirrups connecting continuously-placed, whether or not structurally continuous, concrete railing, curb, parapet, sidewalk, or median to the concrete deck shall be determined assuming full composite action at the interface, in accordance with *LRFD* 5.8.4.

404-4.0 BRIDGE-RAILING DESIGN

404-4.01 Test-Level Selection

The basic parameter for bridge-railing selection is the Test Level required at the site. This is a function of the following:

1. highway design speed;
2. average annual daily traffic and percent trucks;
3. bridge-railing offset;
4. highway geometry (grades and horizontal curvature);
5. height of deck; and
6. type of land use below deck.

The detailed methodology for determining a bridge railing's Test Level is described herein. The methodology has been adapted from the AASHTO publication *Guide Specifications for Bridge Railings*. The performance-level designations in the *Guide Specifications* have been converted to the Test-Level designations in National Cooperative Highway Research Program *Report 350* (NCHRP *350*) *Recommended Procedures for the Safety Performance Evaluation of Highway Features*. The *Guide Specifications* methodology is based on a benefit/cost analysis which considers occupant safety, vehicular types, highway conditions and costs. The overall objective is to match the bridge railing's Test Level, and therefore costs, to site needs.

The Performance Level (PL-__) terminology applies to the AASHTO *Guide Specifications for Bridge Railings*. Under the NCHRP *350* criteria, performance of each bridge railing and associated transition is measured in terms of Test Levels (TL-__). A bridge-railing equivalency table for converting PL-1, PL-2 and PL-3 railings to TL-2, TL-4 and TL-5 railings is provided in Figure 404-4A, Bridge Railing Level Equivalency.

NCHRP *350* identifies six Test Levels. To limit the number of necessary bridge railings, three of these Test Levels have been selected, and warrants have been developed for their use.

The Test Level is selected based on the following.

404-4.01(01) TL-2

A TL-2 bridge railing is appropriate on a bridge which satisfies the following:

1. the bridge is located on a route not on the State highway system, and the adjusted AADT in the construction year appears within the TL-2 range shown in Figure 49-6D(30), 49-6D(40), 49-6D(45), 49-6D(50), or 49-6D(55), Median Barrier and Bridge Railing Test Level Selection, for the appropriate design speed; or

2. the bridge is located on a State-highway-system route with a design speed of 45 mph or lower and the adjusted AADT in the construction year appears within the TL-2 range shown in Figure 49-6D(30), 49-6D(40), or 49-6D(45), for the appropriate design speed.

404-4.01(02) TL-4

A TL-4 bridge railing is appropriate on a bridge which satisfies the following:

1. the criteria for TL-2 are not satisfied; and

2. the adjusted AADT in the construction year appears within the TL-4 range shown in Figure 49-6D(30), 49-6D(40), 49-6D(45), 49-6D(50), 49-6D(55), 49-6D(60), or 49-6D(65), for the appropriate design speed.

404-4.01(03) TL-5

A TL-5 bridge railing is appropriate on a bridge where the adjusted AADT in the construction year appears within the TL-5 range shown in Figures 49-6D(30) through 49-6D(65), whichever applies.

404-4.01(04) TL-6

A TL-6 bridge railing is intended to reduce to almost zero the probability that a large van-type, semi-trailer truck will penetrate the railing. The TL-6 bridge railing is intended to contain and redirect a tanker trailer truck, which has a high point of contact with a bridge railing.

The decision to use a TL-6 bridge railing is a policy decision based on a site-by-site evaluation; therefore no numerical thresholds are provided. As an example, a TL-6 bridge railing may be selected on a highway with a high volume of large trucks, or tanker trucks, where rollover or penetration beyond the barrier will result in severe consequences.

404-4.01(05) Making Test-Level Determination

Test-Level determination applies directly to a level roadway on tangent, with a bridge deck surface approximately 35 ft above the under-structure ground or water surface, and with low-occupancy land use or shallow water under the structure. The traffic volume used to determine the Test Level is the construction-year AADT.

For highway conditions that differ from those described above, the AADT shall be adjusted by the correction factors shown in Figure 49-9B, Grade Traffic Adjustment Factor, K_g, and Curvature Traffic Adjustment Factor, K_c; and Figure 49-9C, Traffic Adjustment Factor,K_s, for Deck Height and Under-Structure Shoulder Height Conditions. The high-occupancy land use referred to in Figure 49-9C applies to a site where there is a relatively high probability for injury or for loss of human life. The low-occupancy land use applies to a site where the probability for injury or loss of human life is relatively low.

Once the adjusted AADT is determined, the appropriate Test Level can be determined from Figure 49-6D(30), 49-6D(40), 49-6D(45), 49-6D(50), 49-6D(55), 49-6D(60), or 49-6D(65), Median-Barrier and Bridge-Railing Test-Level Selection, for the design speed shown in the figure designation.

The following procedure will apply to the determination of the appropriate Test Level.

1. Determine adjustment factors K_g and K_c from Figure 49-9B, and K_s from Figure 49-9C.

2. Calculate the adjusted AADT by multiplying the construction-year AADT, total for both directions, by the three adjustment factors, as shown below.

$$\text{Adjusted AADT} = (\text{Construction-year AADT})\ (K_g)\ (K_c)\ (K_s).$$

3. Determine the figure in the 49-6D figures series which is appropriate for the design speed. If the design speed is 35 mph, a straight-line interpolation between Figures 49-6D(30) and 49-6D(40) shall be used to determine the adjusted AADT range.

4. Locate the appropriate line in such figure under the Site Characteristics column.

5. Move across to the columns corresponding to the appropriate Highway Type.

6. Determine which of the three columns, TL-2, TL-4, or TL-5, includes the adjusted AADT value calculated in Step 2 to identify the appropriate Test Level.

Each side of a bridge shall be checked against these criteria, especially if the bridge is on a horizontal curve. The higher Test Level warrant shall be used for both sides of a structure.

See Section 49-9.03 for example calculations for the selection of a TL-4 or TL-5 bridge railing.

For a minor bridge rehabilitation project which does not include bridge-deck replacement or deck widening and the bridge currently has a crashworthy TL-4 bridge railing, the existing railing need not be upgraded to a TL-5 railing, though the warrants for the TL-5 railing are satisfied. If there is no significant history of truck accidents, the installation of the TL-5 bridge railing shall be deferred until the time of deck replacement or deck widening.

404-4.02 Bridge-Railing-Type Selection

404-4.02(01) INDOT Standard Railings

Once the Test Level has been determined, a bridge-railing type shall be selected to match the required Test Level and other considerations, e.g., aesthetics, owner preference.

Figure 404-4B, Bridge-Railing Types, summarizes the Department-standardized bridge-railing types for each Test Level. Figure 404-4C summarizes the Department standardized bridge-railing pay items.

404-4.02(02) FHWA-Approved Non-INDOT-Standard Railings

There are other bridge railings which have passed NCHRP *350* crash tests for specified Test Levels, in addition to those which the Department has standardized. These are identified on FHWA's website, http://safety.fhwa.dot.gov/. If one of these devices is desired to be used for a

specific project, the required documentation to be downloaded from the website and provided is as follows:

1. an acceptance letter from FHWA that approves the device for use; and

2. details for the device as successfully crash tested.

The device may be modified for specific-project use. However, the shape, strength, and performance requirements cannot be changed. If the device is to be modified, the additional required documentation to be provided is as follows:

1. details showing the modifications; and

2. calculations showing that the modified version still satisfies the strength and performance requirements of the crash-tested version.

The appropriate transition or end treatment shall be determined. This can be done by further investigating the bridge-railing details. Such details shall be provided, along with documentation that the transition or end treatment is appropriate for the bridge railing. If an appropriate transition or end treatment cannot be found, the bridge railing cannot be used.

404-4.02(03) Considerations if Sidewalk Present

Including a sidewalk on a bridge can impact the selection or location of the bridge railing. Once a vehicle strikes a curb, it can become airborne. Depending upon the lateral offset of the bridge railing, the vehicle can impact the railing while airborne and thus, can interfere with the proper vehicle/bridge railing interaction.

The following will apply to the selection and location of a bridge railing in combination with a sidewalk.

1. Design Speed of 45 mph or Lower. Only a railing shown to be crashworthy in the presence of a sidewalk may be used. The bridge-railing type can be selected based on the Test Level required at the site as described above, or, a vertical concrete wall of the appropriate height may be provided at the back of the sidewalk. The Test Level of such wall shall match that of a concrete shape F bridge railing.

2. Design Speed of 50 mph or Higher. The bridge railing cannot be placed at the coping side of the sidewalk; therefore it must be placed between the roadway and the sidewalk. A pedestrian- or bicycle railing shall then be placed at the coping side of the sidewalk as described below. The height of the vehicular bridge railing between the roadway and the

sidewalk shall satisfy or exceed the minimum height requirement of a pedestrian railing, 42 in., or a bicycle railing, 54 in., whichever applies. Where the vehicular bridge railing is placed between the roadway and the sidewalk, the sidewalk need not be raised; i.e., the roadway surface and sidewalk surface may be at the same elevation. However, the sidewalk drainage pattern shall be reviewed. The guardrail transition and bridge-railing transition shall be connected to the pedestrian railing. An impact attenuator type R1 shall be connected to the bridge railing.

404-4.03 Bridge-Railing-Design Considerations

404-4.03(01) Superelevated Bridge Deck

The INDOT *Standard Drawings* illustrate the orientation of concrete shape F bridge railing with the bridge-deck surface for a bridge on a superelevated roadway section.

404-4.03(02) Barrier Delineators

Barrier delineators are to be placed on each bridge railing. However, barrier delineators are not to be placed on a bridge railing at the coping side of a sidewalk. The location of the delineators along the bridge railing shall be as described in the INDOT *Standard Specifications*. Barrier delineators shall be placed on each roadway face of a bridge-railing transition.

404-4.04 Bridge-Railing Transition

A steel-element roadside barrier will deflect upon impact, but a rigid bridge railing normally will not. Therefore, where a steel-element roadside barrier approaches a rigid bridge railing, a transition is necessary to gradually strengthen the steel-element roadside barrier as it approaches and connects to the bridge railing. The following will apply to such transitions.

404-4.04(01) Type

The preferred transition for each bridge-railing type is shown in Figure 404-4B. Most systems include both a guardrail transition and a bridge-railing transition. The details are shown on the INDOT *Standard Drawings* identified in Figure 404-4B.

A transition is typically used at each location, except where an intersecting road or driveway prevents the placement of a proper device. To use the bridge-railing transition listed, there shall be space to place at least 25 ft of roadside barrier between a curved W-beam guardrail connector

terminal system or curved W-beam guardrail system and the beginning of a guardrail transition type TGB.

Bridge-railing transition type WBC is not identified in Figure 404-4B. It may be used with concrete bridge railing type FC, only where the proximity of an intersecting road or driveway prevents the proper installation of the preferred transition. Where at least one bridge-railing transition type WBC is required, such transition shall be used for all bridge-railing ends.

404-4.04(02) Location

The following will apply to the location of a bridge-railing transition.

1. Reinforced-Concrete Bridge Approach (RCBA). The ideal treatment is to locate a bridge-railing transition along the RCBA. This will keep the deck drainage not collected in the deck drains from flowing down the spill slopes at the bridge corners, which can cause erosion at the end bents. Placing the transition on the RCBA will require moving the connection between the bridge-railing transition and the guardrail transition a sufficient distance from the wing to allow placement of the posts required with the transition.

2. Bridge Corner. A transition shall be used at each bridge corner for each bridge-railing type, including the trailing end of a bridge railing on a one-way roadway, such as a ramp, or one roadway of a divided highway.

3. Bridge Deck. If it is necessary to locate the transition on the bridge deck, the wings shall be extended laterally a sufficient distance to provide a minimum clearance of 6 in. between the roadside face of the wing and the backs of the guardrail-transition posts.

4. Intersecting Road or Drive. The presence of an intersecting road or drive close to the bridge can complicate the location of the transition. Where practical, the intersecting road or drive shall be relocated to allow placement of the bridge-railing transition on the RCBA. Where this is not practical, the consideration of the bridge-railing transition shall be determined in the order of preference as follows:

    a. it shall be placed on the bridge deck if the structure has integral or semi-integral end bents;

    b. a modified version of the bridge-railing transition that may be used with guardrail transition type WGB shall be placed on the RCBA;

c. a modified version of the bridge-railing transition that may be used with guardrail transition type WGB shall be placed on the bridge deck if the structure has integral end bents;

d. an impact attenuator shall be used at the end of the bridge railing; or

e. since standard details for modified versions of bridge-railing transitions that may be used with the guardrail transition type WGB are not available, details of a modified version of the appropriate concrete-bridge-railing transition shall be included in the plans if an intersecting drive or public road approach cannot be relocated away from the end of the structure.

5. Expansion Joint. The bridge-railing transition may not be located on the bridge deck if a deck expansion joint is located between the bridge deck and the mudwall.

6. Alternative Location. In a situation with severe space restrictions, transition location or design modifications which do not comply with the above criteria may be necessary.

404-4.05 Pedestrian Railing

If a sidewalk is to be placed on a bridge, and the design speed is 50 mph or higher, a bridge railing shall be used to separate vehicular traffic from pedestrians, and a pedestrian railing shall be placed on the outside edge of the sidewalk.

If the design speed is 45 mph or lower, the need for protection of pedestrians by means of a combination vehicular bridge railing/pedestrian railing shall be considered on a site-by-site basis. Additional considerations to be made are as follows:

1. design speed;
2. vehicular-traffic volume;
2. pedestrian-traffic volume;
4. accident history;
5. geometric impacts (e.g., sight distance);
6. practicality of providing proper end treatments;
7. construction costs; and
8. local preference.

Figure 404-4D shows the typical reinforcement requirements for a bridge sidewalk.

404-4.06 Bicycle Railing

If bicyclists are permitted to use a bridge, a bicycle railing may be warranted. The following will apply.

404-4.06(01) Bicycle Path

This is defined as a bikeway physically separated from motorized vehicular traffic by an open space or barrier and either within the highway right of way or within an independent right of way. Each bridge which is a part of a bicycle path will require bicycle railing of 42-in. minimum height.

404-4.06(02) Other Facility

The need for combination vehicular bridge railing/bicycle railing to protect bicyclists shall be considered on a site-by-site basis. Additional considerations to be made are as follows:

1. motor-vehicular traffic design speed;
2. motor-vehicular traffic volume;
3. bicycle traffic volume;
4. accident history;
5. geometric impacts (e.g., sight distance);
6. practicality of providing proper end treatments;
7. construction costs; and
8. local preference.

404-5.0 BRIDGE APPURTENANCES

404-5.01 Outside Curbs

Except for the base of a two-tubed curb-mounted bridge railing, outside curbs are only used on a bridge in conjunction with a sidewalk. The typical curb height is 8 in. where used in conjunction with a sidewalk, unless a vehicular bridge railing is placed between the roadway and the sidewalk. For this situation, the roadway and sidewalk will be at the same elevation.

404-5.02 Center Curb or Median Barrier

A center curb or a median barrier on a structure shall be a continuation of the curb or median barrier on the approaching roadway. The use of a roughened construction joint between the bridge deck and the center curb or median barrier shall be provided. Curb or median barrier shall be anchored to the bridge deck with #5 bars spaced at 8 in. maximum.

404-5.03 Lighting

The Highway Management Division's Office of Traffic is responsible for determining warrants for highway lighting. The district traffic office can offer input regarding lighting requirements for an INDOT project in an urban area. Warrants for, and the design of, lighting for a local-public-agency project shall be determined by the designer and the LPA. Section 78-2.07 discusses warrants for lighting on a bridge structure. Where lighting will be provided on an INDOT bridge, the Traffic Review Team will determine the pole size and spacing and submit this information to the project manager. The INDOT *Standard Drawings* provide the details for attaching standard luminaire supports to a concrete bridge railing.

404-5.04 Traffic Signal

A traffic signal can currently be, or be proposed to be, located near a bridge. Conduits may be provided across the bridge for the electrical service. The following will apply.

1. Bridge Location. For each bridge located within an urbanized area, or within 2 mi of its boundary, the designer shall contact the Office of Traffic. The Office will determine the need for conduits across the bridge.

2. Junction Boxes. Where conduits will be provided, junction boxes shall be located at approximately 250-ft intervals. The Office of Traffic will provide details for the junction boxes for incorporation into the plans.

404-5.05 Utilities Located on an INDOT Bridge

The Office of Utilities and Railroads' Utilities Team and the designer shall work together to determine the proper accommodation of utilities across a highway structure. Chapter 10 describes the policy regarding the attachment of utility lines to a bridge. Chapter 10 also discusses procedures regarding permit applications and cost reimbursement. For approved utility attachments to a bridge, the following procedure applies.

1. Preparation. The utility company must prepare the attachment details for the utility. These are submitted to the Utilities Team.

1. Review and Approval. The Utilities Team reviews the attachment details and submits these to the designer for comment. The Utilities Team will notify the utility company of needed revisions. Once all changes have been made, the Utilities Team will approve the utility-attachment details and process the Utility Agreement.

3. Plans Incorporation. The Utilities Team will submit the approved utility-attachment details to the designer for incorporation into the final contract plans.

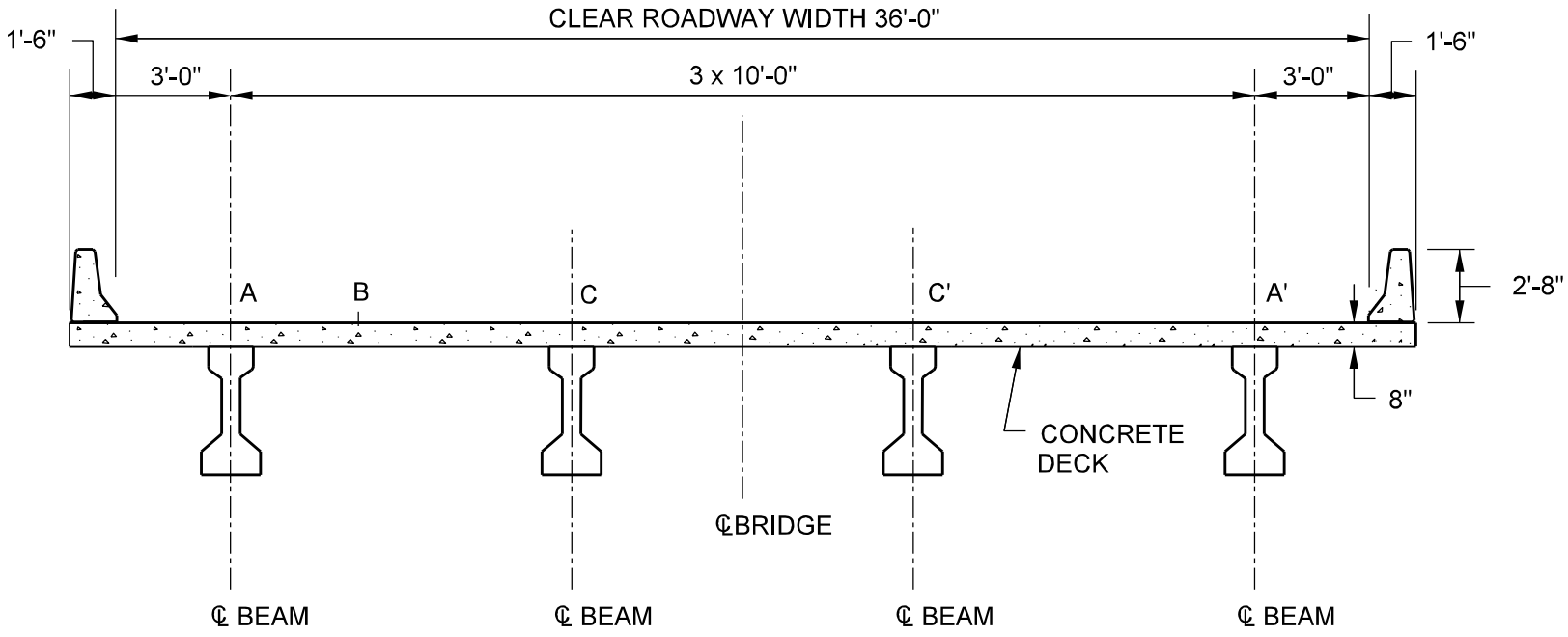

CROSS SECTION OF MULTI-BEAM BRIDGE

Figure 404-1A

Back

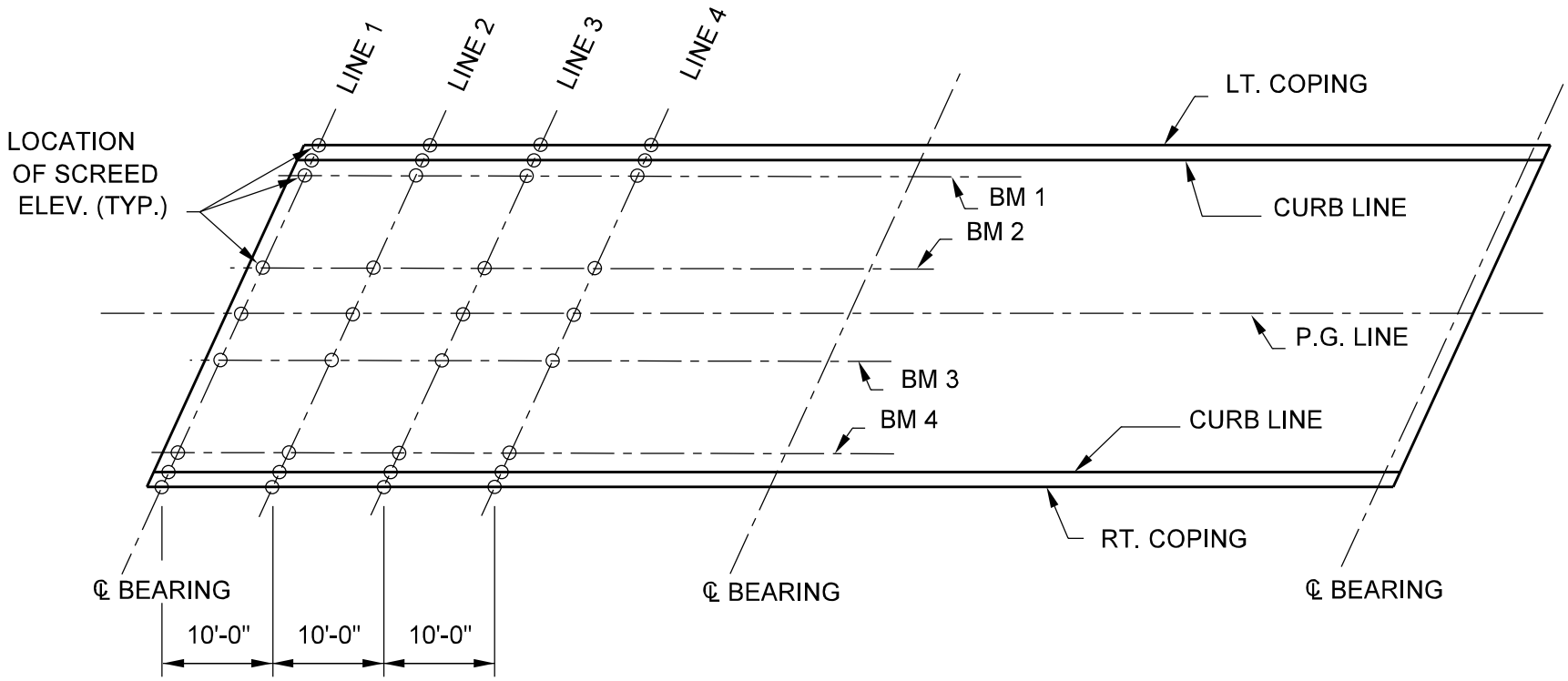

Note: 10'-0" spacing pattern may begin at left support or may be centered in span.

PLAN OF SCREEDS

Figure 404-2A

Back

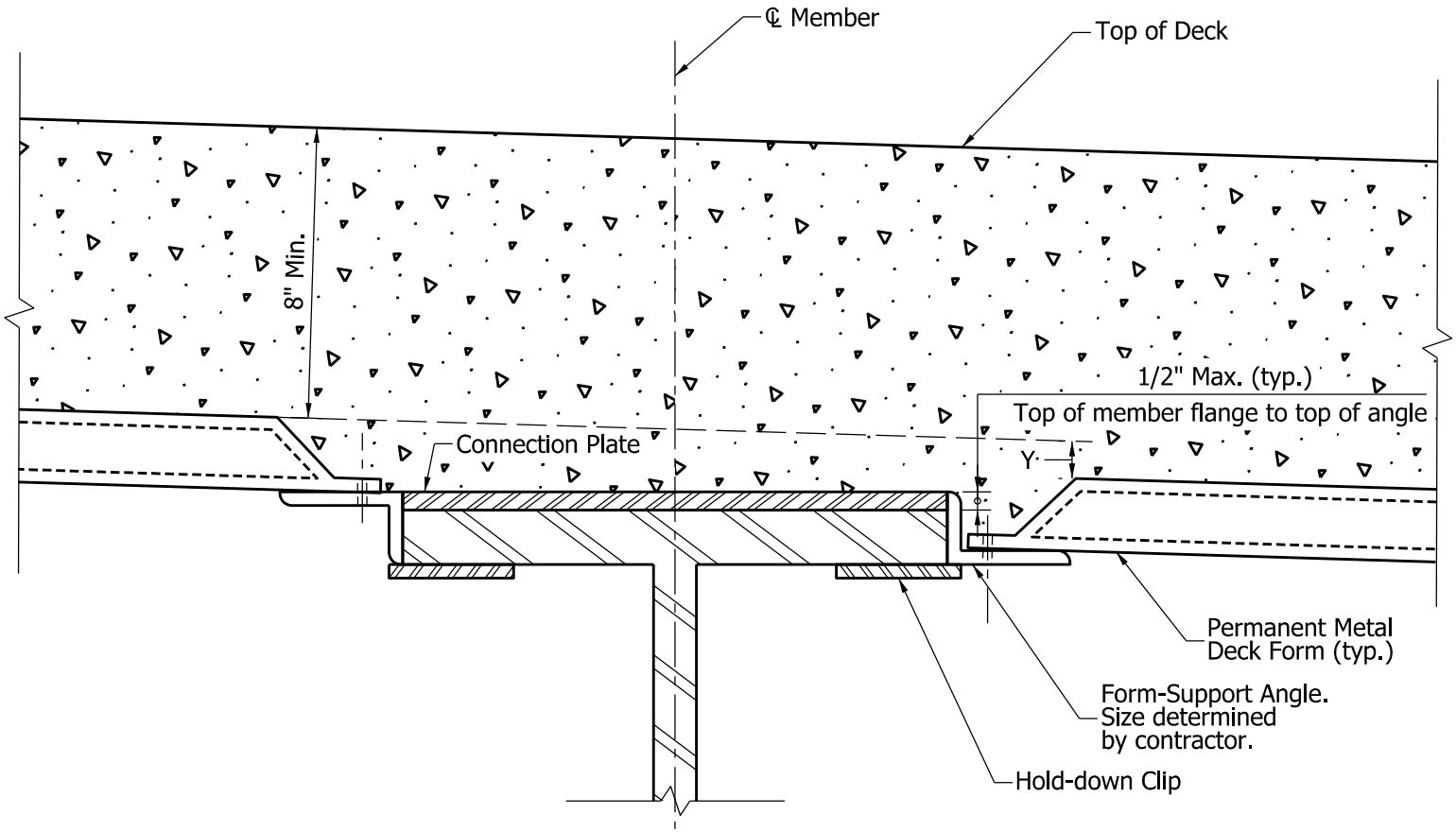

FILLET TREATMENT FOR
STRUCTURAL-STEEL MEMBER

Figure 404-2B

Back

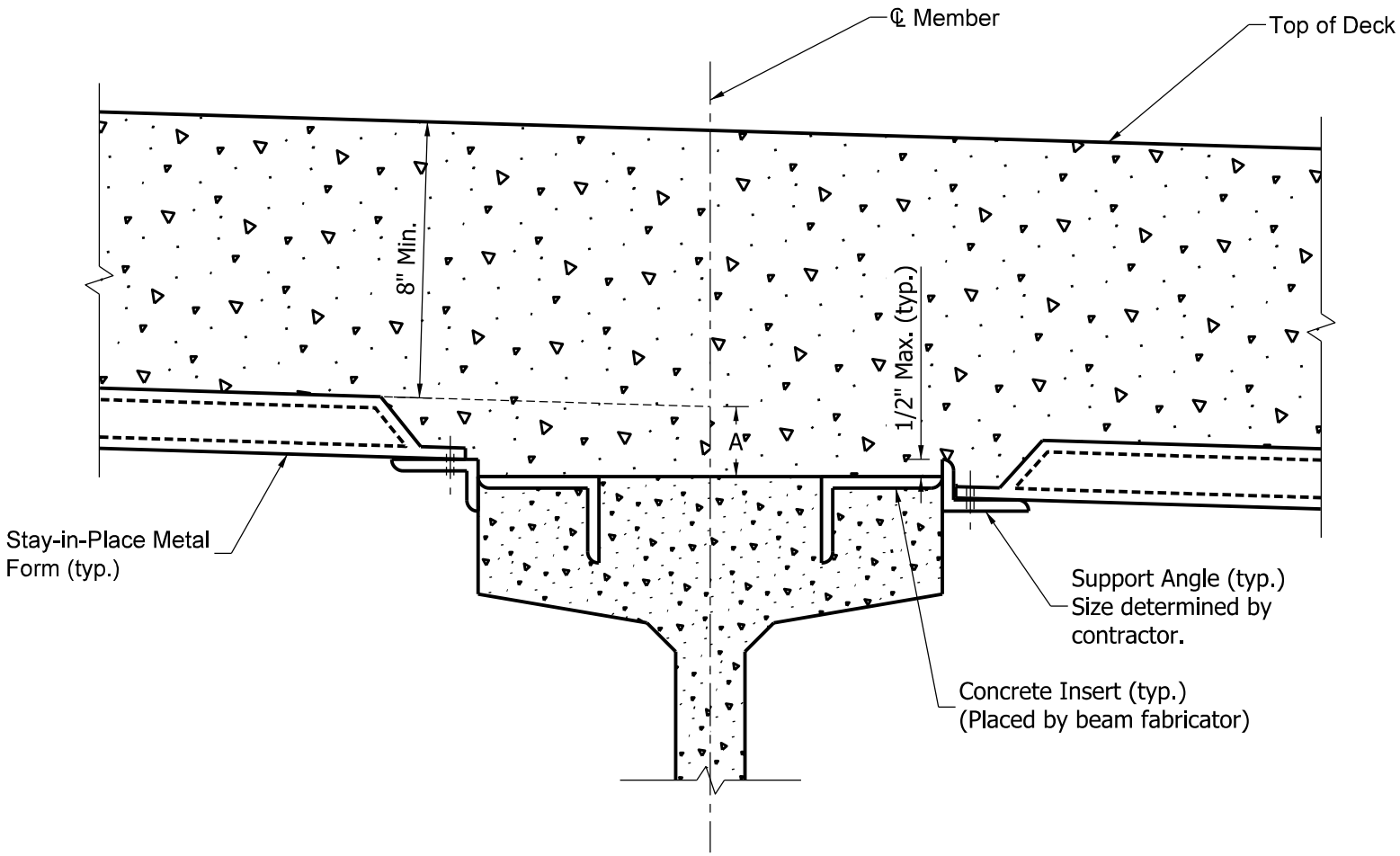

FILLET TREATMENT FOR
PRESTRESSED-CONCRETE MEMBER

Figure 404-2C

Back

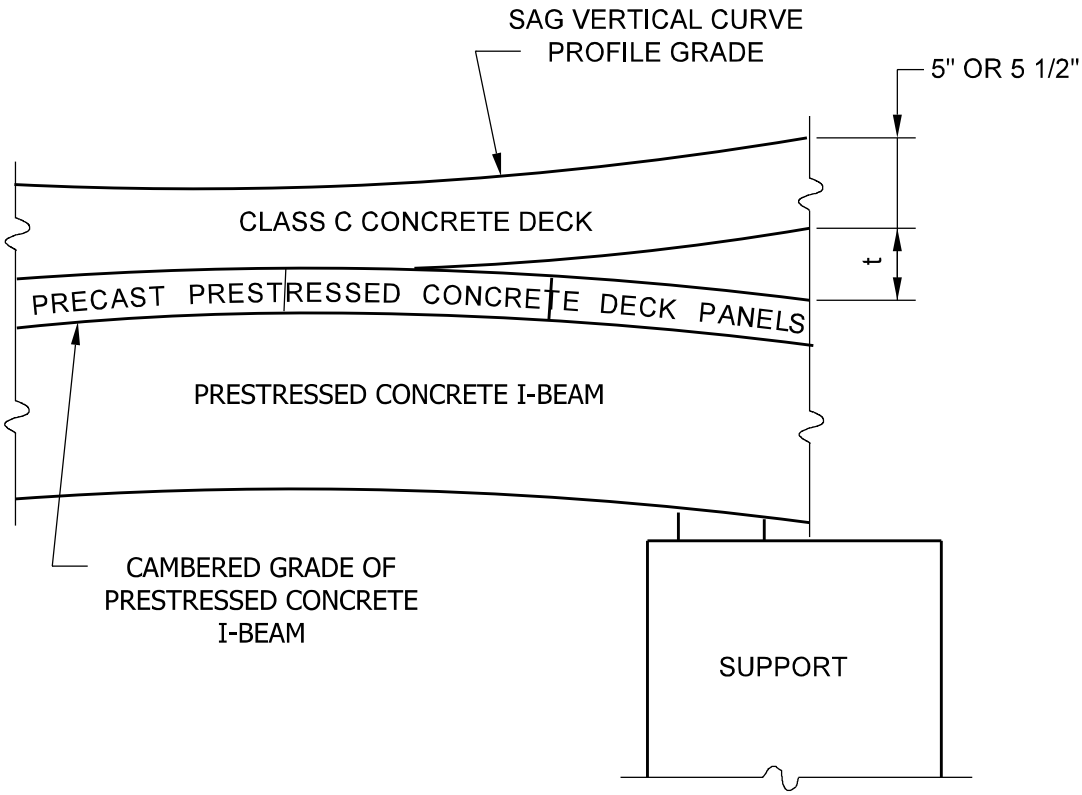

PRECAST DECK PANELS ON BRIDGE WITH
SAG VERTICAL CURVE

Back

Figure 404-2D

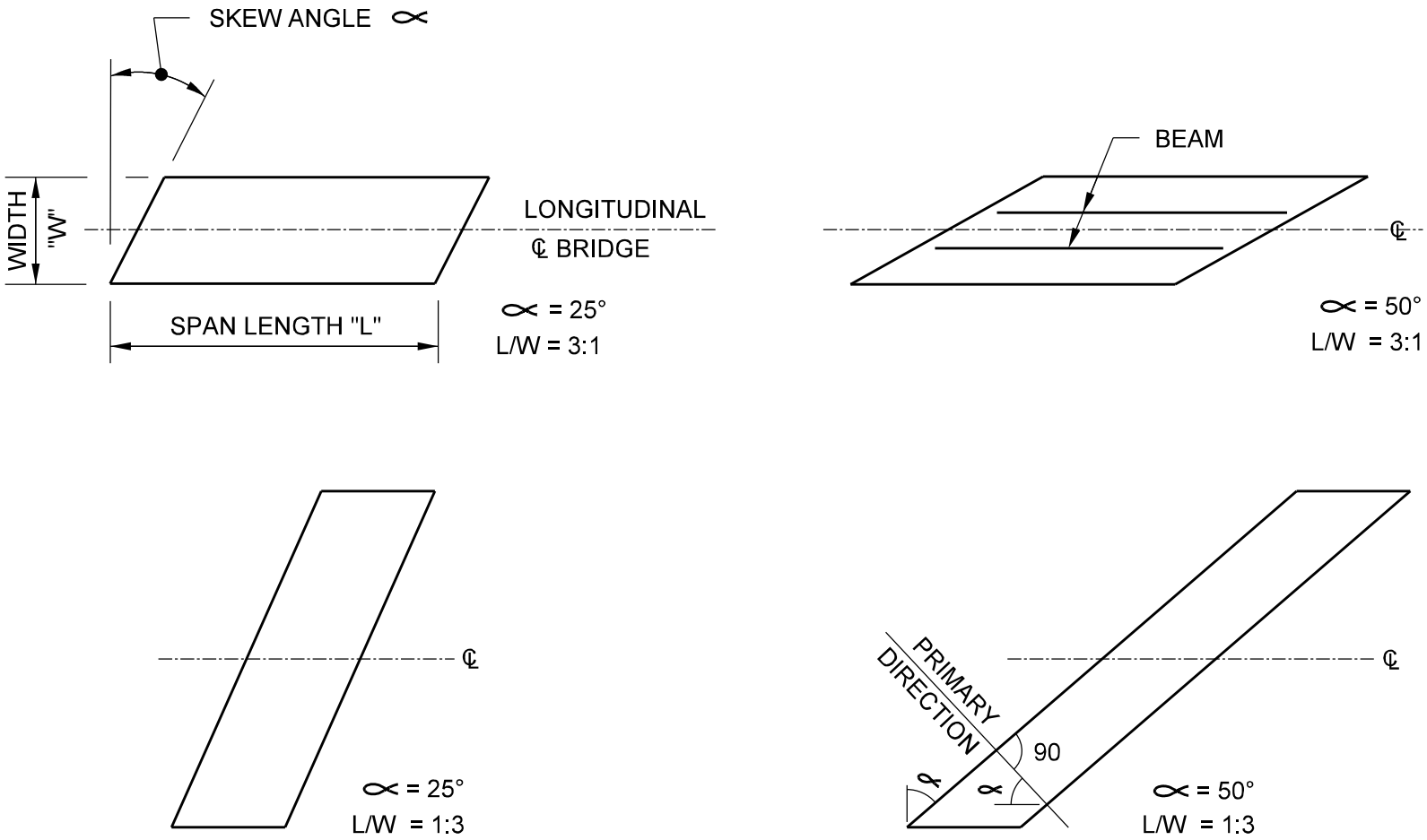

COMBINATION OF SKEW ANGLE AND SPAN LENGTH/BRIDGE WIDTH RATIO

Figure 404-2E

Back

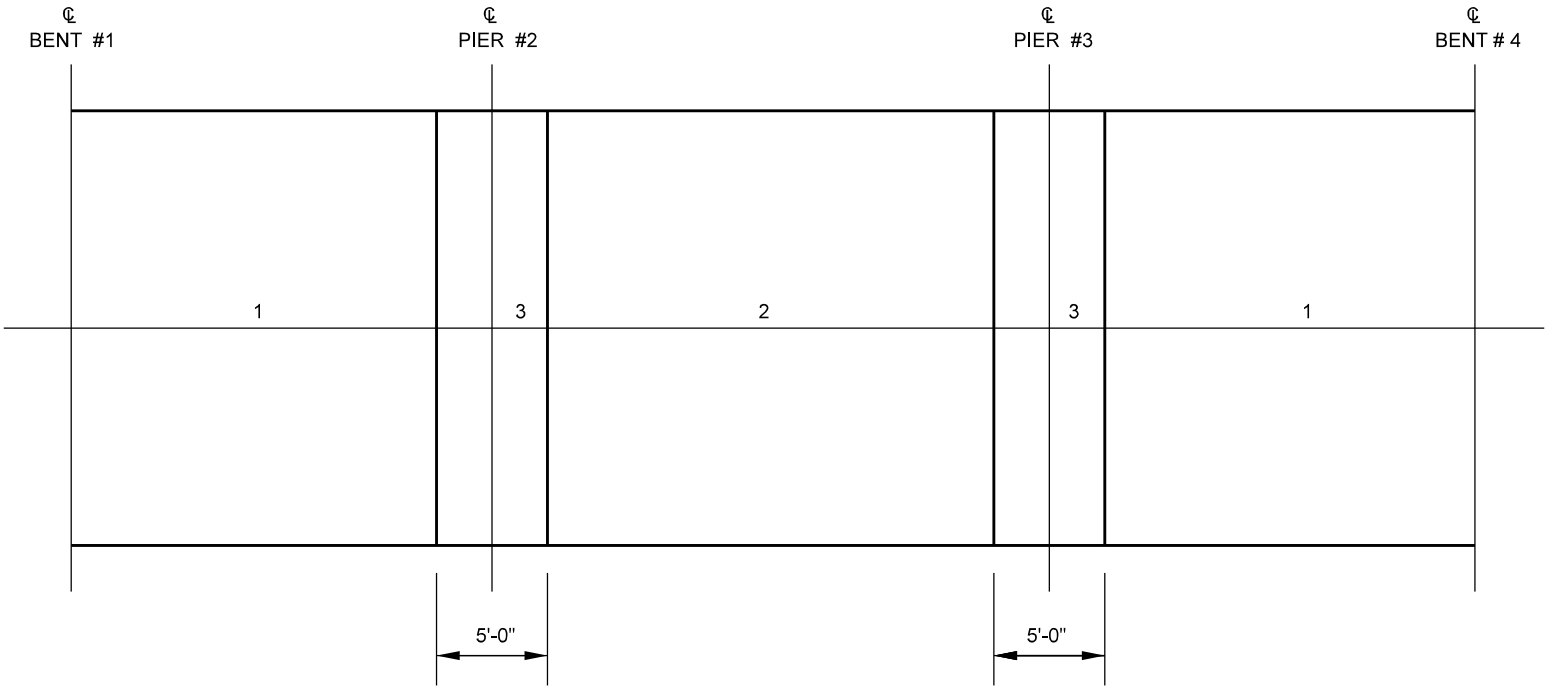

The following note, revised as necessary, should be shown on the plans for a continuous prestressed concrete I-beam, bulb-T, or box beam structure in which the composite slab over the interior supports is designed for the live load:

POUR NUMBERS INDICATE SEQUENCE OF POURS, POURS OVER INTERIOR SUPPORTS SHALL BE MADE LAST TO REDUCE THE EFFECT OF THE SLAB DEAD LOAD IN THE NEGATIVE MOMENT AREA. POUR #3 WILL INCLUDE THE DIAPHRAGM AT THE SUPPORT AND SHALL BE HELD TO A 5'-0" LENGTH. INTERIOR DIAPHRAGMS WILL BE POURED BEFORE SLAB IS POURED.

TYPICAL POUR DIAGRAM
(Continous Prestressed Concrete Beams)

Figure 404-2F

Back

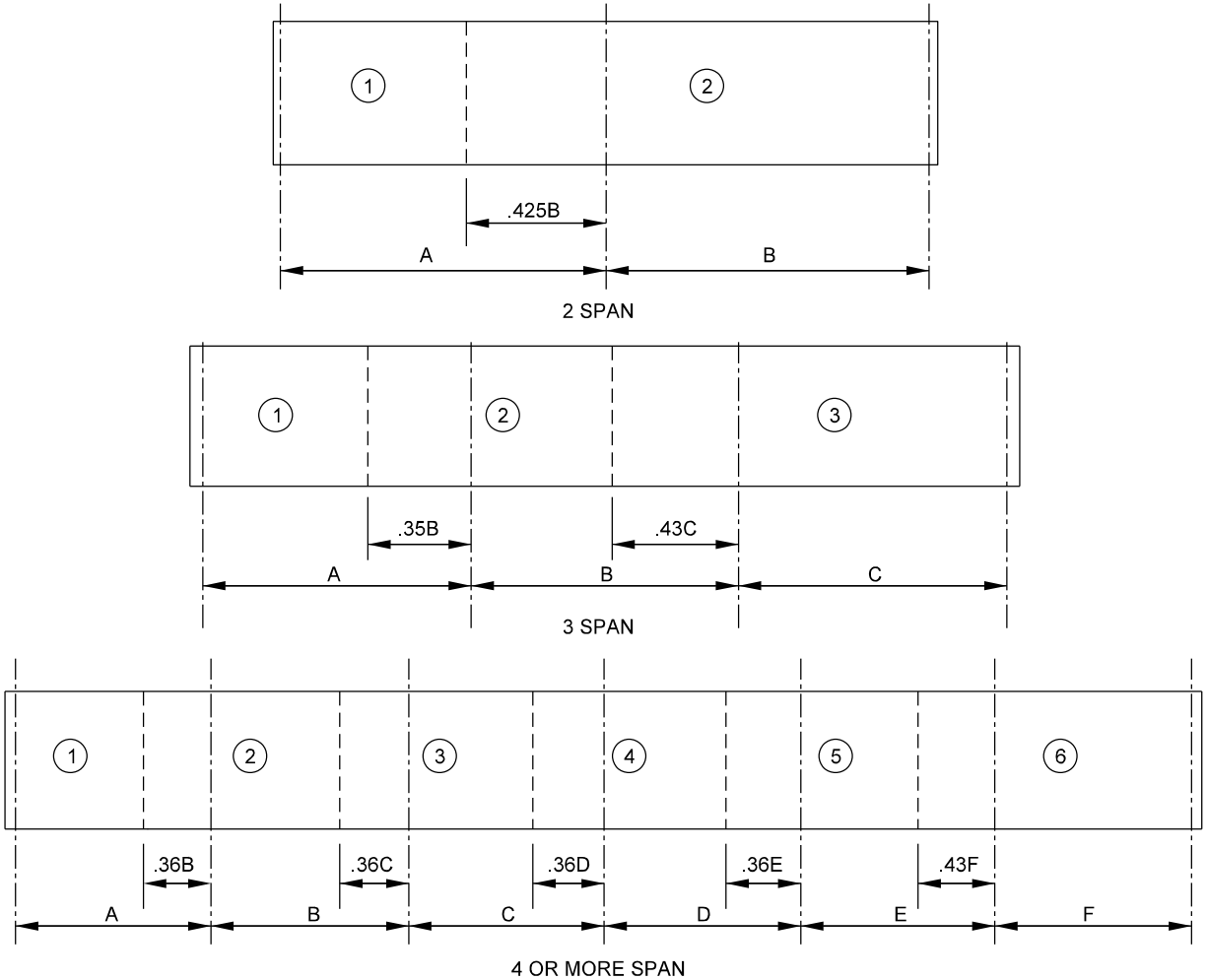

Note: Pour numbers indicate sequence of pours. Avoid placing construction joints at same location as the beam or girder splice.

TYPICAL POUR DIAGRAMS
(Continous Steel Beams or Plate Girders)

Figure 404-2G

Back

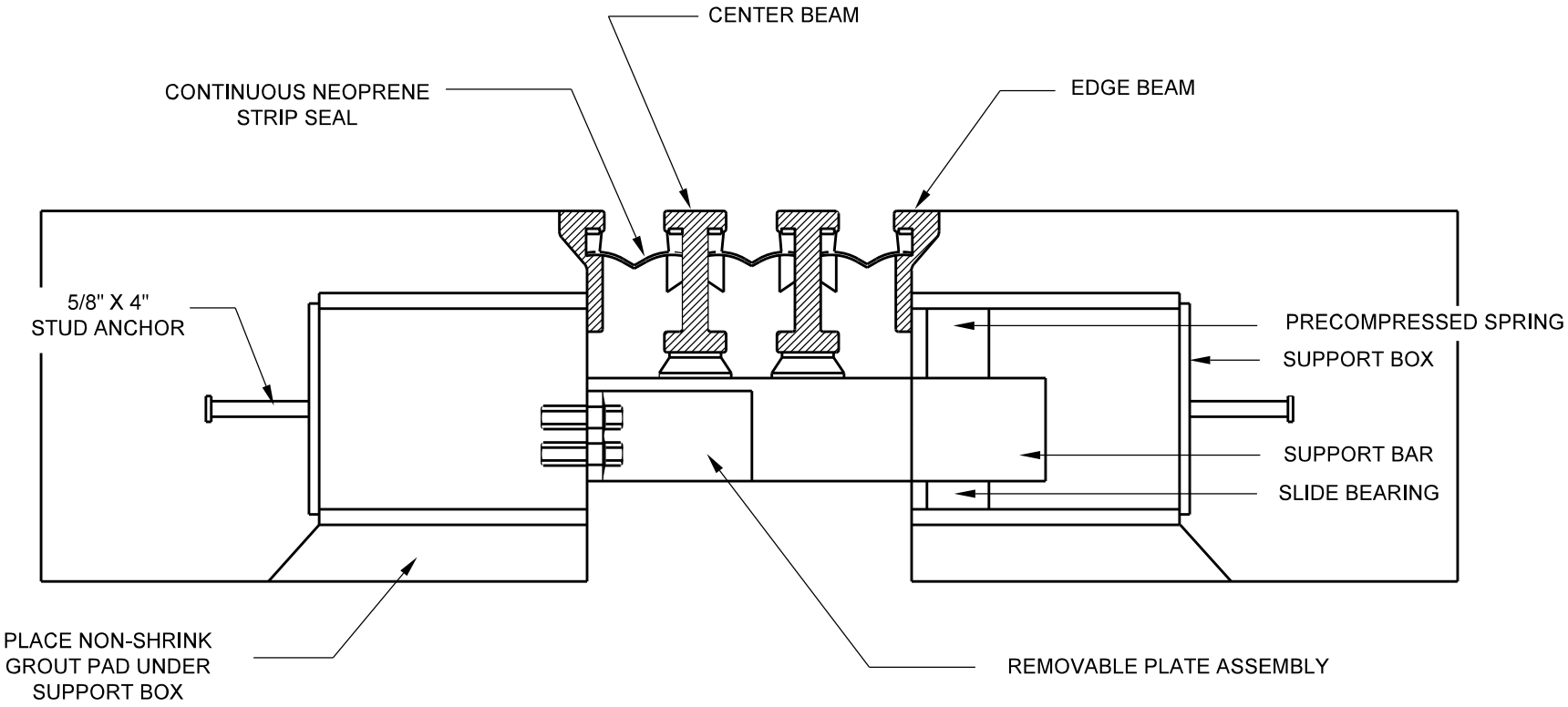

MODULAR EXPANSION JOINT

Figure 404-2H

Back

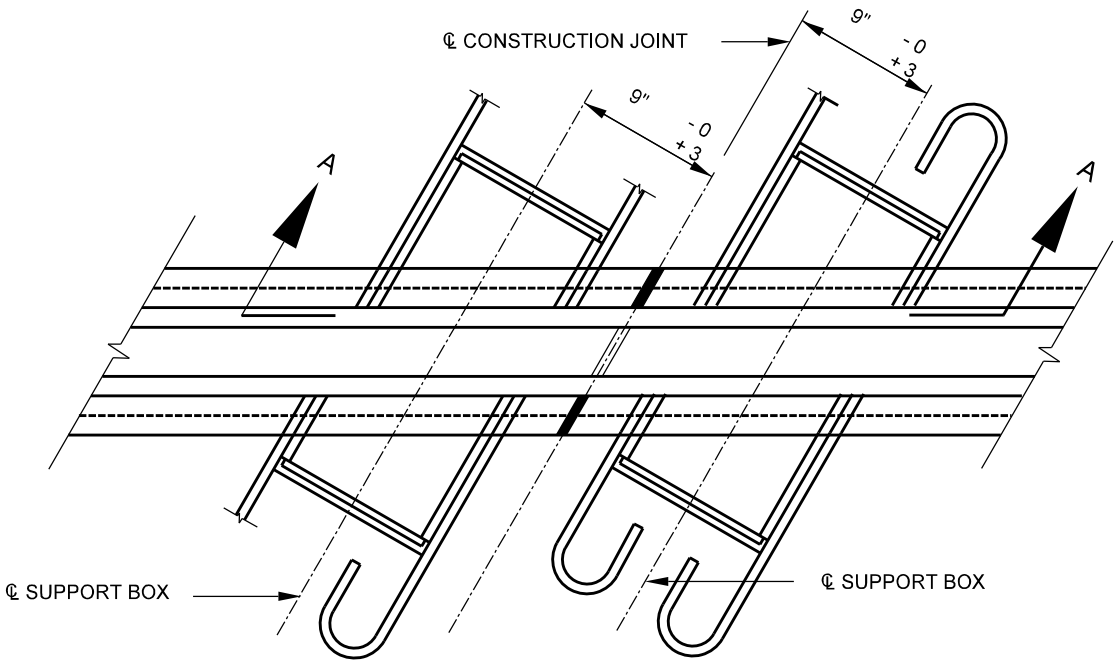

PLAN

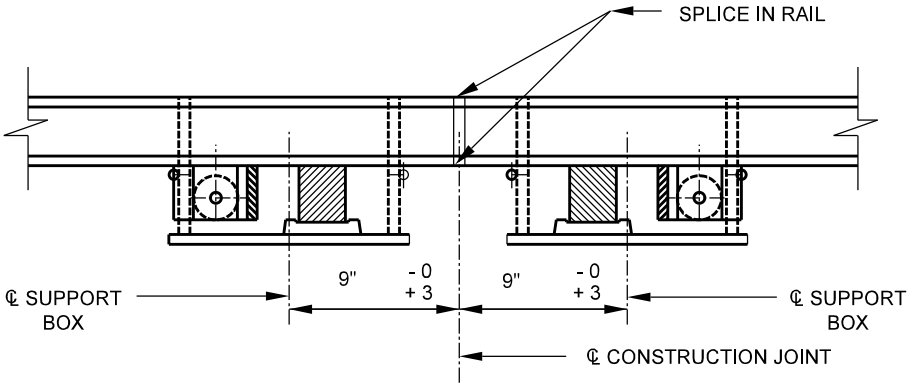

SECTION A-A

Where modular joints are placed in the roadway, the following will apply:

1. *The ℄ of the support box will not be less than 9" nor more than 1'-0" from the construction joint.*
2. *The elastomeric seal will be one piece across the roadway width and will not be spliced at the construction joint.*
3. *Where practical, a modular joint should be a one-piece rail across the roadway width.*

MODULAR EXPANSION JOINT
(Field Splice)

Figure 404-2 I

Back

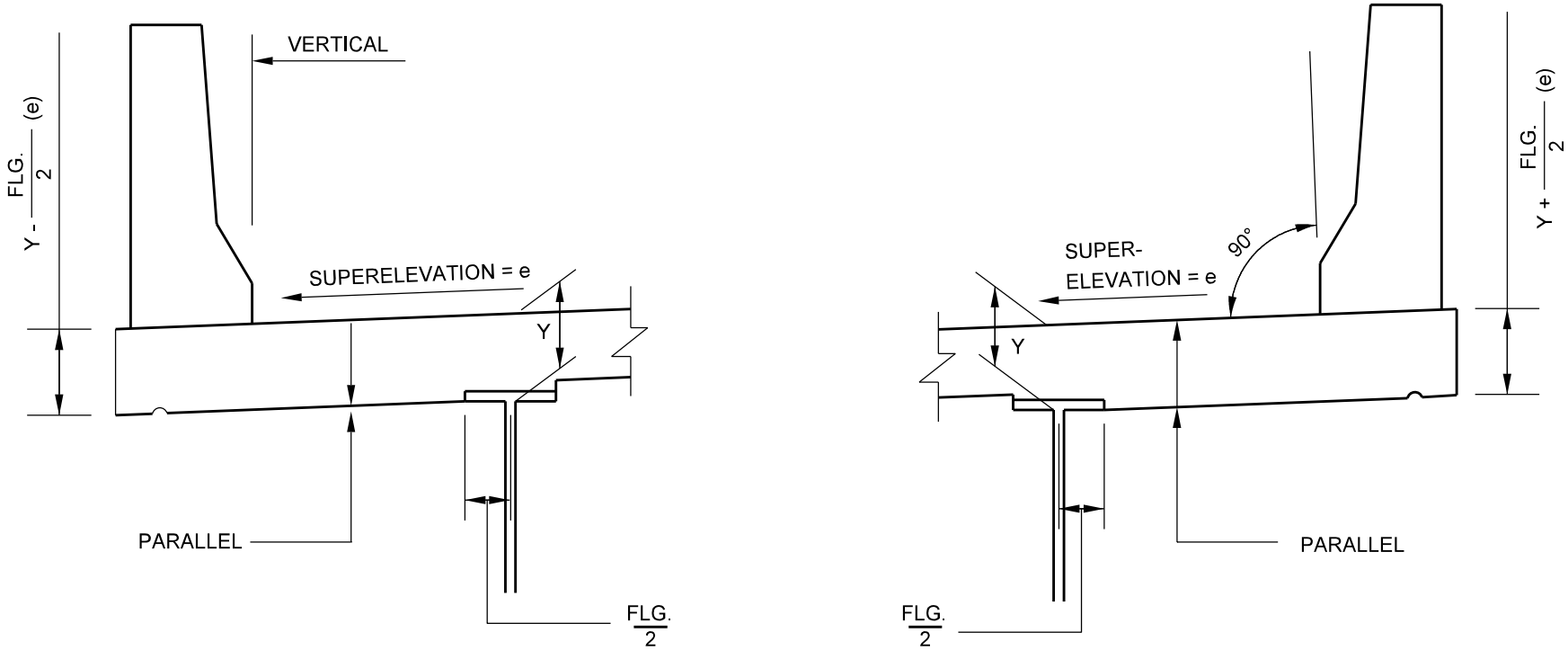

Y = CONTROL DIMENSION (in.)
FLG. = FLANGE WIDTH (in.)
e = SUPERELEVATION RATE (%)

DECK OVERHANG TREATMENTS
(Superelevated Structures)

Figure 404-3A

Back

NOTE: ALL REINFORCING STEEL SHALL BE EPOXY COATED.

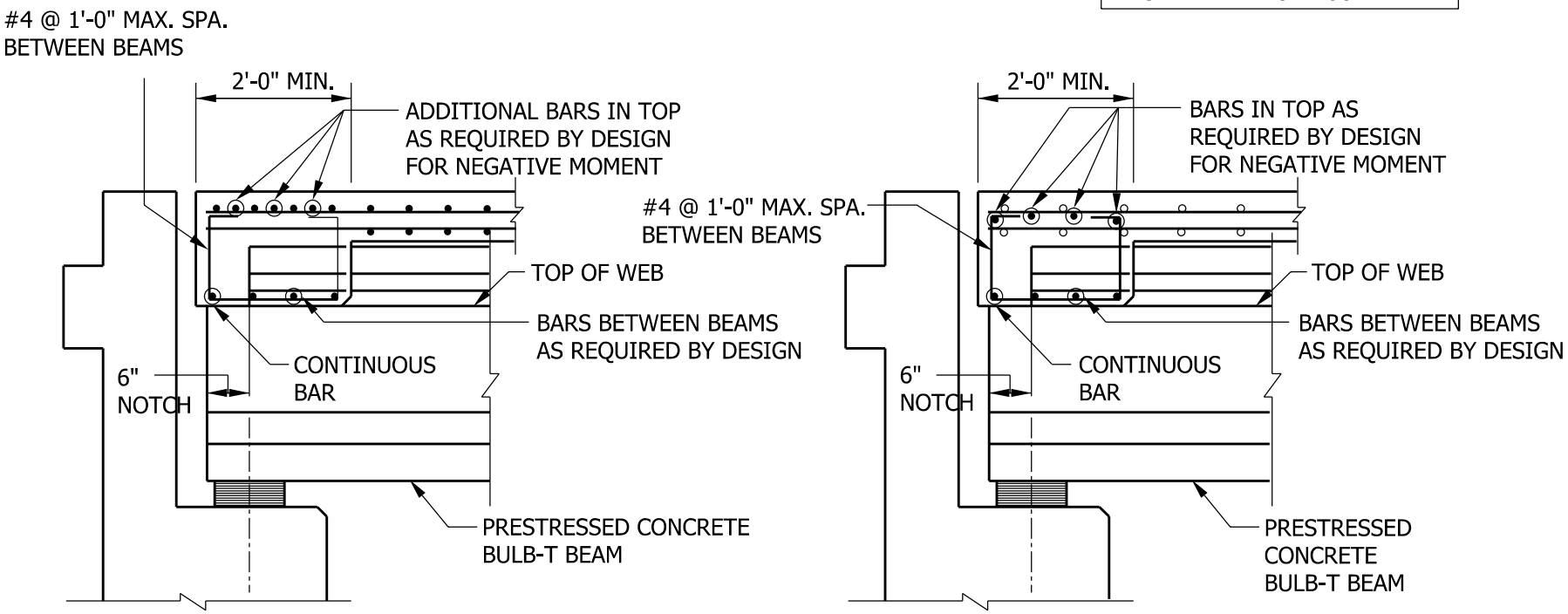

SKEW 25° OR LESS

SKEW OVER 25°

SUGGESTED TRANSVERSE EDGE BEAM DETAILS
(For Bulb-Tee Beams)

Figure 404-3B
(Page 1 of 2)

Back

NOTE: ALL REINFORCING STEEL SHALL BE EPOXY COATED.

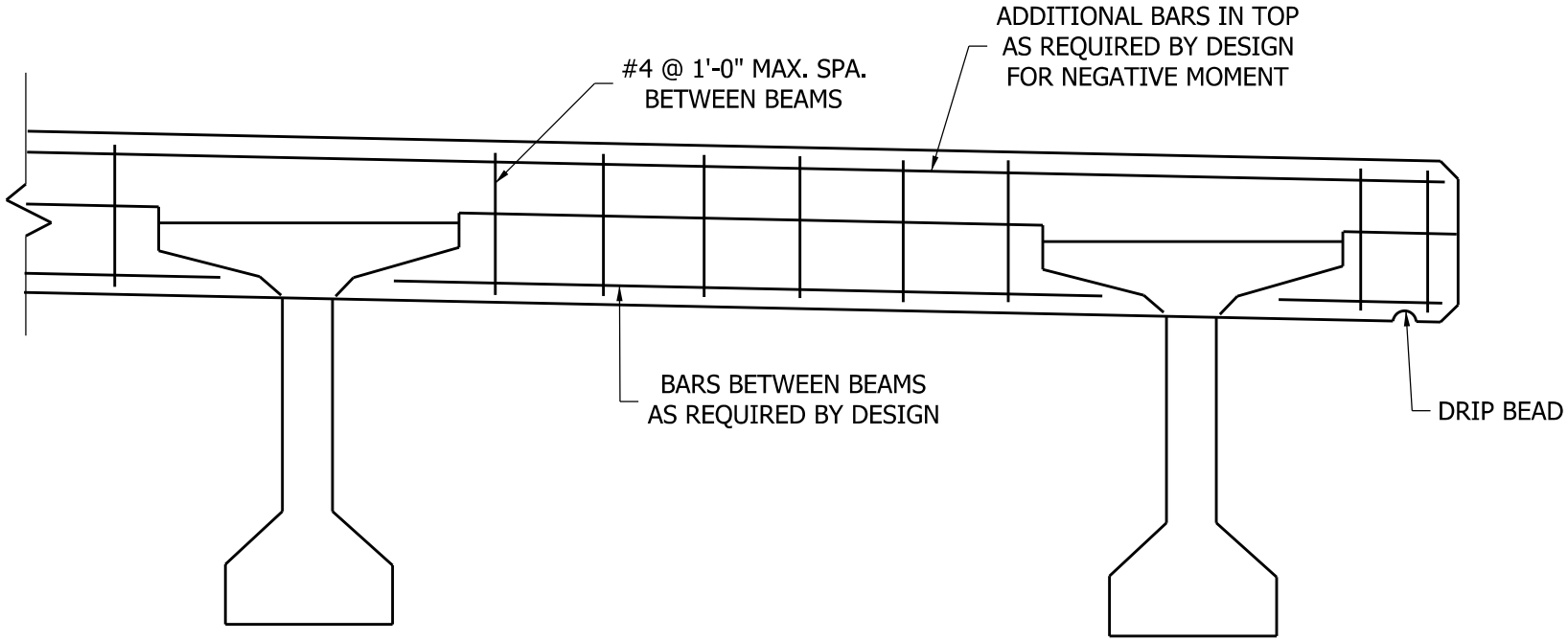

NOTE:
THE EDGE BEAM SHALL EXTEND
FROM COPING TO COPING.

SUGGESTED TRANSVERSE EDGE BEAM DETAILS
(For Bulb-Tee Beams)

Figure 404-3B
(Page 2 of 2)

Back

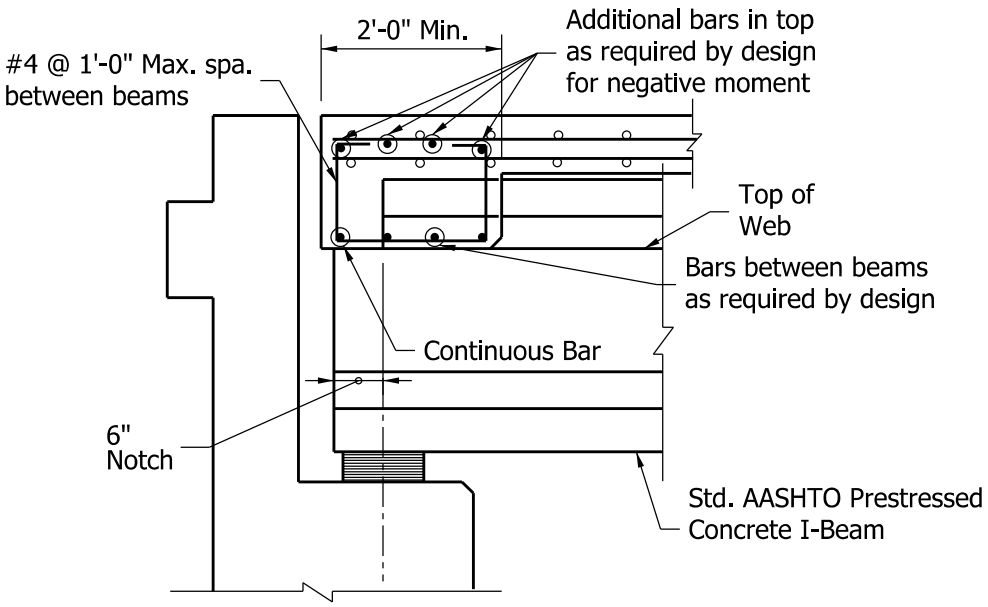

SKEW OVER 25°

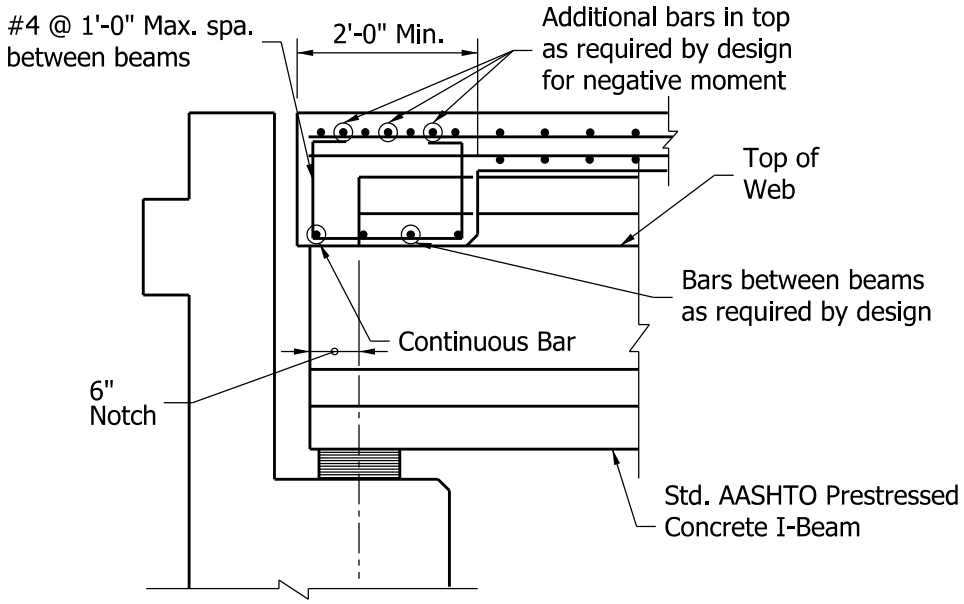

SKEW 25° OR LESS

NOTE: All reinforcing steel shall be epoxy coated.

SUGGESTED TRANSVERSE EDGE BEAM DETAILS (For AASHTO I-Beam)

Figure 404-3C
(Page 1 of 2)

Back

NOTE:	The edge beam shall extend from coping to coping.
NOTE:	All reinforcing steel shall be epoxy coated.

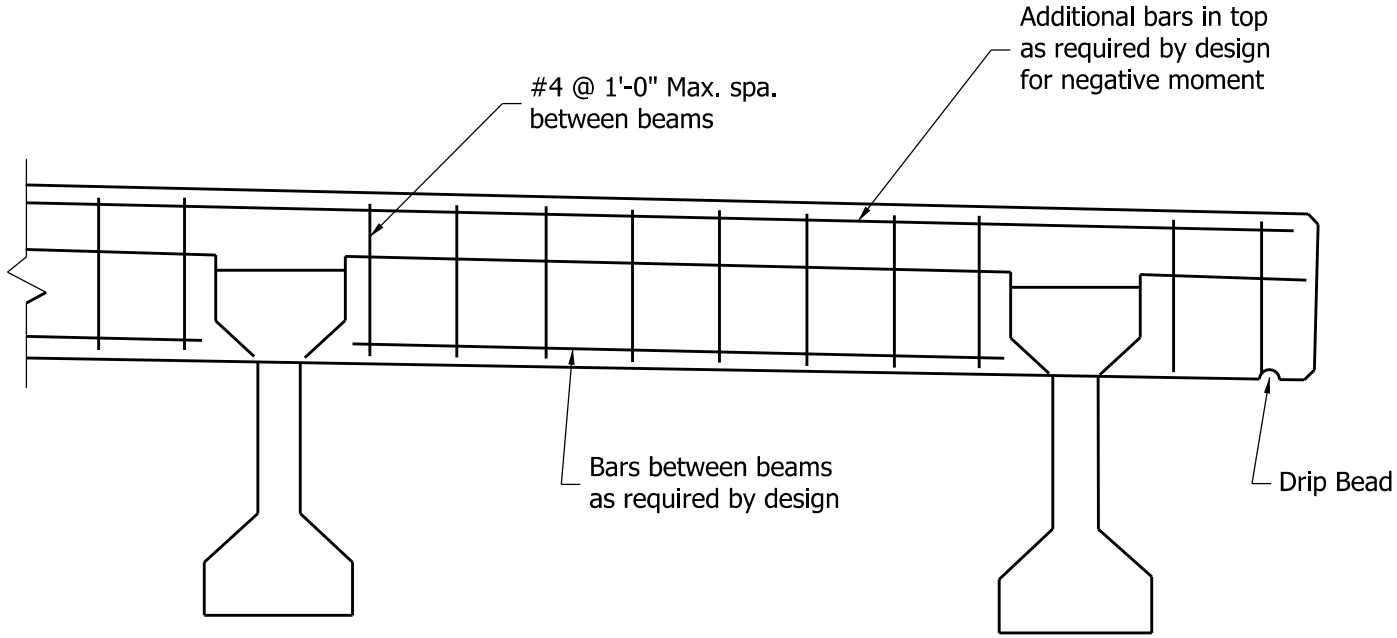

SUGGESTED TRANSVERSE EDGE BEAM DETAILS
(For AASHTO I-Beam)

Figure 404-3C
(Page 2 of 2)

Back

NOTE: All reinforcing steel shall be epoxy coated.

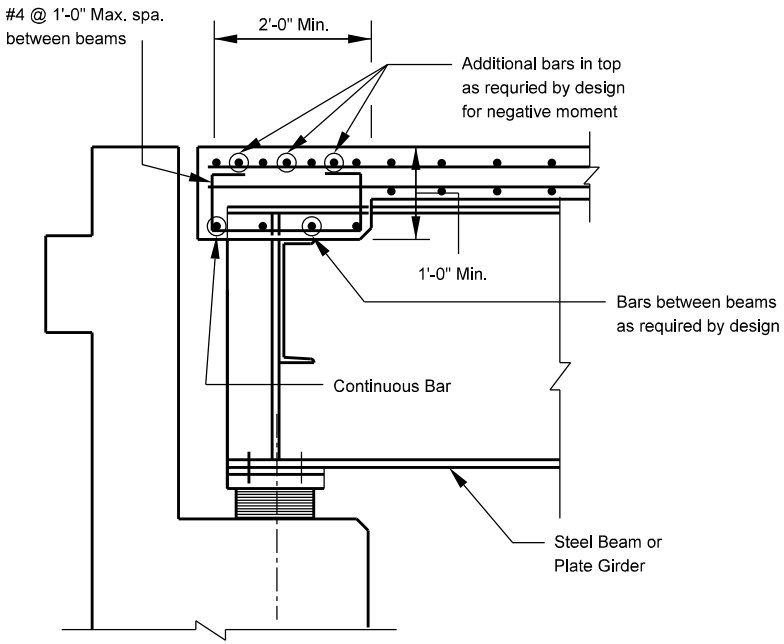

SKEW 25° OR LESS

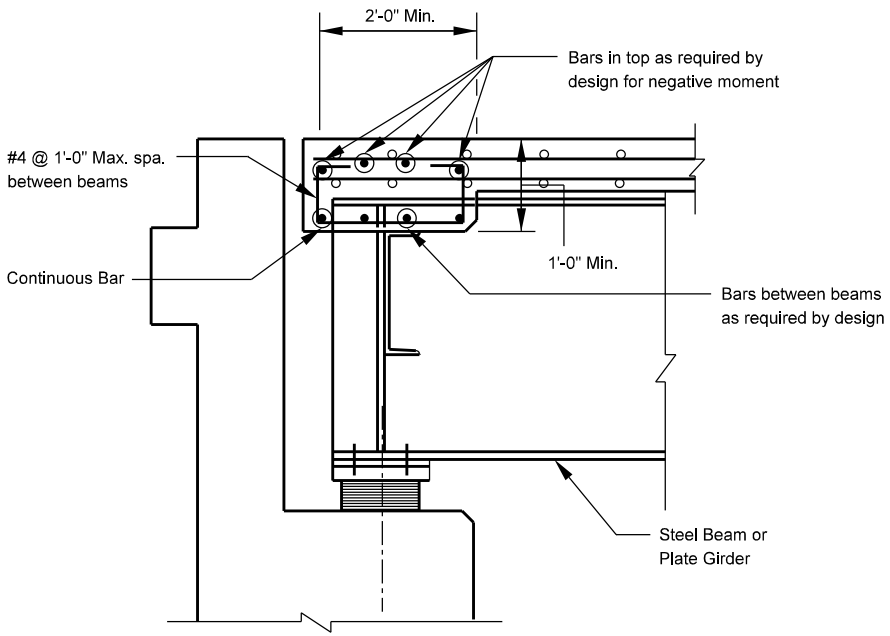

SKEW OVER 25°

SUGGESTED TRANSVERSE EDGE BEAM DETAILS
(For Steel Plate Girder)

Figure 404-3D
(Page 1 of 2)

Back

NOTE: All reinforcing steel shall be epoxy coated.

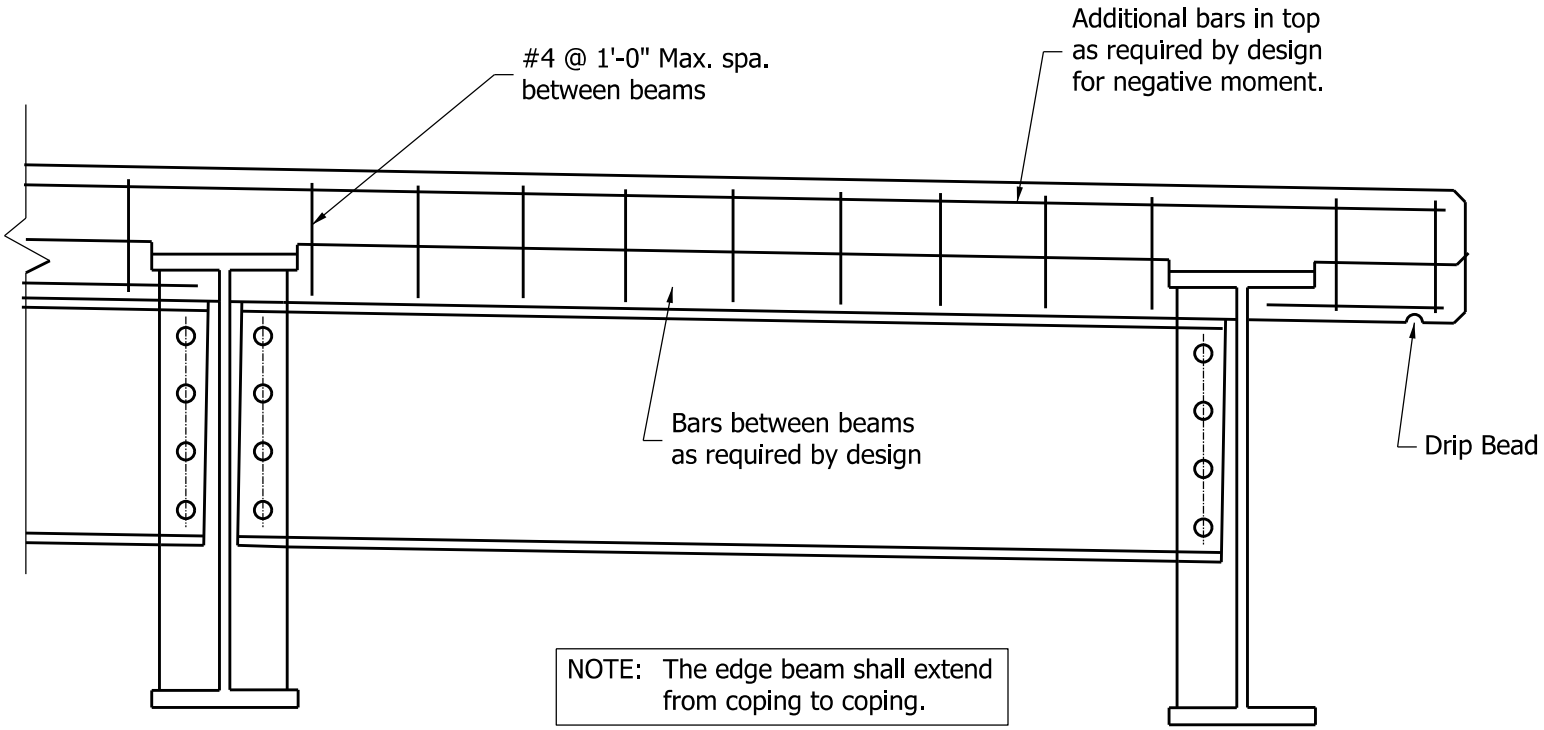

NOTE: The edge beam shall extend from coping to coping.

SUGGESTED TRANSVERSE EDGE BEAM DETAILS
(For Steel Plate Girder)

Figure 404-3D
(Page 2 of 2)

Back

NOTE: All reinforcing steel shall be epoxy coated.

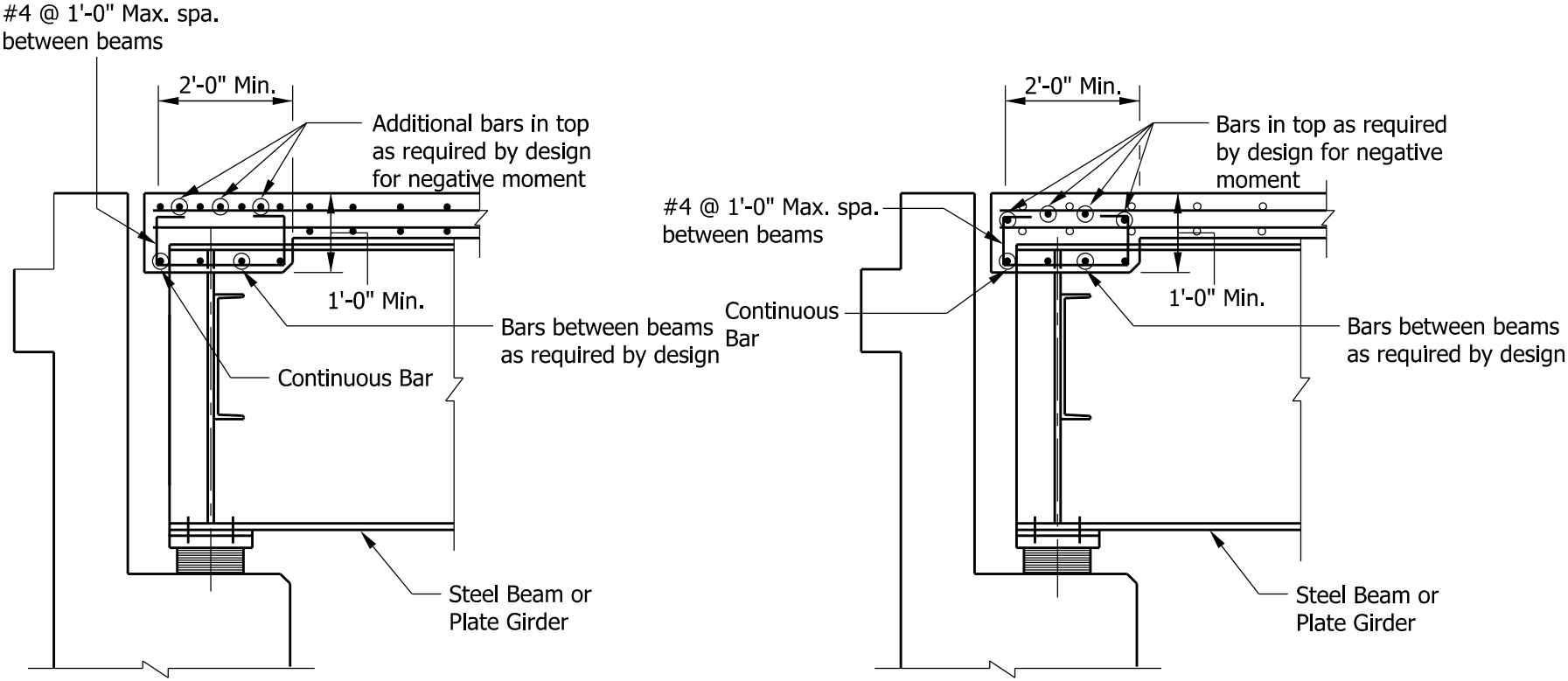

SKEW 25° OR LESS

SKEW OVER 25°

SUGGESTED ALTERNATE TRANSVERSE EDGE BEAM DETAILS
(For Steel Plate Girder)

Figure 404-3E

Back

NOTE: All reinforcing steel shall be epoxy coated.

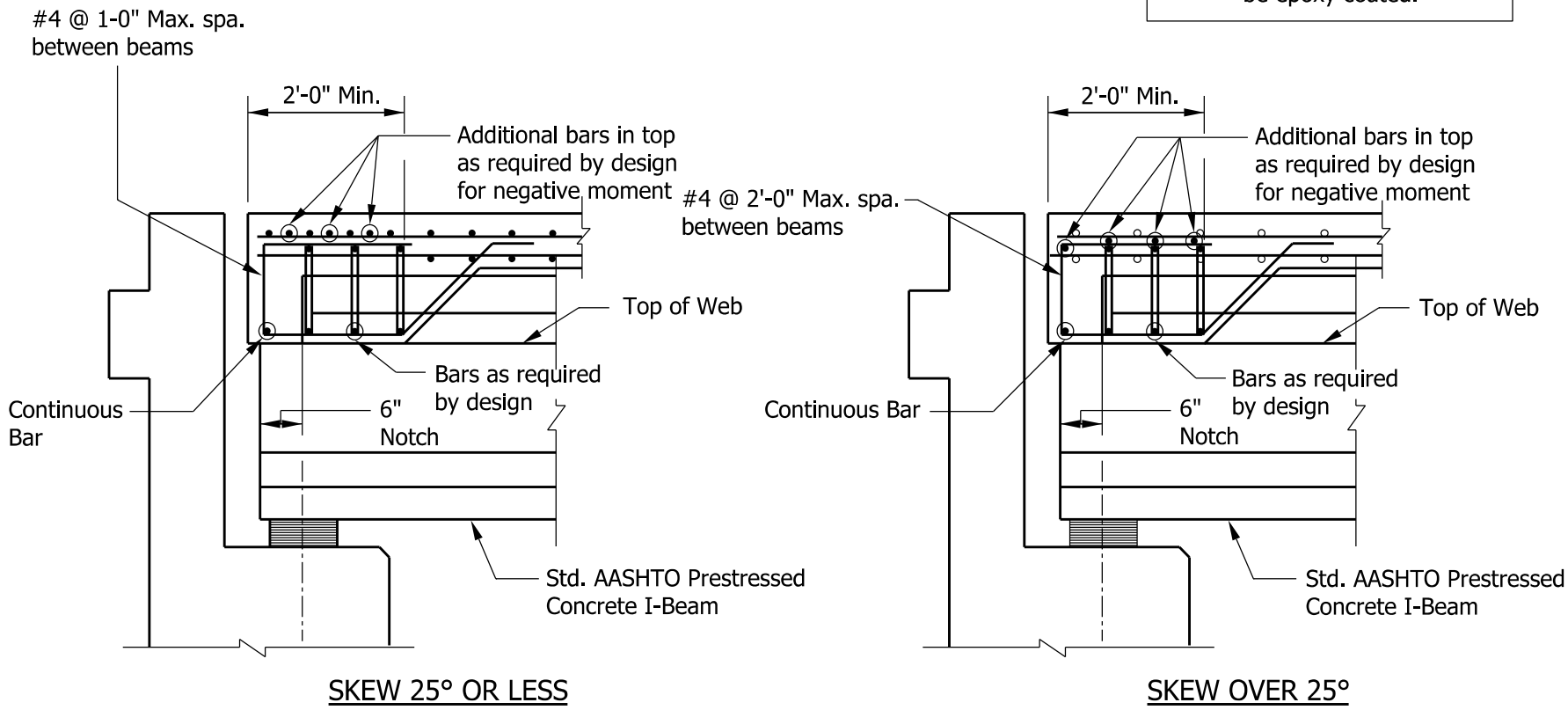

SUGGESTED ALTERNATE TRANSVERSE EDGE BEAM DETAILS
(For Bulb-Tee Beam, AASHTO I-Beam, and Steel Plate Girder)

Figure 404-3F
(Page 1 of 2)

Back

NOTE: All reinforcing steel shall be epoxy coated.

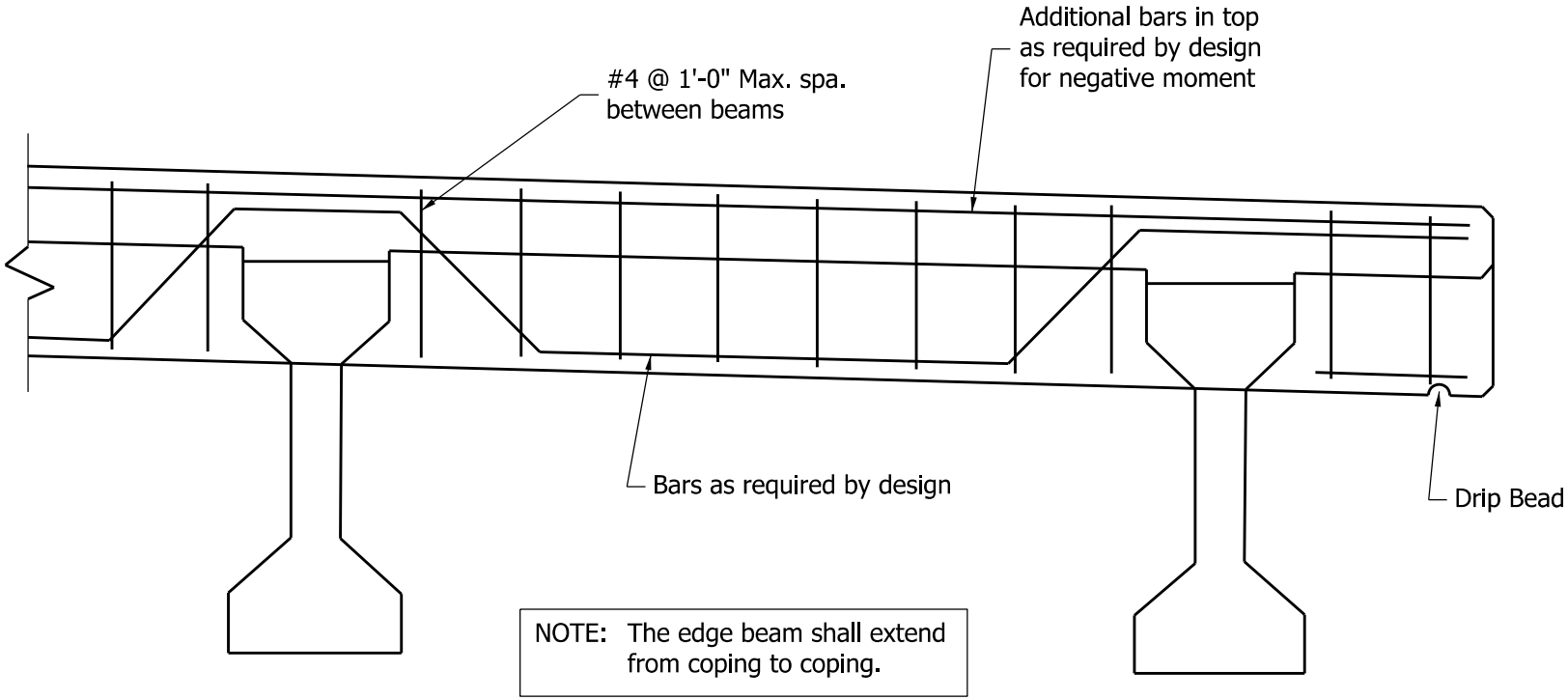

NOTE: The edge beam shall extend from coping to coping.

SUGGESTED ALTERNATE TRANSVERSE EDGE BEAM DETAILS
(For Bulb-Tee Beam, AASHTO I-Beam, or Steel Plate Girder)

Figure 404-3F
(Page 2 of 2)

Back

TESTING CRITERIA	ACCEPTANCE EQUIVALENCIES					
NCHRP *Report 350*	TL-1	TL-2	TL-3	TL-4	TL-5	TL-6
AASHTO *Guide Specifications for Bridge Railings*	---	PL-1	---	PL-2	PL-3	---

BRIDGE-RAILING LEVEL EQUIVALENCY

Figure 404-4A

Back

Railing Designation	TS-1 *	CF-1	PF-2	PS-2	TX **
Height Designation	Common	Common	Pedestrian	Pedestrian	Pedestrian
Mounting Location	On bridge coping	Flush with bridge deck	Flush with bridge deck	Atop sidewalk of minimum 5 ft width	Either atop sdwk. of 5 ft min. width, or flush with bridge deck
Railing Element	Thrie-beam with steel posts	2 steel tubes with steel posts on concrete curb	2 steel tubes with steel posts on concrete parapet	2 steel tubes with steel posts on concrete parapet	Concrete
Total Height	2’-9”	3’-0 3/4”	3’-6”	3’-6”	3’-6”
Br. Rlg. Standard Drawings	n/a	706-BRTM-01 and -02	706-BRPP-02, and -05, -06	706-BRPP-04 through -06	706-BRTX-01 through -04
Bridge Railing Transition	none	none	TPF-2	TPS-2	TTX
Br. Rlg. Trans. Standard Drawings	n/a	n/a	706-TTBP-03, -04, and -09	706-TTBP-07 through -09	706-TTTX-01 and -02
Guardrail Transition	TGS-1	TGT	TGB	TGB	TGB
Gdrl. Trans. Standard Drawings	n/a	601-TTGT-01 and -02	601-TTGB-01 through -05	601-TTGB-01 through -05	601-TTGB-01 through -05

* Bridge railing type **TS-1** may be used only on a local-public-agency collector or local road. Details for the bridge railing and transition are shown in INDOT Recurring Plan Detail 706-B-140d.

** Bridge railing type TX should be considered for an aesthetically-sensitive area.

BRIDGE-RAILING TYPES
TEST LEVEL 2

Figure 404-4B
(Page 1 of 3)

Back

Railing Designation	FC	TR ***	PS-1	PF-1
Height Designation	Common	Common	Pedestrian	Truck
Mounting Location	Flush with bridge deck	On existing concrete parapet	Atop sidewalk of minimum 5 ft width	Flush with bridge deck
Railing Element	Concrete, shape F	Thrie beam with steel posts	1 steel tube with steel posts on concrete parapet	1 steel tube with steel posts on concrete parapet
Total Height	2’-9”	2’-10”	3’-6”	3’-6”
Br. Rlg. Standard Drawings	706-BCBR-01, -03, and -04	706-TBRC-01, -02, -03; -TBRE-01; -TBRF-01, -02	706-BRPP-03, and -05, -06	706-BRPP-01, and -05, -06
Bridge Railing Transition	TBC	none	TPS-1	TPF-1
Br. Rlg. Trans. Standard Drawings	706-CBRT-01 through -03	n/a	706-TTBP-05 and -06	706-TTBP-01 and -02
Guardrail Transition	TGB	TGB	TGB	TGB
Gdrl. Trans. Standard Drawings	601-TTGB-01 through -05	601-TTGB-01 through -05	601-TTGB-01 through -05	601-TTGB-01 through -05

*** Bridge railing type TR should be used only to replace existing aluminum bridge railing where no other modifications to a bridge are to be made, either as a spot improvement or within the limits of a 3R or 4R project.

BRIDGE-RAILING TYPES
TEST LEVEL 4

Figure 404-4B
(Page 2 of 3)

Back

Railing Designation	FT	TF-2
Height Designation	Truck	Truck
Mounting Location	Flush with bridge deck	Flush with bridge deck
Railing Element	Concrete, shape F	2 steel tubes with steel posts on concrete parapet
Total Height	3’-9”	4’-2”
Br. Rlg. Standard Drawings	706-BCBR-02, -03, and -04	706-BRTF-01 through -10
Bridge Railing Transition	TBT	PBT
Br. Rlg. Trans. Standard Drawings	706-CBRT-01, through -03	706-TPBT-01 through -09
Guardrail Transition	TGB	TGB
Gdrl. Trans. Standard Drawings	601-TTGB-01 through -05	601-TTGB-01 through -05

BRIDGE-RAILING TYPES
TEST LEVEL 5

Figure 404-4B
(Page 3 of 3)

Back

Railing Desig-nation	Railing		Bridge-Railing Transition		Guardrail Transition	
	Pay Items	Pay Units	Pay Items	Pay Units	Pay Items	Pay Units
TS-1	Railing, TS-1	LFT	none	n/a	Guardrail Transition, TGS-1	EACH
CF-1	Railing, CF-1	LFT	none	n/a	Guardrail Transition, TGT	EACH
PF-2	Railing, Concrete, PF-2 Railing, Steel, PF-2 Reinforcing Steel, Epoxy Coated	LFT LFT LBS	Concrete Bridge Railing Transition, TPF-2	EACH	Guardrail Transition, TGB	EACH
PS-2	Railing, Concrete, PS-2 Railing, Steel, PS-2 Reinforcing Steel, Epoxy Coated	LFT LFT LBS	Concrete Bridge Railing Transition, TPS-2	EACH	Guardrail Transition, TGB	EACH
TX	Railing, TX Reinforcing Steel, Epoxy Coated	LFT LBS	Concrete Bridge Railing Transition, TTX	EACH	Guardrail Transition, TGB	EACH

Test Level 2 Railings

FC	Railing, Concrete, FC Reinforcing Steel, Epoxy Coated	LFT LBS	Concrete Bridge Railing Transition, TBC	EACH	Guardrail Transition, TGB	EACH
TR	Railing, TR	LFT	none	n/a	Guardrail Transition, TGB	EACH
PF-1	Railing, Concrete, PF-1 Railing, Steel, PF-1 Reinforcing Steel, Epoxy Coated	LFT LFT LBS	Concrete Bridge Railing Transition, TPF-1	EACH	Guardrail Transition, TGB	EACH
PS-1	Railing, Concrete, PS-1 Railing, Steel, PS-1 Reinforcing Steel, Epoxy Coated	LFT LFT LBS	Concrete Bridge Railing Transition, TPS-1	EACH	Guardrail Transition, TGB	EACH

Test Level 4 Railings

FT	Railing, Concrete, FT Reinforcing Steel, Epoxy Coated	LFT LBS	Concrete Bridge Railing Transition, TBT	EACH	Guardrail Transition, TGB	EACH
TF-2	Railing, Concrete, TF-2 Railing, Steel, TF-2 Reinforcing Steel, Epoxy Coated	LFT LFT LBS	Concrete Bridge Railing Transition, PBT	EACH	Guardrail Transition, TGB	EACH

Test Level 5 Railings

BRIDGE-RAILING PAY ITEMS

Figure 404-4C

Back

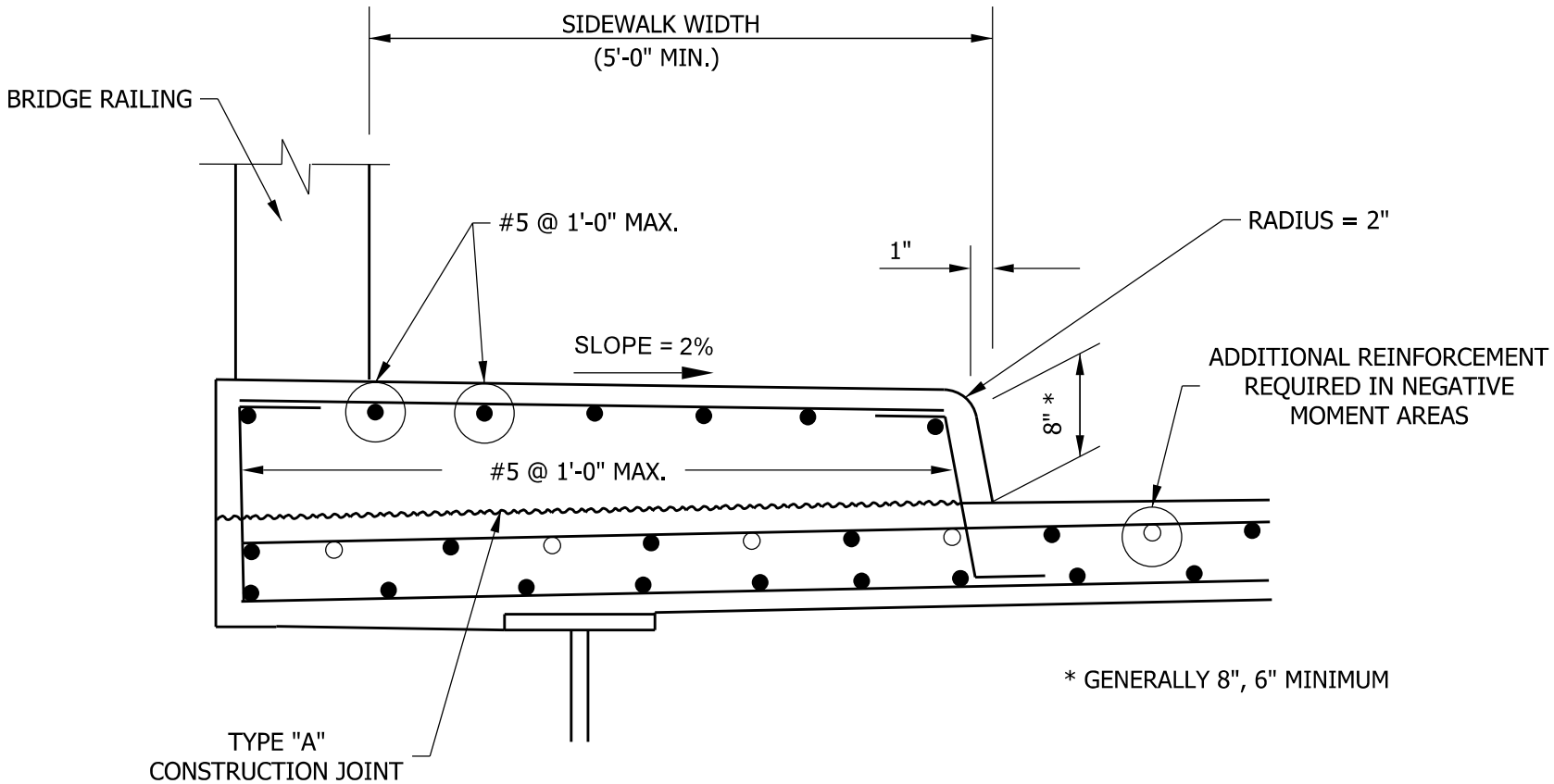

TYPICAL REINFORCEMENT IN BRIDGE SIDEWALK

Figure 404-4D

Back