PURPOSE:

The purpose of this drawing is to provide an overview of the project, including project data, design data, project location, and approval signatures.

PROJECT	DESIGNATION
9999999	9999999
CONTRACT	BRIDGE FILE
B-99999	057-14-000000

(1) Match Title Block Text Style

INDIANA DEPARTMENT OF TRANSPORTATION

Text Font = Tahoma (Typ. All Text)
Text Height = 0.50", Bold

STRUCTURE INFORMATION

STRUCTURE	TYPE	SPAN AND SKEW	OVER	STATION
057-14-000000	Continuous Composite Prestressed Concrete I-Beam Type II	3 Spans: 38'-0", 46'-0" & 38'-0" Skew: 20° Rt.	Veale Creek	1446+50 Line "A"

(2)

KIN PROJECT INFORMATION

DESIGNATION	PROJECT DESCRIPTION
0000000	TITLE OR BRIEF OF DESCRIPTION OF ASSOCIATED PROJECT
0000000	TITLE OR BRIEF OF DESCRIPTION OF ASSOCIATED PROJECT
0000000	TITLE OR BRIEF OF DESCRIPTION OF ASSOCIATED PROJECT

(14)

BRIDGE PLANS

Text Height = 0.70"

FOR SPANS OVER 20 FEET

Text Height = 0.37"

ROUTE: SR 57 AT: RP 45+94 (4) Text Height = 0.40"

PROJECT NO. 9999999 P.E.
9999999 R/W
9999999 CONST.

(3) Text Height = 0.46"

NO ADDITIONAL RIGHT-OF-WAY REQUIRED FOR THIS PROJECT

This note placed only when applicable.

Bridge Replacement on SR 57 over Veale Creek
Located 1.94 Miles South of US 50
Section 16, T-2-N, R-7-W, Washington Township, Daviess County

(5) A complete description of the location for the project must be shown. This is not the survey legal description. Location Description: 18 Pt Text

TRAFFIC DATA

A.A.D.T.	(2012)	4812 V.P.D.
A.A.D.T.	(2032)	6020 V.P.D.
D.H.V	(2032)	10 V.P.H.
DIRECTIONAL DISTRIBUTION		50%
TRUCKS		12% A.A.D.T.
		5% D.H.V.

Typ. All Tables on Title Sheet:
Table Title Text Height = 0.25"
Table Data: 12 Pt Text
(7)

DESIGN DATA

DESIGN SPEED	55 M.P.H.
PROJECT DESIGN CRITERIA	3R (NON-FREEWAY)
FUNCTIONAL CLASSIFICATION	STATE COLLECTOR
RURAL/URBAN	RURAL
TERRAIN	LEVEL
ACCESS CONTROL	NONE

Text Style: 14 Pt Text (8)

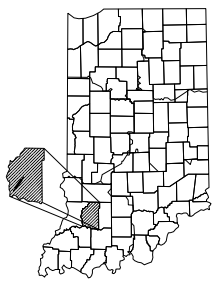

PROJECT LOCATION SHOWN BY
Daviess County

Text Style: 14 Pt Text (9)

LATITUDE: 38° 36' 16" LONGITUDE: 87° 11' 39"

Text Style: 14 Pt Text (10)

BRIDGE LENGTH:	0.023	MI.
ROADWAY LENGTH:	0.185	MI.
TOTAL LENGTH:	0.208	MI.
MAX. GRADE:	2.04	%

Show lengths to three decimal places. Do not round.

(11) HUC: 05120202090030

REQUIRED ELEMENTS:

1. Project Information Block (Upper Left and Lower Right Corners)
2. Structure Information Table
3. Project Numbers
4. Reference Post
5. Project Work Description
6. Project Location Map:
   - North Arrow and Scale
   - Begin and End Project Callouts
7. Traffic/Design Data Table
   - See IDM Fig 14-3C for acceptable values for Design Data Table
8. County Location Map
9. Latitude and Longitude
10. Project Length Table
    - Do not include length of S-lines
    - Do not include length of incidental construction
11. Hydrologic Unit Code (HUC 14) as required for permit applications
12. Standard Specification Reference
13. Signature Block and PE Seal
14. Kin Project Information Table (when applicable)
15. Owner and LPA Employee In Responsible Charge (ERC) signatures (LPA Projects Only)

(15)

Name, Title Date

Name, Title Date

Name, Employee In Responsible Charge Date

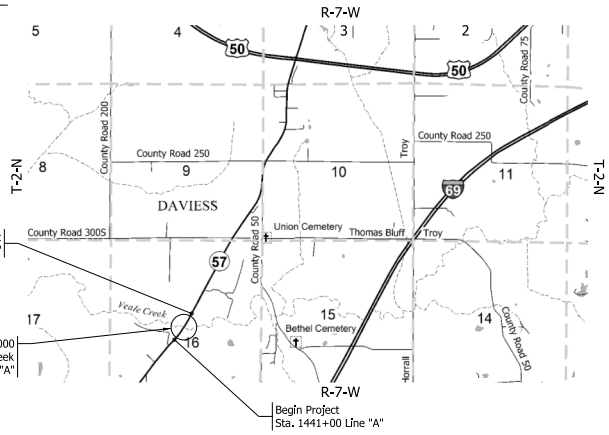

SCALE: 1" = 2000'

Typical Scales:
1" = 500'
1" = 1000'
1" = 2000'
1" = 4000'
1" = 5000'

(6) Location Map must be of sufficient enough scope and appropriate scale to clearly depict the relation of the project to the area in which it is being placed.
Location Map Text Callouts: 14 Pt Text
Location Map Labels: 12 Pt Text Mfn.
Section Labels: 18 Pt Text

INTENDED USE AND DISCLAIMER INFORMATION:

This set of sample plan sheets is provided for illustrative purposes only. The callouts and notes in this sample plan are intended only to show a need for a callout, level of specificity, and its expected appearance. INDOT makes no guarantee of the accuracy of data used for this hypothetical project although every attempt has been made to produce a reasonable design in accordance with the current *Indiana Design Manual*. The Designer must determine specific content of notes for his/her individual project. In the event of a conflict, the policies stated in the current *Indiana Design Manual* and *INDOT CAD Standards Manual* will govern.

(13)

Text Style: 14 Pt Text (12) INDIANA DEPARTMENT OF TRANSPORTATION STANDARD SPECIFICATIONS DATED 2014 TO BE USED WITH THESE PLANS.

Title Block Text:
Labels: 10 Pt Text
Signature: 12 Pt Text

PE SEAL

PLANS PREPARED BY: Engineer of Record 317-555-1234 PHONE NUMBER

CERTIFIED BY: SIG_DATE DATE

APPROVED FOR LETTING: INDIANA DEPARTMENT OF TRANSPORTATION DATE

BRIDGE FILE
057-14-000000
DESIGNATION
9999999

(1)

SHEET	
1 of 31	
CONTRACT	PROJECT
B-99999	9999999

Plot: 3/11/2014 9:51 AM

pw:\\dotwise.indot.in.gov:DOTWise\Documents\Standards\Working Drawings\Structural\WChles\Sample Plan Sheets\Bridge Project\0001250\Design\MS\Sht Title wc.dgn

PURPOSE:

The purpose of this Index sheet is to provide a listing of all sheets in the plans, utilities contact information, and a record of revisions to the plans.

2

UTILITIES

POWER:	WASHINGTON POWER & LIGHT 101 NORTHEAST 3RD ST. WASHINGTON, IN 47501 C/O BOB JONES (812) 254-2730	WATER:	DAVIESS COUNTY RURAL WATER P.O. BOX 129 WASHINGTON, IN 47501 C/O EARL ARMES (812) 254-4526
TELEPHONE:	SBC 24 E. HENDRICKS ST. SHELBYVILLE, IN 46176 C/O JAMES HAMMOND (800) 427-0497	GAS:	VECTREN 20 NORTHWEST 4TH ST. EVANSVILLE, IN 47708 C/O STEVE RAWLINSON (812) 491-4765

Typ. Table on Index Sheet:
Table Title Text Height: 0.25"
Table Data: 12 Pt Text

3

REVISIONS

SHEET NO.	DATE	REVISED

See IDM 14-3.07(02) for information regarding sequence of sheets when additional sheets are required for a project.

1

INDEX

SHEET NO.	DRAWING NO.	SUBJECT
1		TITLE
2		INDEX
3		TYPICAL CROSS SECTIONS
4		TEMPORARY RUNAROUND
5		PLAN AND PROFILE
6		SIGNING AND PAVEMENT MARKING DETAILS
7		SOIL BORINGS
8	C1	LAYOUT
9	C2	GENERAL PLAN
10-11	C3-C4	END BENT NO. 1 AND NO. 4 DETAILS
12-13	C5-C6	PIER NO. 2 AND NO. 3 DETAILS
14	C7	FRAMING PLAN
15-16	C8-C9	BEAM DETAILS
17-18	C10-C11	SUPERSTRUCTURE DETAILS
19	C12	RAILING DETAILS
20	C13	SCREEDS
21	C14	APPROACH SLAB DETAILS
22		BRIDGE SUMMARY
23		ROAD SUMMARY
24-31		CROSS SECTIONS

The sheets containing the structural details of the bridge are considered a drawing subset of the entire plan set and are assigned drawing numbers beginning with C (Concrete), S (Steel), or T (Timber) according to the bridge construction type. This format is optional, but recommended to reduce revisions associated with inserting sheets.

Note: Only two sheets of cross sections have been included in this sample plan set to illustrate format.

REQUIRED ELEMENTS:

1. Sheet Index
2. Utilities Information
   Name
   Address
   Contact Person
   Contact Phone No.
3. Revisions Block
4. Signature Block and PE Seal

4

Title Block Text:
Labels: 10 Pt Text
Signature: 12 Pt Text

PE SEAL

RECOMMENDED FOR APPROVAL *Engineer of Record* MM/DD/YY
DESIGN ENGINEER DATE

DESIGNED: ABC 03/2013 DRAWN: PQR 03/2013
CHECKED: BCD 04/2013 CHECKED: RST 04/2013

INDIANA
DEPARTMENT OF TRANSPORTATION

INDEX

SCALE	BRIDGE FILE
AS NOTED	057-14-000000
	DESIGNATION
	9999999
	SHEET
	2 of 31
CONTRACT	PROJECT
B-99999	9999999

Plot: 2/28/2014 3:46 PM

DOTWise\Documents\Standards\Working Drawings\Structural\WChiles\Sample Plan Sheets\Bridge Project\0001250\Design\MS\Sht Index wc.dgn

PURPOSE:

The purpose of this drawing is to show materials, details, and dimensions for roadway sections which vary from those included in the Standard Drawings.

NOTE: Neither clear zone nor obstruction-free zone should be shown when a barrier is present.

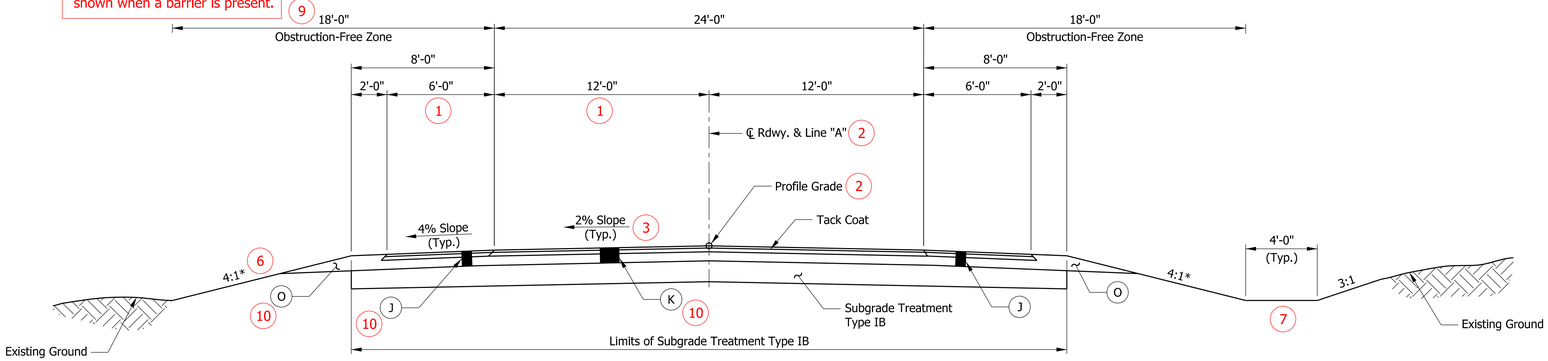

TYPICAL FILL SECTION

TYPICAL DITCH SECTION

* Except as shown on cross sections.

TYPICAL FULL DEPTH SECTION

Sta. 1441+00.00 to Sta. 1445+60.28
Sta. 1447+39.72 to Sta. 1452+00.00

Typ. All Sections:
Section Title: 18 Pt Text
Section Sub-Title: 14 Pt Text
Dimensions and Text Callouts: 12 Pt Text

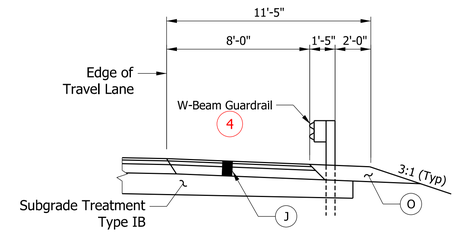

TYPICAL SECTION WITH GUARDRAIL

Sta. 1444+80.04 to Sta. 1445+55.04 Left
Sta. 1447+59.28 to Sta. 1449+96.78 Left
Sta. 1443+03.22 to Sta. 1445+40.72 Right
Sta. 1447+44.96 to Sta. 1448+19.96 Right

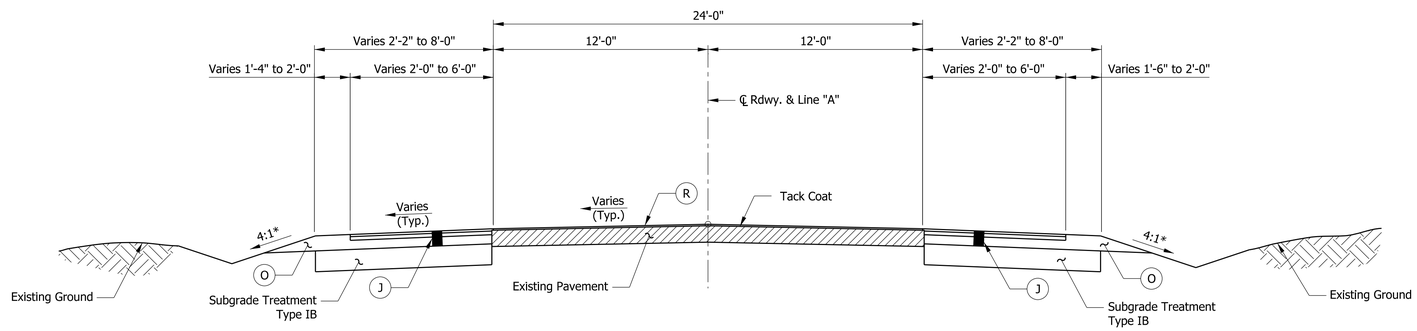

* Except as shown on cross sections.

TYPICAL INCIDENTAL SECTION

Sta. 1439+00 to Sta. 1441+00
Sta. 1452+00 to Sta. 1454+00

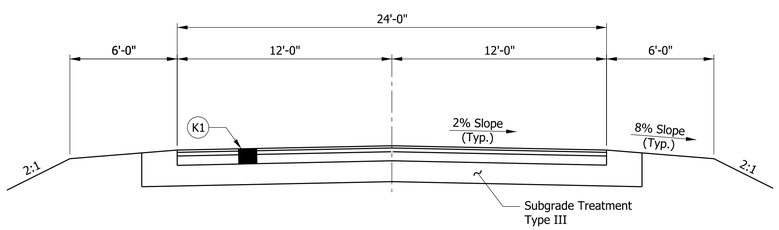

TYPICAL TEMPORARY RUNAROUND SECTION

11 LEGEND

- J — 165 lb/yd² QC/QA-HMA, 2, 64, Surface 9.5 mm on 330 lb/yd² QC/QA-HMA, 2, 64, Intermediate 19 mm on 6 in. of Compacted Aggregate Base No. 53
- K — 165 lb/yd² QC/QA-HMA, 3, 70, Surface 9.5 mm on 330 lb/yd² QC/QA-HMA, 3, 64, Intermediate 19 mm on 6 in. of Compacted Aggregate Base No. 53
- K1 — 165 lb/yd² HMA Surface, Type A on 275 lb/yd² HMA Intermediate, Type A on 6 in. of Compacted Aggregate Base No. 53
- O — Variable-Depth Compacted Aggregate Base No. 53
- R — 165 lb/yd² QC/QA-HMA, 2, 64, Surface 9.5 mm on Transition Milling

REQUIRED ELEMENTS:

1. Lane and Shoulder Widths
2. Profile Grade, Construction Centerline, paper Relocation Line, and Survey Line Locations
3. Cross Slopes
4. Curbs and Guardrails
5. Sidewalk Locations and Widths
6. Side Slopes
7. Ditches
8. Bicycle Facilities
9. Clear Zone (4R projects) or Obstruction-Free Zone (3R Projects)
10. Pavement Design
11. Legend See IDM Fig. 14-3A for Recommended Plans Legends
12. Signature Block and PE Seal

12

Title Block Text:
Labels: 10 Pt Text
Signature: 12 Pt Text

PE SEAL

RECOMMENDED FOR APPROVAL — Engineer of Record — DESIGN ENGINEER — MM/DD/YY DATE

DESIGNED: ABC 03/2013 | DRAWN: PQR 03/2013
CHECKED: BCD 04/2013 | CHECKED: RST 04/2013

INDIANA
DEPARTMENT OF TRANSPORTATION

TYPICAL CROSS SECTIONS

SCALE	BRIDGE FILE
1/4" = 1'-0"	057-14-000000
	DESIGNATION
	9999999
	SHEET
	3 of 31
CONTRACT	PROJECT
B-99999	9999999

Plot: 3/11/2014 8:34 AM

DOTWise\Documents\Standards\Working Drawings\Structural\WChiles\Sample Plan Sheets\Bridge Project\0001250\Design\MS\Sht Typical Cross Sections wc.dgn

PURPOSE:

The purpose of this Temporary Runaround sheet is to facilitate Engineering and Construction by providing topo, alignment data, R/W, and profile information for the temporary runaround alignment.

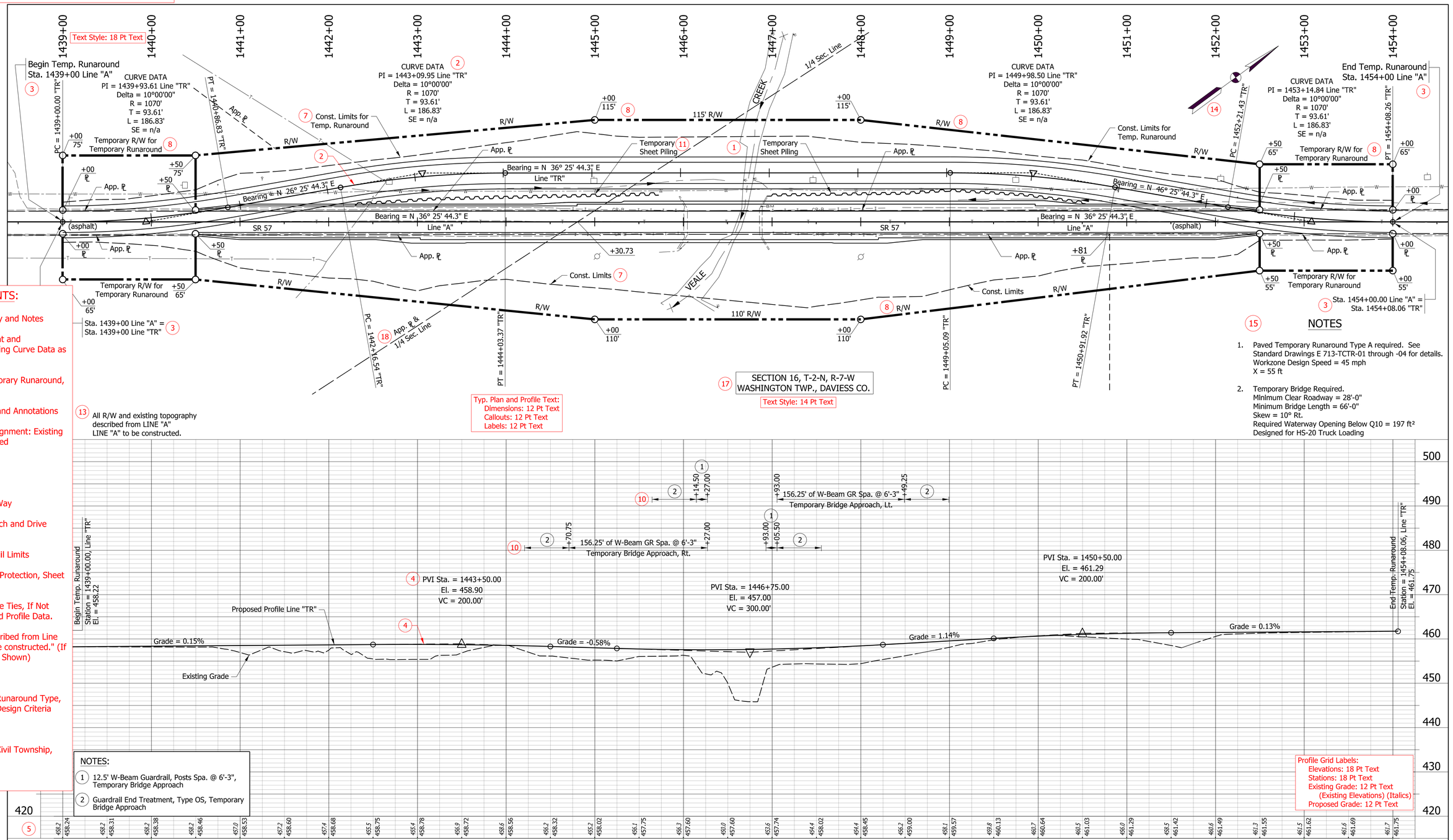

REQUIRED ELEMENTS:

1. Existing Topography and Notes
2. Horizontal Alignment and Annotations, Including Curve Data as Needed
3. Begin/End of Temporary Runaround, Station Equations
4. Vertical Alignment and Annotations
5. Elevations Along Alignment: Existing (Italics) and Proposed
6. Drainage Features
7. Construction Limits
8. Proposed Right of Way
9. Public Road Approach and Drive Locations
10. Barrier and Guardrail Limits
11. Temporary Erosion Protection, Sheet Piling
12. Alignment Reference Ties, If Not Identical to Plan and Profile Data.
13. Note: "All R/W described from Line ___. Line ___ to be constructed." (If Multiple Alignments Shown)
14. North Arrow
15. Notes, Temporary Runaround Type, Temporary Bridge Design Criteria
16. Sheet Scales
17. Township, Range, Civil Township, and County
18. Section Line

13 All R/W and existing topography described from LINE "A" LINE "A" to be constructed.

NOTES

1. Paved Temporary Runaround Type A required. See Standard Drawings E 713-TCTR-01 through -04 for details.
   Workzone Design Speed = 45 mph
   X = 55 ft
2. Temporary Bridge Required.
   Minimum Clear Roadway = 28'-0"
   Minimum Bridge Length = 66'-0"
   Skew = 10° Rt.
   Required Waterway Opening Below Q10 = 197 ft²
   Designed for HS-20 Truck Loading

NOTES:

1. 12.5' W-Beam Guardrail, Posts Spa. @ 6'-3", Temporary Bridge Approach
2. Guardrail End Treatment, Type OS, Temporary Bridge Approach

| | | |

PURPOSE:

The purpose of the Plan and Profile sheet is to facilitate Engineering and Construction by providing complete topo, alignment data, R/W, and profile information from beginning to end of Project.

REQUIRED ELEMENTS:

1. Existing Topography and Notes
2. Horizontal Alignment and Annotations, Including Curve Data as Needed
3. Begin/End of Project
4. Vertical Alignment and Annotations
5. Elevations Along Alignment: Existing (Italics) and Proposed
6. Drainage Features
7. Construction Limits
8. Proposed Right of Way
9. Public Road Approach and Drive Locations
10. Barrier and Guardrail Limits
11. Paving Limits
12. Permanent Erosion Protection
13. Alignment Reference Ties
14. Note: "All R/W described from Line ___. Line ___ to be constructed." (If multiple alignments shown.)
15. North Arrow
16. Sheet Scales
17. Existing Property Owners
18. Township, Range, Civil Township, and County
19. Section Line

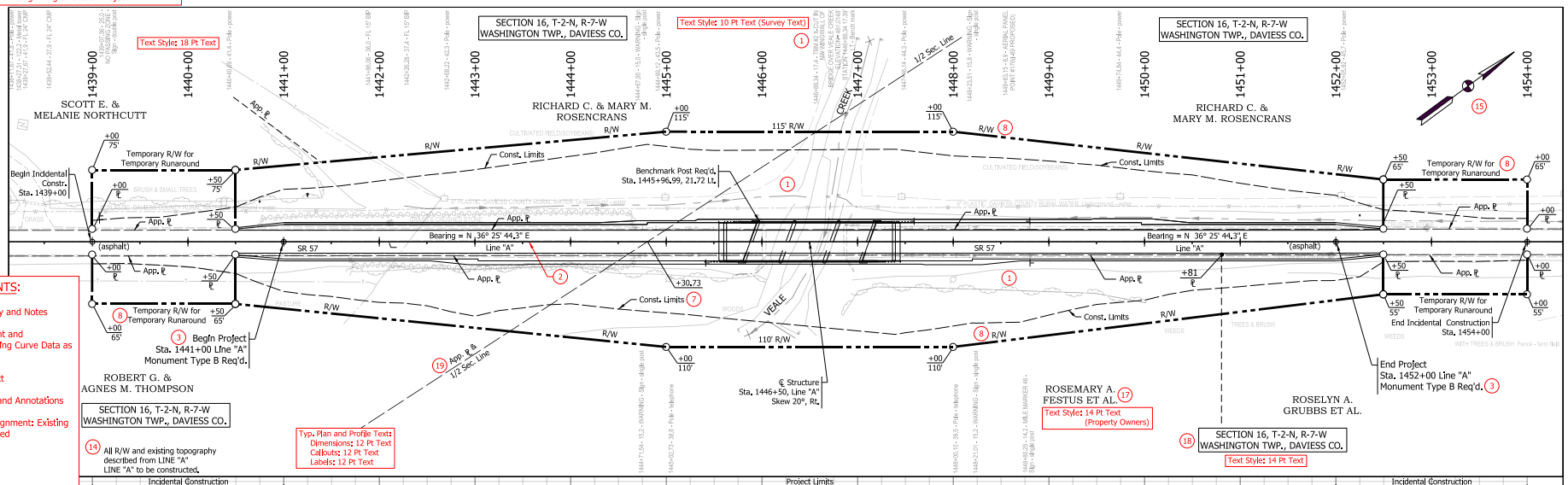

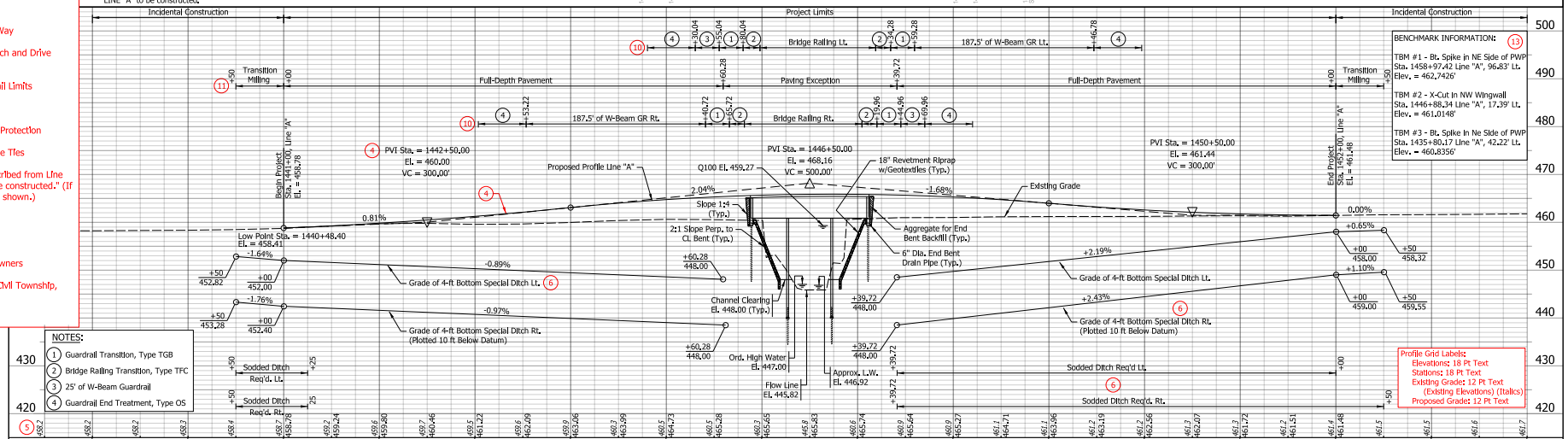

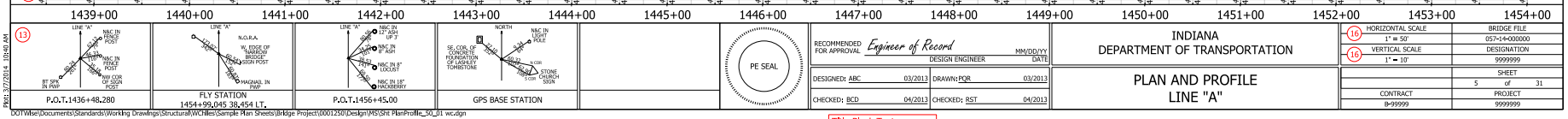

RECOMMENDED FOR APPROVAL *Engineer of Record* MM/DD/YY DESIGN ENGINEER DATE	INDIANA DEPARTMENT OF TRANSPORTATION	HORIZONTAL SCALE 1" = 50'	BRIDGE FILE 057-14-000000
		VERTICAL SCALE 1" = 10'	DESIGNATION 9999999
DESIGNED: ABC 03/2013 DRAWN: PQR 03/2013	PLAN AND PROFILE LINE "A"		SHEET 5 of 31
CHECKED: BCD 04/2013 CHECKED: RST 04/2013		CONTRACT B-99999	PROJECT 9999999

PE SEAL

Pkt: 3/7/2014 10:40 AM

DOTWise\Documents\Standards\Working Drawings\Structural\CHiles\Sample Plan Sheets\Bridge Project\0001250\Design\MS\Sht PlanProfile_50_01 wc.dgn

Reference Ties Text: Labels: 8 Pt Text Titles: 12 Pt Text

Title Block Text: Labels: 10 Pt Text Signature: 12 Pt Text

PURPOSE:

The purpose of this drawing is to show permanent signing and pavement markings required.

Text Style: 18 Pt Text

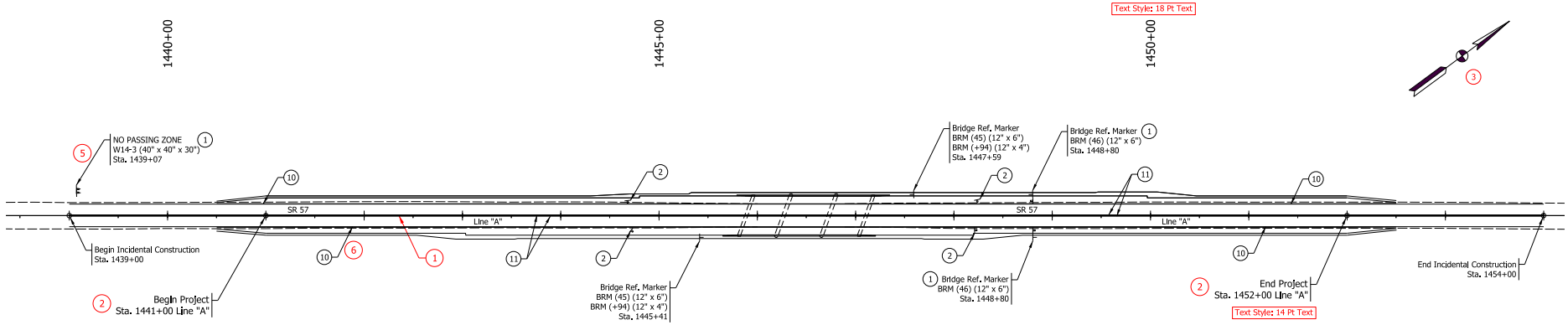

Text Style: 14 Pt Text

Typ. Plan Text:
Dimensions: 12 Pt Text
Callouts: 12 Pt Text
Labels: 12 Pt Text

Typ. Table:
Table Title: Text Height = 0.25"
Table Data: 12 Pt Text

7 SHEET SIGN & POST SUMMARY

SIGN															
PLAN SHEET NO. / LINE	SIGN LOCATION (STA.)	SIGN CODE	SIGN SIZE (IN x IN)	GROUND - MOUNTED SIGN AREA (ft^2)			MOUNTED ON PANEL SIGN, AREA (ft^2)	SQUARE							
								2 1/2" X 2 1/2" - 12 GA. (TYPE 3)			2" X 2" - 12 GA. (TYPE 2)			2 1/4" X 2 1/4" - 12 GA. (TYPE 1)	
								UNREINFORCED ANCHOR			REINFORCED ANCHOR			REINFORCED ANCHOR	
								POST LENGTH (FT.)			POST LENGTH (FT.)			POST LENGTH (FT.)	
				0.080"	0.100"	0.125"	0.080"	1	2	TOTAL	1	2	TOTAL	1	TOTAL
A	1439+07 LT	W14-3	48x48x36				3.85				12.0	12.0	24.0		
							3.85						24.0		

7 BRIDGE REFERENCE POST MARKER TABLE

RP/BRP/MP NO.	LOCATION	SIGN CODE	SIZE	POST LENGTH (FT.)	REFERENCE POST (EACH)
A	1445+41 RT	BRM(45)	12x6	6	1
	RT	BRM(+94)	12x4		
A	1447+59 LT	BRM(45)	12x6	6	1
	LT	BRM(+94)	12x4		
A	1448+80 RT	BRM(46)	12x6	6	1
A	1448+80 LT	BRM(46)	12x6	6	1
					4

9 LEGEND

1. Remove existing sign and supports and replace with new sign at same location.
2. Remove existing sign and do not reinstall new sign or supports.
10. Line, thermoplastic, solid, white, 4"
11. Line, thermoplastic, solid, yellow, 4"

8 PAVEMENT MARKINGS SUMMARY TABLE

LOCATION	LINE PAINT		LINE THERMOPLASTIC				LINE THERMOPLASTIC				TRANSVERSE MARKINGS THERMOPLASTIC STOP LINE		TRANSVERSE MARKINGS CROSSHATCH LINE		TRANSVERSE MARKINGS CROSSWALK LINE		PAVEMENT MESSAGE THERMOPLASTIC LANE INDICATION ARROW	PAVEMENT MESSAGE THERMOPLASTIC WORD "ONLY"	SNOWPLOWABLE RAISED PAVEMENT MARKERS
	SOLID WHITE 4 IN.	SOLID YELLOW 4 IN.	SOLID WHITE 4 IN.	SOLID YELLOW 4 IN.	SOLID WHITE 8 IN.	SOLID YELLOW 8 IN.	BROKEN WHITE 4 IN.	BROKEN YELLOW 4 IN.	BROKEN WHITE 8 IN.	BROKEN YELLOW 8 IN.	SOLID WHITE 12 IN.	SOLID WHITE 24 IN.	SOLID YELLOW 24 IN.	SOLID YELLOW 24 IN.	SOLID WHITE 4 IN.	SOLID WHITE 8 IN.			
	FT	FT	FT	FT	FT	FT	FT	FT	FT	FT	FT	FT	FT	FT	FT	FT	EACH	EACH	EACH
Sta. 1439+00 to Sta. 1454+00			2,600	2,600															
TOTALS			2,600	2,600															

REQUIRED ELEMENTS:

1. Horizontal Alignment
2. Begin/End of Project
3. North Arrow
4. Sheet Scale
5. Sign Callouts
6. Pavement Markings and Callouts
7. Sign and Post Summary Table (on separate sheet if large)
8. Pavement Marking Summary
9. Legend
10. Signature Block and PE Seal

Title Block Text:
Labels: 10 Pt Text
Signature: 12 Pt Text

PE SEAL

RECOMMENDED FOR APPROVAL *Engineer of Record* MM/DD/YY
DESIGN ENGINEER DATE

DESIGNED: ABC MM/YYYY DRAWN: PQR MM/YYYY

CHECKED: BCD MM/YYYY CHECKED: RST MM/YYYY

INDIANA
DEPARTMENT OF TRANSPORTATION

SIGNING AND PAVEMENT MARKING
LINE "A"

SCALE	BRIDGE FILE
1" = 50'	057-14-000000
	DESIGNATION
	9999999
	SHEET
	6 of 31
CONTRACT	PROJECT
B-99999	9999999

Plot: 3/6/2014 3:28 PM

DOTWise\Documents\Standards\Working Drawings\Structural\WChiles\Sample Plan Sheets\Bridge Project\0001250\Design\MS\Sht Signs Pvmt Markings_30_01 wc.dgn

PURPOSE:

The purpose of this Soil Borings sheet is to show the test borings plotted in the structure area. This drawing is used in determining the type of foundation and its associated allowable loads.

1

TEST BORING RECORD

CLIENT : Indiana Department of Transportation
PROJECT : Bridge Replacement Str. No.: 057-14-000000
BORING NO. : TB- 3
SHEET : 1 OF 4
ROUTE NO. : SR 57
COUNTY : Daviess
DATE STARTED : 10-13-10
LOCATION : SR 57 over Veale Creek, located 1.97 miles South of US 50
DATE COMPLETED : 10-13-10
DES NO. : 9999999
PROJECT NO. : 9999999
CTL PROJECT NO : 10050039IND
BORING ELEVATION : 460.9
STATION : 1447+13
OFFSET : 5.0 feet Lt
LINE : "A"
DEPTH : 82.0 feet
BORING METHOD : HSA
RIG TYPE : CME-550 ATV
CASING DIA. : 3.25" I.D.
CORE SIZE : 2" NQ
HAMMER : Automatic
DRILLER : ED
TEMPERATURE : 65° F
WEATHER : Cloudy
GROUNDWATER: Encountered at 22.0 feet At completion 23.0 feet 15.8 feet After 24 hours Caved in at 69.0 feet

Stratum Elevation	Sample Depth	SOIL/MATERIAL DESCRIPTION	Stratum Depth	Sample Number	SPT per 6"	SPT per 12" (N)	Recovery (%)	Moisture Content (%)	Total Unit Weight (pcf)	Unconfined Compression (ksf)	Atterberg Limits LL	PL	PI
460.4		ASPHALT CONCRETE (6") (Visual)	0.5										
	2.5	Brown and Gray, Moist, Medium Stiff to Soft, SILTY LOAM with Traces of Gravel (FILL) A-6, As Lab 1		SS-1	3 3 4	7	100	18.7					
456.9			4.0										
	5.0	Gray, Moist, Soft to Medium Stiff, SILT A-4, As Lab 2		SS-2	2 2 2	4	83	23.5					
	7.5			SS-3	3 4 4	8	100	23.6					
	10.0			SS-4	3 3 3	6	100	20.4	131.6	2.361 @ 5.4%			
448.9			12.0										
	12.5	Brown and Gray, Moist, Soft, SILTY LOAM A-6, As Lab 4											
	15.0			SS-5	2 2 3	5	100	27.5			33	18	14
	17.5												
442.4			18.5										
	20.0	Gray, Moist, Medium Stiff, SILT with Wet Sand Seam at 22 feet A-4, As Lab 2		SS-6	2 2 4	6	100	24.7					

Continued on next page

BORING METHOD: HSA . Hollow Stem Auger; SFA . Solid Flight Auger; RC . Rock Coring; MD . Mud Drilling; BS . Bag Sample; WD . Wash Drilling; HA . Hand Auger
SAMPLING METHOD: SS . Split Spoon Sample; ST . Shelby Tube Sample; CR . Rock Core Sample; BS . Bag Sample; AC . Auger Cuttings
ABBREVIATIONS: * . Hand Penetrometer; LL . Liquid Limit; PL . Plastic Limit; PI . Plasticity Index; SPT . Standard Penetration Test

INDOT_TEST BORING RECORD 10050039IND.GPJ INDOT_4.GDT

TEST BORING RECORD

CLIENT : Indiana Department of Transportation
PROJECT : Bridge Replacement Str. No.: 057-14-000000
BORING NO. : TB- 3
SHEET : 2 OF 4

Stratum Elevation	Sample Depth	SOIL/MATERIAL DESCRIPTION	Stratum Depth	Sample Number	SPT per 6"	SPT per 12" (N)	Recovery (%)	Moisture Content (%)	Total Unit Weight (pcf)	Unconfined Compression (ksf)	Atterberg Limits LL	PL	PI
		Gray, Moist, Medium Stiff, SILT with Wet Sand Seam at 22 feet A-4, As Lab 2											
438.9	22.5		22.0										
	25.0			SS-7	4 5 7	12	100	19.2			23	15	7
	27.5												
	30.0			SS-8	4 6 8	14	67	17.5					
	32.5	Gray, Moist, Stiff to Very Stiff, LOAM with Traces of Gravel; Traces of Coal Fragments at 30 feet and 38.5 feet (TILL) A-4 (3), Lab 5											
	35.0			SS-9	5 7 9	16	100	17.2	133.5	5.942 @ 15.0%			
	37.5												
	40.0			SS-10	4 8 11	19	100	17.7					
	42.5												
	45.0			SS-11	5 9 12	21	100	19.8	132.9	5.720 @ 15.0%			

Continued on next page

BORING METHOD: HSA . Hollow Stem Auger; SFA . Solid Flight Auger; RC . Rock Coring; MD . Mud Drilling; BS . Bag Sample; WD . Wash Drilling; HA . Hand Auger
SAMPLING METHOD: SS . Split Spoon Sample; ST . Shelby Tube Sample; CR . Rock Core Sample; BS . Bag Sample; AC . Auger Cuttings
ABBREVIATIONS: * . Hand Penetrometer; LL . Liquid Limit; PL . Plastic Limit; PI . Plasticity Index; SPT . Standard Penetration Test

INDOT_TEST BORING RECORD 10050039IND.GPJ INDOT_4.GDT

TEST BORING RECORD

CLIENT : Indiana Department of Transportation
PROJECT : Bridge Replacement Str. No.: 057-14-000000
BORING NO. : TB- 3
SHEET : 3 OF 4

Stratum Elevation	Sample Depth	SOIL/MATERIAL DESCRIPTION	Stratum Depth	Sample Number	SPT per 6"	SPT per 12" (N)	Recovery (%)	Moisture Content (%)	Total Unit Weight (pcf)	Unconfined Compression (ksf)	Atterberg Limits LL	PL	PI
	47.5	Gray, Moist, Stiff to Very Stiff, LOAM with Traces of Gravel; Traces of Coal Fragments at 30 feet and 38.5 feet (TILL) A-4 (3), Lab 5											
	50.0			SS-12	7 11 13	24	100	19.4					
408.9			52.0										
	52.5	Gray, Moist, Very Stiff to Hard, SILT with Traces of Cobbles and Boulders A-4, As Lab 2											
	55.0			SS-13	7 9 11	20	100	23.1	132.7	3.243 @ 15.0%			
	57.5												
	60.0			SS-14	8 14 18	32	22	20.8					
	62.5												
	65.0			SS-15	16 25 34	59	11						
	67.5												
391.9			69.0										
	70.0	Brown and Gray, Decomposed, Very Soft, SHALE (Visual)		SS-16	12 17 22	39	83						

Continued on next page

BORING METHOD: HSA . Hollow Stem Auger; SFA . Solid Flight Auger; RC . Rock Coring; MD . Mud Drilling; BS . Bag Sample; WD . Wash Drilling; HA . Hand Auger
SAMPLING METHOD: SS . Split Spoon Sample; ST . Shelby Tube Sample; CR . Rock Core Sample; BS . Bag Sample; AC . Auger Cuttings
ABBREVIATIONS: * . Hand Penetrometer; LL . Liquid Limit; PL . Plastic Limit; PI . Plasticity Index; SPT . Standard Penetration Test

INDOT_TEST BORING RECORD 10050039IND.GPJ INDOT_4.GDT

TEST BORING RECORD

CLIENT : Indiana Department of Transportation
PROJECT : Bridge Replacement Str. No.: 057-14-000000
BORING NO. : TB- 3
SHEET : 4 OF 4

Stratum Elevation	Sample Depth	SOIL/MATERIAL DESCRIPTION	Stratum Depth	Sample Number	SPT per 6"	SPT per 12" (N)	Recovery (%)	Moisture Content (%)	Total Unit Weight (pcf)	Unconfined Compression (ksf)	Atterberg Limits LL	PL	PI
		Brown and Gray, Decomposed, Very Soft, SHALE (Visual)											
387.9	72.5		73.0										
	75.0	Gray, Highly Weathered, Soft, SHALE with Traces of Coal (Visual)		SS-17	30 50/5"		100						
383.9	77.5		77.0										
		Gray, Highly Weathered, Soft, SHALE											
381.9	80.0		79.0	RC-1 RQD= 60%			72						
		Gray, Moderately Weathered, Hard, LIMESTONE											
378.9	82.5		82.0										
		Bottom of Boring at 82.0 feet											
	85.0	Two attempts on SS-14 and SS-15 due to low soil recovery. Boring backfilled with soil cuttings. Pavement restored with concrete patch.											
	87.5												
	90.0												
	92.5												
	95.0												

BORING METHOD: HSA . Hollow Stem Auger; SFA . Solid Flight Auger; RC . Rock Coring; MD . Mud Drilling; BS . Bag Sample; WD . Wash Drilling; HA . Hand Auger
SAMPLING METHOD: SS . Split Spoon Sample; ST . Shelby Tube Sample; CR . Rock Core Sample; BS . Bag Sample; AC . Auger Cuttings
ABBREVIATIONS: * . Hand Penetrometer; LL . Liquid Limit; PL . Plastic Limit; PI . Plasticity Index; SPT . Standard Penetration Test

INDOT_TEST BORING RECORD 10050039IND.GPJ INDOT_4.GDT

Typ. Test Boring Record:
Text in Table: 10 Pt Text Min.

Note: Reports for TB - 1 and TB - 2 are not shown in this sample, but would be included in a full set of plans.

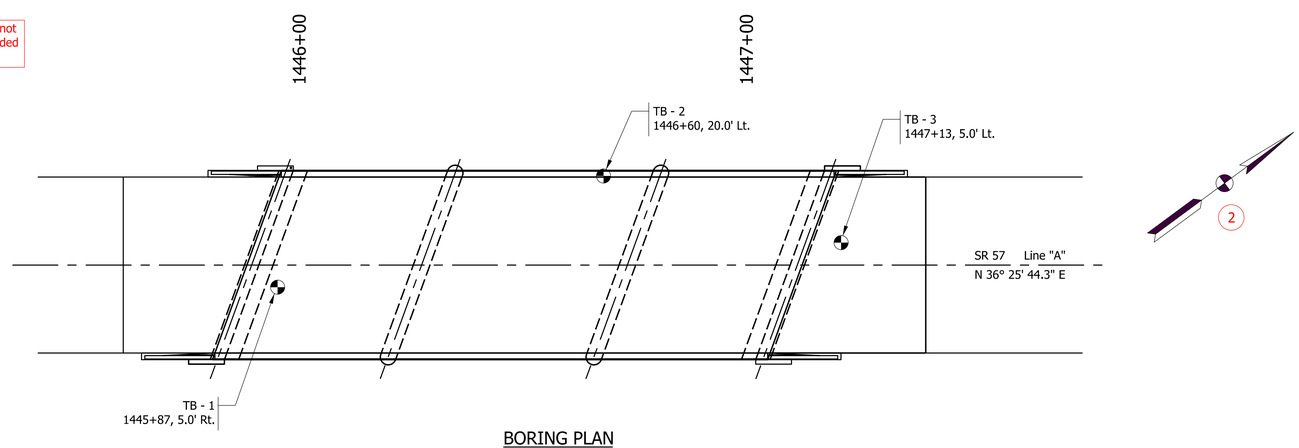

BORING PLAN
2 Scale: 1/16" = 1'-0"

Typ. Boring Plan:
Section Title, Stations: 18 Pt Text
Section Sub-Title: 14 Pt Text
Text Callouts: 12 Pt Text

3

PILE LOADING FOR GEOTECHNICAL TESTING

	Bent No. 1	Pier No. 2	Pier No. 3	Bent No. 4
Pile Size, Type, and Grade	HP 12 x 53 Grade 50 ksi	HP 12 x 74 Grade 50 ksi	HP 12 x 74 Grade 50 ksi	HP 12 x 53 Grade 50 ksi
Factored Design Load, Qf (kip)	160	270	270	160
Factored Design Soil Resistance, Rr (kip)	160	270	270	160
Resistance Factor	0.7	0.7	0.7	0.7
Downdrag Load, DD (kip), Due to Embankment Fill	62	0	0	62
Downdrag Load, D (kip), Due to Liquefaction	46	22	22	46
Nominal Soil Resistance, Rn (kip)	353	430	430	353
Downdrag Friction, Rs (kip)	62	22	22	62
Scour Zone Friction, Rn (kip)	0	0	0	0
Relaxation of Tip in Shale (kip)	50	100	100	50
Nominal Driving Resistance, Rndr (kip)	465	552	552	465
Estimated Pile Tip Elevation (Minimum)	378	375	375	378
Testing Method	PDA - ISS 701.05(b)			

Typ. Table:
Table Title: 18 Pt Text
Table Data: 12 Pt Text

4

NOTE

1. N indicates the number of blows required to drive a 1⅜" I.D, 1" O.D. Split-Spoon Sampler 6" by means of a 140-lb weight falling 30".

REQUIRED ELEMENTS:

1. Boring Logs (Bridge Borings Only)
2. Boring Plan and North Arrow
3. Soil and Foundation Design Data, Table of Pile Loading for Geotechnical Testing
4. Notes
5. Signature Block and PE Seal

5

Title Block Text:
Labels: 10 Pt Text
Signature: 12 Pt Text

PE SEAL

RECOMMENDED FOR APPROVAL Engineer of Record MM/DD/YY
DESIGN ENGINEER DATE
DESIGNED: ABC 03/2013 DRAWN: PQR 03/2013
CHECKED: BCD 04/2013 CHECKED: RST 04/2013

INDIANA
DEPARTMENT OF TRANSPORTATION

SOIL BORINGS

SCALE	BRIDGE FILE
AS NOTED	057-14-000000
	DESIGNATION
	9999999
	SHEET
	7 of 31
CONTRACT	PROJECT
B-99999	9999999

Plot: 2/28/2014 3:58 PM

DOTWise\Documents\Standards\Working Drawings\Structural\WChiles\Sample Plan Sheets\Bridge Project\0001250\Design\MS\Sht Borings TB_03 wc.dgn

PURPOSE:

The purpose of the Layout sheet is to show the bridge construction details in relationship to the existing topography, and property owners, as well as hydraulic data and earthwork estimates.

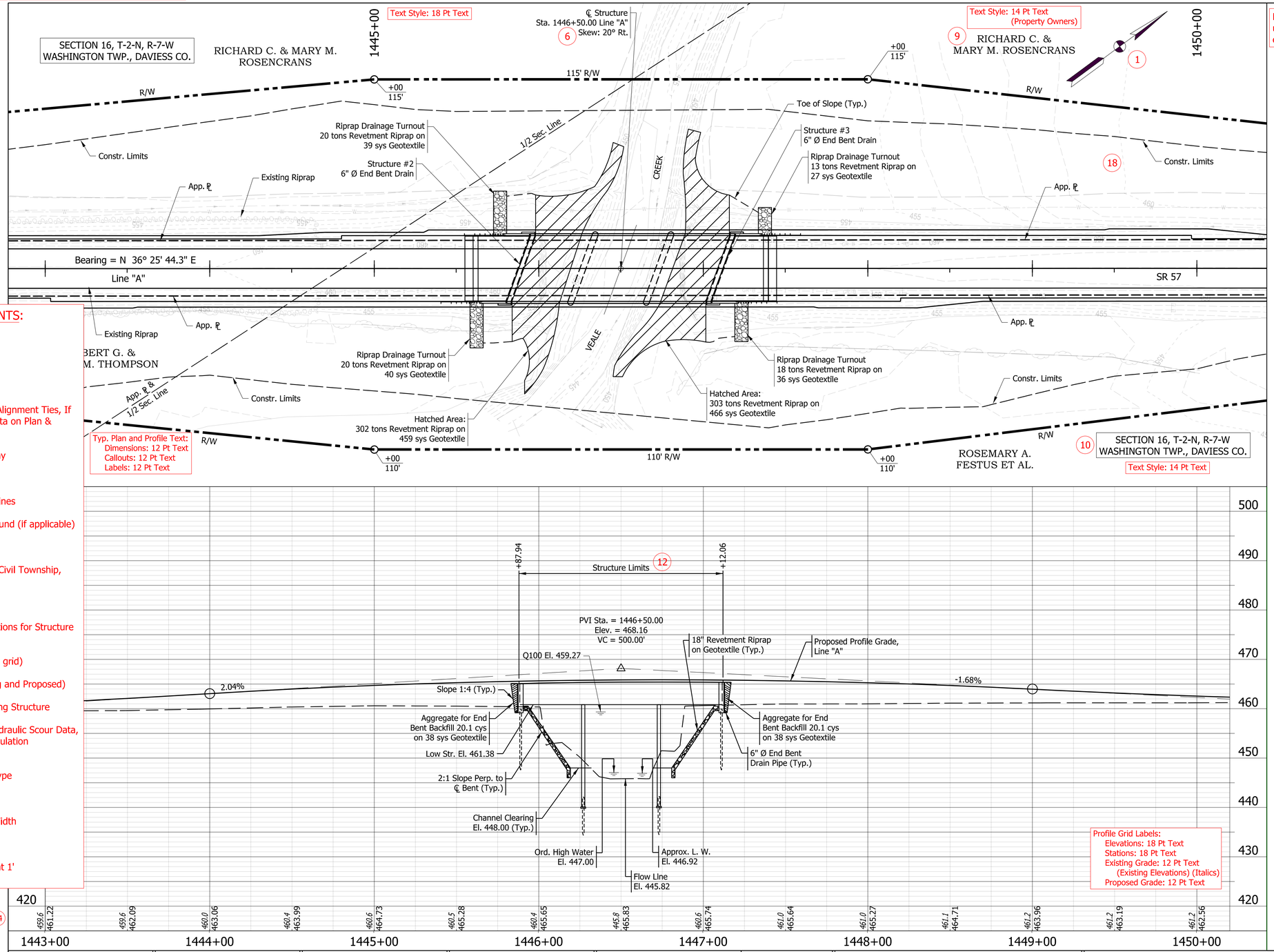

North Arrow to be shown in upper right hand corner of every plan, if possible.

15 EXISTING STRUCTURE

The existing structure is a single span steel-pony truss bridge built in 1938 with an 84' span and 24' clear roadway reinforced concrete deck with wingwalls. Existing structure to be removed.

16 HYDRAULIC DATA

Waterway Opening Required	926.62	sq ft
Waterway Opening Provided	967.00	sq ft
Drainage Area	20.9	sq mi
Design Discharge, Q100	3000	cfs
Velocity	3.43	ft/s
Q100 Elev.	459.27	ft
Estimated Scour Elev.	429.38	ft
Backwater at Q100	0.13	ft
Existing Waterway Opening	889.71	sq ft
Existing Backwater	0.15	ft
Low Structure Elev.	461.27	ft
Existing Low Structure Elev.	457.11	ft

16 HYDRAULIC SCOUR DATA

Q100 Discharge	=	3000.0	cfs
Q100 Elev.	=	459.27	ft
Velocity at Q100	=	5.59	ft/sec
Scour Depth (Contraction)	=	4.42	ft
Scour Depth (Total)	=	10.28	ft
Low Scour Elev.	=	435.54	ft
Q500 Discharge	=	5000.0	cfs
Q500 Elev.	=	462.12	ft
Velocity at Q500	=	5.03	ft/sec
Scour Depth (Contraction)	=	7.86	ft
Scour Depth (Total)	=	16.44	ft
Low Scour Elev.	=	429.38	ft

16 EARTHWORK TABULATION

Fill + 20%	9638	cys
Common Excavation	5952	cys
Usable Waterway Excavation (70%)	238	cys
Surplus Foundation Excavation (70%)	68	cys
Borrow	3380	cys
Total Waterway Excavation	340	cys
Excavation Unclassified	97	cys
Benching (Estimated)	1908	cys

No direct payment for Benching. Benching will not be paid for as Common Excavation.

Typ. All Notes Blocks:
Titles: 18 Pt Text
Section Headings: 14 Pt Text
Notes Body: 12 Pt Text

REQUIRED ELEMENTS:

1. North Arrow
2. Sheet Scales
3. Line Designation
4. Reference Points, Alignment Ties, If Not Identical to Data on Plan & Profile Sheet
5. Existing Topography
6. Skew Angle
7. Existing Property Lines
8. Temporary Runaround (if applicable)
9. Property Owners
10. Township, Range, Civil Township, and County
11. Profile Grade Data
12. Begin and End Stations for Structure Limits
13. Stations (on profile grid)
14. Elevations (Existing and Proposed)
15. Indication of Existing Structure
16. Hydraulic Data, Hydraulic Scour Data, and Earthwork Tabulation
17. Project Title
    - Superstructure Type
    - No. of Spans
    - Span Lengths
    - Skew
    - Clear Roadway Width
    - Route/Crossing
    - County
18. Existing Contours at 1' with Labels at 5'

Text Style: 18 Pt Text

17 PRESTRESSED CONCRETE I-BEAM TYPE II BRIDGE
3 SPANS: 38'-0", 46'-0", 38'-0"
39'-4" CLEAR ROADWAY; 20° SKEW RT.
SR 57 OVER VEALE CREEK
DAVIESS COUNTY

4

PE SEAL

RECOMMENDED FOR APPROVAL *Engineer of Record* MM/DD/YY
DESIGN ENGINEER DATE

DESIGNED: ABC 03/2013 DRAWN: PQR 03/2013
CHECKED: BCD 04/2013 CHECKED: RST 04/2013

INDIANA
DEPARTMENT OF TRANSPORTATION

LAYOUT

2 HORIZONTAL SCALE 1" = 30'	BRIDGE FILE 057-14-000000
2 VERTICAL SCALE 1" = 10'	DESIGNATION 9999999
DRAWING C1 of C14	SHEET 8 of 31
CONTRACT B-99999	PROJECT 9999999

Plot: 3/4/2014 4:28 PM

DOTWise\Documents\Standards\Working Drawings\Structural\WChiles\Sample Plan Sheets\Bridge Project\0001250\Design\MS\Sht Layout_30 wc.dgn

Reference Ties Text:
Labels: 8 Pt Text
Titles: 12 Pt Text

Title Block Text:
Labels: 10 Pt Text
Signature: 12 Pt Text

PURPOSE:

The purpose of the General Plan is to show necessary information to proceed with the final detail drawings.

REQUIRED ELEMENTS:

1. North Arrow
2. Plan
   - Lane/Shoulder Configuration
3. Elevation
   - Pile Size and Type
   - Substructure Fixity
   - Low Structure El.
4. Section Perpendicular to CL of Structure
5. General Notes
6. Design Data
7. Construction Loading Data
8. Title
   - Superstructure Type
   - No. of Spans
   - Span Lengths
   - Skew
   - Clear Roadway Width
   - Route/Crossing
   - County
9. Line Designation
10. Clearances
    - Low Structure Elevation for Waterway Crossing
    - Min. Clearance (Vertical and Horizontal) and Point of Mininum Clearance in Plan View for Street or Railroad Crossing
11. Signature Block and PE Seal

STRUCTURE TO BE BUILT ON A 500' VERTICAL CURVE

Text Style: 18 Pt Text

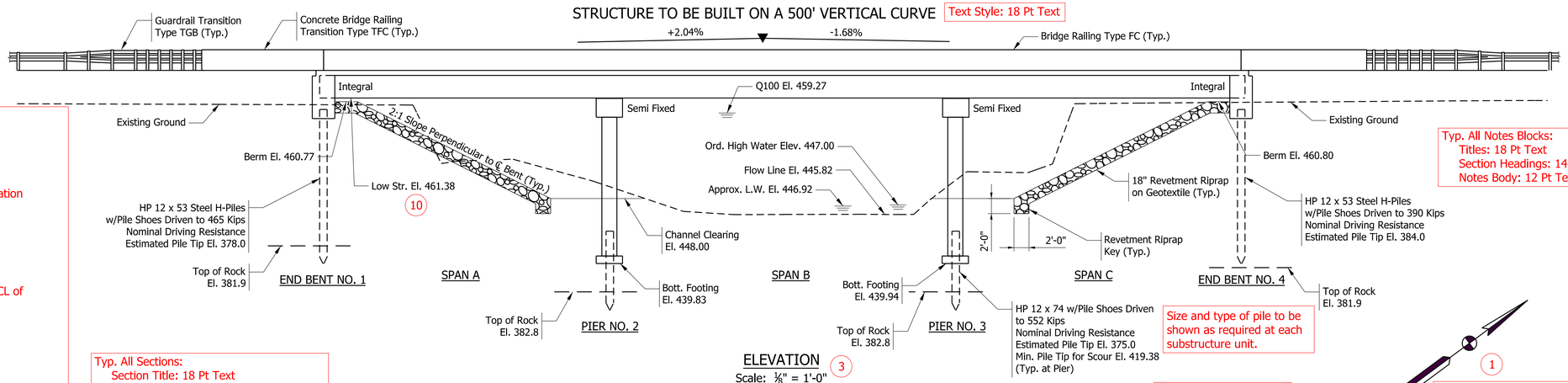

Typ. All Notes Blocks:
Titles: 18 Pt Text
Section Headings: 14 Pt Text
Notes Body: 12 Pt Text

Size and type of pile to be shown as required at each substructure unit.

ELEVATION
Scale: ⅛" = 1'-0" (3)

Typ. All Sections:
Section Title: 18 Pt Text
Section Sub-Title: 14 Pt Text
Dimensions and Text Callouts: 12 Pt Text

Bent No., Station, and Profile Grade Elevation to be shown at each bent.

North Arrow to be shown in upper right hand corner of every plan view, if possible.

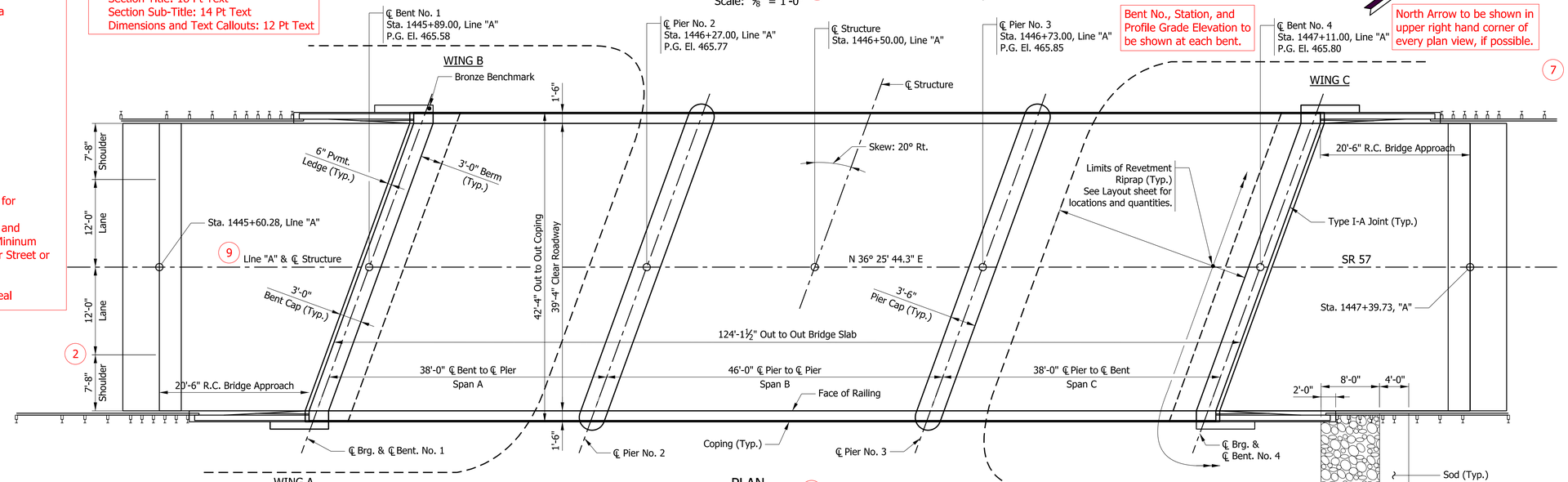

PLAN
Scale: ⅛" = 1'-0" (2)

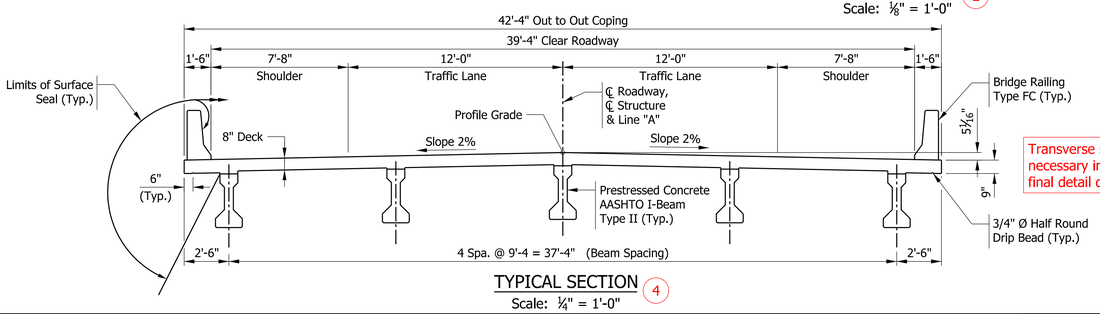

Transverse section to show necessary infromation for final detail drawings.

TYPICAL SECTION
Scale: ¼" = 1'-0" (4)

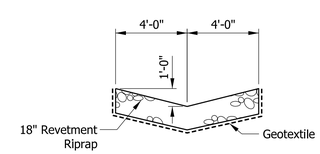

RIPRAP DRAINAGE TURNOUT TYPICAL SECTION

(5) GENERAL NOTES

Reinforcing steel cover shall be 2 1/2" in top and 1" minimum in bottom of floor slab, 3" in footings, except bottom steel which shall be 4", and 2" in all other parts, unless noted.

(6) DESIGN DATA

Designed for HL-93 loading, in accordance with AASHTO LRFD Bridge Design Specifications, Sixth Edition, 2012 and interims through 2013.

DEAD LOAD
Actual weight plus 35 lb/ft² for future wearing surface and 15 lb/ft² for permanent metal deck forms.

FLOOR SLAB
Designed with a 7 1/2" structural depth plus 1/2" sacrificial wearing surface.

DESIGN STRESSES

CONCRETE

Class C	f'_c	= 4000 psi
Class B	f'_c	= 3000 psi
Class A	f'_c	= 3500 psi

REINFORCING STEEL

Grade 60	f'_y	= 60,000 psi

(7) CONSTRUCTION LOADING

The exterior girder has been checked for strength, deflection, and overturning using the construction loads shown below. Cantilever overhang brackets were assumed for support of the deck overhang past the edge of the exterior girder. Finishing machine was assumed to be supported 6 in. outside the vertical coping form. The top overhang brackets were assumed to be located 6 in. past the edge of the vertical coping form. The bottom overhang brackets were assumed to be braced against the intersection of the girder bottom flange and web.

DECK FALSEWORK LOADS
Designed for 15 lb/ft² for permanent metal stay-in-place deck forms, removable deck forms, and 2-ft exterior walkway.

CONSTRUCTION LIVE LOAD
Designed for 20 lb/ft² extending 2 ft past the edge of coping and 75 lb/ft vertical force applied at a distance of 6 in. outside the face of coping over a 30-ft length of the deck centered with the finishing machine.

FINISHING-MACHINE LOAD
4500 lb distributed over 10 ft along the coping.

WIND LOAD
Designed for 70 mph horizontal wind loading in accordance with LRFD 3.8.1.

SEISMIC DESIGN DATA

Seismic Performance Zone	Zone 2
Acceleration Coefficient	0.126
Seismic Soil Profile Type	Class D

Text Style: 18 Pt Text (8)

PRESTRESSED CONCRETE I-BEAM TYPE II BRIDGE
3 SPANS: 38'-0", 46'-0", 38'-0"
39'-4" CLEAR ROADWAY; 20° SKEW RT.
SR 57 OVER VEALE CREEK
DAVIESS COUNTY

Title Block Text:
Labels: 10 Pt Text
Signature: 12 Pt Text

(11) PE SEAL

RECOMMENDED FOR APPROVAL — Engineer of Record — DESIGN ENGINEER — MM/DD/YY DATE

DESIGNED: ABC 03/2013 DRAWN: PQR 03/2013
CHECKED: BCD 04/2013 CHECKED: RST 04/2013

INDIANA
DEPARTMENT OF TRANSPORTATION

GENERAL PLAN

SCALE	BRIDGE FILE
AS NOTED	057-14-000000
	DESIGNATION
	9999999
DRAWING NO.	SHEET
C2 of C14	9 of 31
CONTRACT	PROJECT
B-99999	9999999

Plot: 3/7/2014 11:36 AM

DOTWise\Documents\Standards\Working Drawings\Structural\WChiles\Sample Plan Sheets\Bridge Project\0001250\Design\MS\Sht General Plan wc.dgn

PURPOSE:

The purpose of this End Bent Details sheet is to show physical dimensions, reinforcement and pertinent information necessary for construction of end bent(s).

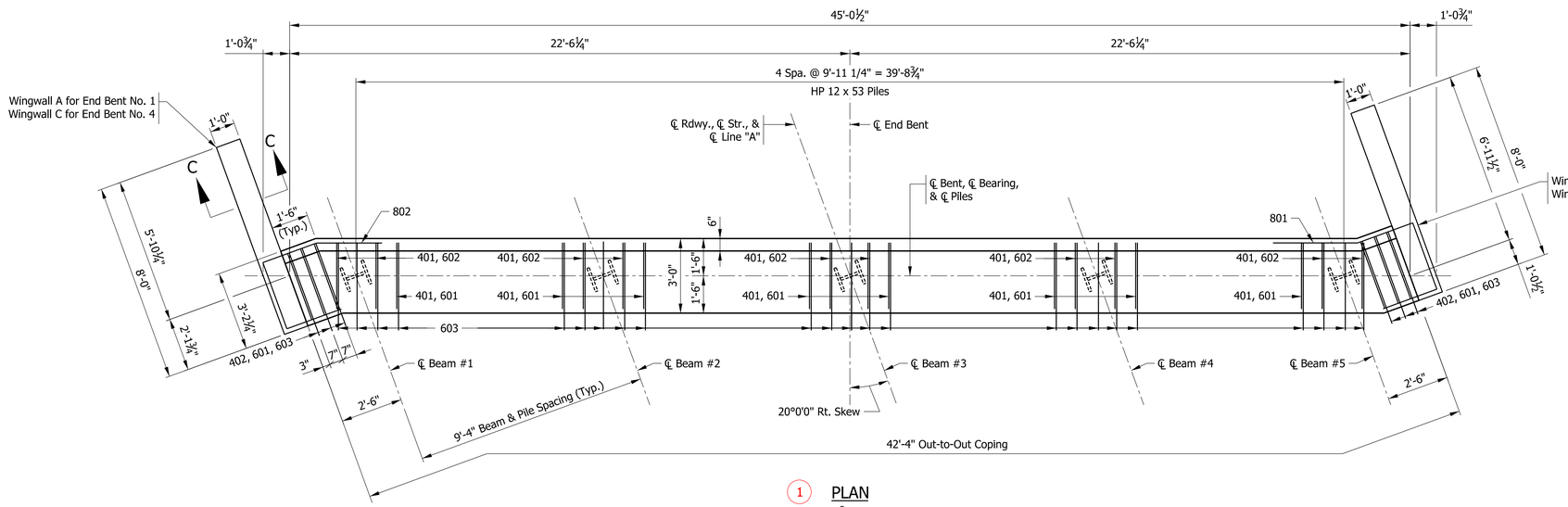

1 PLAN

Scale: ⅜" = 1'-0"

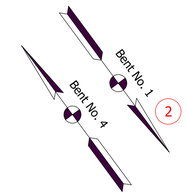

Typ. All Views and Sections:
Section Title: 18 Pt Text
Section Sub-Title: 14 Pt Text
Dimensions and Text Callouts: 12 Pt Text

5 Typ. Table:
Table Title: 18 Pt Text
Table Data: 12 Pt Text

TOP OF PILE ELEVATIONS

	1	2	3	4	5
Bent No. 1	461.39	461.58	461.72	461.51	461.30
Bent No. 4	461.54	461.74	461.94	461.76	461.58

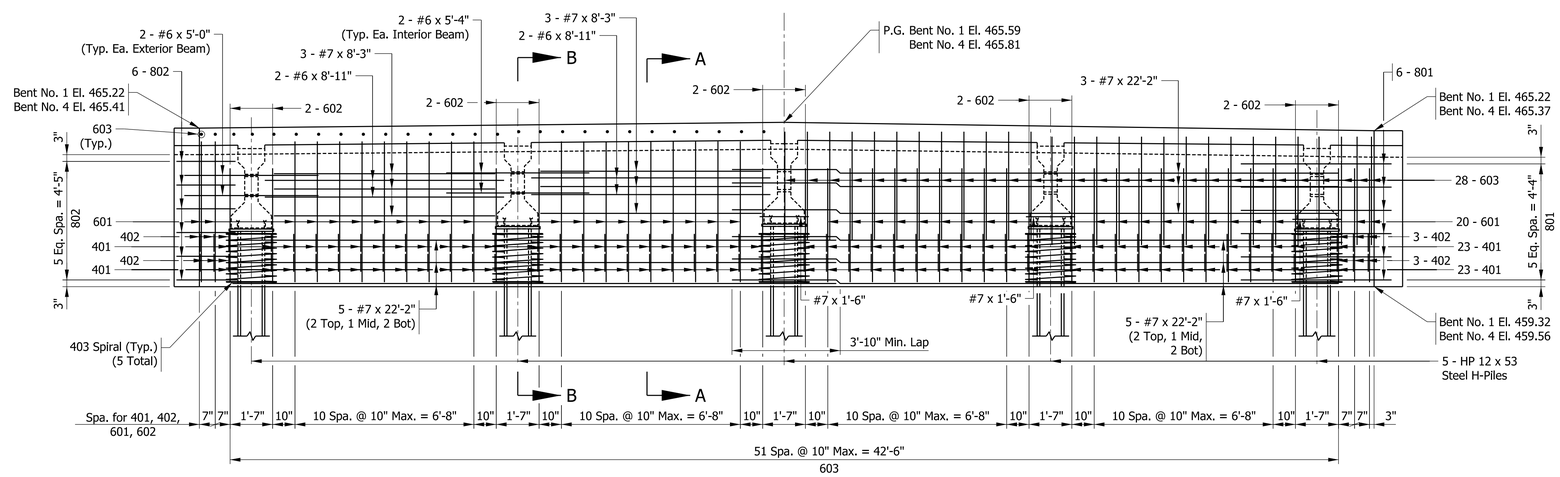

FRONT FACE REINFORCING

REAR FACE REINFORCING

3 ELEVATION

Scale: ⅜" = 1'-0"

REQUIRED ELEMENTS:

1. Plan
   - End Bent Plan
   - Piling Plan
   - Footing Plan
2. North Arrow
3. Elevation Showing Reinforcing
4. Sections as Necessary
5. Table of Top of Pile Elevations (Method A Attachment) or Table of Beam Seat Elevations (Method B Attachment)
6. Notes
7. Signature Block and PE Seal

6 NOTES

1. For Section A-A, Section B-B, and Section C-C, see Drawing C4.
2. For Reinforcing Bar Notes, see Standard Drawing E 703-BRST-01.
3. All reinforcing bars in end bents shall be epoxy-coated.
4. All reinforcement extending below pavement ledge and in the wing is billed with the end bent.
5. Concrete Class C is billed with the superstructure.
6. For Backfill Placement, see Standard Drawing E 211-BFIL-04.

7

Title Block Text:
Labels: 10 Pt Text
Signature: 12 Pt Text

PE SEAL

RECOMMENDED FOR APPROVAL — Engineer of Record — DESIGN ENGINEER — MM/DD/YY DATE

DESIGNED: ABC 03/2013 | DRAWN: PQR 03/2013

CHECKED: BCD 04/2013 | CHECKED: RST 04/2013

INDIANA
DEPARTMENT OF TRANSPORTATION

END BENT NO. 1 AND NO. 4 DETAILS

SCALE	BRIDGE FILE
AS NOTED	057-14-000000
	DESIGNATION
	9999999
DRAWING	SHEET
C3 of C14	10 of 31
CONTRACT	PROJECT
B-99999	9999999

Plot: 3/5/2014 8:22 AM

DOTWise\Documents\Standards\Working Drawings\Structural\WChiles\Sample Plan Sheets\Bridge Project\0001250\Design\MS\Sht End Bent No 1 and 4_01 wc.dgn

PURPOSE:

The purpose of this End Bent Details sheet is to show additional details necessary for construction and Bill of Materials for end bent(s).

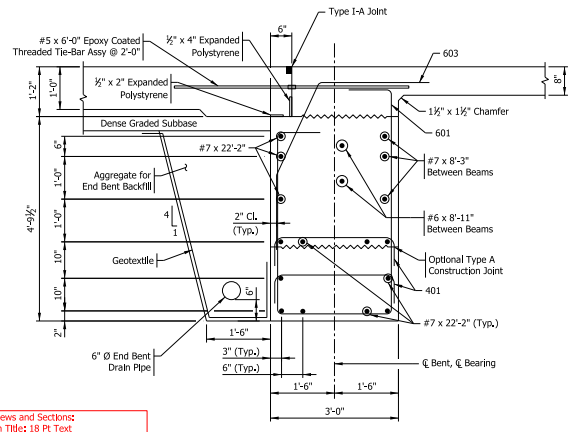

Typ. All Views and Sections:
Section Title: 18 Pt Text
Section Sub-Title: 14 Pt Text
Dimensions and Text Callouts: 12 Pt Text

1 SECTION A-A
Scale: ¾" = 1'-0"

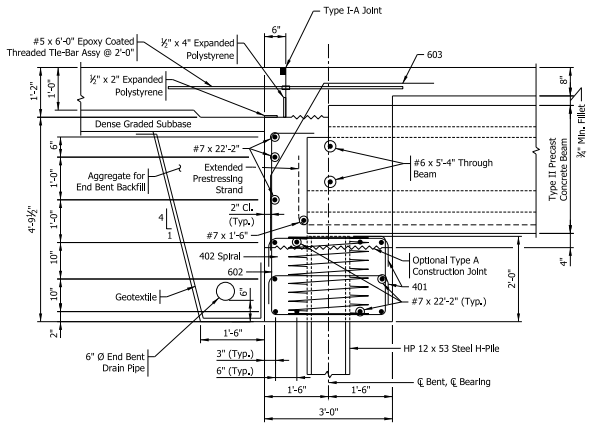

2 SECTION B-B
Scale: ¾" = 1'-0"

When the construction is to be phased, Bills of Materials should be separated by phase.

6

BILL OF MATERIALS
FOR END BENT NO. 1
(END BENT NO. 4 SAME UNLESS NOTED)

EPOXY-COATED REINFORCING BARS			
SIZE & MARK	NO. OF BARS	LENGTH (FT - IN.)	WEIGHT (LB)
801	6	11' - 0"	
802	6	10' - 2"	
		Total #8	339
#7	26	22' - 2"	
#7	12	8' - 3"	
#7	5	1' - 6"	
		Total #7	1396
601	40	14' - 2"	
602	10	10' - 6"	
603	56	6' - 9"	
#6	28	7' - 8"	
#6	36	5' - 5"	
#6	8	8' - 11"	
#6	6	5' - 4"	
#6	4	5' - 0"	
		Total #6	2467
401	92	4' - 0"	
402	12	4' - 2"	
403	5	69' - 6"	
		Total #4	511
Total Epoxy-Coated Reinforcing Bars			4713
MISCELLANEOUS			
Pile, Steel H-Pile 12 x 53, 5 @ 84'-0" (Bent No. 1)			420 Lft
Pile, Steel H-Pile 12 x 53, 4 @ 78'-0" (Bent No. 4)			312 Lft
Pile Shoe, 10 (Steel H-Pile 12 x 53)			5 Ea
Test Pile, Dynamic, Production, 1 @ 88 Lft (Bent No. 4)			88 Lft
Dynamic Pile Load Test (Bent No. 4)			1 Each
Test Pile, Dynamic, Restrike (Bent No. 4)			1 Each

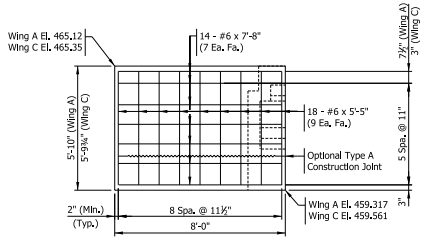

3 WING A & WING C ELEVATION
Scale: ⅜" = 1'-0"

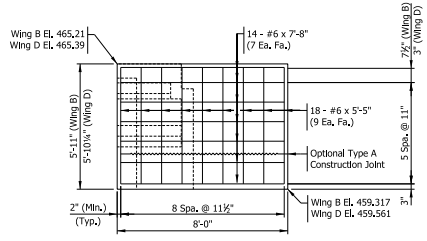

3 WING B & WING D ELEVATION
Scale: ⅜" = 1'-0"

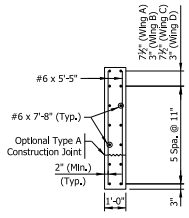

4 SECTION C-C
Scale: ¾" = 1'-0"

REQUIRED ELEMENTS:

1. End Bent Section Between Beams
2. End Bent Section Through Beam
3. Wing Elevation
4. Wing Section
5. Reinforcing Bar Bending Diagrams
6. Bill of Materials
7. Anchor Plate Detail When Required
8. Notes
9. Signature Block and PE Seal

Bar bending diagrams are not shown to scale. However, they should be drawn to approximate proportions.

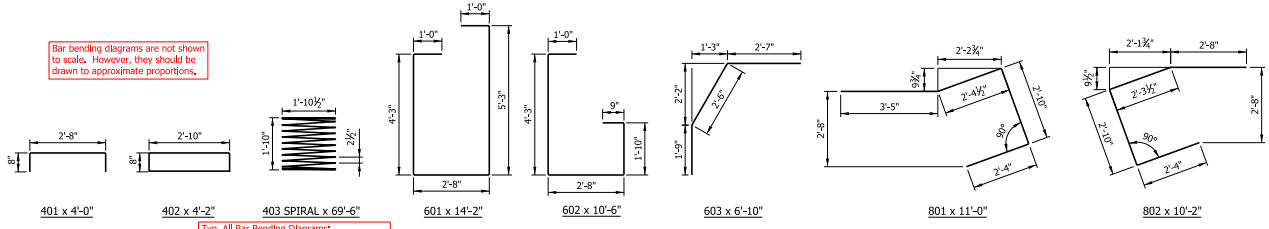

Show bar mark and total length of bar, rounded to nearest 1 in.

Typ. All Bar Bending Diagrams:
Title: 18 Pt Text
Bar Mark Title: 14 Pt Text
Dimensions and Text Callouts: 12 Pt Text
See IDM 405-2.0 for guidance regarding detailing reinforcing steel.

5 BAR BENDING DETAILS
Not to Scale

8 NOTES

1. For End Bent Plan and Elevation, locations of Section A-A, Section B-B, and Section C-C, see Drawing C3.
2. For Reinforcing Bar Notes, see Standard Drawing E 703-BRST-01.
3. All reinforcing bars in end bents shall be epoxy-coated.
4. All reinforcement extending below pavement ledge and in the wing is billed with the end bent.
5. Concrete Class C is billed with the superstructure.
6. For Pavement Ledge Details, see Drawing C14.
7. For Backfill Placement, see Standard Drawing E 211-BFIL-04.

9

Title Block Text:
Labels: 10 Pt Text
Signature: 12 Pt Text

PE SEAL

RECOMMENDED FOR APPROVAL — Engineer of Record — DESIGN ENGINEER — MM/DD/YY DATE

DESIGNED: ABC 03/2013 DRAWN: PQR 03/2013
CHECKED: BCD 04/2013 CHECKED: RST 04/2013

INDIANA
DEPARTMENT OF TRANSPORTATION

END BENT NO. 1 AND NO. 4 DETAILS

SCALE	BRIDGE FILE
AS NOTED	057-14-000000
	DESIGNATION
	9999999
DRAWING	SHEET
C4 of C14	11 of 31
CONTRACT	PROJECT
B-99999	9999999

Plot: 3/4/2014 4:31 PM

DOTWise\Documents\Standards\Working Drawings\Structural\WChiles\Sample Plan Sheets\Bridge Project\0001250\Design\MS\Sht End Bent No 1 and 4_02 wc.dgn

PURPOSE:

The purpose of this Pier Details sheet is to show the pier dimensions, reinforcement, and pertinent information necessary for construction.

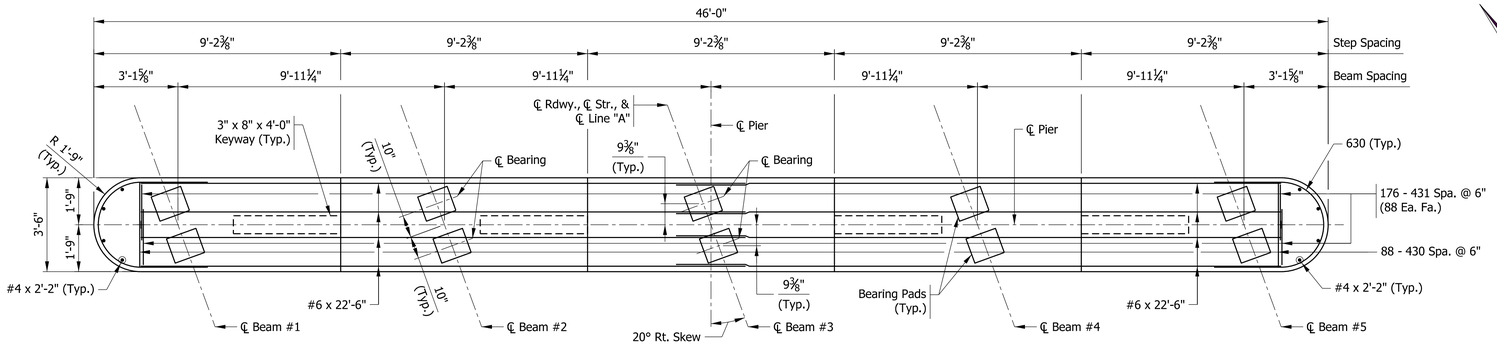

2 PLAN
Scale: ⅜" = 1'-0"

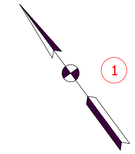

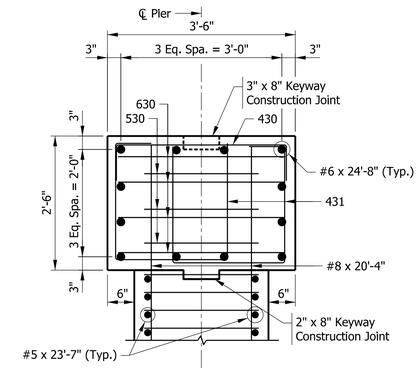

5 DETAIL A
Scale: ¾" = 1'-0"

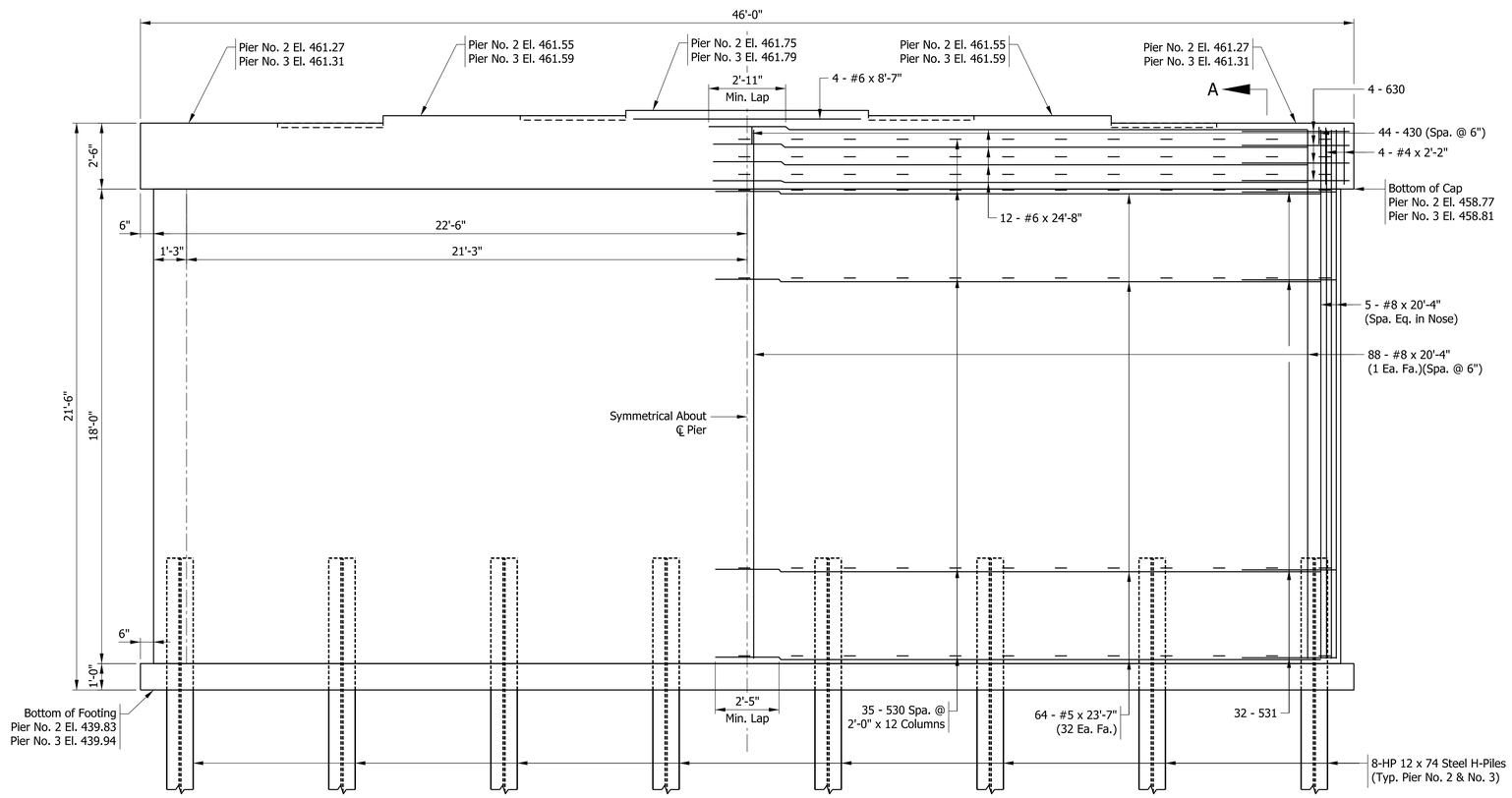

3 ELEVATION
Scale: ⅜" = 1'-0"

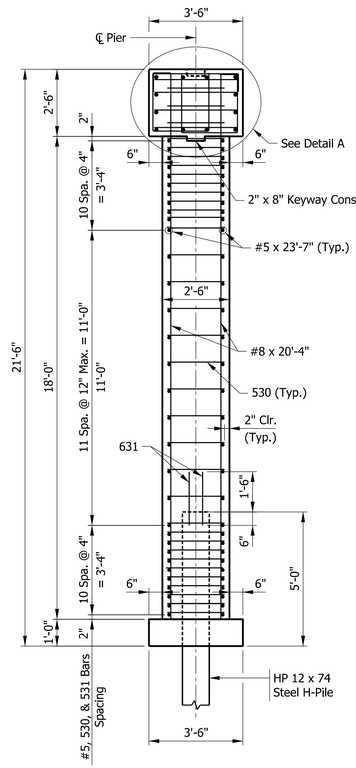

4 SECTION A-A
Scale: ⅜" = 1'-0"

Typ. All Views and Sections:
Section Title: 18 Pt Text
Section Sub-Title: 14 Pt Text
Dimensions and Text Callouts: 12 Pt Text

REQUIRED ELEMENTS:

1. North Arrow
2. Cap Plan
3. Elevation showing Dimensions and Reinforcing Steel
4. Vertical Sections as Needed
5. Cap Section
6. Notes
7. Signature Block and PE Seal

6 NOTES

1. For General Notes, see Drawing C2.
2. For Reinforcing Bar Notes, see Standard Drawing E 703-BRST-01.
3. For Bill of Materials, see Drawing C6.

7

Title Block Text:
Labels: 10 Pt Text
Signature: 12 Pt Text

PE SEAL

RECOMMENDED FOR APPROVAL *Engineer of Record* MM/DD/YY
DESIGN ENGINEER DATE

DESIGNED: ABC 03/2013 DRAWN: PQR 03/2013
CHECKED: BCD 04/2013 CHECKED: RST 04/2013

INDIANA
DEPARTMENT OF TRANSPORTATION

PIER NO. 2 AND NO. 3 DETAILS

SCALE	BRIDGE FILE
AS NOTED	057-14-000000
	DESIGNATION
	9999999
DRAWING	SHEET
C5 of C14	12 of 31
CONTRACT	PROJECT
B-99999	9999999

Plot: 3/4/2014 4:32 PM

DOTWise\Documents\Standards\Working Drawings\Structural\WChiles\Sample Plan Sheets\Bridge Project\0001250\Design\MS\Sht Pier No 2 and 3_01 wc.dgn

PURPOSE:

The purpose of this Pier Details sheet is to show additional details necessary for construction and Bill of Materials for piers.

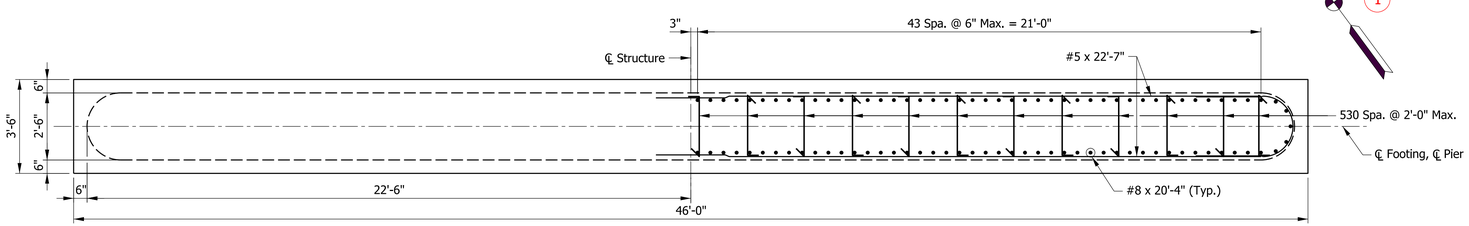

CONCRETE DIMENSIONS

REINFORCING STEEL

2 FOOTING PLAN
Scale: ⅜" = 1'-0"

Typ. All Views and Sections:
Section Title: 18 Pt Text
Section Sub-Title: 14 Pt Text
Dimensions and Text Callouts: 12 Pt Text

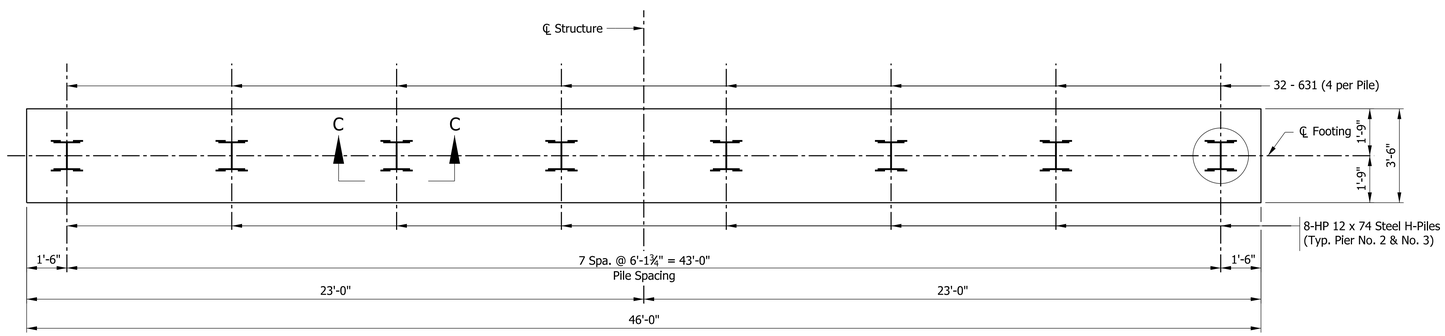

3 PILE PLAN
Scale: ⅜" = 1'-0"

Bar bending diagrams are not shown to scale. However, they should be drawn to approximate proportions.

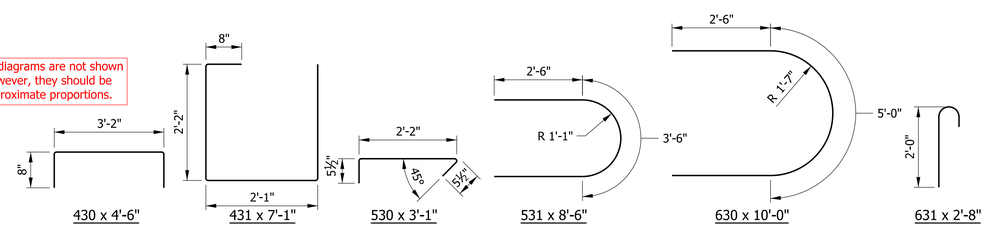

5 BAR BENDING DETAILS
Not to Scale

Show bar mark and total length of bar, rounded to nearest 1 in.

Typ. All Bar Bending Diagrams:
Title: 18 Pt Text
Bar Mark Title: 14 Pt Text
Dimensions and Text Callouts: 12 Pt Text
See IDM 405-2.0 for guidance regarding detailing reinforcing steel.

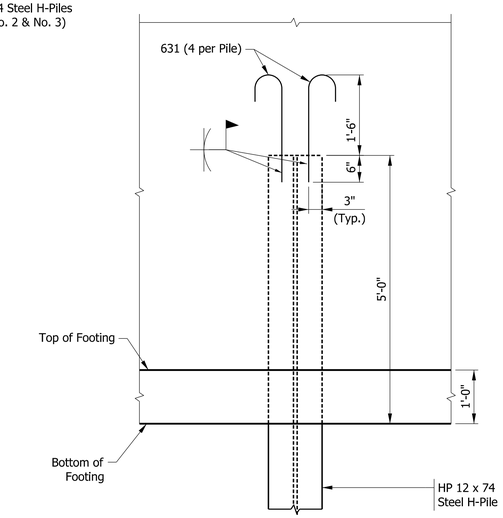

4 SECTION C-C
Scale: ¾" = 1'-0"

When the construction is to be phased, Bills of Materials should be separated by phase.

6

BILL OF MATERIALS
FOR PIER NO. 2
(PIER NO. 3 SAME UNLESS NOTED)

REINFORCING BARS			
SIZE & MARK	NO. OF BARS	LENGTH (FT - IN.)	WEIGHT (LB)
#8	186	20' - 4"	
		Total #8	10098
630	8	10' - 0"	
631	32	2' - 8"	
#6	24	24' - 8"	
#6	4	15' - 6"	
		Total #6	1231
530	805	3' - 1"	
531	64	8' - 6"	
#5	128	23' - 7"	
		Total #5	6305
430	88	4' - 6"	
431	176	7' - 1"	
#4	8	2' - 2"	
		Total #4	1109
Total Reinforcing Bars			18743

CONCRETE	
Concrete Class "A" in Cap	15.0 Cys
Concrete Class "A" in Column	75.0 Cys
Total Class "A" Concrete	96.0 Cys
Concrete Class "B" in Footings	6.0 Cys

MISCELLANEOUS	
Pile, Steel H-Pile 12 x 74, 7 @ 70'-0" (Pier No. 2)	490 Lft
Pile, Steel H-Pile 12 x 74, 8 @ 70'-0" (Pier No. 3)	560 Lft
Pile Shoe, 8 (Steel H-Pile 12 x 74)	8 Ea
Test Pile, Dynamic, Production, 1 @ 80 Lft (Pier No. 2)	80 Lft
Dynamic Pile Load Test (Pier No. 2)	1 Each
Test Pile, Dynamic, Restrike (Pier No. 2)	1 Each

REQUIRED ELEMENTS:

1. North Arrow
2. Footing Plan
3. Pile Plan
4. Pile Connection Detail
5. Reinforcing Bar Bending Diagrams
6. Bill of Materials
7. Notes
8. Signature Block and PE Seal

7 NOTES

1. For General Notes, see Drawing C2.
2. For Reinforcing Bar Notes, see Standard Drawing E 703-BRST-01.

8

Title Block Text:
Labels: 10 Pt Text
Signature: 12 Pt Text

PE SEAL

RECOMMENDED FOR APPROVAL — Engineer of Record — DESIGN ENGINEER — MM/DD/YY DATE

DESIGNED: ABC 03/2013 | DRAWN: PQR 03/2013
CHECKED: BCD 04/2013 | CHECKED: RST 04/2013

INDIANA
DEPARTMENT OF TRANSPORTATION

PIER NO. 2 AND NO. 3 DETAILS

SCALE	BRIDGE FILE
AS NOTED	057-14-000000
	DESIGNATION
	9999999
DRAWING	SHEET
C6 of C14	13 of 31
CONTRACT	PROJECT
B-99999	9999999

Plot: 3/4/2014 4:32 PM

DOTWise\Documents\Standards\Working Drawings\Structural\WChiles\Sample Plan Sheets\Bridge Project\0001250\Design\MS\Sht Pier No 2 and 3_02 wc.dgn

PURPOSE:

The purpose of this Framing Plan sheet is to provide all necessary tie-in dimensions and beam end details as required.

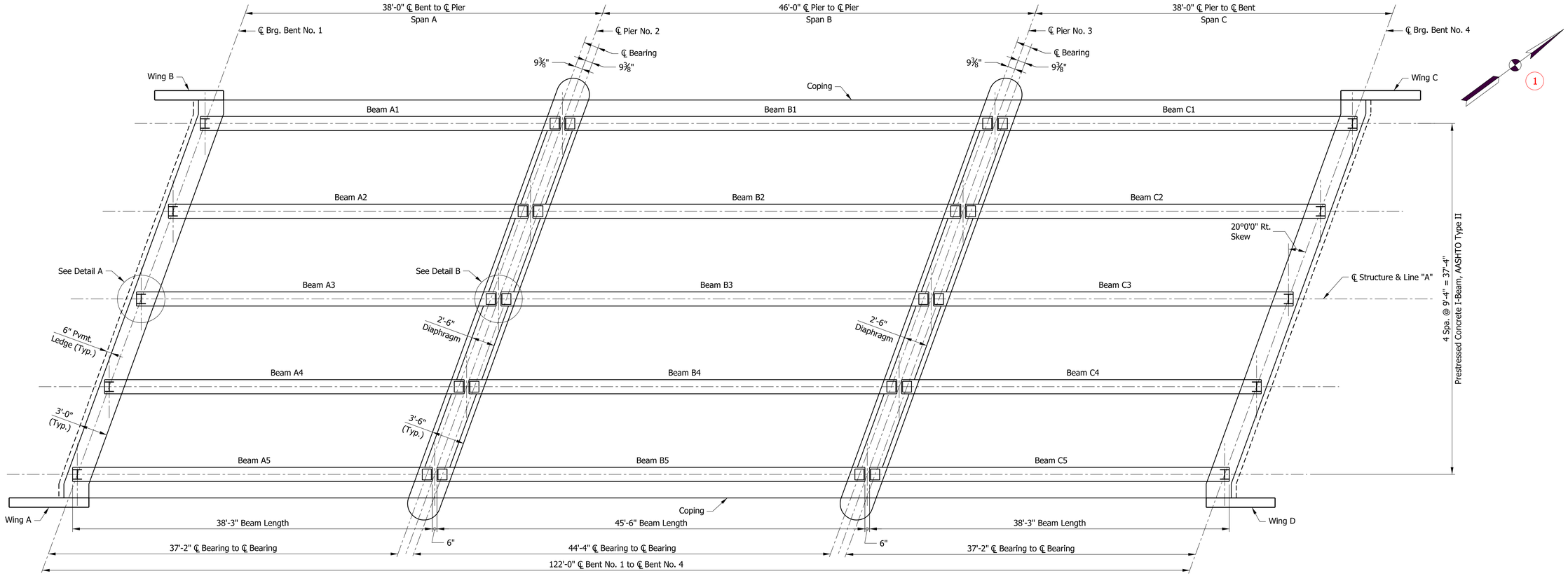

2 FRAMING PLAN
Scale: 3/16" = 1'-0"

Typ. All Views and Sections:
Section Title: 18 Pt Text
Section Sub-Title: 14 Pt Text
Dimensions and Text Callouts: 12 Pt Text

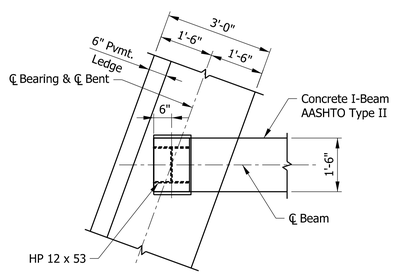

3 DETAIL A
BEARING SEAT ON END BENT
Scale: ½" = 1'-0"

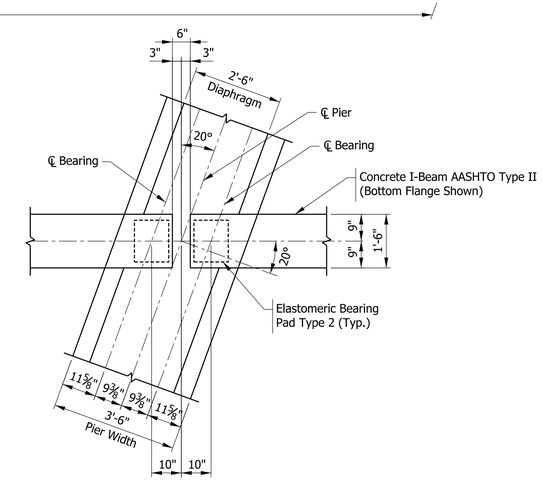

4 DETAIL B
BEARING SEAT ON PIER
Scale: ½" = 1'-0"

REQUIRED ELEMENTS:

1. North Arrow
2. Framing Plan
3. Beam Bearing Seat Detail at End Bent
4. Beam Bearing Seat Detail at Pier
5. Notes
6. Signature Block and PE Seal

5 NOTES

1. For General Notes, see Drawing C2.
2. For Beam Details, see Drawings C8 and C9.
3. For Bearing Assembly Details, see Drawing C9.

6

Title Block Text:
Labels: 10 Pt Text
Signature: 12 Pt Text

PE SEAL

RECOMMENDED FOR APPROVAL — Engineer of Record — DESIGN ENGINEER — MM/DD/YY DATE

DESIGNED: ABC 03/2013 | DRAWN: PQR 03/2013
CHECKED: BCD 04/2013 | CHECKED: RST 04/2013

INDIANA
DEPARTMENT OF TRANSPORTATION

FRAMING PLAN

SCALE	BRIDGE FILE
AS NOTED	057-14-000000
	DESIGNATION
	9999999
DRAWING	SHEET
C7 of C14	14 of 31
CONTRACT	PROJECT
B-99999	9999999

Plot: 3/4/2014 4:33 PM

DOTWise\Documents\Standards\Working Drawings\Structural\WChiles\Sample Plan Sheets\Bridge Project\0001250\Design\MS\Sht Framing Plan wc.dgn

PURPOSE:

The purpose of this Beam Details sheet is to show the longitudinal beam information necessary for fabrication of the beams and related design data.

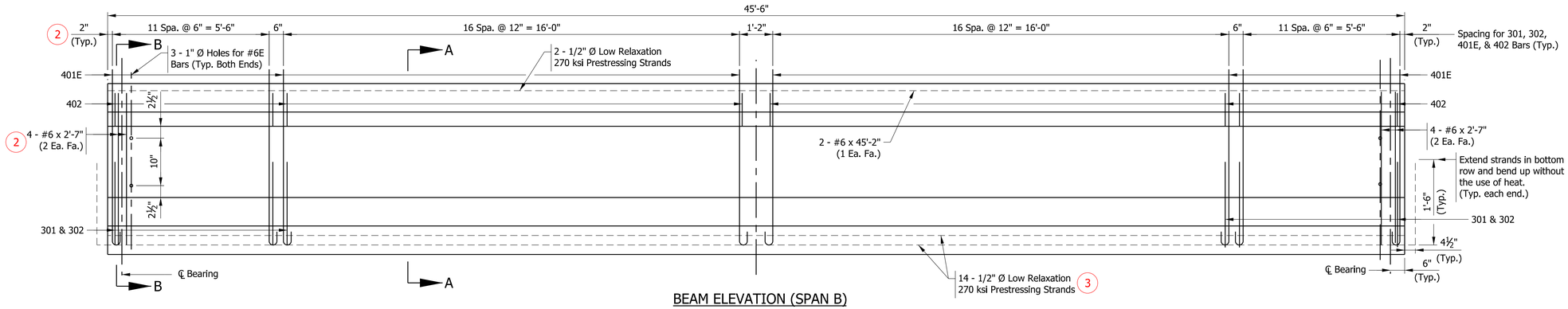

BEAM ELEVATION (SPAN B)

Horizontal Scale: ½" = 1'-0"

Vertical Scale: 1" = 1'-0"

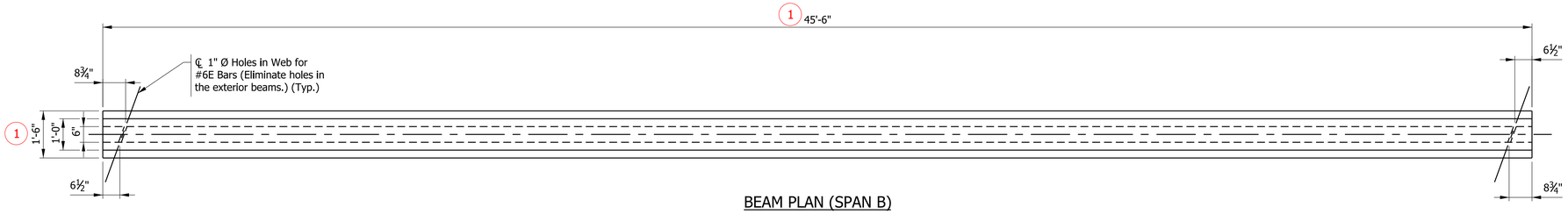

BEAM PLAN (SPAN B)

Scale: ½" = 1'-0"

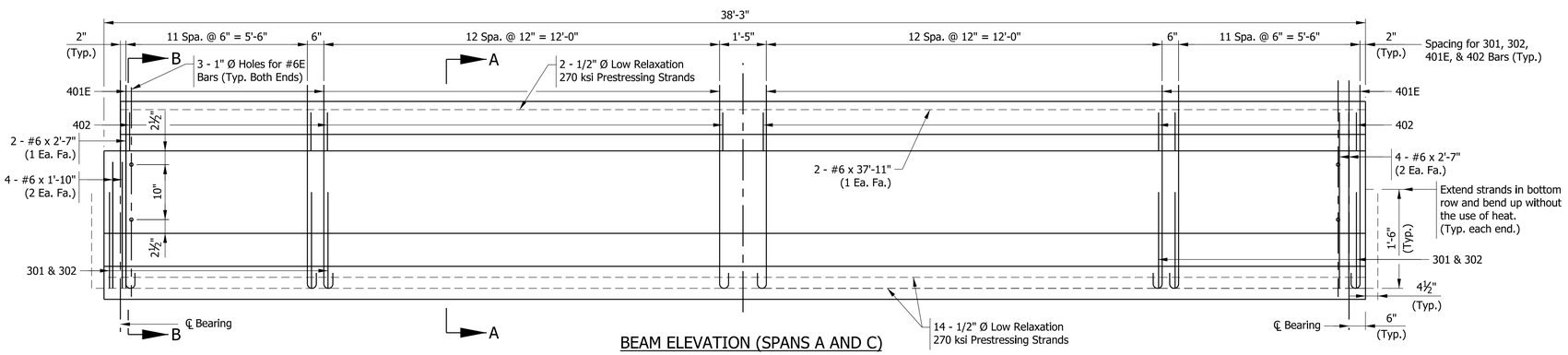

BEAM ELEVATION (SPANS A AND C)

Horizontal Scale: ½" = 1'-0"

Vertical Scale: 1" = 1'-0"

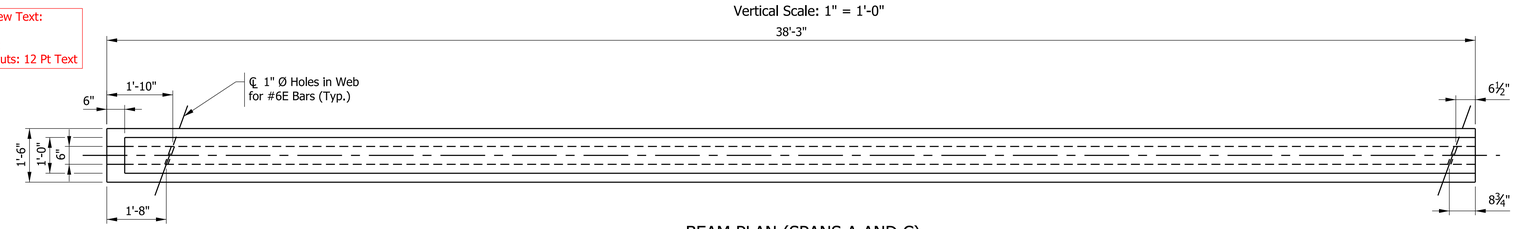

BEAM PLAN (SPANS A AND C)

Scale: ½" = 1'-0"

Typ. All Plan and Elevation View Text:
View Title: 18 Pt Text
View Sub-Title: 14 Pt Text
Dimensions and Text Callouts: 12 Pt Text

Typ. All Notes Blocks:
Titles: 18 Pt Text
Section Headings: 14 Pt Text
Notes Body: 12 Pt Text

4 DESIGN DATA

Prestressing steel shall be 0.5" uncoated, low relaxation, seven-wire strand, 270 ksi (ASTM A416).
Initial pull per strand, 33.82 kips.
Concrete strength at release, f'_{ci} = 6,000 psi.
Concrete strength at 28 days, f'_c = 7,000 psi.
Reinforcing steel shall be Grade 60 ksi minimum yield strength.

5 GENERAL NOTES - BEAMS

1. Beams shall be cast a minimum 90 days prior to pouring the deck.
2. Beams are to be lifted and supported at the bearing points during handling, storage, and transportation.
3. Estimated elastic shortening is 0.104 in.
4. Allowance in the beam length should be made during fabrication.
5. For Type 2 Elastomeric Bearing Pad, see Standard Drawings E 726-BEBP-01 through -03.
6. For Fabrication Tolerances of Prestressed Beams, see Standard Drawings E 707-BPBF-01 through -04.
7. For Reinforcing Bar Notes, see Standard Drawing E 703-BRST-01.
8. Reinforcing bars designated "E" shall be epoxy coated.
9. See Drawing C9 for beam sections and bar bending diagrams.

REQUIRED ELEMENTS:

1. Beam Dimensions
2. Reinforcing Bars
3. Prestressing Strands
4. Design Data. Example only. Project specific information required.
5. General Notes for Beams. Example only. Project specific information required.

PE SEAL

RECOMMENDED FOR APPROVAL — Engineer of Record — DESIGN ENGINEER — MM/DD/YY DATE

DESIGNED: ABC 03/2013 | DRAWN: PQR 03/2013

CHECKED: BCD 04/2013 | CHECKED: RST 04/2013

INDIANA
DEPARTMENT OF TRANSPORTATION

BEAM DETAILS

SCALE	BRIDGE FILE
AS NOTED	057-14-000000
	DESIGNATION
	9999999
DRAWING	SHEET
C8 of C14	15 of 31
CONTRACT	PROJECT
B-99999	9999999

Title Block Text:
Labels: 10 Pt Text
Signature: 12 Pt Text

Plot: 4/4/2014 11:18 AM

DOTWise\Documents\Standards\Working Drawings\Structural\WChiles\Sample Plan Sheets\Bridge Project\0001250\Design\MS\Sht Beam Details_01 wc.dgn

PURPOSE:

The purpose of this Beam Details sheet is to show the transverse beam dimensions and reinforcing bar information necessary for fabrication of the beams.

Typ. All Sections:
Section Title: 18 Pt Text
Section Sub-Title: 14 Pt Text
Dimensions and Text Callouts: 12 Pt Text

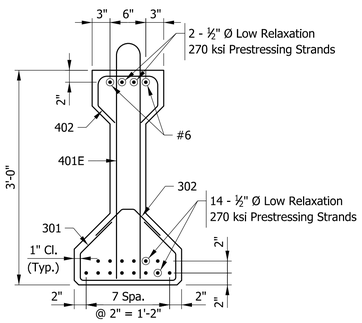

1 REINFORCING

SECTION A-A
Scale: 1" = 1'-0"

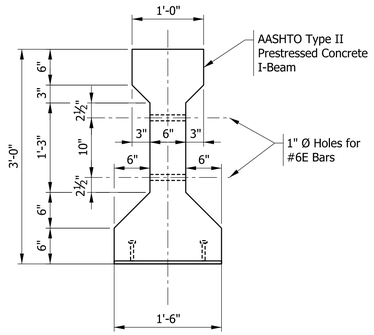

1 INTERIOR BEAM DIMENSIONS

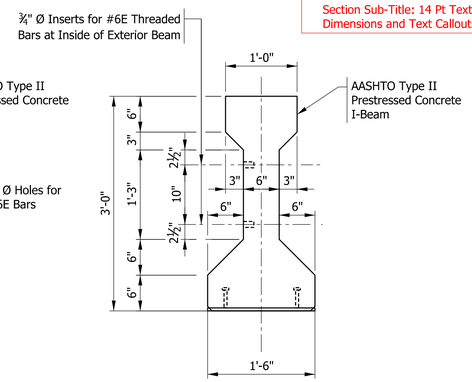

2 EXTERIOR BEAM DIMENSIONS

SECTION B-B
Scale: 1" = 1'-0"

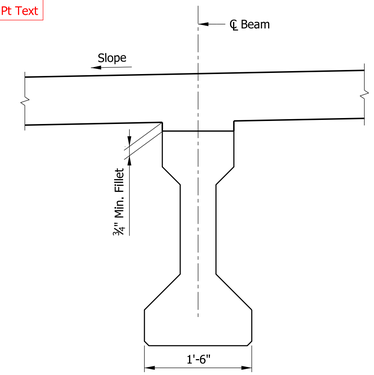

SECTION E-E

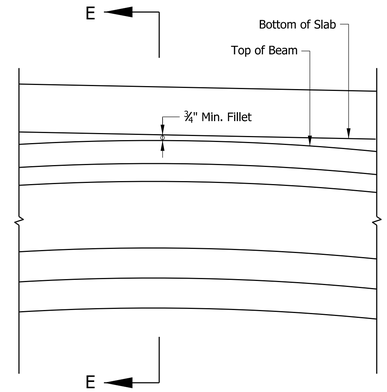

ELEVATION ALONG ℄ OF BEAM

7 FILLET DETAIL
Scale: 1" = 1'-0"

9 Typ. Table:
Table Title: 18 Pt Text
Table Data: 12 Pt Text

TABLE OF CAMBERS (in.)

	SPAN A & C	SPAN B
Initial Camber	0.760	0.997
Dead Load Deflection	0.146	0.292
Residual Camber	0.614	0.705

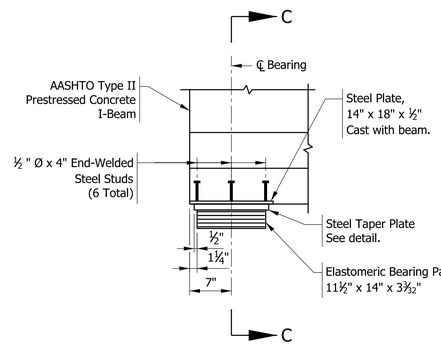

ELEVATION

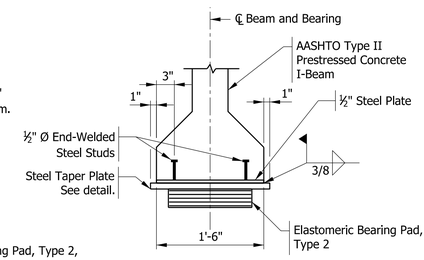

END VIEW C-C

3 BEAM BEARING ASSEMBLY AT PIER
Scale: 1" = 1'-0"

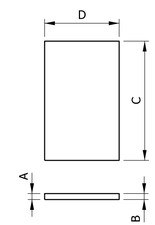

4 TAPER PLATE DETAIL
Scale: 1" = 1'-0"

TAPER PLATE TABLE

Location	A	B	C	D
Pier No. 2 (Span A)	1"	1"	20"	12½"
Pier No. 2 (Span B)	1"	1"	20"	12½"
Pier No. 3 (Span A)	1"	1"	20"	12½"
Pier No. 3 (Span B)	1"	1"	20"	12½"

A = Back Station Side
B = Forward Station Side
Plates shall be vulcanized to elastomeric bearings.

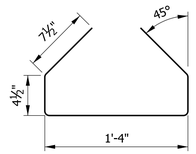

301 x 3'-4"

Bar bending diagrams are not shown to scale. However, they should be drawn to approximate proportions.

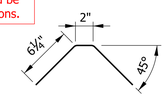

302 x 1'-3"

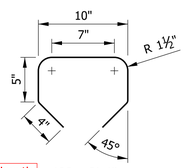

402 x 2'-4"

Show bar mark and total length of bar, rounded to nearest 1 in.

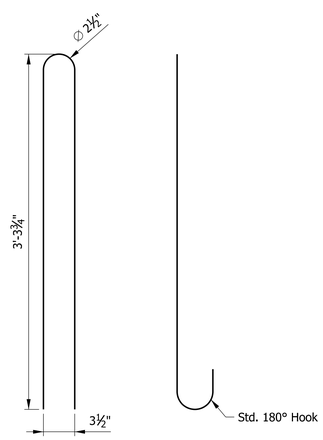

END VIEW SIDE VIEW

401E x 7'-8"

8 BAR BENDING DETAILS
Not to Scale

Typ. All Bar Bending Diagrams:
Title: 18 Pt Text
Bar Mark Title: 14 Pt Text
Dimensions and Text Callouts: 12 Pt Text
See IDM 405-2.0 for guidance regarding detailing reinforcing steel.

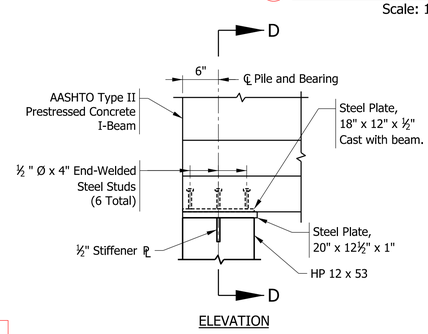

ELEVATION

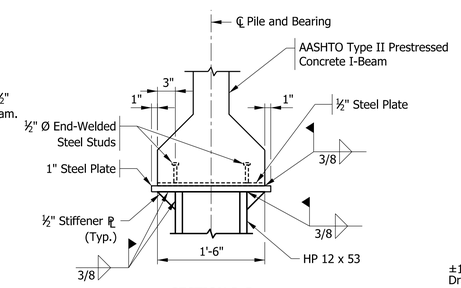

SECTION D-D

6 BEAM BEARING ASSEMBLY AT END BENT
Scale: 1" = 1'-0"

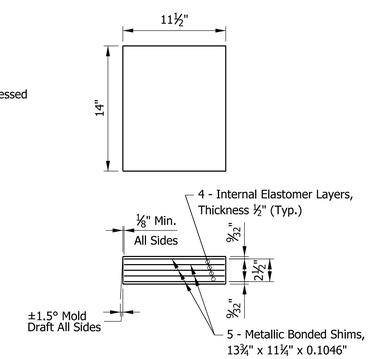

5 TYPE 2 ELASTOMERIC BEARING PAD DETAIL
Scale: 3" = 1'-0"

REQUIRED ELEMENTS:

1. Sections Showing Beam Dimensions
2. Section Showing Beam Reinforcing and Prestressing Strands
3. Beam Bearing Assembly Details at Piers
4. Taper Plate Detail (When Needed)
5. Elastomeric Bearing Pad Detail
6. Beam Bearing Assembly Details at End Bent
7. Fillet Detail Including Section and Elevation
8. Reinforcing Bar Bending Diagrams
9. Camber Table
10. Notes
11. Signature Block and PE Seal

10 NOTES

1. For general beam notes and design data, see Drawing C8.
2. Bearing assemblies shall be included in the cost of structural members.

11

PE SEAL

RECOMMENDED FOR APPROVAL Engineer of Record MM/DD/YY
DESIGN ENGINEER DATE

DESIGNED: ABC 03/2013 DRAWN: PQR 03/2013
CHECKED: BCD 04/2013 CHECKED: RST 04/2013

INDIANA
DEPARTMENT OF TRANSPORTATION

BEAM DETAILS

SCALE	BRIDGE FILE
AS NOTED	057-14-000000
	DESIGNATION
	9999999
DRAWING	SHEET
C9 of C14	16 of 31
CONTRACT	PROJECT
B-99999	9999999

Title Block Text:
Labels: 10 Pt Text
Signature: 12 Pt Text

Plot: 4/4/2014 11:23 AM

DOTWise\Documents\Standards\Working Drawings\Structural\WChiles\Sample Plan Sheets\Bridge Project\0001250\Design\MS\Sht Beam Details_02 wc.dgn

PURPOSE:

The purpose of this Beam Details sheet is to show the longitudinal and section information necessary for fabrication of the beams, as well as related design data. This sheet is produced using the appropriate Standard Beam Details Sheet template drawing file.

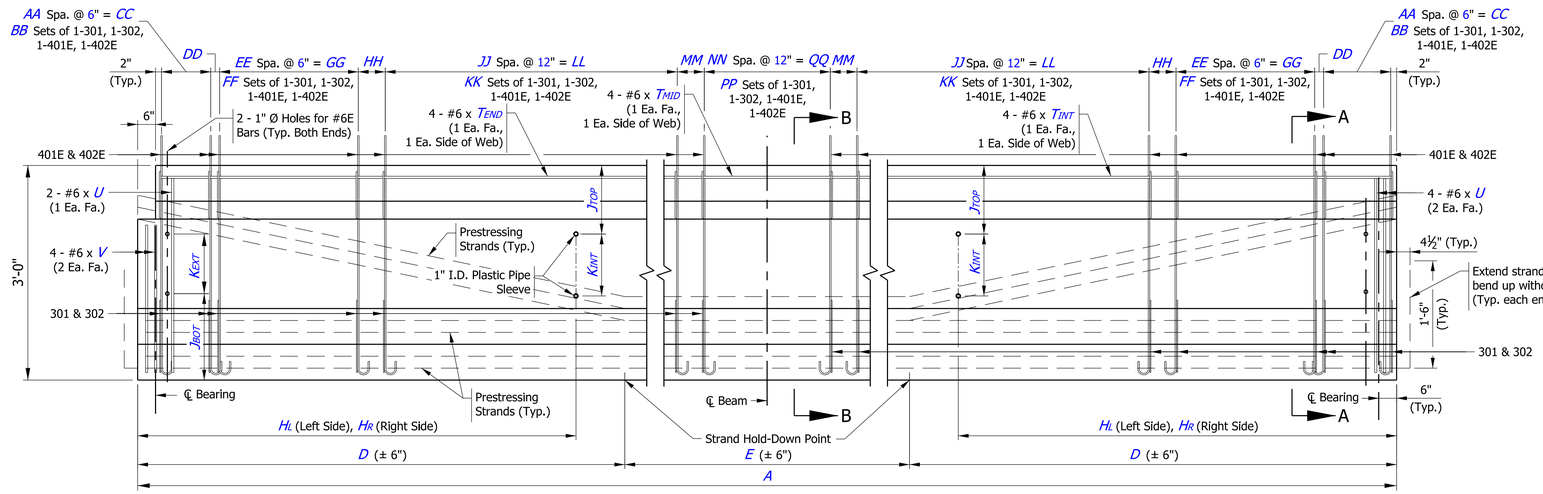

1 BEAM ELEVATION
Horizontal Scale: 1/2" = 1'-0"
Vertical Scale: 1" = 1'-0"

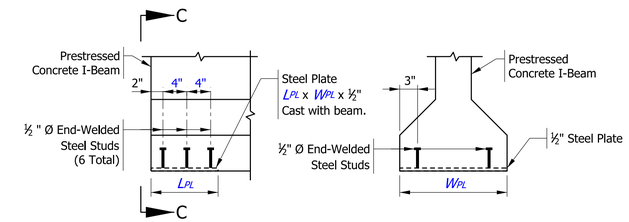

4 BEAM BEARING PLATE ASSEMBLY
Scale: 1" = 1'-0"

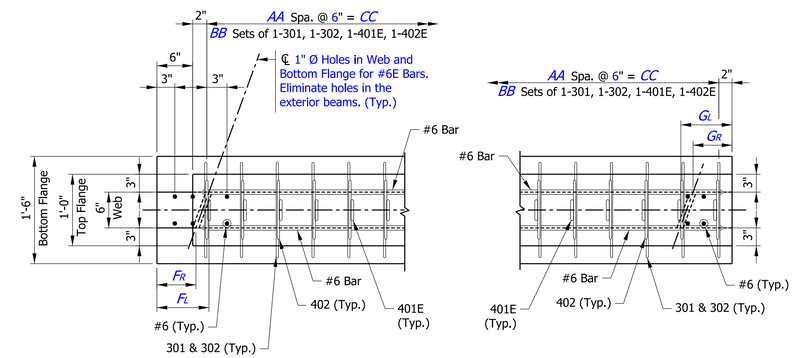

3 TYPICAL END TREATMENT END BENT PLAN VIEW
Scale: 1" = 1'-0"

3 TYPICAL END TREATMENT INTERIOR PIER PLAN VIEW
Scale: 1" = 1'-0"

REQUIRED ELEMENTS:

1. Beam Elevation
2. Beam Sections--End Span and Midspan
3. End Treatment Plan Views
4. Beam Bearing Plate Assembly for Embedded Plates
5. Reinforcing Bar Bending Details
6. Design Data. Example only. Project specific information required
7. General Notes for Beams. Example only. Project specific information required
8. Completed Summary Table:
   Beam Data
   Prestressing Strand Data
   Reinforcing Bar Data
9. Signature Block and PE Seal

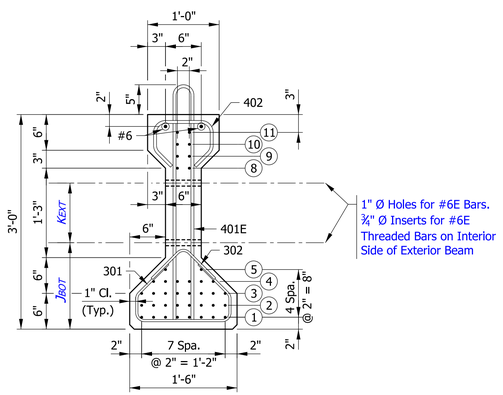

2 END SPAN SECTION A-A
Scale: 1" = 1'-0"

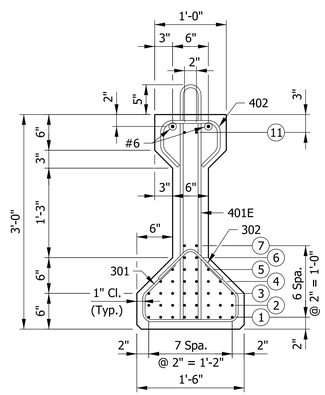

2 MIDSPAN SECTION B-B
Scale: 1" = 1'-0"

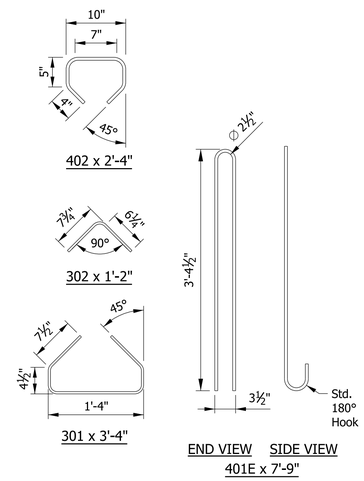

5 BAR BENDING DETAILS
Not to Scale

6 DESIGN DATA

Prestressing steel shall be 0.5" uncoated, low relaxation, seven-wire strand, 270 ksi (ASTM A416).
Initial pull per strand, 33.82 kips.
Concrete strength at release, f'_{ci} = 6,000 psi.
Concrete strength at 28 days, f'_c = 7,000 psi.
Reinforcing steel shall be Grade 60 ksi minimum yield strength.

7 GENERAL NOTES - BEAMS

1. Beams shall be cast a minimum 28 days prior to pouring the deck.
2. Beams are to be lifted and supported at the bearing points during handling, storage, and transportation.
3. Estimated elastic shortening is 0.104 in.
4. Allowance in the beam length should be made during fabrication.
5. For Elastomeric Bearing Pads, see Standard Drawings E 726-BEBP-01 through -03.
6. For Fabrication Tolerances of Prestressed Beams, see Standard Drawings E 707-BPBF-01 through -04.
7. For Reinforcing Bar Notes, see Standard Drawing E 703-BRST-01.
8. Reinforcing bars designated "E" shall be epoxy coated.
9. Top of beams shall be scored transversely at about 3" on center with pointed tool.

8

BEAM	BEAM DATA – DIMENSIONS														
	A	D	E	FL	FR	GL	GR	HL	HR	JBOT	KEXT	JTOP	KINT	LPL	WPL
A	38'-3"	-	-	1'-10"	1'-8"	8¾"	6½"	-	-	1'-2½"	10"	-	-	12½"	20"
B	45'-6"	-	-	-	-	8¾"	6½"	-	-	1'-2½"	10"	-	-	12½"	20"
C	38'-3"	-	-	1'-10"	1'-8"	8¾"	6½"	-	-	1'-2½"	10"	-	-	12½"	20"

BEAM	PRESTRESSING STRAND DATA – END (SECTION A-A)											MIDSPAN (SECTION B-B)											TOTAL NO.	HOLD-DOWN FORCE
	1	2	3	4	5	6	7	8	9	10	11	1	2	3	4	5	6	7	8	9	10	11		
A	8	6	-	-	-	-	-	-	-	-	2	8	6	-	-	-	-	-	-	-	-	2	16	-
B	8	6	-	-	-	-	-	-	-	-	2	8	6	-	-	-	-	-	-	-	-	2	16	-
C	8	6	-	-	-	-	-	-	-	-	2	8	6	-	-	-	-	-	-	-	-	2	16	-

BEAM	REINFORCING BAR DATA – COUNTS, SPACING, & DIMENSIONS																						TOTALS			
	AA	BB	CC	DD	EE	FF	GG	HH	JJ	KK	LL	MM	NN	PP	QQ	TEND	TMID	TINT	U	V	301	302	401E	402
A	11	12	5'-6"	6"	-	-	-	-	12	13	12'-0"	8½"	-	-	-	37'-11"	-	37'-11"	2'-7"	1'-10"	46	46	46	46
B	11	12	5'-6"	6"	-	-	-	-	16	17	16'-0"	7"	-	-	-	45'-2"	-	45'-2"	2'-7"	1'-10"	54	54	54	54
C	11	12	5'-6"	6"	-	-	-	-	12	13	12'-0"	8½"	-	-	-	37'-11"	-	37'-11"	2'-7"	1'-10"	46	46	46	46

PE SEAL

RECOMMENDED FOR APPROVAL — Engineer of Record — DESIGN ENGINEER — MM/DD/YY DATE

DESIGNED: XXX MM/YYYY | DRAWN: XXX MM/YYYY
CHECKED: XXX MM/YYYY | CHECKED: XXX MM/YYYY

INDIANA
DEPARTMENT OF TRANSPORTATION

BEAM DETAILS
AASHTO I-BEAM, TYPE II

SCALE	BRIDGE FILE
AS NOTED	057-14-000000
	DESIGNATION
	9999999
DRAWING	SHEET
C8 of C14	15 of 31
CONTRACT	PROJECT
B-99999	9999999

9 Title Block Text:
Labels: 10 Pt Text
Signature: 12 Pt Text

Plot: 4/4/2014 11:15 AM
DOTWise\Documents\Standards\Working Drawings\Structural\WChiles\Sample Plan Sheets\Std Beam Sheets\Sht Beam Details_01 alt wc.dgn

PURPOSE:

The purpose of this Beam Details sheet is to show the additional details information necessary for installation of the beams. This sheet is intended to be used in conjunction with the appropriate Standard Beam Details Sheet.

Typ. All Details:
Section Title: 18 Pt Text
Section Sub-Title: 14 Pt Text
Dimensions and Text Callouts: 12 Pt Text

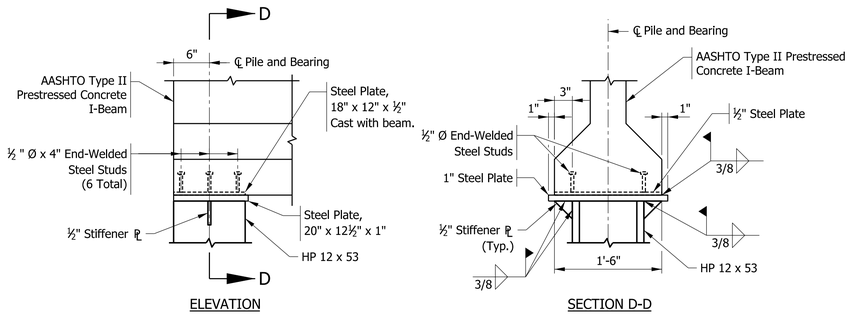

1 BEAM BEARING ASSEMBLY AT END BENT
Scale: 1" = 1'-0"

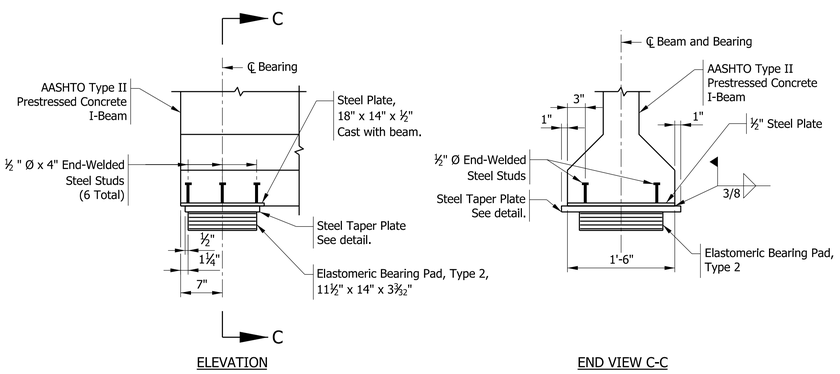

2 BEAM BEARING ASSEMBLY AT PIER
Scale: 1" = 1'-0"

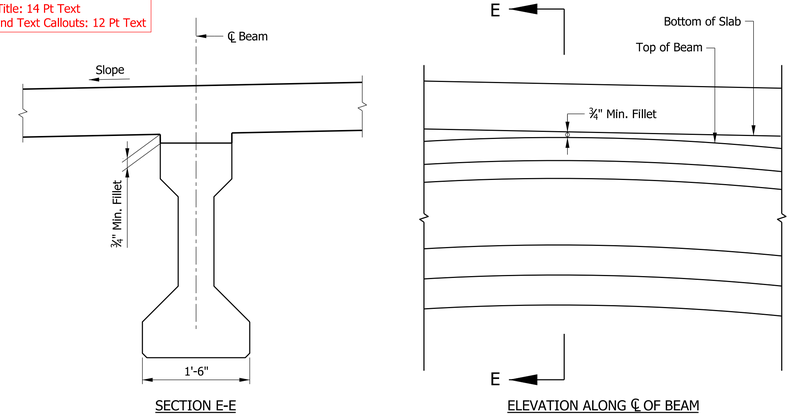

5 FILLET DETAIL
Scale: 1" = 1'-0"

Typ. Table:
Table Title: 18 Pt Text
Table Data: 12 Pt Text

9

TABLE OF CAMBERS (in.)

	SPAN A & C	SPAN B
Initial Camber	0.760	0.997
Dead Load Deflection	0.146	0.292
Residual Camber	0.614	0.705

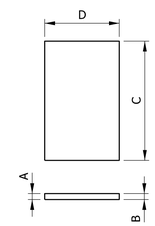

TAPER PLATE TABLE

Location	A	B	C	D
Pier No. 2 (Span A)	1"	1"	20"	12½"
Pier No. 2 (Span B)	1"	1"	20"	12½"
Pier No. 3 (Span A)	1"	1"	20"	12½"
Pier No. 3 (Span B)	1"	1"	20"	12½"

A = Back Station Side
B = Forward Station Side
Plates shall be vulcanized to elastomeric bearings.

3 TAPER PLATE DETAIL
Scale: 1" = 1'-0"

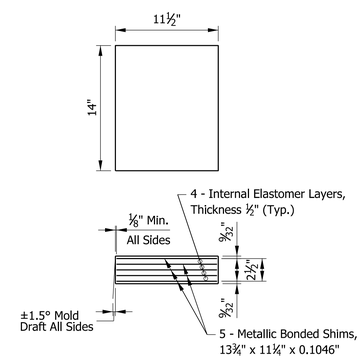

4 TYPE 2 ELASTOMERIC BEARING PAD DETAIL
Scale: 3" = 1'-0"

REQUIRED ELEMENTS:

1. Beam Bearing Assembly Details at End Bents
2. Beam Bearing Assembly Details at Piers
3. Taper Plate Detail (When Needed)
4. Elastomeric Bearing Pad Detail
5. Fillet Detail Including Section and Elevation
6. Camber Table
7. Notes
8. Signature Block and PE Seal

7 NOTES

1. For general beam notes and design data, see Drawing C8.
2. Bearing assemblies shall be included in the cost of structural members.

8

PE SEAL

RECOMMENDED FOR APPROVAL *Engineer of Record* MM/DD/YY
DESIGN ENGINEER DATE

DESIGNED: ABC 03/2013 DRAWN: PQR 03/2013
CHECKED: BCD 04/2013 CHECKED: RST 04/2013

INDIANA
DEPARTMENT OF TRANSPORTATION

BEAM DETAILS

SCALE	BRIDGE FILE
AS NOTED	057-14-000000
	DESIGNATION
	9999999
DRAWING	SHEET
C9 of C14	16 of 31
CONTRACT	PROJECT
B-99999	9999999

Plot: 4/4/2014 11:25 AM

DOTWise\Documents\Standards\Working Drawings\Structural\WChiles\Sample Plan Sheets\Bridge Project\0001250\Design\MS\Sht Beam Details_02 alt wc.dgn

Title Block Text:
Labels: 10 Pt Text
Signature: 12 Pt Text

PURPOSE:

The purpose of these Superstructure Details sheets is to show physical dimensions and pertinent information necessary for the contractor to construct the bridge deck.

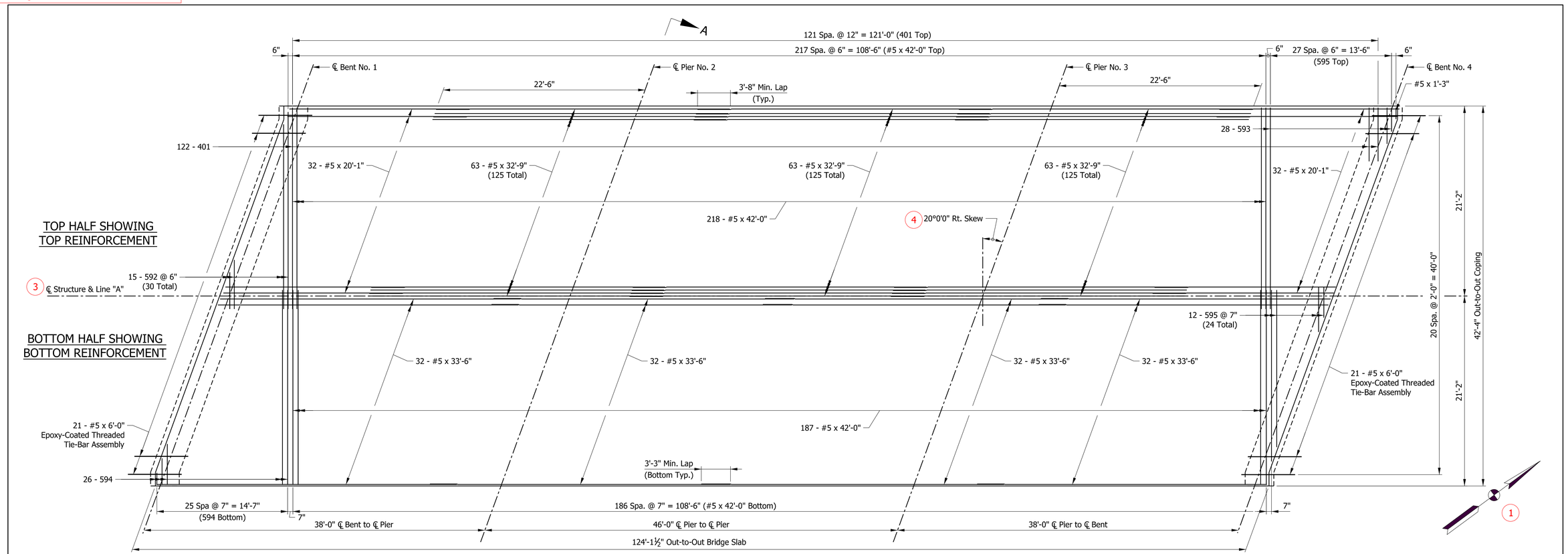

2 FLOOR PLAN
Scale: 3/16" = 1'-0"

Typ. All Views and Sections:
Section Title: 18 Pt Text
Section Sub-Title: 14 Pt Text
Dimensions and Text Callouts: 12 Pt Text

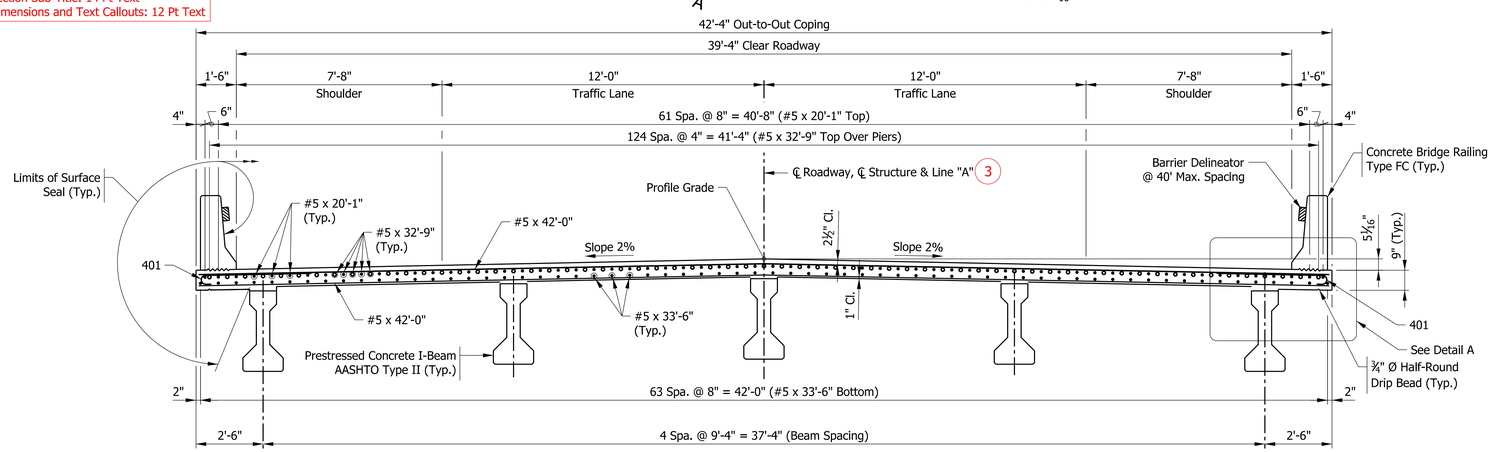

5 TYPICAL SECTION
Scale: 3/8" = 1'-0"

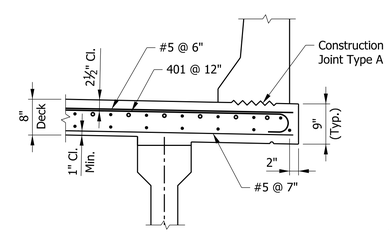

6 DETAIL A
SCALE: ¾" = 1'-0"

REQUIRED ELEMENTS:

1. North Arrow
2. Deck Floor Plan
3. Line Designation
4. Skew Angle
5. Typical Section
6. Details as Needed
7. Notes
8. Signature Block and PE Seal

7 NOTES

1. All reinforcing bars shall be epoxy-coated.
2. For Section A-A, see Drawing C11.
3. For reinforcing bar bending diagrams, see Drawing C11.
4. The top reinforcing in the deck shall be securely tied down to the deck forms and/or beams to prevent lifting during concrete placement.
5. Suitable restraint shall be provided to prevent the rotation of the exterior beams from construction load such as finishing machine, forms, etc.

Title Block Text:
Labels: 10 Pt Text
Signature: 12 Pt Text

8

PE SEAL

RECOMMENDED FOR APPROVAL — Engineer of Record — DESIGN ENGINEER — MM/DD/YY DATE

DESIGNED: ABC 03/2013 | DRAWN: PQR 03/2013
CHECKED: BCD 04/2013 | CHECKED: RST 04/2013

INDIANA
DEPARTMENT OF TRANSPORTATION

SUPERSTRUCTURE DETAILS

SCALE	BRIDGE FILE
AS NOTED	057-14-000000
	DESIGNATION
	9999999
DRAWING	SHEET
C10 of C14	17 of 31
CONTRACT	PROJECT
B-99999	9999999

Plot: 2/28/2014 4:09 PM

DOTWise\Documents\Standards\Working Drawings\Structural\WChiles\Sample Plan Sheets\Bridge Project\0001250\Design\MS\Sht Superstructure Details_01 wc.dgn

PURPOSE:

The purpose of these Superstructure Details sheets is to show physical dimensions and pertinent information necessary for the contractor to construct the bridge deck.

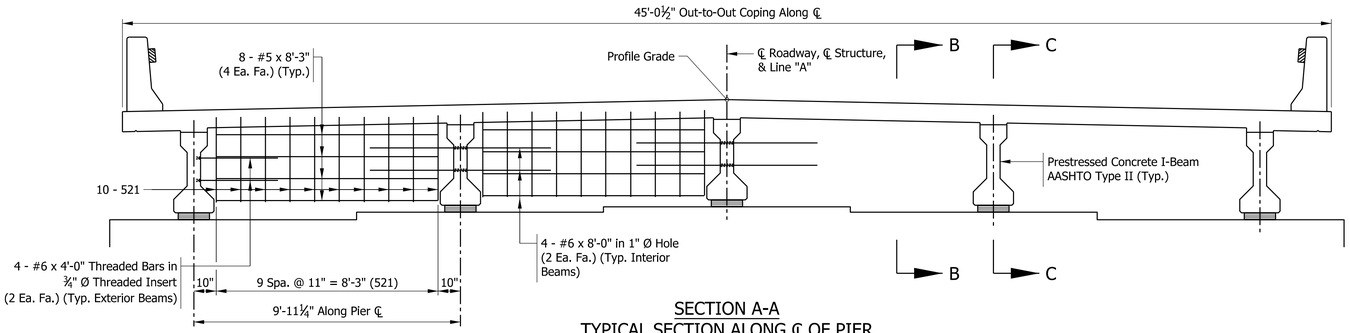

1 SECTION A-A
TYPICAL SECTION ALONG ℄ OF PIER
Scale: ⅜" = 1'-0"

Typ. All Views and Sections:
Section Title: 18 Pt Text
Section Sub-Title: 14 Pt Text
Dimensions and Text Callouts: 12 Pt Text

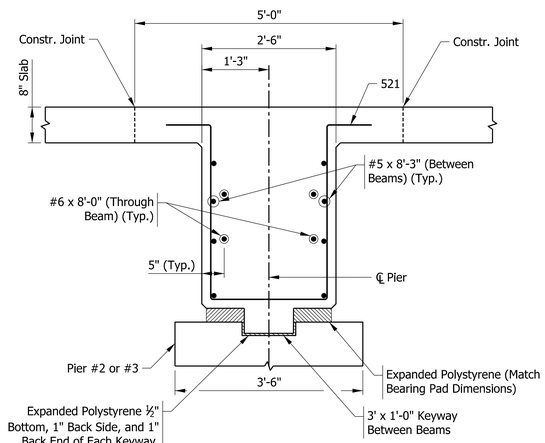

2 SECTION B-B
Scale: ¾" = 1'-0"

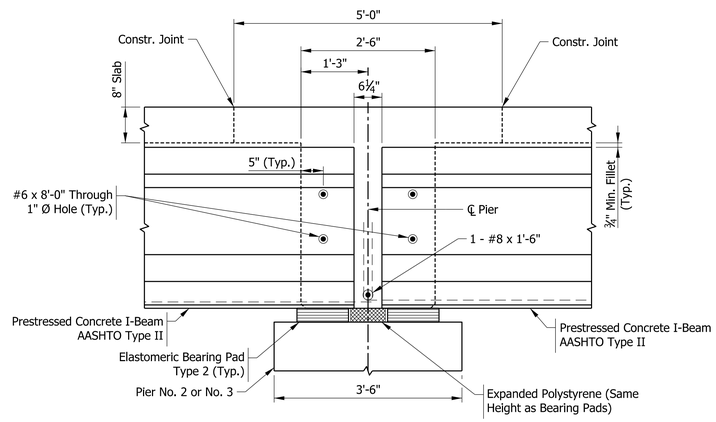

3 SECTION C-C
Scale: ¾" = 1'-0"

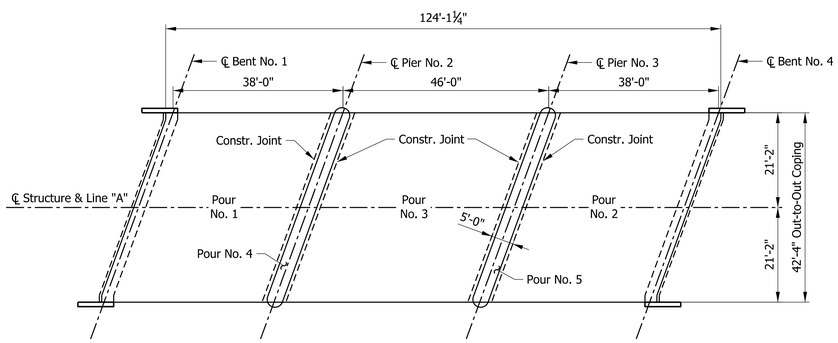

4 POUR SEQUENCE DIAGRAM
Scale: 1/16" = 1'-0"

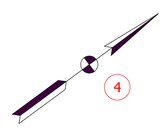

4 POUR NOTES

1. Pour numbers indicate sequence of pours.
2. Pours over interior supports shall be made last to reduce the effect of the slab dead load in the negative moment area.
3. Pours No. 4 and No. 5 will include the diaphragms at the supports and shall be held to a 5-ft length.

When the construction is to be phased, Bills of Materials should be separated by phase.

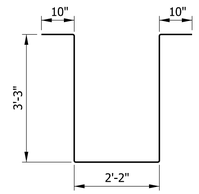

521 x 10'-4"

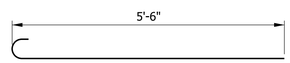

401 x 6'-0"

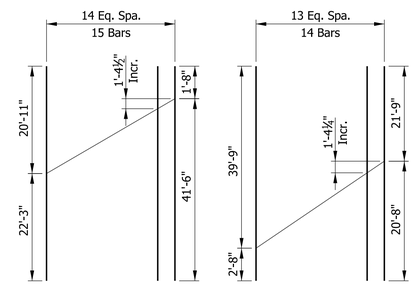

592 x 43'-2" 593 x 42'-5"

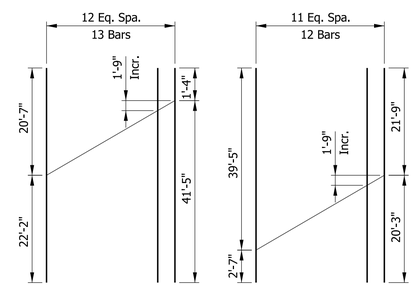

594 x 42'-9" 595 x 42'-0"

5 BAR BENDING DETAILS
Not to Scale

Show bar mark and total length of bar, rounded to nearest 1 in.

Typ. All Bar Bending Diagrams:
Title: 18 Pt Text
Bar Mark Title: 14 Pt Text
Dimensions and Text Callouts: 12 Pt Text
See IDM 405-2.0 for guidance regarding detailing reinforcing steel.

6 BILL OF MATERIALS SUPERSTRUCTURE

EPOXY-COATED REINFORCING BARS			
SIZE & MARK	NO. OF BARS	LENGTH (FT - IN.)	WEIGHT (LB)
#8	10	1' - 6"	
		Total #8	40
#6	24	8' - 0"	
#6	16	4' - 0"	
		Total #6	385
521	80	10' - 4"	
592	15	43' - 2"	
593	14	42' - 5"	
594	13	42' - 9"	
595	12	42' - 0"	
#5	256	33' - 6"	
#5	375	32' - 9"	
#5	405	42' - 0"	
#5	128	20' - 1"	
#5	64	8' - 3"	
#5	1	1' - 3"	
		Total #5	45991
401	244	6' - 0"	
		Total #4	978
Total Epoxy-Coated Reinforcing Bars			47394
CONCRETE			
Pour No. 1 & No. 2	2 @ 121.0 Cys		242.0 Cys
Pour No. 3	1 @ 43.5 Cys		43.5 Cys
Pour No. 4 & No. 5	2 @ 18.9 Cys		37.7 Cys
Total Concrete, Class C			323.2 Cys
MISCELLANEOUS			
#5 x 6'-0" Epoxy-Coated Threaded Tie-Bar Assembly			42 Ea
Surface Seal			7192 Sft

Bar bending diagrams are not shown to scale. However, they should be drawn to approximate proportions.

REQUIRED ELEMENTS:

1. Typical Section along CL of Pier Showing Diaphragm Reinforcing
2. Section Between Beams
3. Section Through Beams
4. Pour Diagram with North Arrow and Pour Notes
5. Reinforcing Bar Bending Details and Cutting Diagrams
6. Bill of Materials
7. Notes
8. Signature Block and PE Seal

7 NOTES

1. All reinforcing bars shall be epoxy-coated.
2. For Reinforcing Bar Notes, see Standard Drawing E 703-BRST-01.

8

Title Block Text:
Labels: 10 Pt Text
Signature: 12 Pt Text

PE SEAL

RECOMMENDED FOR APPROVAL — Engineer of Record — DESIGN ENGINEER — MM/DD/YY DATE

DESIGNED: ABC 03/2013 DRAWN: PQR 03/2013
CHECKED: BCD 04/2013 CHECKED: RST 04/2013

INDIANA
DEPARTMENT OF TRANSPORTATION

SUPERSTRUCTURE DETAILS

SCALE	BRIDGE FILE
AS NOTED	057-14-000000
	DESIGNATION
	9999999
DRAWING	SHEET
C11 of C14	18 of 31
CONTRACT	PROJECT
B-99999	9999999

Plot: 2/28/2014 4:09 PM

DOTWise\Documents\Standards\Working Drawings\Structural\WChiles\Sample Plan Sheets\Bridge Project\0001250\Design\MS\Sht Superstructure Details_02 wc.dgn

PURPOSE:

The purpose of this Railing Details sheet is to show physical dimensions, reinforcing, and pertinent information necessary for the contractor to construct the bridge railing and bridge railing transitions.

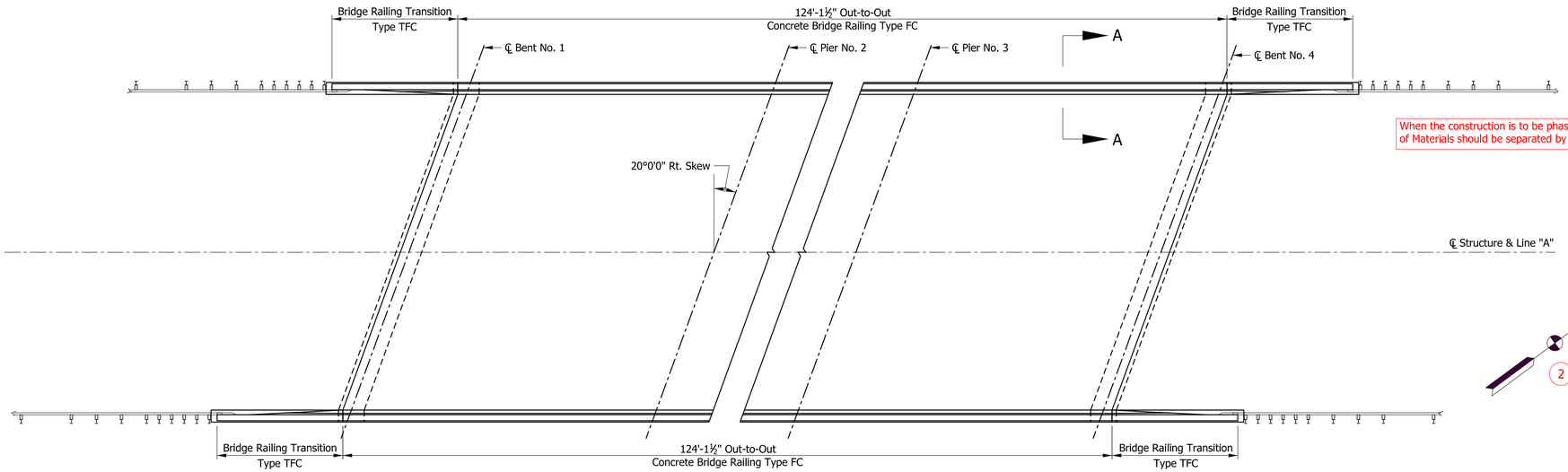

1 RAILING PLAN
Scale: ⅛" = 1'-0"

When the construction is to be phased, Bills of Materials should be separated by phase.

6

BILL OF MATERIALS
BRIDGE RAILING

EPOXY-COATED REINFORCING BARS			
SIZE & MARK	NO. OF BARS	LENGTH (FT - IN.)	WEIGHT (LB)
571E	372	5' - 6"	
572E	744	3' - 0"	
#5E	64	33' - 6"	
		Total #5	6698
Total from Railing Transition Type TFC (551 Lbs x 4)			2204
Total Epoxy-Coated Reinforcing Bars			8902
CONCRETE			
Railing Type FC			23.7 Cys
Railing Transition Type TFC (1.2 Cys x 4)			4.8 Cys
Total Concrete, Class C			28.5 Cys
MISCELLANEOUS			
Barrier Delineators			12 Ea
Concrete Bridge Railing Transition Type TFC			4 Ea
Surface Seal			400 Sft

2

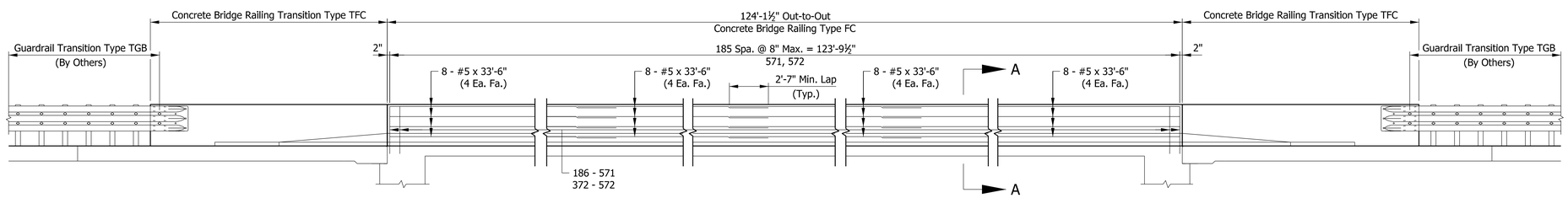

3 ELEVATION - ROADWAY SIDE
Scale: ¼" = 1'-0"

Typ. All Views and Sections:
Section Title: 18 Pt Text
Section Sub-Title: 14 Pt Text
Dimensions and Text Callouts: 12 Pt Text

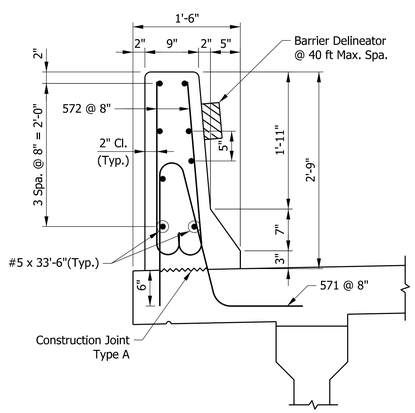

4 SECTION A-A
Scale: 1" = 1'-0"

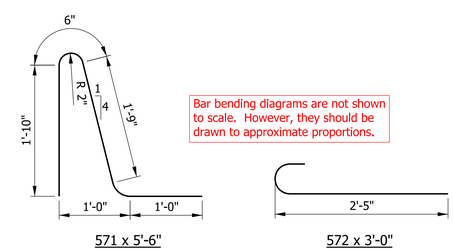

Bar bending diagrams are not shown to scale. However, they should be drawn to approximate proportions.

5 BAR BENDING DETAILS
Not to Scale

Show bar mark and total length of bar, rounded to nearest 1 in.

Typ. All Bar Bending Diagrams:
Title: 18 Pt Text
Bar Mark Title: 14 Pt Text
Dimensions and Text Callouts: 12 Pt Text
See IDM 405-2.0 for guidance regarding detailing reinforcing steel.

REQUIRED ELEMENTS:

1. Railing Plan
2. North Arrow
3. Elevation(s) showing Dimensions and Reinforcing for Bridge Railing and Bridge Railing Transitions
4. Section(s) Showing Dimensions and Reinforcing
5. Reinforcing Bar Bending Details
6. Bill of Materials
7. Notes
8. Signature Block and PE Seal

7 NOTES

1. All reinforcing bars shall be epoxy-coated.
2. For Reinforcing Bar Notes, see Standard Drawing E 703-BRST-01.
3. For details of Concrete Bridge Railing Transition, Type TFC, see Standard Drawings E 706-TTFC-01 through -03.
4. For additional details of Concrete Bridge Railing, Type FC, see Standard Drawings E 706-BRSF-01 and -03.

8

Title Block Text:
Labels: 10 Pt Text
Signature: 12 Pt Text

PE SEAL

RECOMMENDED FOR APPROVAL — Engineer of Record — DESIGN ENGINEER — MM/DD/YY DATE

DESIGNED: ABC 03/2013 DRAWN: PQR 03/2013
CHECKED: BCD 04/2013 CHECKED: RST 04/2013

INDIANA
DEPARTMENT OF TRANSPORTATION

RAILING DETAILS

SCALE	BRIDGE FILE
AS NOTED	057-14-000000
	DESIGNATION
	9999999
DRAWING	SHEET
C12 of C14	19 of 31
CONTRACT	PROJECT
B-99999	9999999

Plot: 3/7/2014 10:49 AM

DOTWise\Documents\Standards\Working Drawings\Structural\WChiles\Sample Plan Sheets\Bridge Project\0001250\Design\MS\Sht Railing Details wc.dgn

PURPOSE:

The purpose of this Screed Details sheet is to provide elevations for setting forms in order to place the floor slab and coping.

REQUIRED ELEMENTS:

1. Plan
2. North Arrow
3. Transverse Section
4. Table of Screed Elevations
5. Concrete Dead Load Deflection Diagram
6. Procedure and Notes
7. Signature Block and PE Seal

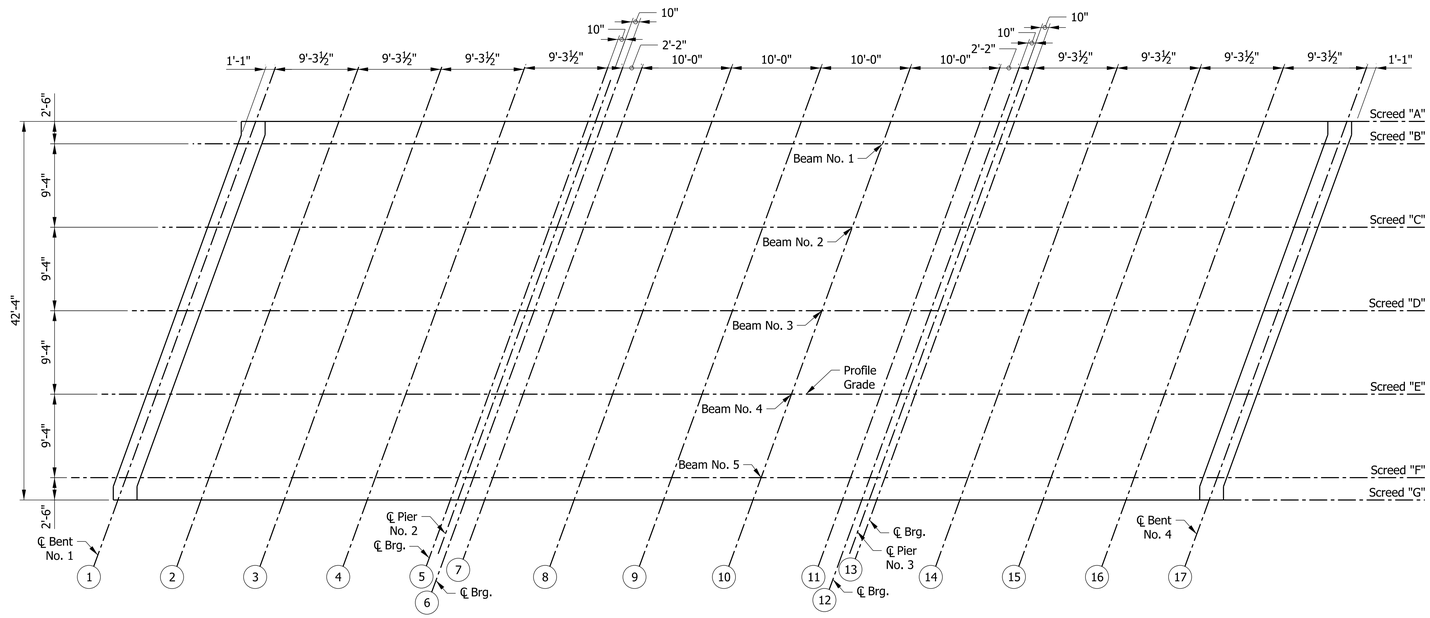

1 PLAN OF SCREEDS
Scale: ⅛" = 1'-0"

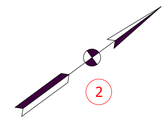

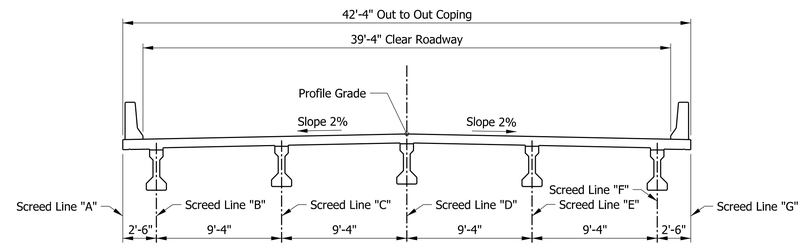

3 TYPICAL SECTION
Scale: 3/16" = 1'-0"

Typ. All Views and Sections:
Section Title: 18 Pt Text
Section Sub-Title: 14 Pt Text
Dimensions and Text Callouts: 12 Pt Text

See *IDM* 404-2.02(01) for information related to determination of screed elevations and development of the Plan of Screeds.

4 TABLE OF SCREED ELEVATIONS

		POINT:	1	2	3	4	5	6	7	8	9	10	11	12	13	14	15	16	17
SCREED LINE	A	Top of Coping Form	465.215	465.275	465.325	465.355	465.375	465.380	465.390	465.435	465.455	465.460	465.410	465.435	465.435	465.435	465.425	465.400	465.365
		Top of Exterior Beam																	
		Top of Beam to Top of Coping																	
	B	Top of Coping Form	465.260	465.320	465.370	465.400	465.425	465.430	465.440	465.480	465.510	465.510	465.490	465.490	465.485	465.490	465.480	465.455	465.420
		Top of Exterior Beam																	
		Top of Beam to Top of Coping																	
	C	Top of Coping Form	465.420	465.480	465.535	465.570	465.595	465.600	465.610	465.655	465.680	465.685	465.670	465.665	465.665	465.670	465.665	465.640	465.610
		Top of Exterior Beam																	
		Top of Beam to Top of Coping																	
	D	Top of Coping Form	465.585	465.655	465.705	465.745	465.770	465.775	465.790	465.835	465.865	465.870	465.860	465.855	465.855	465.865	465.860	465.840	465.805
		Top of Exterior Beam																	
		Top of Beam to Top of Coping																	
	E	Top of Coping Form	465.375	465.445	465.500	465.540	465.570	465.575	465.590	465.635	465.670	465.680	465.670	465.665	465.665	465.675	465.675	465.655	465.625
		Top of Exterior Beam																	
		Top of Beam to Top of Coping																	
	F	Top of Coping Form	465.170	465.245	465.300	465.345	465.375	465.380	465.395	465.445	465.480	465.495	465.485	465.485	465.485	465.500	465.495	465.480	465.455
		Top of Exterior Beam																	
		Top of Beam to Top of Coping																	
	G	Top of Coping Form	465.115	465.190	465.245	465.290	465.320	465.330	465.340	465.395	465.430	465.440	465.435	465.435	465.435	465.450	465.450	465.435	465.405
		Top of Exterior Beam																	
		Top of Beam to Top of Coping																	

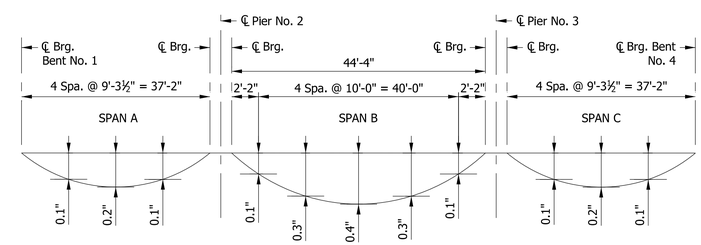

5 CONCRETE DEAD LOAD DEFLECTION DIAGRAM
Scale: Not to Scale

See *IDM* 405-3.02 for information related to computation of slab dead-load deflections and development of the diagram.

6 PROCEDURE AND NOTES

1. After beams are set, take elevations at all screed points on top of beams. Enter these elevations in the table. Subtract these elevations from the tabulated elevations and use the resulting dimensions as the height for setting screed forms above these points. These dimensions remain constant regardless of how much or in what order the concrete is poured.
2. Do not set screed forms by leveling.
3. No concrete in the floor slab shall be poured until the above operations are completed.
4. Screed elevations as shown in the table include an allowance for concrete dead load deflections.
5. For General Notes, see Drawing C2.

7

Title Block Text:
Labels: 10 Pt Text
Signature: 12 Pt Text

PE SEAL

RECOMMENDED FOR APPROVAL — Engineer of Record — DESIGN ENGINEER — MM/DD/YY DATE

DESIGNED: ABC 03/2013 | DRAWN: PQR 03/2013
CHECKED: BCD 04/2013 | CHECKED: RST 04/2013

INDIANA
DEPARTMENT OF TRANSPORTATION

SCREEDS

SCALE	BRIDGE FILE
AS NOTED	057-14-000000
	DESIGNATION
	9999999
DRAWING	SHEET
C13 of C14	20 of 31
CONTRACT	PROJECT
B-99999	9999999

Plot: 2/28/2014 4:20 PM

DOTWise\Documents\Standards\Working Drawings\Structural\WChiles\Sample Plan Sheets\Bridge Project\0001250\Design\MS\Sht Screed wc.dgn

PURPOSE:

The purpose of this Approach Slab Details sheet is to provide all necessary dimensions and reinforcing details needed to construct the bridge approach slab.

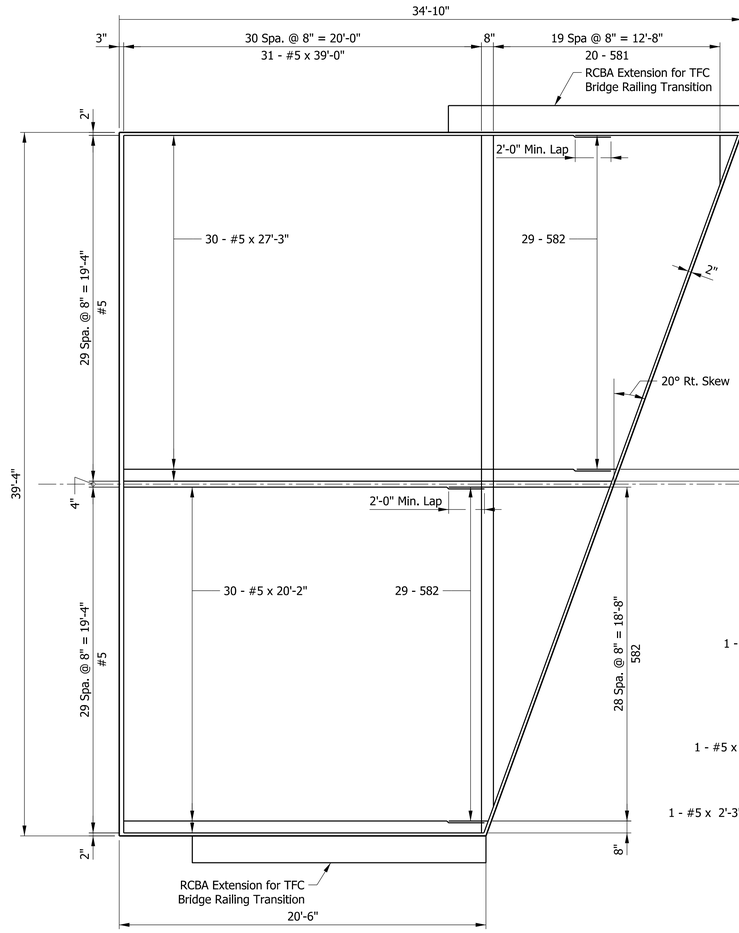

APPROACH SLAB AT END BENT NO. 1
2 PLAN SHOWING TOP REINFORCEMENT
Scale: ¼" = 1'-0"

Typ. All Views and Sections:
Section Title: 18 Pt Text
Section Sub-Title: 14 Pt Text
Dimensions and Text Callouts: 12 Pt Text

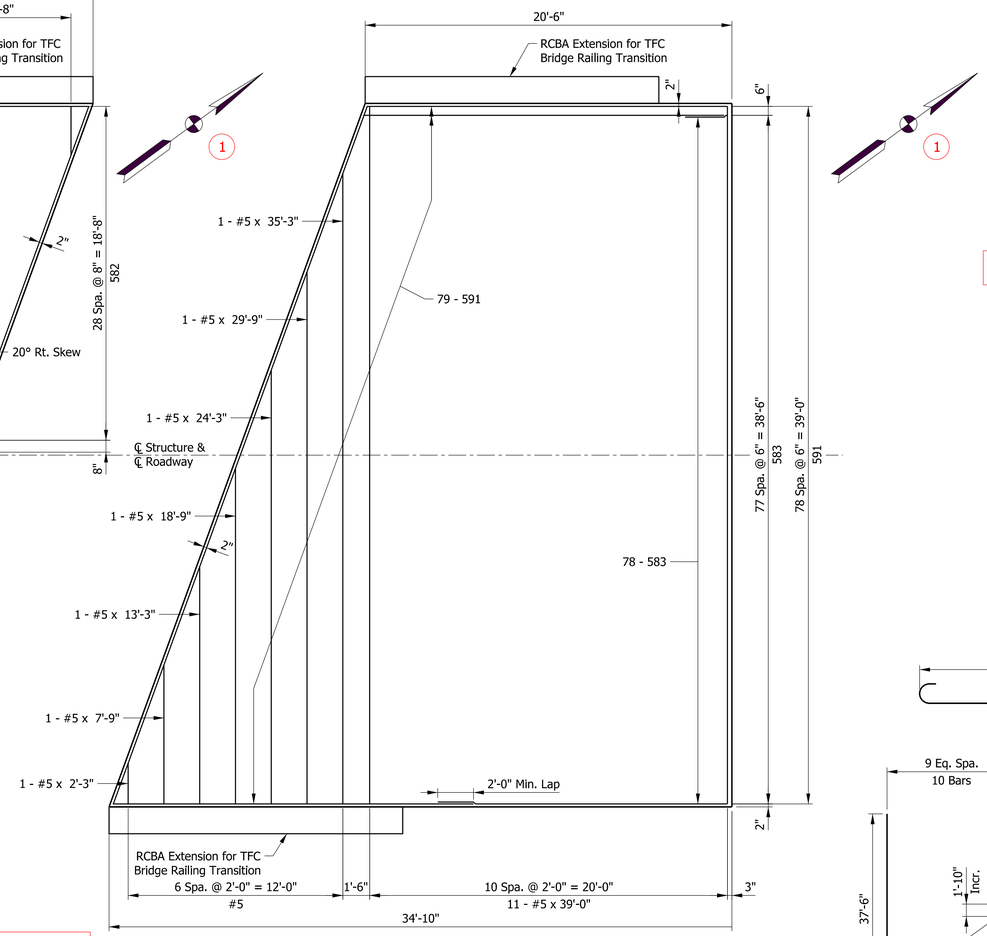

APPROACH SLAB AT END BENT NO. 4
2 PLAN SHOWING BOTTOM REINFORCEMENT
Scale: ¼" = 1'-0"

5

BILL OF MATERIALS
R.C. BRIDGE APPROACH
(END BENT NO. 1 AND NO. 4 SAME)

EPOXY-COATED REINFORCING BARS			
SIZE & MARK	NO. OF BARS	LENGTH (FT - IN.)	WEIGHT (LB)
581	10	40' - 3"	
582	29	11' - 3"	
583	39	18' - 6"	
591	79	20' - 9"	
#5	31	39' - 0"	
#5	1	35' - 3"	
#5	1	29' - 9"	
#5	30	27' - 3"	
#5	1	24' - 3"	
#5	30	20' - 2"	
#5	1	18' - 9"	
#5	1	13' - 3"	
#5	1	7' - 9"	
#5	1	2' - 3"	
		Total #5	6103
Total from RCBA Extension (269 Lbs x 2)			538
Total Epoxy-Coated Reinforcing Bars			6641
CONCRETE			
RCBA, 12"			120.9 Sys
RCBA Extension (2.7 Sys x 2)			5.4 Sys
Total RCBA			126.3 Sys
MISCELLANEOUS			
Dense Graded Subbase			20.2 Cys
Terminal Joint			39.3 Lft
Surface Seal			1088 Sft

When the construction is to be phased, Bills of Materials should be separated by phase.

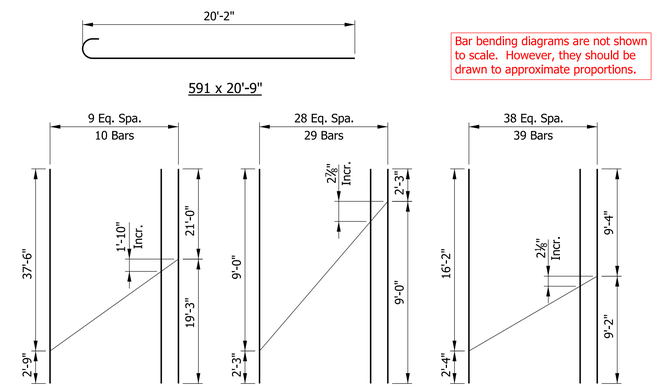

Bar bending diagrams are not shown to scale. However, they should be drawn to approximate proportions.

4 BAR BENDING DETAILS
Not to Scale

Show bar mark and total length of bar, rounded to nearest 1 in.

Typ. All Bar Bending Diagrams:
Title: 18 Pt Text
Bar Mark Title: 14 Pt Text
Dimensions and Text Callouts: 12 Pt Text
See IDM 405-2.0 for guidance regarding detailing reinforcing steel.

REQUIRED ELEMENTS:

1. North Arrow
2. Approach Slab Plan
3. Section
4. Reinforcing Bar Bending Details and Cutting Diagrams
5. Bill of Materials
6. Notes
7. Signature Block and PE Seal

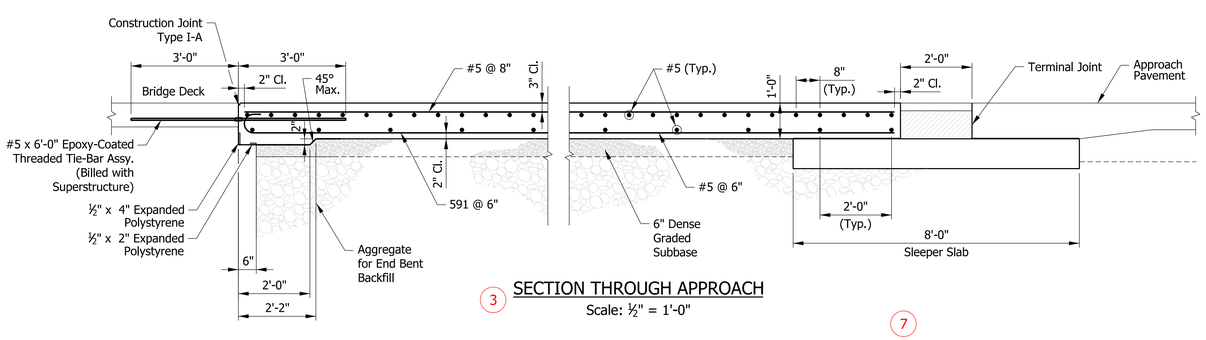

3 SECTION THROUGH APPROACH
Scale: ½" = 1'-0"

6 NOTES

1. For General Notes, see Drawing C2.
2. For details of RCBA Extension for TFC, see Standard Drawing E 609-TBAE-01. Thickness shall match approach slab thickness of 12".
3. For Reinforcing Bar Notes, see Standard Drawing E 703-BRST-01.
4. All reinforcing bars in approach slab shall be epoxy-coated.
5. RCBA shall be surface sealed.

7

Title Block Text:
Labels: 10 Pt Text
Signature: 12 Pt Text

PE SEAL

RECOMMENDED FOR APPROVAL — Engineer of Record — DESIGN ENGINEER — MM/DD/YY DATE

DESIGNED: ABC 03/2013 | DRAWN: PQR 03/2013
CHECKED: BCD 04/2013 | CHECKED: RST 04/2013

INDIANA
DEPARTMENT OF TRANSPORTATION

APPROACH SLAB DETAILS

SCALE	BRIDGE FILE
AS NOTED	057-14-000000
	DESIGNATION
	9999999
DRAWING	SHEET
C14 of C14	21 of 31
CONTRACT	PROJECT
B-99999	9999999

Plot: 3/7/2014 11:00 AM

DOTWise\Documents\Standards\Working Drawings\Structural\WChiles\Sample Plan Sheets\Bridge Project\0001250\Design\MS\Sht Approach Slab Details_01 wc.dgn

PURPOSE:

The purpose of this Bridge Summary sheet is to summarize quantities by superstructure, substructure elements, and approach structure for the bridge.

1

SUMMARY OF BRIDGE QUANTITIES

ITEM	CONCRETE CLASS C SUPERSTR	CONCRETE CLASS A SUBSTR	CONCRETE CLASS B ABOVE FTG.	CONCRETE CLASS B IN FTG.	CONCRETE RAILING CLASS C	REINF. BARS	REINF. BARS, EPOXY COATED	RAILING STEEL	TIE-BAR ASSY. EPOXY COATED	BARRIER DELIN-EATORS	CONC. BRIDGE RAIL TRANSITION TFC	R. C. BRIDGE APPROACH (SIZE)	DENSE GRADED SUBBASE	AGGR. FOR END BENT BACKFILL	GEO-TEXTILE	TERMINAL JOINT	ANCHOR PLATES MK-AP	PILES STEEL H (12 x 53)	PILES STEEL H (12 x 74)	PILES STEEL H EPOXY COATED	PILES PILE SHOE (12 x 53)	PILES PILE SHOE (12 x 74)	TEST PILE PRODUCTION 12 x 53	TEST PILE PRODUCTION 12 x 74	TEST PILE TEST PILE, DYNAMIC RESTRIKE	TEST PILE CORED HOLE IN ROCK		CONC. STR. MEMBERS BOX BEAM TYPE & SIZE	CONC. STR. MEMBERS I-BEAM TYPE II	* * SURFACE SEAL
	CYS	CYS	CYS	CYS	CYS	LBS	LBS	LFT	EACH	EACH	EACH	SYS	CYS	CYS	SYS	LFT	EACH	LFT	LFT	LFT	EACH	EACH	LFT	LFT	EACH	NO.	LFT	LFT	LFT	SFT
Superstructure	323.2						47393		42																				610	7192
End Bent No. 1							4713							40.2	38			420			5									
Pier No. 2		96		6		18743													490	80		8		80	1					
Pier No. 3		96		6		18743													560	80		8								
End Bent No. 4							4713							40.2	38			312			5		88		1					
R. C. Bridge Approach (12") at End Bent No. 1							13282					252.6	20.2			79														1088
R. C. Bridge Approach (12") at End Bent No. 4							13282					252.6	20.2			79														1088
Concrete Bridge Railing, Type FC					28.5		8902			12	2																			400
TOTALS	323.2	192			28.5	37486	92285		42	12	2	505.2	40.4	80.4	76	158		732	1050	160	10	16	88	80	2				610	9768

Typ. Table:
Table Title: Text Height = 0.25"
Table Data: 12 Pt Text

REQUIRED ELEMENTS:

1. Summary of Bridge Quantities Table
2. Signature Block and PE Seal

3

Title Block Text:
Labels: 10 Pt Text
Signature: 12 Pt Text

PE SEAL

RECOMMENDED FOR APPROVAL — Engineer of Record — DESIGN ENGINEER — MM/DD/YY DATE

DESIGNED: ABC 03/2013 DRAWN: PQR 03/2013

CHECKED: BCD 04/2013 CHECKED: RST 04/2013

INDIANA
DEPARTMENT OF TRANSPORTATION

BRIDGE SUMMARY

SCALE	BRIDGE FILE
N/A	057-14-000000
	DESIGNATION
	9999999
	SHEET
	22 of 31
CONTRACT	PROJECT
B-99999	9999999

Plot: 3/7/2014 11:26 AM

DOTWise\Documents\Standards\Working Drawings\Structural\WChiles\Sample Plan Sheets\Bridge Project\0001250\Design\MS\Sht Bridge Summary wc.dgn

PURPOSE:

The purpose of this Road Summary sheet is to summarize quantities for the project in addition to the bridge structure itself.

1 PAVEMENT QUANTITIES AND APPROACH TABLE

LOCATION	DESCRIPTION (APPROACH TYPE OR CLASS)	WIDTH	LENGTH	RADII	DISTANCE BEYOND R/W LINE	SURFACE BEYOND R/W LINE: COMPACTED AGGREGATE BASE	SURFACE BEYOND R/W LINE: HMA	SURFACE BEYOND R/W LINE: PCCP	GRADE 1	GRADE 2	EXCAVATION: CUT	EXCAVATION: FILL	HMA FOR APPROACHES (LBS PER SYD): SURFACE	HMA FOR APPROACHES (LBS PER SYD): INTERMED	HMA FOR APPROACHES (LBS PER SYD): BASE	HMA FOR ROADS (LBS PER SYD): SURFACE QC/QA, 2, 64	HMA FOR ROADS (LBS PER SYD): INTERMED QC/QA, 2, 64	HMA FOR ROADS (LBS PER SYD): SURFACE QC/QA, 3, 70	HMA FOR ROADS (LBS PER SYD): INTERMED QC/QA, 3, 64	HMA FOR ROADS (LBS PER SYD): SURFACE TYPE A	HMA FOR ROADS (LBS PER SYD): INTERMED TYPE A	SEAL COAT TYPE —	ASPHALT MATERIAL: PRIME COAT	ASPHALT MATERIAL: TACK COAT	COMPACTED AGGREGATE FOR BASE NO. 53 (DEPTH 6"):		COMPACTED AGGREGATE FOR SURFACE NO.73 (DEPTH):		LIQUID ASPHALT SEALANT	JOINT ADHESIVE SURFACE	JOINT ADHESIVE INTERMEDIATE	SUBGRADE TREATMENT TYPE IB	SUBGRADE TREATMENT TYPE III	REMARKS
		FT	FT	FT	FT	SYS	SYS	SYS	%	%	CYS	CYS	TONS	TONS	TONS	TONS	TONS	TONS	TONS	TONS	TONS		SYS	SYS	TONS	TONS	TONS	TONS	LFT	LFT	LFT	SYS	SYS	
																165	330	165	275	165	275													
SR 57 Line "A"											5848	9691				218	262	203	405					5104	1577				3963	3963	3963	4543		
Temporary Runaround											564	2356								317	529			3845	1315								4807	
TOTALS											6412	12047				218	262	203	405	317	529			8949	2892				3963	3963	3963	4543	4807	

2 STRUCTURE DATA TABLE

STRUCTURE NUMBER	LOCATION: STATION	LEFT	CROSS	RIGHT	SIZE (IN.)	PIPE TYPE	MANHOLE, INLET, CATCH BASIN, OR SPECIALTY STRUCTURE AND TYPE	LENGTH (LFT)	SKEW	FLOW LINE: COVER (FT)	FLOW LINE: UP STREAM (ELEV.)	FLOW LINE: DOWN STREAM (ELEV.)	SERVICE LIFE (YR)	SITE DESIGNATION	pH	BACKFILL METHOD	STRUCTURE BACKFILL: TYPE	STRUCTURE BACKFILL: CYS	REVETMENT RIPRAP (TONS)	CONCRETE, CLASS A, FOR STR. (CYS)	VIDEO INSPECTION (LFT)	PIPE END SECTION (EA.)	GRATED BOX END SECTION: TYPE	GRATED BOX END SECTION: SLOPE	GRATED BOX END SECTION: EA.	SAFETY METAL END SECTION: TYPE	SAFETY METAL END SECTION: SLOPE	SAFETY METAL END SECTION: EA.	REMARKS
2	1445 + 89.00	X			6	1		60																					6" End Bent Drain Pipe
	End Bent No. 1																												
3	1447 + 11.00			X	6	1		60																					6" End Bent Drain Pipe
	End Bent No. 4																												

3 PERMANENT EROSION CONTROL SUMMARY TABLE

LOCATION: FROM STATION	TO STATION	LEFT	CROSS	RIGHT	PAVEMENT SIDE DITCH: ACTUAL LENGTH (LFT)	CUT OFF WALLS (8 FT EQUAL LENGTH EACH) (EACH)	TOTAL EQUIVALENT PAY LENGTHS TYPE (LFT)	(LFT)	(LFT)	(LFT)	(LFT)	RIPRAP DITCH: RIPRAP, REVETMENT (TONS)	RIPRAP, UNIFORM (TONS)	GEOTEXTILES (SYS)	SODDING: FOR PAVED SIDE DITCHES (SYS)	FOR DITCHES (SYS)	FOR MEDIAN (SYS)	FOR SHOULDER BREAK (SYS)	SODDING AT BRIDGE CONE (SYS)	TOTAL SODDING (SYS)	NURSERY SODDING FOR LAWNS (SYS)
1440 + 50	1441 + 00	X			50.0																
1441 + 00	1445 + 60.28	X			460.28																
1447 + 39.72	1452 + 00	X			460.28										639.0					639.0	
1452 + 00	1452 + 50	X			50.0																
1440 + 50	1441 + 00			X	25.0																
1441 + 00	1445 + 60.28			X	460.28																
1447 + 39.72	1452 + 00			X	460.28										639.0					639.0	
1442 + 00	1452 + 50			X	50.0																
Bridge Cone												605.0		925.0					48.0	48.0	
Riprap Drainage Turnouts												71.0		142.0					42.5	42.5	
TOTALS												676.0		1067.0	1278.0				90.5	1368.5	

4 GUARDRAIL SUMMARY TABLE

LOCATION: FROM STATION	TO STATION	LEFT	MEDIAN LEFT	MEDIAN RIGHT	RIGHT	W-BEAM GUARDRAIL LENGTH: STANDARD POST AT 6 FT 3 IN. SPA. (LFT)	STANDARD POST AT 3 FT 1.5 IN. SPA. (LFT)	DOUBLE FACED AT 6 FT 3 IN. SPA. (LFT)	DOUBLE FACED AT 3 FT 1.5 IN. SPA. (LFT)	SHOP CURVED AT ___ FT. SPA. (LFT)	NESTING GUARDRAIL (EACH)	GUARDRAIL FLARE RATE	GUARDRAIL TRANSITION TYPE TGB (EACH)	GUARDRAIL TRANSITION TYPE ___ (EACH)	GUARDRAIL END TREATMENT TYPE OS (EACH)	CURVED W-BEAM GUARDRAIL SYSTEM: TERMINAL SYSTEM (TYPE)	TERMINAL SYSTEM (EACH)	CONNECTOR SYSTEM (TYPE)	CONNECTOR SYSTEM (EACH)	GUARDRAIL REMOVE (LFT)	GUARDRAIL RESET (LFT)	IMPACT ATTENUATOR TYPE ___ (EACH)	IMPACT ATTENUATOR TYPE ___ (EACH)	REMARKS
1444 + 64.62	1445 + 99.78	X																		135				
1445 + 30.04	1445 + 55.04	X				25.0							1		1									
1446 + 89.69	1448 + 29.88	X																		140				
1447 + 59.28	1449 + 46.78	X				187.5							1		1									
1444 + 67.18	1445 + 99.78				X															133				
1443 + 53.22	1445 + 40.72				X	187.5							1		1									
1446 + 89.69	1448 + 24.93				X															135				
1447 + 44.96	1447 + 69.96				X	25.0							1		1									
TOTALS						425.0							4		4					543				

7 UNDERDRAIN TABLE

STATION: LT	RT		LONGITUDINAL DRAINS: 4 IN. TYPE 4 PIPE (FT)	6 IN. TYPE 4 PIPE (FT)	8 IN. TYPE 4 PIPE (FT)	AGGREGATE FOR UNDERDRAINS (CYS)	GEOTEXTILES FOR UNDERDRAINS (SYS)	OUTLET PIPES: AT STATION	45° ELLS (EA.)	WYE (EA.)	4 IN. PVC PIPE (FT)	6 IN. PVC PIPE (FT)	8 IN. PVC PIPE (FT)	B-BORROW FOR STR. BACKFILL (CYS)	OUTLET PROTECTOR, TYPE A (EACH)	OUTLET PROTECTOR, TYPE B (EACH)	DELINEATOR POST (EACH)	SODDING (SYS)	CONNECT TO STR. NO.	REMARKS
TOTALS																				

6 R/W MARKER TABLE

STATION	OFFSET
1440 + 50	+PL Rt.
1440 + 50	65' Rt.
1445 + 00	107' Rt.
1448 + 00	107' Rt.
1452 + 50	50' Rt.
1452 + 50	+PL Rt.
1440 + 50	+PL Lt.
1440 + 50	75' Lt.
1445 + 00	113' Lt.
1448 + 00	113' Lt.
1452 + 50	60' Lt.
1452 + 50	+PL Lt.

5 MONUMENT TABLE

STATION	OFFSET	MONUMENT
1441 + 00.00	0.00 RT	Type B
1445 + 96.99	21.72 LT	Benchmark Post
1445+00.00	0.00 RT	Type B

Typ. Table:
Table Title: Text Height = 0.25"
Table Data: 12 Pt Text

REQUIRED ELEMENTS:

1. Pavement Quantities and Approach Table
2. Structure Data Table
3. Permanent Erosion Control Summary Table
4. Guardrail Summary Table
5. Monument Table
6. R/W Marker Table
7. Underdrain Table, If Needed
8. Mailbox Approaches, If Needed
9. Signature Block and PE Seal

Note: All road summary tables have been shown on this sample for format and typical location only. Tables may be left off of plans for which there are no related quantities.

8 MAILBOX APPROACHES

LT./RT.	C/L BOX STATION	DESCRIPTION	WIDTH, W(FT)	ASSEMBLY REQ'D: SINGLE	DOUBLE	
		TOTAL				

Title Block Text:
Labels: 10 Pt Text
Signature: 12 Pt Text

PE SEAL

RECOMMENDED FOR APPROVAL — Engineer of Record — DESIGN ENGINEER — MM/DD/YY DATE

DESIGNED: ABC 03/2013 DRAWN: PQR 03/2013
CHECKED: BCD 04/2013 CHECKED: RST 04/2013

INDIANA DEPARTMENT OF TRANSPORTATION

ROAD SUMMARY

SCALE	BRIDGE FILE
N/A	057-14-000000
	DESIGNATION
	9999999
	SHEET
	23 of 31
CONTRACT	PROJECT
B-99999	9999999

Plot: 3/11/2014 9:48 AM

DOTWise\Documents\Standards\Working Drawings\Structural\WChiles\Sample Plan Sheets\Bridge Project\0001250\Design\MS\Sht Road Summary wc.dgn

PURPOSE:

The purpose of these Cross Sections sheets is to provide earthwork calculations and all supporting information.

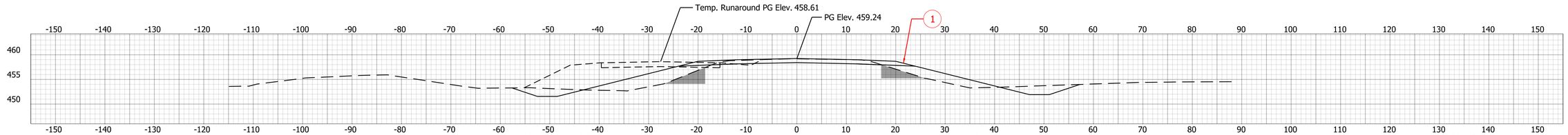

TEMPORARY RUNAROUND		MAINLINE		BENCHING
Ac = 7.1 SFT	Af = 43.7 SFT	Ac = 57.6 SFT	Af = 76.7 SFT	Ab = 26.2 SFT
Vc = 19 CYS	Vf = 116 CYS	Vc = 102 CYS	Vf = 126 CYS	Vb = 50 CYS

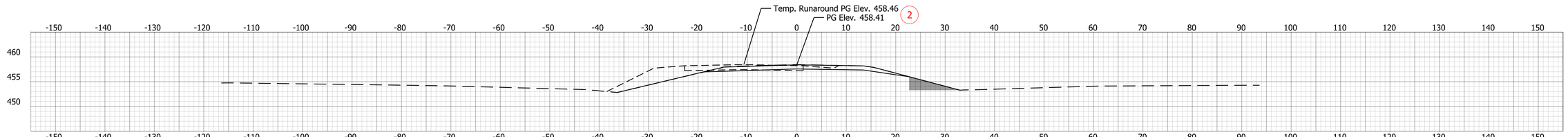

TEMPORARY RUNAROUND		MAINLINE		BENCHING
Ac = 19.0 SFT	Af = 37.3 SFT	Ac = 29.4 SFT	Af = 0.0 SFT	Ab = 14.0 SFT
Vc = 38 CYS	Vf = 45 CYS	Vc = 27 CYS	Vf = 0.0 CYS	Vb = 13 CYS

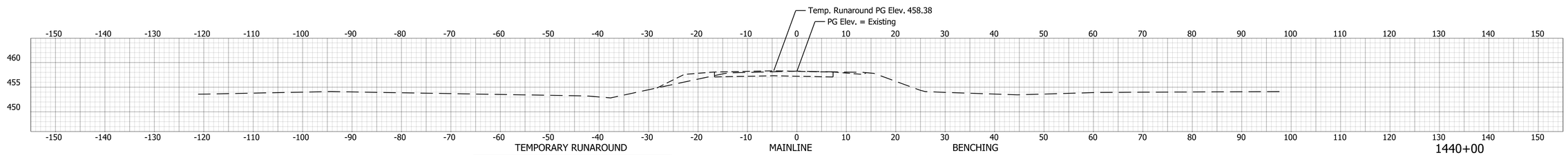

TEMPORARY RUNAROUND		MAINLINE		BENCHING
5 Ac = 21.9 SFT	Af = 11.2 SFT	5 Ac = 0.0 SFT	Af = 0.0 SFT	6 Ab = 0.0 SFT
Vc = 20 CYS	Vf = 10 CYS	Vc = 0 CYS	Vf = 0 CYS	Vb = 0 CYS

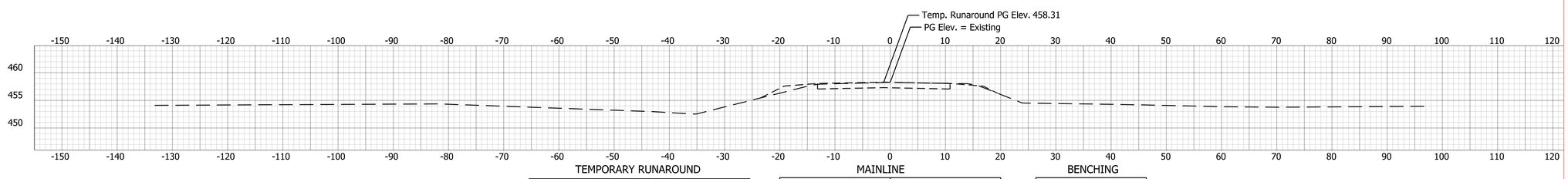

TEMPORARY RUNAROUND		MAINLINE		BENCHING
Ac = 0.0 SFT	Af = 0.0 SFT	Ac = 0.0 SFT	Af = 0.0 SFT	Ab = 0.0 SFT
Vc = 0 CYS	Vf = 0 CYS	Vc = 0 CYS	Vf = 0 CYS	Vb = 0 CYS

Typ. All Cross Sections:
Cross Section Station: 18 Pt Text
Grid Axis Labels: 12 Pt Text
Dimensions and Text Callouts: 12 Pt Text

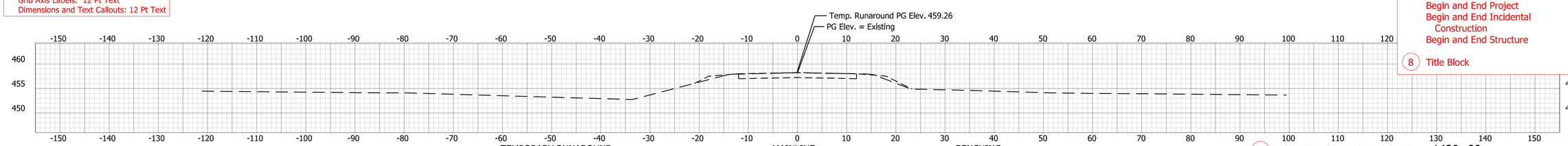

Typ. Earthwork Tables:
Table Title: 14 Pt Text
Table Data: 12 Pt Text

TEMPORARY RUNAROUND		MAINLINE		BENCHING
Ac = 0.0 SFT	Af = 0.0 SFT	Ac = 0.0 SFT	Af = 0.0 SFT	Ab = 0.0 SFT
Vc = 0 CYS	Vf = 0 CYS	Vc = 0 CYS	Vf = 0 CYS	Vb = 0 CYS

REQUIRED ELEMENTS:

1. Templates of Typical Sections Placed on Existing Cross Sections
2. Profile-Grade Elevations
3. Mainline Drainage Structures
4. Approaches and Drives, When Needed
5. Earthwork Areas and Volumes
6. Benching Areas and Volumes
7. Label Stations for:
   Begin and End Temporary Runaround
   Begin and End Project
   Begin and End Incidental Construction
   Begin and End Structure
8. Title Block

Title Block Text:
Labels: 10 Pt Text

DESIGNED: ABC	03/2013	DRAWN: PQR	03/2013
CHECKED: BCD	04/2013	CHECKED: RST	04/2013

INDIANA
DEPARTMENT OF TRANSPORTATION

CROSS SECTIONS
LINE "A"

HORIZONTAL SCALE	BRIDGE FILE
1" = 10'	057-14-000000
VERTICAL SCALE	DESIGNATION
1" = 10'	9999999
	SHEET
	24 of 31
CONTRACT	PROJECT
B-99999	9999999

Plot: 3/4/2014 4:36 PM

DOTWise\Documents\Standards\Working Drawings\Structural\WChiles\Sample Plan Sheets\Bridge Project\0001250\Design\MS\Sht Xsec_50_01 wc.dgn

8

PURPOSE:

The purpose of these Cross Sections sheets is to provide earthwork calculations and all supporting information.

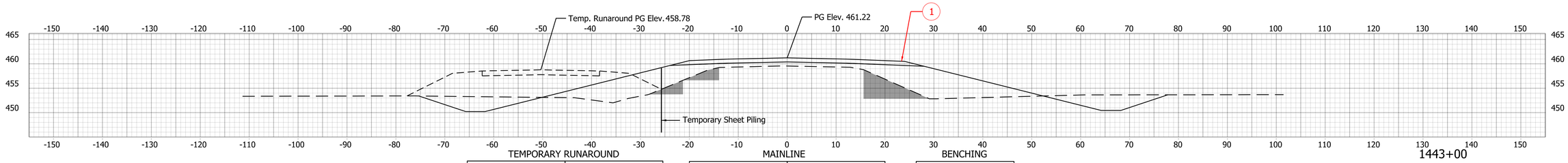

1443+00

TEMPORARY RUNAROUND		MAINLINE		BENCHING	
Ac = 0.0 SFT	Af = 152.6 SFT	Ac = 92.4 SFT	Af = 261.4 SFT	Ab = 61.0 SFT	
Vc = 0 CYS	Vf = 262 CYS	Vc = 155 CYS	Vf = 384 CYS	Vb = 102 CYS	

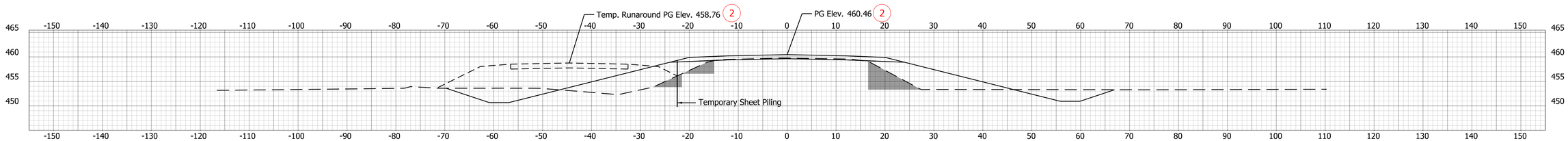

1442+50

TEMPORARY RUNAROUND		MAINLINE		BENCHING	
5 Ac = 0.0 SFT	Af = 130.6 SFT	5 Ac = 74.8 SFT	Af = 153.1 SFT	6 Ab = 48.9 SFT	
Vc = 24 CYS	Vf = 97 CYS	Vc = 258 CYS	Vf = 142 CYS	Vb = 49 CYS	

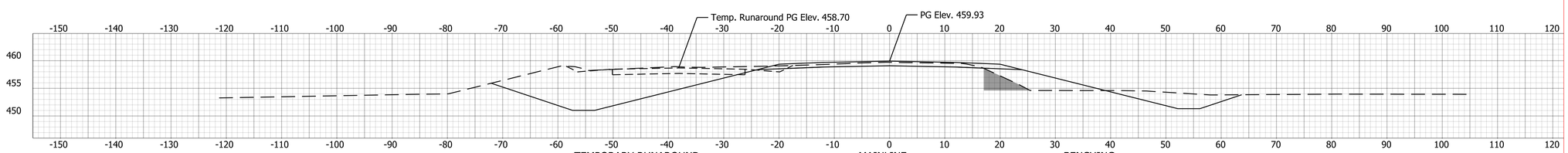

TEMPORARY RUNAROUND		MAINLINE		BENCHING	
Ac = 32.9 SFT	Af = 0.0 SFT	Ac = 273.6 SFT	Af = 38.2 SFT	Ab = 17.3 SFT	
Vc = 4 CYS	Vf = 0 CYS	Vc = 31 CYS	Vf = 4 CYS	Vb = 2 CYS	

REQUIRED ELEMENTS:

1. Templates of Typical Sections Placed on Existing Cross Sections
2. Profile-Grade Elevations
3. Mainline Drainage Structures
4. Approaches and Drives, When Needed
5. Earthwork Areas and Volumes
6. Benching Areas and Volumes
7. Label Stations for:
   Begin and End Temporary Runaround
   Begin and End Project
   Begin and End Incidental Construction
   Begin and End Structure
8. Title Block

Typ. All Cross Sections:
Cross Section Station: 18 Pt Text
Grid Axis Labels: 12 Pt Text
Dimensions and Text Callouts: 12 Pt Text

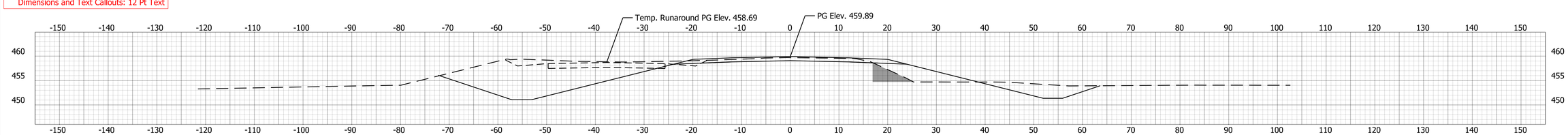

1441+50

Typ. Earthwork Tables:
Table Title: 14 Pt Text
Table Data: 12 Pt Text

TEMPORARY RUNAROUND		MAINLINE		BENCHING	
Ac = 41.5 SFT	Af = 0.0 SFT	Ac = 286.8 SFT	Af = 36.0 SFT	Ab = 16.9 SFT	
Vc = 51 CYS	Vf = 46 CYS	Vc = 364 CYS	Vf = 119 CYS	Vb = 45 CYS	

Title Block Text:
Labels: 10 Pt Text

DESIGNED: ABC	03/2013	DRAWN: PQR	03/2013
CHECKED: BCD	04/2013	CHECKED: RST	04/2013

INDIANA
DEPARTMENT OF TRANSPORTATION

CROSS SECTIONS
LINE "A"

HORIZONTAL SCALE	BRIDGE FILE
1" = 10'	057-14-000000
VERTICAL SCALE	DESIGNATION
1" = 10'	9999999
	SHEET
	25 of 31
CONTRACT	PROJECT
B-99999	9999999

Plot: 3/4/2014 4:38 PM

DOTWise\Documents\Standards\Working Drawings\Structural\WChiles\Sample Plan Sheets\Bridge Project\0001250\Design\MS\Sht Xsec_50_02 wc.dgn

8