THE EAST END CROSSING

(LOUISVILLE-SOUTHERN INDIANA OHIO RIVER BRIDGES PROJECT)

PUBLIC-PRIVATE AGREEMENT

BOOK 2
TECHNICAL PROVISIONS

ATTACHMENT 01-1
PROJECT MANAGEMENT PLAN

(This page intentionally blank.)

Project Management Plan contents and schedule for provision of the component parts.

Legend:

A = Approved by IFA prior to Commencement of Design
B = Approved by IFA prior to Commencement of Construction
C = Approved by IFA 180 days prior to Substantial Completion

Part	Section	Contents	Required by
1. Project Administration			
	Organization	Organizational diagram	A
	Personnel	Names and contact details, titles, and job roles	A
	Contractors	Contracting Plan	A
	Schedule	Design Submittal portion of the Baseline Project Schedule in accordance with Section 1	A
		Balance of Baseline Project Schedule in accordance with Section 1	B
	Quality Control	Procedures to establish and encourage continuous improvement	A
	Audit	Procedures to facilitate review and audit by IFA	A
		Auditing and management review of Developer's own activities under the PMP	A
		Auditing and management review of Contractor's activities and management procedures	A
	PMP Update	Procedures for preparation of amendments and submission of amendments to any part of the PMP	A
	Document Management	The manner in which records will be maintained in compliance with the Technical Provisions, including any specific systems Developer will use	A
		Document management procedures in compliance with Section 1	A
2. Quality Management Plan			
	Organization	Developer's main contractual arrangements	A
		Organizational structure covering the activities to be performed in accordance with the PPA Documents	A
	Personnel	Resource plan for the Developer and its Contractors	A
		Arrangements for coordinating and managing staff interaction with IFA and its consultants	A

Part	Section	Contents	Required by
		including collocation of Key Personnel and description of approach to coordinating work of off-site personnel	
		Names and contact details, titles, job roles and specific experience required for the Key Personnel and for other principal personnel during design	A
		Names and contact details, titles, job roles of principal personnel for Contractors and any third party with which Developer will coordinate activities	A
2A. Design QA/QC Plan			
	Organization	Developer's main contractual arrangements	A
		Organizational structure covering the activities to be performed in accordance with the PPA Documents	A
	Personnel	Resource plan for the Developer and its Contractors	A
		Arrangements for coordinating and managing staff interaction with IFA and its consultants including collocation of Key Personnel and description of approach to coordinating work of off-site personnel	A
		Names and contact details, titles, job roles and specific experience required for the Key Personnel and for other principal personnel during design	A
		Names and contact details, titles, job roles of principal personnel for Contractors and any third party with which Developer will coordinate activities	A
	Offices and equipment	Description of the necessary offices and office equipment to be provided by Developer during design	A
	Contractors	Overall control procedures for Contractors, including consultants and subconsultants	A
		Responsibility of Contractors and affiliates	A
		Steps taken to ensure Contractors and Suppliers meet the obligations imposed by their respective Contracts	A
	Interfaces	Interfacing between the Developer, Contractors and independent certifiers during design including interfaces between the structural design auditor, the safety auditor, and any quality reviewer	A
		Coordination with Utility Owners	A
	Environmental	Control of the interface between environmental requirements (including landscaping) and the design of the East End Crossing	A

Part	Section	Contents	Required by
	Procedures	Procedures describing how the principal activities will be performed during the design stage: to include geotechnical site investigation, surveys and mapping, environmental management, safety audit, structural audit, and checking	A
	Quality Control/Quality Assurance	Quality control and quality assurance procedures including a resource table for monitoring and auditing all design services, design review and certification, verification of plans	A
		Procedures for environmental compliance	A
		Procedures to establish Developer's hold points in design process where checking and review will take place	A
		Procedures to ensure accuracy, completion, and quality in submittals to IFA and Governmental Entities	A
		Procedures to establish and encourage continuous improvement	A
	Audit	Name of Developer's representative(s) with defined authority for establishing, maintaining, auditing and reporting on the PMP	A
		Name, title, roles and responsibilities of supporting quality management staff reporting to the person with defined authority	A
	Document Management	The manner in which records will be maintained in compliance with the Technical Provisions, including any specific systems Developer will use	A
		Document management procedures in compliance with Section 3	A
		Identify environmental documentation and reporting requirements for the Environmental Compliance Plan	A
2B. Construction QA/QC Plan			
	Organization	Developer's main contractual arrangements	A
		Organizational structure covering the activities to be performed in accordance with the PPA Documents	A
	Personnel	Resource plan for the Developer and its Contractors	B
		Arrangements for coordinating and managing staff interaction with IFA and its consultants including collocation of Key Personnel and description of approach to coordinating work of off-site personnel	B
		Names and contact details, titles, job roles and specific experience required for the Key Personnel as related to construction	A

Part	Section	Contents	Required by
		Names and contact details, titles, job roles of principal personnel for Contractors and any third party with which Developer will coordinate his activities	B
		Procedures for implementation of Environmental Compliance and Mitigation Training Program for all employees in accordance with Section 7.3	B
	Offices and equipment	Description of the necessary offices and office equipment to be provided by Developer during construction	A
	Contractors	Overall control procedures for Contractors, including consultants and subconsultants	B
		Responsibility of Contractors and affiliates	B
		Steps taken to ensure Contractors and Suppliers meet the obligations imposed by their respective Contracts	B
		Procedures for implementation of Environmental Compliance and Mitigation Training Program for employees of subcontractors in accordance with Section 7.3	B
	Interfaces	Interfacing between the Developer, Contractors and independent certifiers during construction, including any testing contractor	A
	Procedures	List of East End Crossing specific construction procedures	B
		Construction detailed procedure for each major activity whether directly undertaken or subcontracted to include pavement, structures, drainage, communications	B
		Construction Transportation Management Plan	B
	Quality Control/Quality Assurance	Construction Monitoring Plan	B
		Construction Monitoring Program (Environmental)	B
		Procedures for environmental compliance	
		Control, identification and traceability of materials, including any material or samples temporarily or otherwise removed from site for testing or other reasons.	B
		Examinations and audit of Construction Work, review of examination and audit, issue of certificates	B
		Observation and reporting of all tests in compliance with Section 3	B
		Procedures for tests and inspections for the purpose of the Contractor certifying that prior to burying, each part of the Works is complete and conforms to the PPA Documents.	B

Part	Section	Contents	Required by
		Quality control and quality acceptance procedures including a resource table for monitoring and auditing during construction any work and testing undertaken by Contractors and Suppliers both on and off Site	B
		Procedures to establish Developer's hold points in construction	B
		Procedures to ensure accuracy, completion, and quality in submittals to IFA and Governmental Entities	B
		Procedures to establish and encourage continuous improvement	A
	Audit	Inspection and test plans that identify the proforma and/or databases to be used for recording the inspection and test results and methodology for transmitting acceptance testing and inspection reports to IFA	B
		Name of Developer's representative with defined authority for establishing, maintaining, auditing and reporting on the PMP	A
		Name, title, roles and responsibilities of supporting quality management staff reporting to the person with defined authority	B
	Document Management	The manner in which records will be maintained in compliance with the Technical Provisions, including any specific systems Developer will use	B
		Document management procedures in compliance with Section 4	A
3. Environmental Management			
	Organization	Developer's main contractual arrangements	A
		Organizational structure covering the activities to be performed in accordance with the PPA Documents	A
		Environmental Contact Tree	A
	Personnel	Resource plan for the Developer and its Contractors	B
		Arrangements for coordinating and managing staff interaction with IFA and its consultants, including collocation of Key Personnel and description of approach to coordinating work of off-site personnel	A
		Names and contact details, titles, job roles and specific experience required for Key Personnel and for other environmental personnel	A
		Implement Environmental Compliance and Mitigation Training Program for all employees in accordance with Section 7.3	A

Part	Section	Contents	Required by
	Contractors	Overall control procedures for Contractors, including consultants and subconsultants	A
		Responsibility of Contractors and affiliates	A
	Environmental	Environmental Compliance and Mitigation Plan	B
		Sustainability Management Plan	A
		Spill Prevention Plan	B
		Hazardous Materials Management Plan	B
	Quality Control and Quality Acceptance	Procedures to ensure accuracy, completion, and quality in submittals to IFA and Governmental Entities	A
		Procedures to establish and encourage continuous improvement	A
		Procedures for environmental compliance	A
	Audit	Name, title, roles and responsibilities of supporting quality management staff reporting to the person with defined authority	B
	Document Management	The manner in which records will be maintained in compliance with the Technical Provisions, including any specific systems Developer will use	A
		Identify environmental documentation and reporting requirements	A
4. Public Involvement Plan			
	Organization	Developer's main contractual arrangements	A
		Organizational structure covering the activities to be performed in accordance with the PPA Documents	A
	Personnel	Resource plan for the Developer and its Contractors	A
		Arrangements for coordinating and managing staff interaction with IFA and its consultants, including collocation of Key Personnel and description of approach to coordinating work of off-site personnel	A
		Names and contact details, titles, job roles and specific experience required for Key Personnel and for other principal personnel	A
		Names and contact details, titles, job roles of principal personnel for Contractors and any third party with which Developer will coordinate his activities	A
	Offices and equipment	Description of the necessary offices and office equipment to be provided by Developer during design	A

Part	Section	Contents	Required by
	Contractors	Overall control procedures for Contractors, including consultants and subconsultants	A
		Responsibility of Contractors and affiliates	A
		Steps taken to ensure Contractors and Suppliers meet the obligations imposed by their respective Contracts	A
		Procedures for implementation of Environmental Compliance and Mitigation Training Program for employees of Contractors	A
	Interfaces	Community Outreach Plan in accordance with Section 6.3	A
		Procedures for liaison with the public, the media and other Customer Groups in accordance with Section 6 and the press media policy of IFA	A
		Procedures to coordinate with East End Crossing stakeholders such as municipalities, counties, MPOs, RMAs and other Customer Groups	A
	Procedures	Procedures describing how the principal activities will be performed	A
	Quality Control	Quality control procedures including a resource table for monitoring and auditing all public information and communication services	A
		Procedures to ensure accuracy, completion, and quality in submittals to IFA, Governmental Entities and Customer Groups	A
		Procedures to establish and encourage continuous improvement	A
	Audit	Name of Developer's representative with defined authority for establishing, maintaining, auditing and reporting on the PMP	A
		Name, title, roles and responsibilities of supporting quality management staff reporting to the person with defined authority	A
	Document Management	The manner in which records will be maintained in compliance with the Technical Provisions, including any specific systems Developer will use	A
		Document management procedures in compliance with the Technical Provisions Section 1	A
		Identify environmental documentation and reporting requirements	A
5. Safety Plan			
	Organization	Policies, plans, training programs, Work Site controls, and Incident response plans to ensure the health and safety of personnel involved in the East End Crossing and the general public affected by the East End Crossing	A

Part	Section	Contents	Required by
		Procedures for immediately notifying IFA of all incidents arising out of or in connection with the performance of the Work	A
	Personnel	Resource plan for the Developer and its Contractors	A
		Arrangements for coordinating and managing staff interaction with IFA and its consultants, including collocation of Key Personnel and description of approach to coordinating work of off-site personnel	A
		Names and contact details, titles, job roles and specific experience required for Key Personnel and for other principal personnel	A
		Names and contact details, titles, job roles of principal personnel for Contractors and any third party with which Developer will coordinate his activities	A
	Incident Management Plan	Incident Management Plan in compliance with the Technical Provisions Section 6.5.5	A
6. Communications Plan			
	The manner in which the Developer's organization will respond to unexpected requests for information, communicate changes or revisions to necessary Developer personnel, and notify affected stakeholders before and after changes are made		A
	Processes and procedures for communication of East End Crossing information between the Developer's organization and IFA.		A
7. Operations and Maintenance Plan			
	Organization	Developer's main contractual arrangements	A
		Organizational structure covering the activities to be performed in accordance with the PPA Documents	A
	Personnel	Resource plan for the Developer and its Contractors	A
		Arrangements for coordinating and managing staff interaction with IFA and its consultants, including collocation of Key Personnel and description of approach to coordinating work of off-site personnel	A
		Names and contact details, titles, job roles and specific experience required for the Key Personnel as related to Operations and Maintenance (O&M) activities.	A
		Names and contact details, titles, job roles of principal personnel for Contractors and any third party with which Developer will coordinate activities	A

Part	Section	Contents	Required by
	Contractors	Overall control procedures for Contractors, including consultants and subconsultants	A
		Responsibility of Contractors and affiliates	A
		Steps taken to ensure Contractors and Suppliers meet the obligations imposed by their respective Contracts	C
		Procedures for implementation of Environmental Compliance and Mitigation Training Program for employees of Contractors in accordance with Section 7.2	C
	Environmental	Control of the interface between environmental requirements (including Hazardous Materials and demolition) and Operations and Maintenance activities	C
		Applicable procedures for the Hazardous Materials Management Plan in accordance with Section 7.9.1	C
	Health and Safety	O&M Safety Plan in accordance with Section 22.1.7	C
	Quality Control	O&M Quality Plan in accordance with Section 22.1.8	C
		Procedures to ensure accuracy, completion, and quality in submittals to IFA and Governmental Entities	C
		Procedures to establish and encourage continuous improvement	C
		Quality control procedures and quality review standards in accordance with Section 22	C
		Procedures for environmental compliance	C
	Audit	Name, title, roles and responsibilities of supporting quality management staff reporting to the person with defined authority	A
	Document Management	The manner in which records will be maintained in compliance with the Technical Provisions, including any specific systems Developer will use	C
		Document management procedures in compliance with Section 22	C
		Identify environmental documentation and reporting requirements	C

Note – in this PMP Contents the term “Contractor” shall be taken to mean “Subcontractor”

THE EAST END CROSSING

(LOUISVILLE-SOUTHERN INDIANA OHIO RIVER BRIDGES PROJECT)

PUBLIC-PRIVATE AGREEMENT

BOOK 2
TECHNICAL PROVISIONS

ATTACHMENT 07-1
PERMITS AND STATUS

(This page intentionally blank.)

IFA-PROVIDED APPROVALS			
LOCATION	**APPROVAL NAME**	**ADMINISTERING AGENCY**	**ANTICIPATED APPROVAL DATE**
Project	2012 ROD	FHWA	Approved 06/20/2012
Structures 1, 11, & 12	2012 ROD Reevaluation	FHWA	12/31/2012
Kentucky Approach (Section 4)	Section 401 Water Quality Certification Permit Discharge of dredged or fill material into the Waters of the U.S. (Harrods Creek)	Kentucky Department of Water (KDOW)	4/1/2013
Kentucky Approach (Section 4)	Floodplain Construction Permit [The Floodplain Management Section of Louisville Metro require permits.] (Harrods Creek)	Metropolitan Sewer District in Louisville (MSD)	4/1/2013
Kentucky Approach (Section 4)	Section 404 Permit Discharge of dredged or fill material into the Waters of the U.S. (jurisdiction begins at OHWM). (Harrods Creek) Section 10 Bridge Permit Construction of all work, other than bridges or Causeways over Navigable Waters(below the OHW elevation). (Harrods Creek) (Combined application)	US Corps of Army Engineers (USACE)	4/1/2013
Kentucky Approach (Section 4)	Section 9 Bridge Permit Construction of Bridges or Causeways Over Navigable Waters of the U.S. (Harrods Creek)	United States Coast Guard (USCG)	4/1/2013
Kentucky Approach (Section 4)	Federal Permit for Eagle Take to Protect an Interest in a Particular Locality	US Fish and Wildlife Service (USFWS)	12/31/2012

IFA-PROVIDED APPROVALS			
LOCATION	**APPROVAL NAME**	**ADMINISTERING AGENCY**	**ANTICIPATED APPROVAL DATE**
East End Main Span Bridge (Section 5)	Construction In A Floodway [IC 14-28-1 Flood Control Act] Indiana IC 14-29-1 Navigable Waterways Act [covered by Construction in a Floodway permit] (Combined application)	Indiana Department of Natural Resources (IDNR), Div. of Water Indiana Department of Environmental Management (IDEM)	1/31/2013
East End Main Span Bridge (Section 5)	Section 401 Water Quality Certification Permit Discharge of dredged or fill material into the Waters of the U.S.	KDOW	1/31/2013
East End Main Span Bridge (Section 5)	Floodplain Construction Permit [The Floodplain Management Section of Louisville Metro require permits.]	MSD	1/31/2013
East End Main Span Bridge (Section 5)	Section 404 Permit Discharge of dredged or fill material into the Waters of the U.S. (jurisdiction begins at OHWM). Section 10 Bridge Permit Construction of all work, other than bridges or Causeways over Navigable Waters(below the OHW elevation). (Combined application)	USACE	1/31/2013
East End Main Span Bridge (Section 5)	Section 9 Bridge Permit Construction of Bridges or Causeways Over Navigable Waters of the U.S.	USCG	1/31/2013

IFA-PROVIDED APPROVALS			
LOCATION	**APPROVAL NAME**	**ADMINISTERING AGENCY**	**ANTICIPATED APPROVAL DATE**
East End Main Span Bridge (Section 5)	Aviation Lighting Permit [TC 56-50e APPLICATION FOR PERMIT TO CONSTRUCT OR ALTER A STRUCTURE] - for crane Aviation Lighting Permit [TC 56-50e APPLICATION FOR PERMIT TO CONSTRUCT OR ALTER A STRUCTURE] - for bridge (Combined application)	Kentucky Airport Zoning Commission (KAZC)	1/31/2013
East End Main Span Bridge (Section 5)	Tall Structure Permit [FAA FORM 7460-1, NOTICE OF PROPOSED CONSTRUCTION OR ALTERATION] - for crane Tall Structure Permit [FAA FORM 7460-1, NOTICE OF PROPOSED CONSTRUCTION OR ALTERATION] - for bridge (Combined application)	Fed. Aviation Admin. (FAA)	Approved 5/31/12. FAA issued determination of "No Hazard"
East End Main Span Bridge (Section 5) Indiana Approach (Section 6)	Section 401 Water Quality Certification Permit Discharge of dredged or fill material into the Waters of the U.S. (Combined application)	IDEM	Approved 8/14/12 with conditions.
Indiana Approach (Section 6)	Construction In A Floodway [IC 14-28-1 Flood Control Act]	IDNR, Div. of Water	4/1/2013
Indiana Approach (Section 6)	Indiana IC 14-29-1 Navigable Waterways Act [covered by Construction in a Floodway permit]	IDEM	4/1/2013
Indiana Approach (Section 6)	Section 404 Permit Discharge of dredged or fill material into the Waters of the U.S. (jurisdiction begins at OHWM).	USACE	4/1/2013

IFA-PROVIDED APPROVALS			
LOCATION	**APPROVAL NAME**	**ADMINISTERING AGENCY**	**ANTICIPATED APPROVAL DATE**
Indiana Approach (Section 6)	Tall Structure Permit [FAA FORM 7460-1, NOTICE OF PROPOSED CONSTRUCTION OR ALTERATION] - for crane Tall Structure Permit [FAA FORM 7460-1, NOTICE OF PROPOSED CONSTRUCTION OR ALTERATION] - for bridge (Combined application)	FAA	FAA Determination of No Hazard Received 05/31/2012

IFA-INITIATED APPROVALS[1]			
LOCATION	**APPROVAL NAME**	**ADMINISTERING AGENCY**	**MAJOR ENVIRONMENTAL APPROVAL DEADLINE**
Blank			
1. All IFA-Initiated Approvals are Major Environmental Approvals			

MAJOR ENVIRONMENTAL APPROVALS			
LOCATION	**APPROVAL NAME**	**ADMINISTERING AGENCY**	**MAJOR ENVIRONMENTAL APPROVAL DEADLINE**
Kentucky Approach (Section 4)	Erosion and Sediment Control Plan	MSD	28 days after receiving satisfactory submission
Kentucky Approach (Section 4)	Risk Management Plan (HAZMAT/Contamination)	Kentucky Division of Waste	28 days after receiving satisfactory submission
Kentucky Approach (Section 4)	Kentucky Pollution Discharge Elimination System	KDOW	28 days after receiving satisfactory submission
East End Main Span Bridge (Section 5)	Construction/Land Disturbance Storm Water Permitting (327 IAC 15-5, Rule 5) / NOI	IDEM	IDEM will respond to a submission within 28 days

MAJOR ENVIRONMENTAL APPROVALS			
LOCATION	**APPROVAL NAME**	**ADMINISTERING AGENCY**	**MAJOR ENVIRONMENTAL APPROVAL DEADLINE**
Indiana Approach (Section 6)	Construction/Land Disturbance Storm Water Permitting (327 IAC 15-5, Rule 5) / NOI	IDEM	IDEM will respond to a submission within 28 days

THE EAST END CROSSING

(LOUISVILLE-SOUTHERN INDIANA OHIO RIVER BRIDGES PROJECT)

PUBLIC-PRIVATE AGREEMENT

BOOK 2
TECHNICAL PROVISIONS

ATTACHMENT 09-02
LEVEL ONE DESIGN EXCEPTION - SUPERELEVATION

(This page intentionally blank.)

UNDER DEVELOPMENT

THE EAST END CROSSING

(LOUISVILLE-SOUTHERN INDIANA OHIO RIVER BRIDGES PROJECT)

PUBLIC-PRIVATE AGREEMENT

BOOK 2
TECHNICAL PROVISIONS

ATTACHMENT 09-03
LEVEL ONE DESIGN EXCEPTION – WB SR 265 SHOULDER

(This page intentionally blank.)

UNDER DEVELOPMENT

THE EAST END CROSSING

(LOUISVILLE-SOUTHERN INDIANA OHIO RIVER BRIDGES PROJECT)

PUBLIC-PRIVATE AGREEMENT

BOOK 2
TECHNICAL PROVISIONS

ATTACHMENT 09-04
LEVEL TWO DESIGN EXCEPTION – SALEM ROAD ISD

(This page intentionally blank.)

LEVEL TWO DESIGN EXCEPTION REQUEST

April 5, 2012
REV. April 25, 2012

MEMORANDUM

TO: John Wright JW 5/23/12
INDOT Manager, Roadway Services or Structural Services

THRU: Susan Gilbert Susan E. Gilbert 2012.05.23 10:26:21 -04'00'
INDOT Sr. Road Design Engineer Team Leader

THRU: Kevin Hetrick
INDOT Project Manager

THRU: Jim Hilton, CTS Jim Hilton
Deputy Project Manager

THRU: James M. Johnson, Beam, Longest, and Neff, LLC James M. Johnson Digitally signed by James M. Johnson DN: cn=James M. Johnson, o=Beam, Longest and Neff, LLC, ou=Transportation, email=jjohnson@b-l-n.com, c=US Date: 2012.04.25 10:59:21 -04'00'
Project Reviewer

FROM: American Structurepoint, Inc.
Development of Preliminary Road Plans and
ISD Analysis (attached)

SUBJECT: Design Exception Request for Intersection Sight Distance

Des. No.:	0201297
Route No. or Road Name:	LSIORB Project Section 6 SR 265 and Salem Road Structure No.: 265-10-9604

Transmitted, herewith, is a Design Exception request for the above referenced project. The documentation has been reviewed for compliance with the Design Exception requirements included in *Indiana Design Manual* Section 40-8.0. Based on the analysis of the substandard Level Two design feature, we believe that the design exception is justified and we therefore recommend approval.

Please note the original submittal has been revised to add corrective notes to Page 6; per comments received from INDOT.

Project Description

The proposed design consists of the construction of a new diamond interchange at SR 265 and Salem Road. Work will consist of new pavement construction. Salem Road will be constructed as an overpass to SR 265.

Design Feature

Eye Offset Location for Intersection Sight Distance

In accordance with Section 46-10.03(01) in the Indiana Design Manual, the assumed offset location of the eye is 18.0 ft behind the edge of the travel lane for a new or reconstruction project, or 14.5 ft for a 3R project.

Intersection Sight Distance for left turns from Ramp "SWR" and from Ramp "NER" onto Salem Road is not provided when the eye location is placed at the 4R criteria of 18.0 ft. The restriction is due to the horizontal sight distance restriction created by the bridge barrier and approach rail. The right-of-way provided in the area of the interchange results in the ramp junctions with Salem Road being placed fairly close to the overpass bridge structure.

To provide the 4R Criteria eye offset of 18.0 feet, the proposed bridge would need to be widened to provide a 12 foot shoulder on one side and a 14 foot shoulder on the other side.

Placement of the eye location at the 3R criteria of 14.5 ft provides the required Intersection Sight Distance.

Due to increased construction cost, a Level 2 design exception for Intersection Sight Distance is proposed.

D: Intersection Sight Distance

IN20050774
SR 265 Ohio Bridges
Des.No. 0810242

5. Intersection Sight Distance (ISD)

General Notes:

Design Speed ( ) = See Design Criteria under Roadway Design Calculations.

Eye Location (4R Project) = 18 feet behind the edge of travel lane

Height of Eye = 3.5 feet for passenger car

Height of Eye = 7.6 feet for single unit or combination truck (IDM Section 46-10.0)

Height of Object = 3.5 feet

ISD Formula and Figure are from Indiana Design Manual (IDM) Chapter 46 and Figure 46-10G and 46-10H

$ISD = 1.47(V_{major})(t_g + t_{af})$

V_{major} - Design speed of major road

t_g - Time gap for minor road vehicle to enter major road

t_{af} - Time Adjustment Factor for Additional Lanes:

Passenger Car - 0.5 s (each additional lane to be crossed by a turning vehicle)

Truck - 0.7 s (each additional lane to be crossed by a turning vehicle)

t_{af} - Time Adjustment Factor for Center Curb Width:

Proportionally based on the width of the center curb to the width of a standard 12' lane.

Passenger Car - 0.5 s for 12'

Truck - 0.7 s for 12'

Restricted Movement:

None - Turning right, turning left, and crossing a major road are permitted.

LT & RT only - Only left turn and right turn are allowed.

RT Only - Only right turn is permitted.

ISD Check:

LT - Looking right before turning left onto a major road.

RT - Looking left before turning right onto a major road.

RT2 - Looking left before turning right onto the TWLTL of the major road.

CrossA - Looking right before crossing a major road.

CrossB - Looking Left before crossing a major road.

LT MAJ - Looking forward before turning left from the major road.

LT MIN - Looking forward before turning left from the minor road.

5. Intersection Sight Distance (ISD)

Stop-Controlled Intersection (Chapter 46-10.03):

Movements for turning right, turning left, and crossing a major road will be checked for ISD based on Restricted Movement. The controlling scenario will be drawn on to plan sheets for analysis.

Left-Turn from the Major Road (Chapter 46-10.04):

The IDM states, "If stopping sight distance has been provided continously along the major road and if sight distance for stop control or yield control has been provided for each minor-road approach, sight distance will generally be adequate for left turns from the major roadway" and " the availability of sight distance for left turns from a divided highway should be checked because of the possibility of sight obstructions in the median". The proposed median shall maintain an adequate obstruction free sight triangle for this and other required intersection manuvers. Therefore, Left-Turns from the Major Road will only be checked at signalized intersections where protected left and right turn movements for the minor roadway exist.

Signalized Intersection (Chapter 46-10.05):

Movement for right turns will be checked for both the minor and major roadways to accommodate the possibility of unprotected manuvers.

Graphical Checks:

All sight triangles will be checked using the Single Unit Truck Intersection Sight Distance, however; the height of eye will be for that of the Passanger Car. This situation will yeild a worst case cenario. If this case provides adequate sight distance then the Intersection Sight Distance for both the Single Unit Truck and Passanger Car will be adequate. The vehicle is positioned behind the stop bar to provide an ideal situation. If this is not possible, the vehicle is then moved so the eye is located 18' from the edge of travel way.

BY: WRm DATE: 3/22/11
CHK: SB DATE: 07/27/11

AMERICAN STRUCTUREPOINT, INC.
Intersection Sight Distance

SHEET 7 of 7
JOB NO.2005.0774
Salem Road

5. Intersection Sight Distance (ISD)

Approach Information								Passenger Car				Single Unit Truck					
Minor (turning from)	Major (turning to)	Type	Restricted Movement	ISD Check	Design Speed (mph)	Add'l Lane Crossed (Each)	Center Curb Width (ft)	t_g (s)	t_{af} (s)	Calculated ISD (ft)	Design ISD (ft)	t_g (s)	t_{af} (s)	Calculated ISD (ft)	Design ISD (ft)	Design ISD (ft)	IS ISD OK?
Ramp NER	Salem Rd. Line "LS-1"	Stop Controlled	None	RT	45	0	0	6.5	—	430.0	430	8.5	—	562.3	565	565	Yes
				LT	45	1	8	7.5	0.8	551.3	555	9.5	1.2	705.6	710	710	~~No~~ Yes (a)
				CrossA	45	0	0	6.5	0.0	430.0	430	8.5	0.0	562.3	565	565	Yes
				CrossB	45	1	8	6.5	0.8	485.1	490	8.5	1.2	639.5	640	640	~~Yes~~ No (b)
Ramp SWR	Salem Rd. Line "LS-1"	Stop Controlled	None	RT	45	0	0	6.5	—	430.0	430	8.5	—	562.3	565	565	Yes
				LT	45	1	8	7.5	0.8	551.3	555	9.5	1.2	705.6	710	710	~~No~~ Yes (a)
				CrossA	45	0	0	6.5	0.0	430.0	430	8.5	0.0	562.3	565	565	Yes
				CrossB	45	1	8	6.5	0.8	485.1	490	8.5	1.2	639.5	640	640	~~Yes~~ No (b)
Salem Rd.	Patrol Rd.	Stop Controlled	None	RT	35	0	0	6.5	—	334.4	335	8.5	—	437.3	440	440	Yes
				LT	35	0	0	7.5	0.0	385.9	390	9.5	0.0	488.8	490	490	Yes
				CrossA	35	0	0	6.5	0.0	334.4	335	8.5	0.0	437.3	440	440	Yes
				CrossB	35	0	0	6.5	0.0	334.4	335	8.5	0.0	437.3	440	440	Yes

Note: Center Curb Width Includes 2' Curb Offset

REVIEWER NOTES:

(a) ISD is OK with eye at 18.0 ft. offset

(b) ISD is not met with eye at 18.0 ft. offset
ISD is OK with eye at 14.5 ft. offset

See graphical layouts, Pages 9 to 20

AMERICAN
STRUCTUREPOINT
INC.

7260 Shadeland Station, Indianapolis, Indiana 46256
TEL 317.547.5580 FAX 317.543.0270

www.structurepoint.com

M E M O R A N D U M

DATE: December 14, 2009

TO: Josh Cook

FROM: Will Lyon

RE: SR265 and Salem Road - ISD Issue

CC: Scott Sondles, Tom Bolte, Ed Spahr, Clint Sparks, Chris Ogg, Hatem Mekky

Upon closer review, American Structurepoint has discovered an Intersection Sight Distance Issue when stopped on Ramps "SER" and "NWR" and making the left turn movement. Structurepoint has identified 3 options below to resolve the situation but we recommend using Option 1.

Option 1

- Utilize a 14.5ft offset of the eye to edge of travel way (AASHTO Minimum Offset and Indiana Design Manual 3R Minimum Offset) – 14.5ft is also the anticipated stop bar location with an 8ft shoulder plus 6.5ft to eye location
  - Impacts
    - Will have to lower Salem Road profile
    - Will have to flare guardrail on end of bridge
    - Requires Level II Design Exception (Due to not using 18' offset to the eye location which is the 4R criteria)
  - Benefits to Option
    - Does not impact ramp profiles
    - Do not have to change bridge beam type; we can utilize a more cost effective structure type
    - Do not have to change bridge width to a wider, more expensive bridge with 12+ feet shoulders
    - Does not impact R/W
    - Requires minimum amount of plan adjustments
    - Most cost effective

Option 2

- Utilize 18ft offset of the eye to edge of travel way (Indiana Design Manual 4R Minimum Offset)

- Impacts
  - Will have to lower Salem Road profile; more than what we will have to do in Option 1
  - Will impact all ramp profiles
  - Will have to flare guardrail on end of bridge
  - Will have to change bridge beam type to a more costly alternative
  - Will have to widen bridge shoulders to 12+ feet
    - On one side of the bridge the shoulder would have to be 14' which is typically not accepted by INDOT
  - Adds additional costs to bridge; approximately $250,000 in bridge costs alone
- Benefits
  - Achieves required Intersection Sight Distance according to Indiana Design Manual 4R criteria

Option 3

- Do nothing and submit a Level II Design Exception.

Yours truly,

William S. Lyon

William S. Lyon, PE

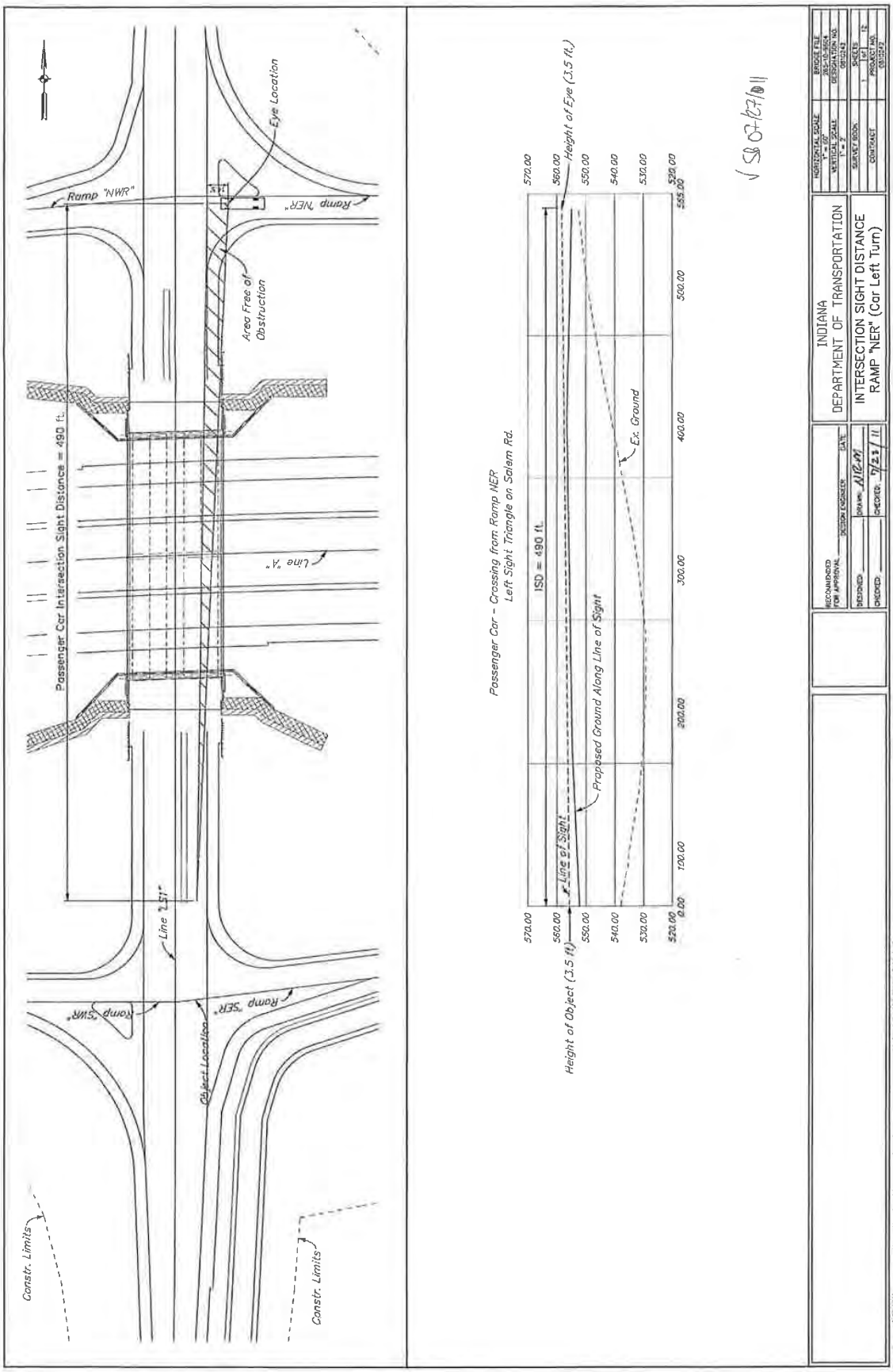
Passenger Car Intersection Sight Distance = 490 ft.
Ramp "NWR"
Ramp "NER"
Eye Location
Area Free of Obstruction
Line "A"
Line "B"
Ramp "SWR"
Ramp "SER"
Object Location
Constr. Limits
Constr. Limits
Passenger Car - Crossing from Ramp NER
Left Sight Triangle on Salem Rd.
ISD = 490 ft.
Height of Eye (3.5 ft.)
Ex. Ground
Proposed Ground Along Line of Sight
Line of Sight
Height of Object (3.5 ft.)
570.00
560.00
550.00
540.00
530.00
520.00
0.00
100.00
200.00
300.00
400.00
500.00
595.00
INDIANA
DEPARTMENT OF TRANSPORTATION
INTERSECTION SIGHT DISTANCE
RAMP "NER" (Car Left Turn)
RECOMMENDED FOR APPROVAL
DESIGN ENGINEER
DATE
DESIGNED
DRAWN
CHECKED
CHECKED
HORIZONTAL SCALE
VERTICAL SCALE
SURVEY BOOK
CONTRACT
BRIDGE FILE
DESIGNATION NO.
SHEETS
PROJECT NO.

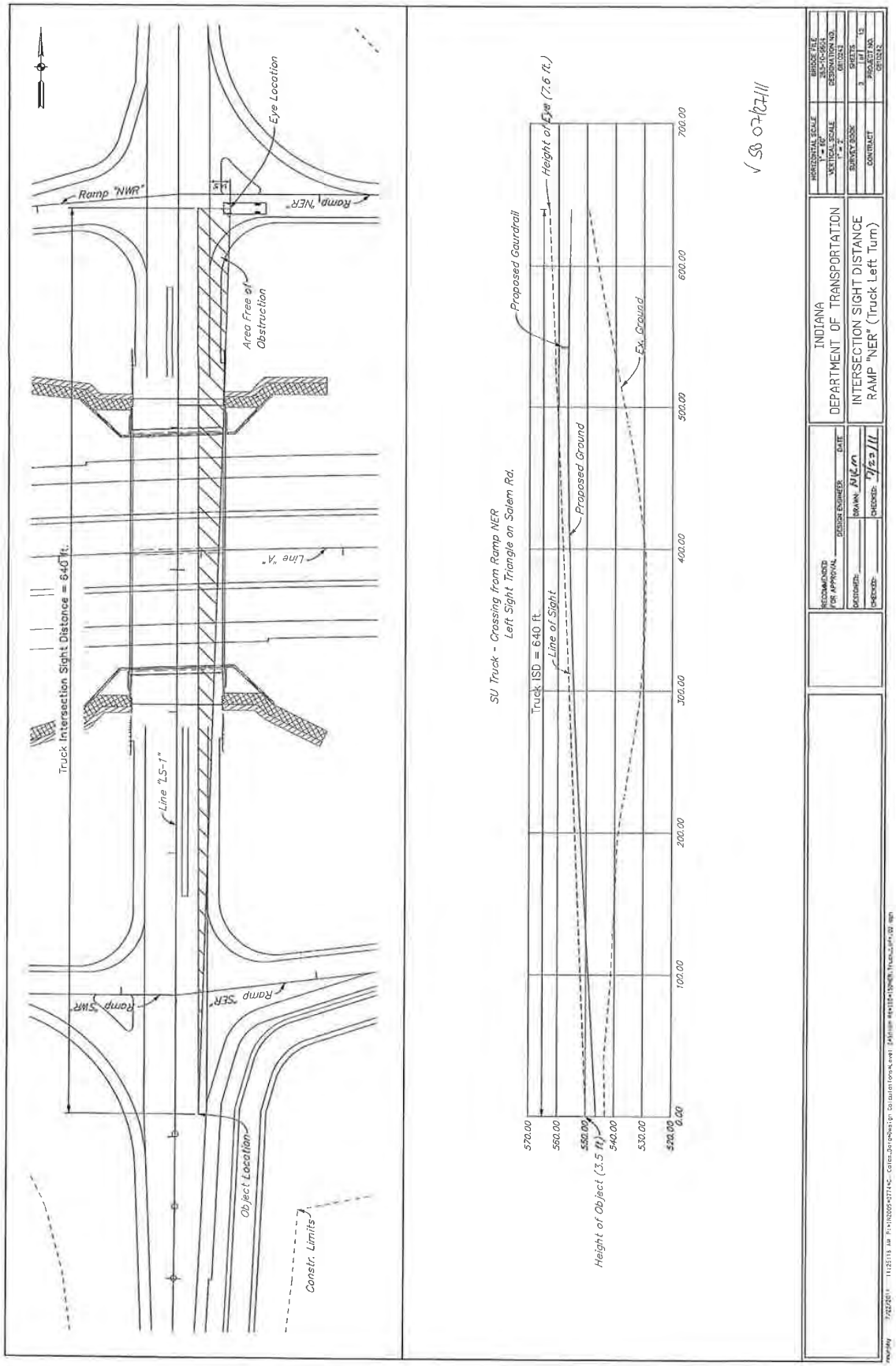
Truck Intersection Sight Distance = 640 ft.
Ramp "NWR"
Ramp "NER"
Eye Location
Area Free of Obstruction
Line "A"
Line "LS-1"
Ramp "SWR"
Ramp "SER"
Object Location
Constr. Limits
SU Truck - Crossing from Ramp NER
Left Sight Triangle on Salem Rd.
Truck ISD = 640 ft.
Line of Sight
Proposed Ground
Ex. Ground
Proposed Guardrail
Height of Eye (7.6 ft.)
Height of Object (3.5 ft.)
570.00
560.00
550.00
540.00
530.00
520.00
0.00
100.00
200.00
300.00
400.00
500.00
600.00
700.00
INDIANA
DEPARTMENT OF TRANSPORTATION
INTERSECTION SIGHT DISTANCE
RAMP "NER" (Truck Left Turn)

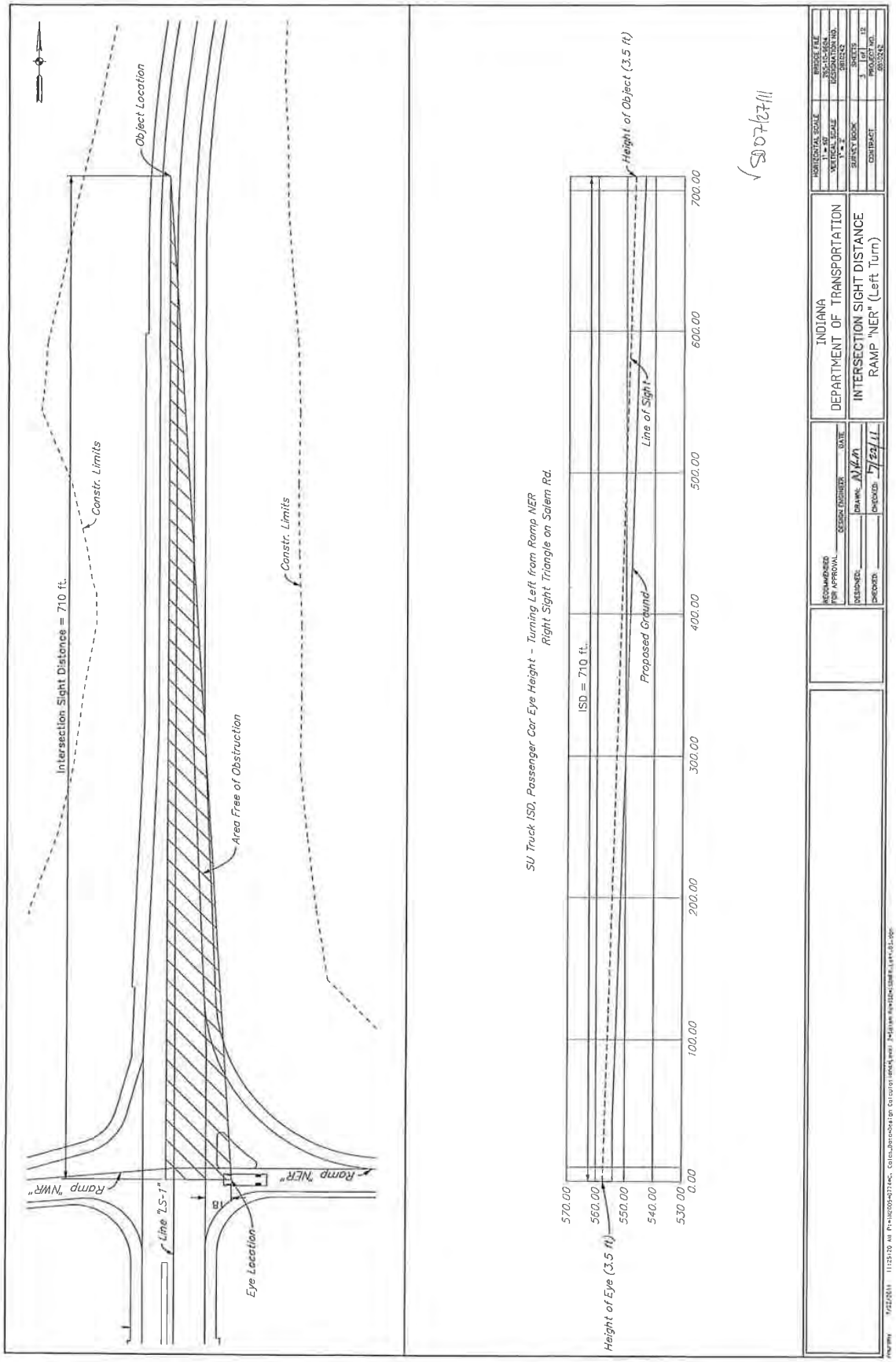
Intersection Sight Distance = 710 ft.
Object Location
Constr. Limits
Constr. Limits
Area Free of Obstruction
Ramp "NWR"
Ramp "NER"
Line "LS-1"
18
Eye Location
SU Truck ISD, Passenger Car Eye Height - Turning Left from Ramp NER
Right Sight Triangle on Salem Rd.
Height of Object (3.5 ft)
Line of Sight
Proposed Ground
ISD = 710 ft.
Height of Eye (3.5 ft)
570.00
560.00
550.00
540.00
530.00
0.00
100.00
200.00
300.00
400.00
500.00
600.00
700.00
INDIANA
DEPARTMENT OF TRANSPORTATION
INTERSECTION SIGHT DISTANCE
RAMP "NER" (Left Turn)
RECOMMENDED FOR APPROVAL
DESIGN ENGINEER
DATE
DESIGNED:
DRAWN:
CHECKED:
CHECKED:
HORIZONTAL SCALE
VERTICAL SCALE
SURVEY BOOK
CONTRACT
BRIDGE FILE
DESIGNATION NO.
SHEETS
PROJECT NO.
SCALE

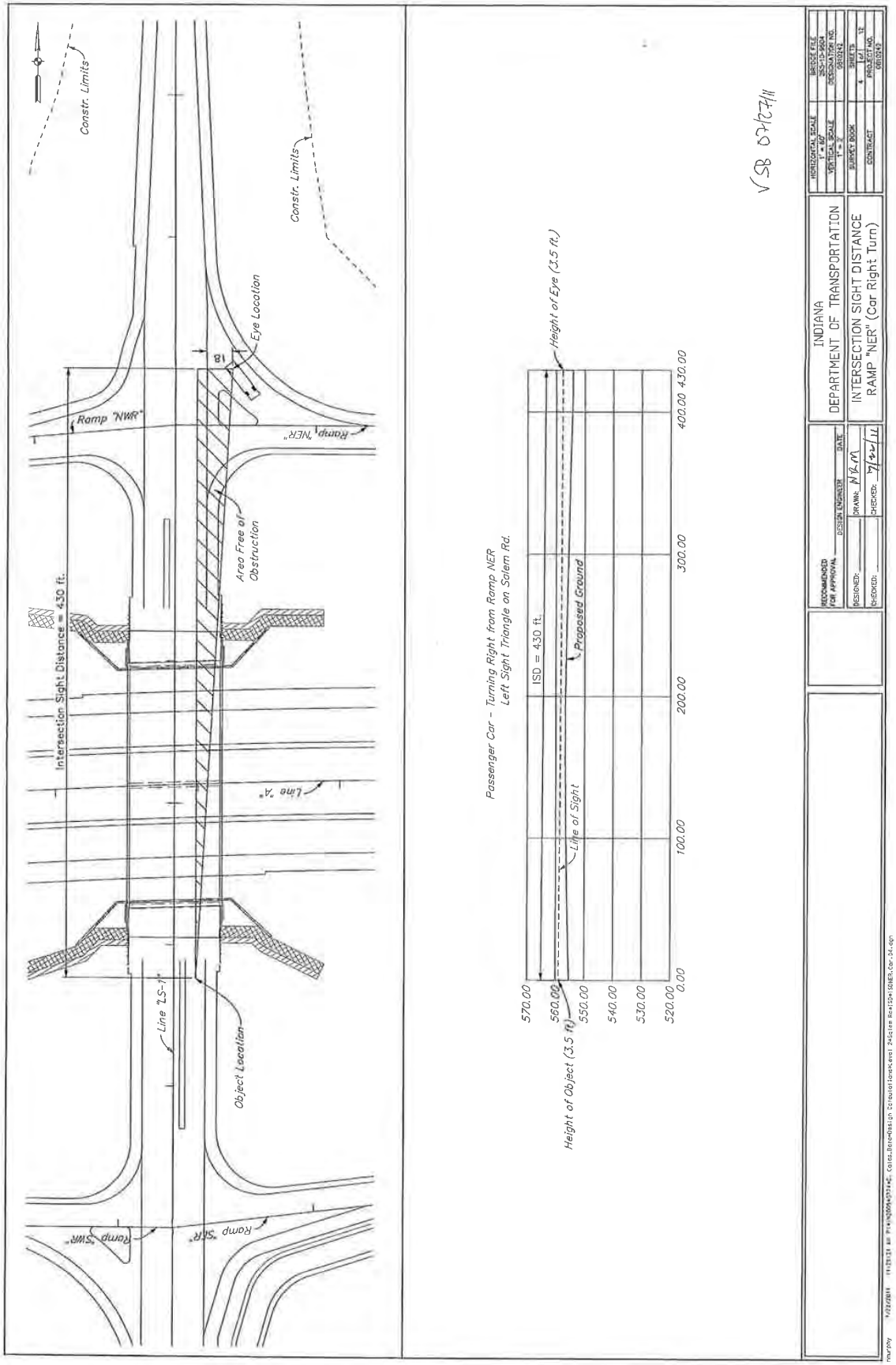
Constr. Limits
Constr. Limits
Eye Location
18
Ramp "NWR"
Ramp "NER"
Area Free of Obstruction
Intersection Sight Distance = 430 ft.
Line "A"
Line "LS-1"
Object Location
Ramp "SWR"
Ramp "SER"
Passenger Car - Turning Right from Ramp NER
Left Sight Triangle on Salem Rd.
Height of Eye (3.5 ft.)
ISD = 430 ft.
Proposed Ground
Line of Sight
Height of Object (3.5 ft.)
570.00
560.00
550.00
540.00
530.00
520.00
0.00
100.00
200.00
300.00
400.00 430.00
INDIANA
DEPARTMENT OF TRANSPORTATION
INTERSECTION SIGHT DISTANCE
RAMP "NER" (Car Right Turn)
RECOMMENDED FOR APPROVAL
DESIGN ENGINEER
DATE
DESIGNED:
DRAWN:
CHECKED:
CHECKED:
HORIZONTAL SCALE 1" = 40'
VERTICAL SCALE 1" = 5'
SURVEY BOOK
CONTRACT
BRIDGE FILE
DESIGNATION NO.
SHEETS
PROJECT NO.
VSB 07/27/11

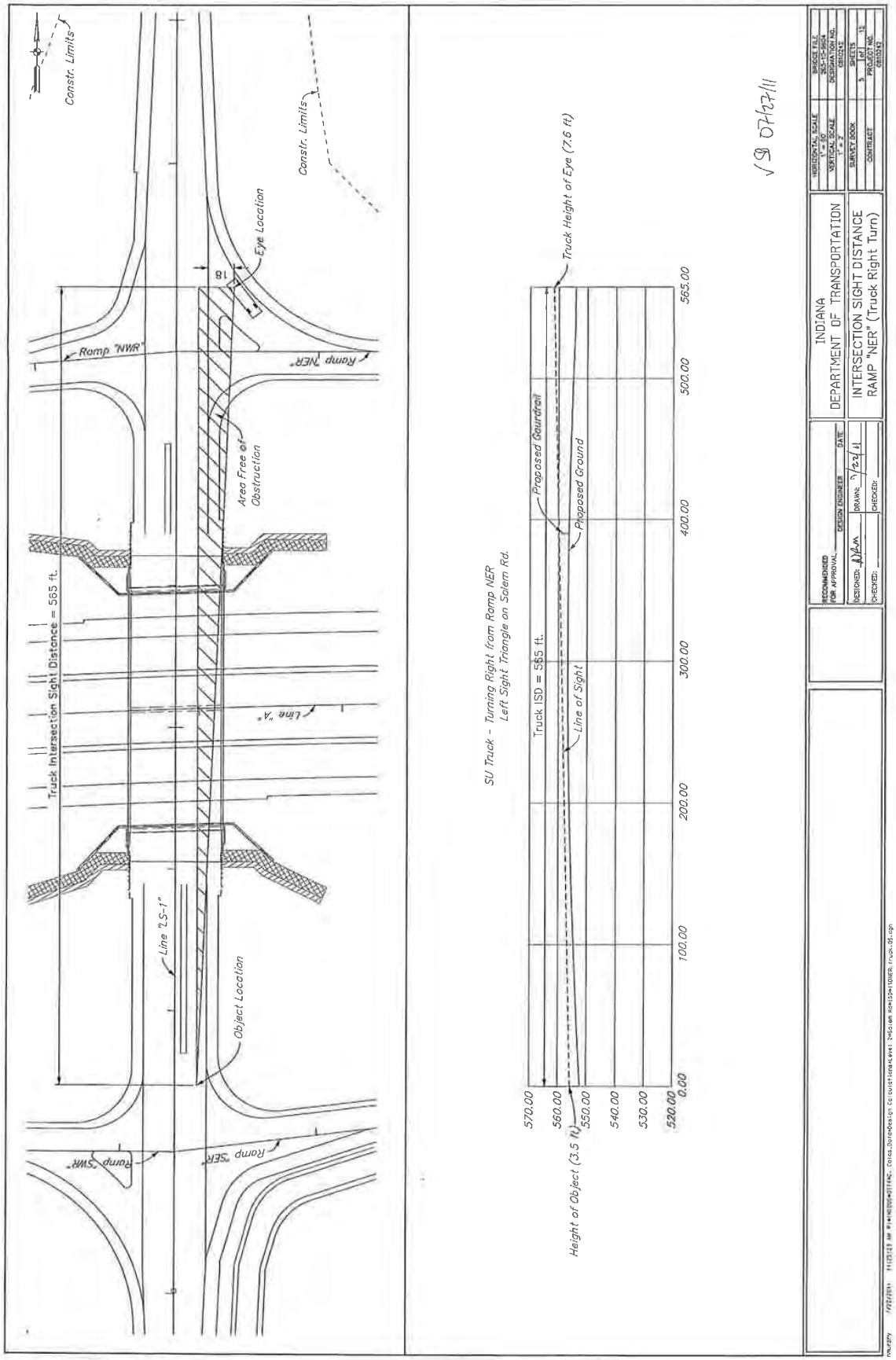
Constr. Limits
Constr. Limits
Eye Location
18
Ramp "NWR"
Ramp "NER"
Area Free of Obstruction
Truck Intersection Sight Distance = 565 ft.
Line "A"
Line "LS-1"
Object Location
Ramp "SWR"
Ramp "SER"
SU Truck - Turning Right from Ramp NER
Left Sight Triangle on Salem Rd.
Truck Height of Eye (7.6 ft)
Proposed Guardrail
Proposed Ground
Truck ISD = 565 ft.
Line of Sight
Height of Object (3.5 ft)
570.00
560.00
550.00
540.00
530.00
520.00
0.00
100.00
200.00
300.00
400.00
500.00
565.00
INDIANA
DEPARTMENT OF TRANSPORTATION
INTERSECTION SIGHT DISTANCE
RAMP "NER" (Truck Right Turn)
RECOMMENDED FOR APPROVAL:
DESIGN ENGINEER
DATE
DESIGNED:
DRAWN:
CHECKED:
CHECKED:
HORIZONTAL SCALE 1" = 10'
VERTICAL SCALE 1" = 2'
SURVEY BOOK
CONTRACT
BRIDGE FILE
DESIGNATION NO.
SHEETS
PROJECT NO.

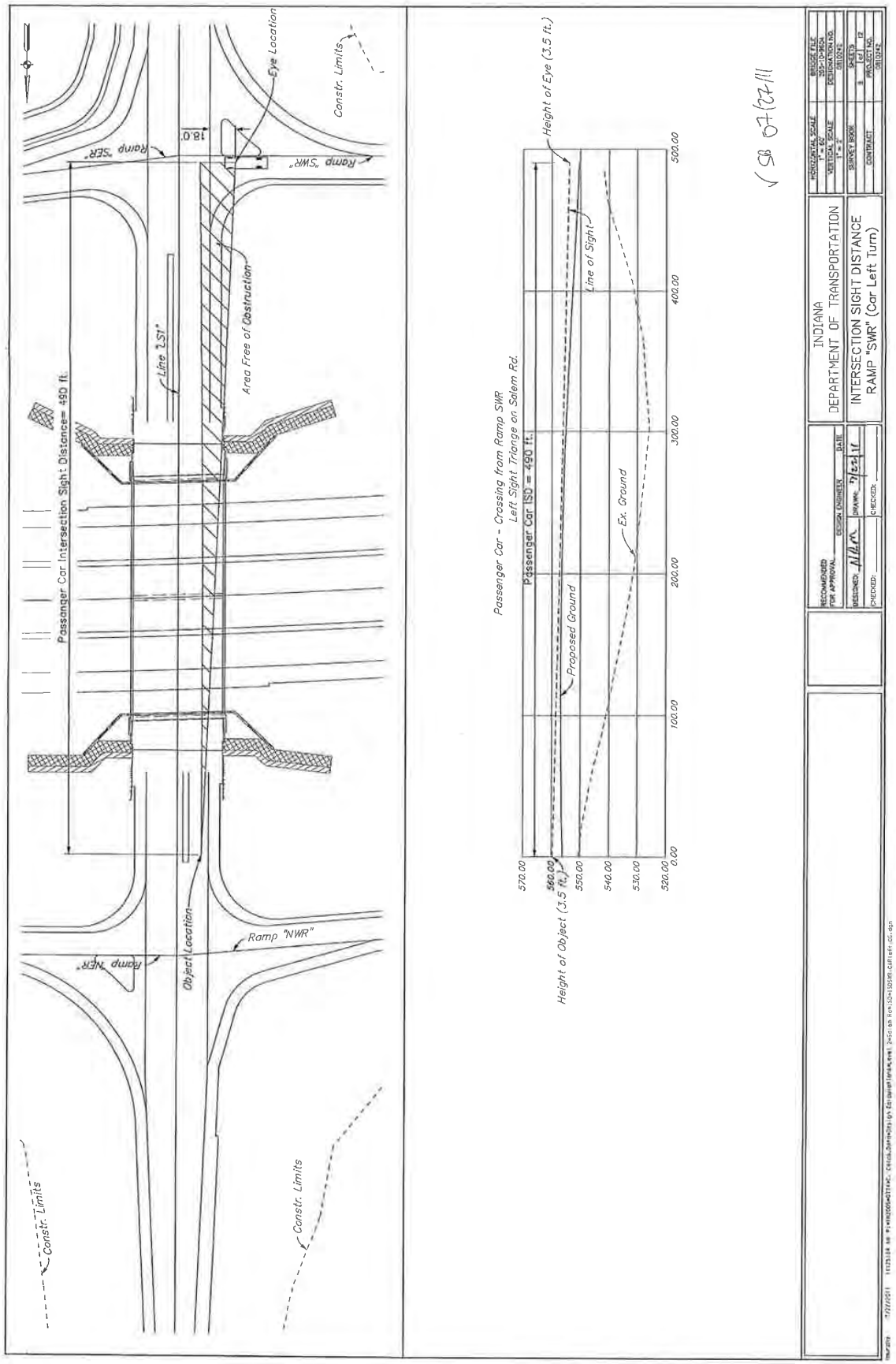
Passenger Car Intersection Sight Distance= 490 ft.
Line "LST"
Area Free of Obstruction
Eye Location
Constr. Limits
Ramp "SER"
Ramp "SWR"
18.0'
Ramp "NER"
Ramp "NWR"
Object Location
Constr. Limits
Constr. Limits
Passenger Car - Crossing from Ramp SWR
Left Sight Triange on Salem Rd.
Passenger Car ISD = 490 ft.
Height of Eye (3.5 ft.)
Line of Sight
Ex. Ground
Proposed Ground
Height of Object (3.5 ft.)
570.00
560.00
550.00
540.00
530.00
520.00
0.00
100.00
200.00
300.00
400.00
500.00
INDIANA
DEPARTMENT OF TRANSPORTATION
INTERSECTION SIGHT DISTANCE
RAMP "SWR" (Car Left Turn)
RECOMMENDED FOR APPROVAL
DESIGN ENGINEER
DATE
DESIGNED
DRAWN
CHECKED
CHECKED
HORIZONTAL SCALE
VERTICAL SCALE
SURVEY BOOK
CONTRACT
BRIDGE FILE
DESIGNATION NO.
SHEETS
PROJECT NO.

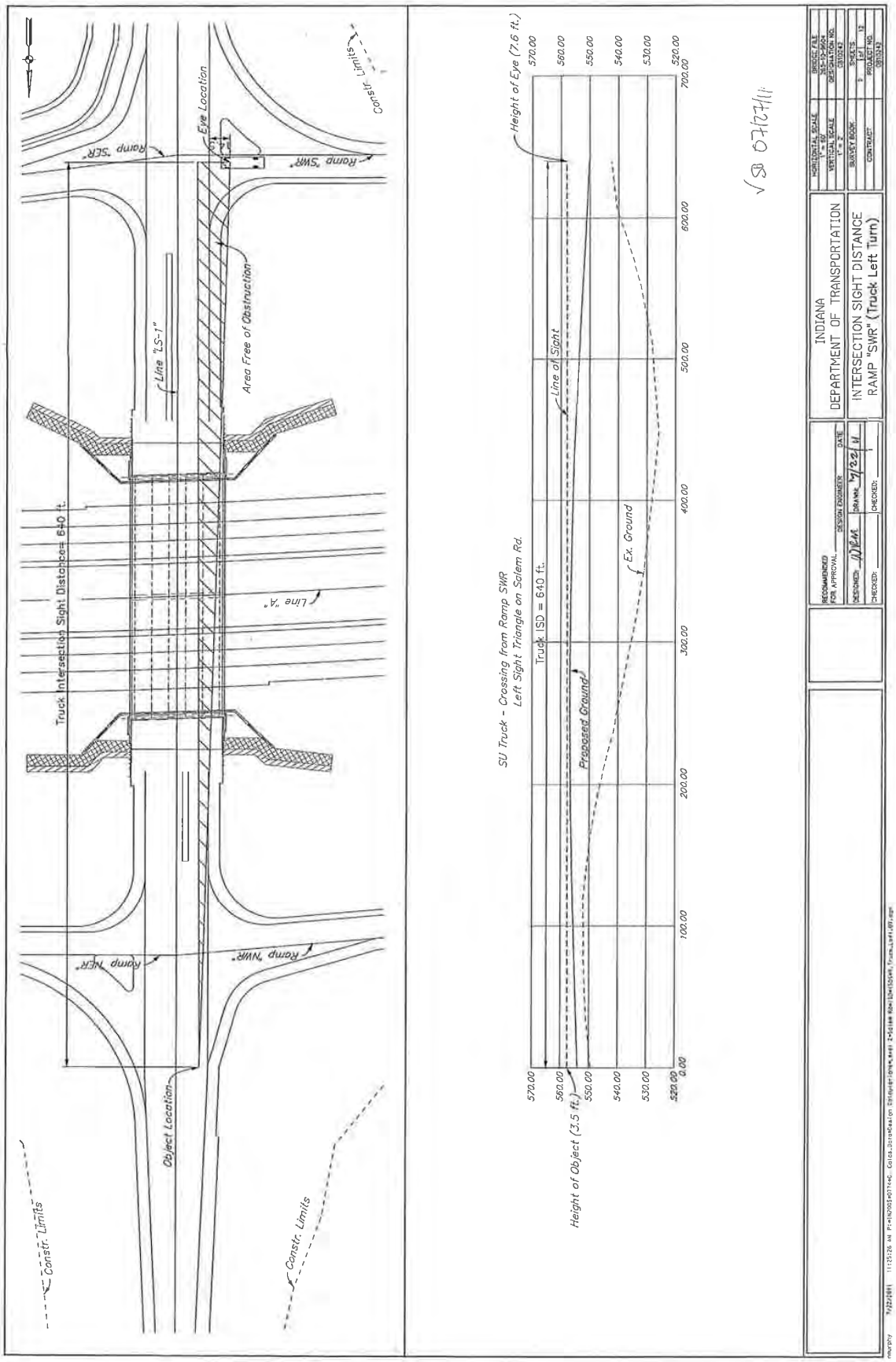
Ramp "SER"
Eye Location
Ramp "SWR"
Constr. Limits
Line "LS-1"
Area Free of Obstruction
Truck Intersection Sight Distance= 640 ft.
Line "A"
Ramp "NER"
Ramp "NWR"
Object Location
Constr. Limits
Constr. Limits
SU Truck - Crossing from Ramp SWR
Left Sight Triangle on Salem Rd.
Height of Eye (7.6 ft.)
Truck ISD = 640 ft.
Line of Sight
Ex. Ground
Proposed Ground
Height of Object (3.5 ft.)
570.00
560.00
550.00
540.00
530.00
520.00
0.00
100.00
200.00
300.00
400.00
500.00
600.00
700.00
INDIANA
DEPARTMENT OF TRANSPORTATION
INTERSECTION SIGHT DISTANCE
RAMP "SWR" (Truck Left Turn)
RECOMMENDED FOR APPROVAL
DESIGN ENGINEER
DATE
DESIGNED
DRAWN
CHECKED
HORIZONTAL SCALE 1" = 50'
VERTICAL SCALE 1" = 2'
SURVEY BOOK
CONTRACT
BRIDGE FILE
SHEETS
PROJECT NO.

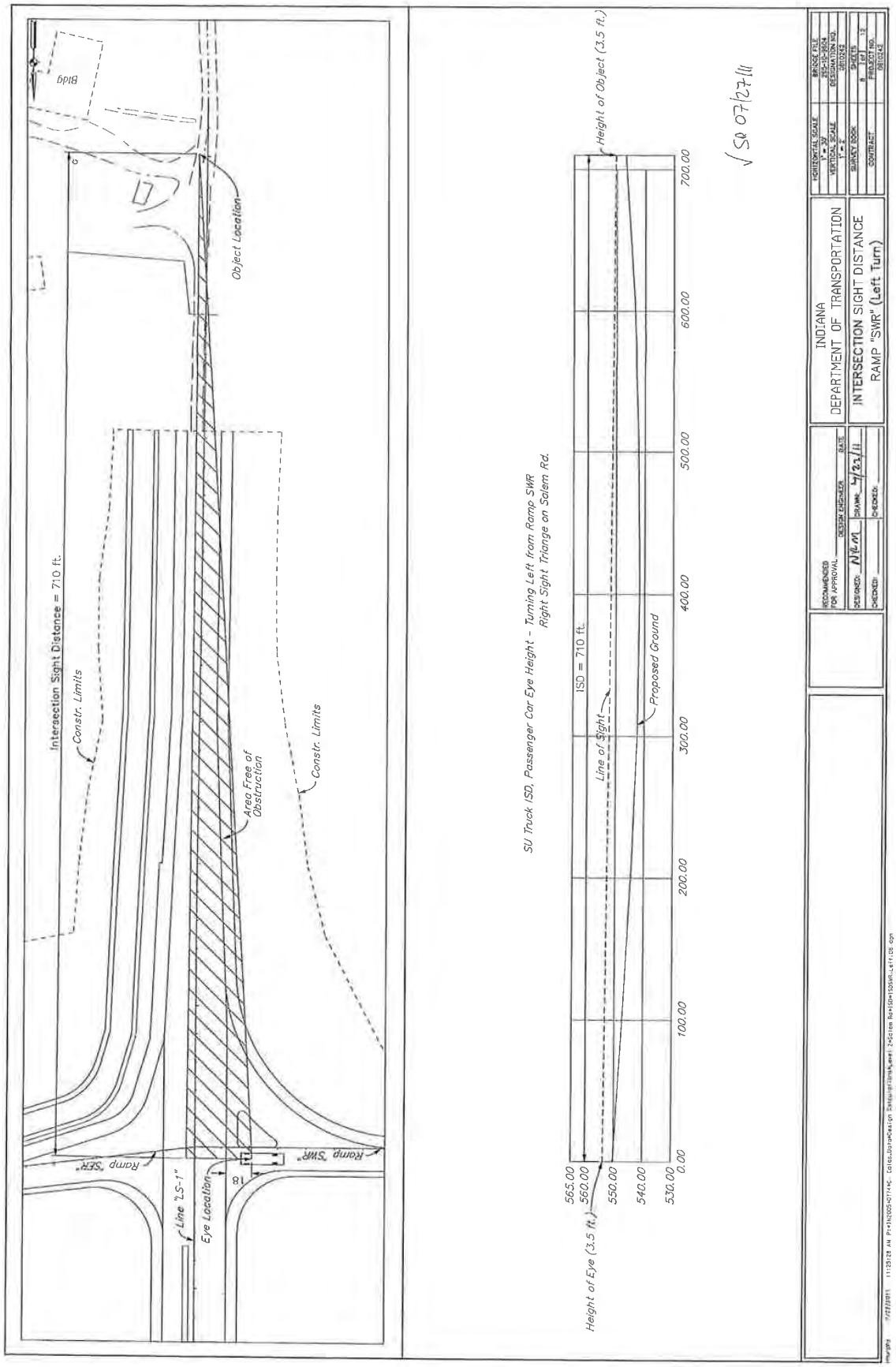
Bldg
Object Location
Interaction Sight Distance = 710 ft.
Constr. Limits
Area Free of Obstruction
Constr. Limits
Ramp "SER"
Ramp "SWR"
Line "LS-1"
Eye Location
SU Truck ISD, Passenger Car Eye Height - Turning Left from Ramp SWR
Right Sight Triange on Salem Rd.
Height of Object (3.5 ft.)
ISD = 710 ft.
Line of Sight
Proposed Ground
Height of Eye (3.5 ft.)
565.00
560.00
550.00
540.00
530.00
0.00
100.00
200.00
300.00
400.00
500.00
600.00
700.00
INDIANA
DEPARTMENT OF TRANSPORTATION
INTERSECTION SIGHT DISTANCE
RAMP "SWR" (Left Turn)

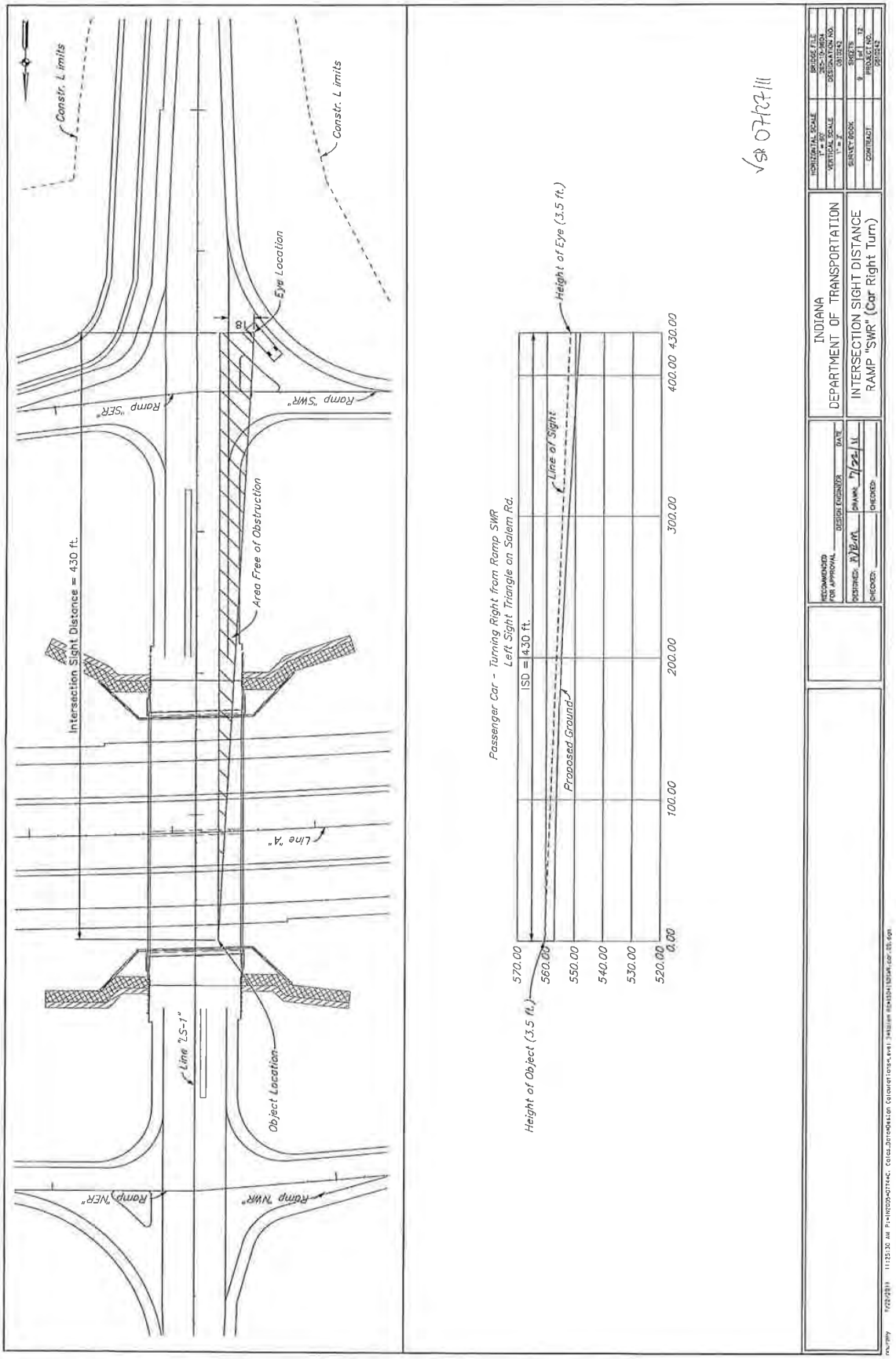
Constr. Limits
Constr. Limits
Eye Location
18
Ramp "SER"
Ramp "SWR"
Intersection Sight Distance = 430 ft.
Area Free of Obstruction
Line "A"
Line "S-1"
Object Location
Ramp "NER"
Ramp "NWR"
Passenger Car - Turning Right from Ramp SWR
Left Sight Triangle on Salem Rd.
ISD = 430 ft.
Height of Eye (3.5 ft.)
Line of Sight
Proposed Ground
Height of Object (3.5 ft.)
570.00
560.00
550.00
540.00
530.00
520.00
0.00
100.00
200.00
300.00
400.00
430.00
INDIANA
DEPARTMENT OF TRANSPORTATION
INTERSECTION SIGHT DISTANCE
RAMP "SWR" (Car Right Turn)
RECOMMENDED FOR APPROVAL
DESIGN ENGINEER
DATE
DESIGNED:
DRAWN:
CHECKED:
HORIZONTAL SCALE 1" = 60'
VERTICAL SCALE 1" = 2'
SURVEY BOOK
CONTRACT
BRIDGE FILE
DESIGNATION NO.
SHEETS
PROJECT NO.

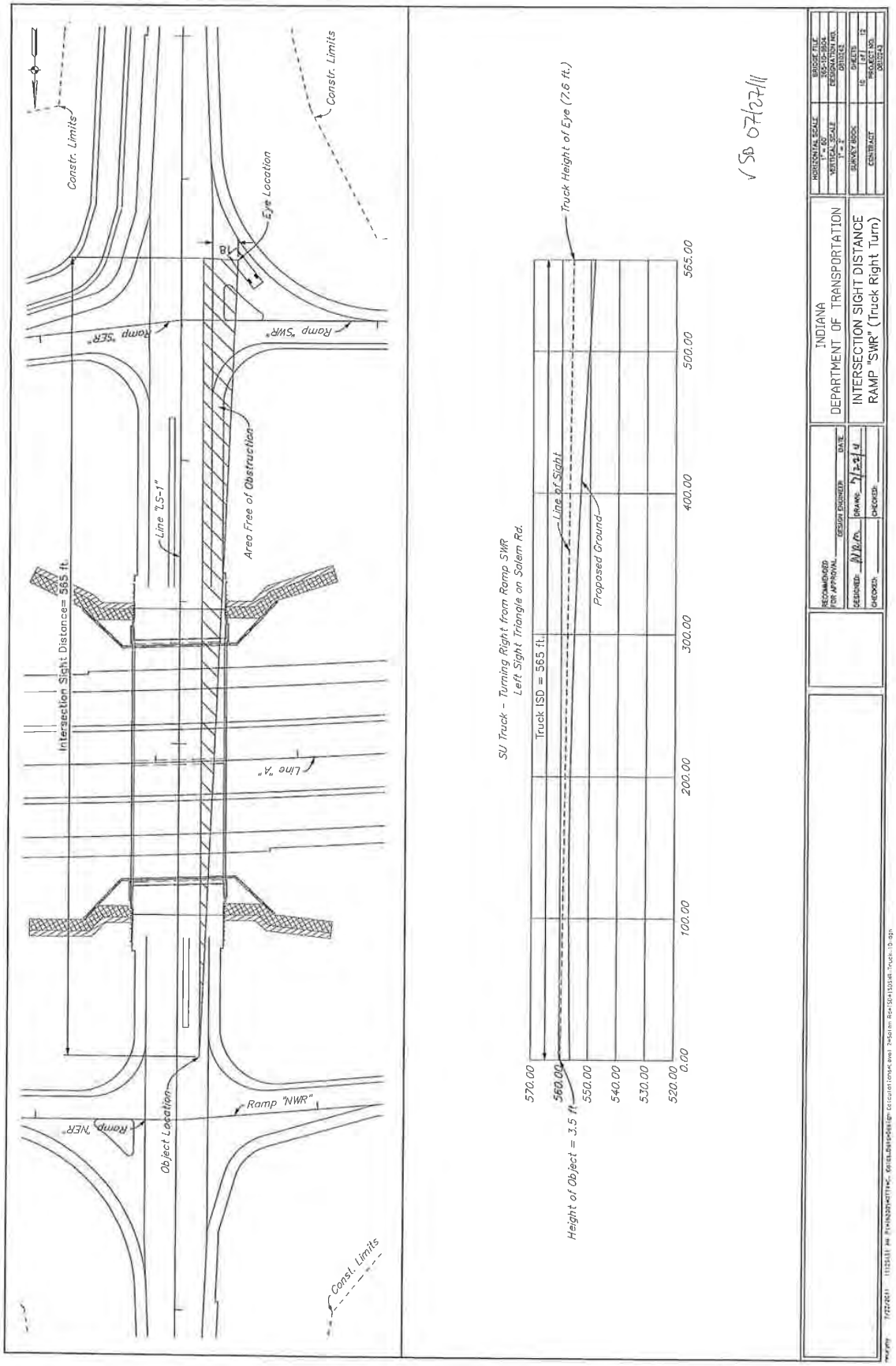
Constr. Limits
Constr. Limits
Eye Location
18
Ramp "SER"
Ramp "SWR"
Area Free of Obstruction
Line "LS-1"
Intersection Sight Distance= 565 ft.
Line "A"
Object Location
Ramp "NER"
Ramp "NWR"
Const. Limits
SU Truck - Turning Right from Ramp SWR
Left Sight Triangle on Salem Rd.
Truck Height of Eye (7.6 ft.)
Truck ISD = 565 ft.
Line of Sight
Proposed Ground
Height of Object = 3.5 ft
570.00
560.00
550.00
540.00
530.00
520.00
0.00
100.00
200.00
300.00
400.00
500.00
565.00
INDIANA
DEPARTMENT OF TRANSPORTATION
INTERSECTION SIGHT DISTANCE
RAMP "SWR" (Truck Right Turn)
RECOMMENDED FOR APPROVAL
DESIGN ENGINEER
DATE
DESIGNED:
DRAWN:
CHECKED:
HORIZONTAL SCALE
VERTICAL SCALE
SURVEY BOOK
CONTRACT
BRIDGE FILE
ROUTE-SECT.
DESIGNATION NO.
SHEETS
12 of 12
PROJECT NO.
DESIGN
7/27/2011

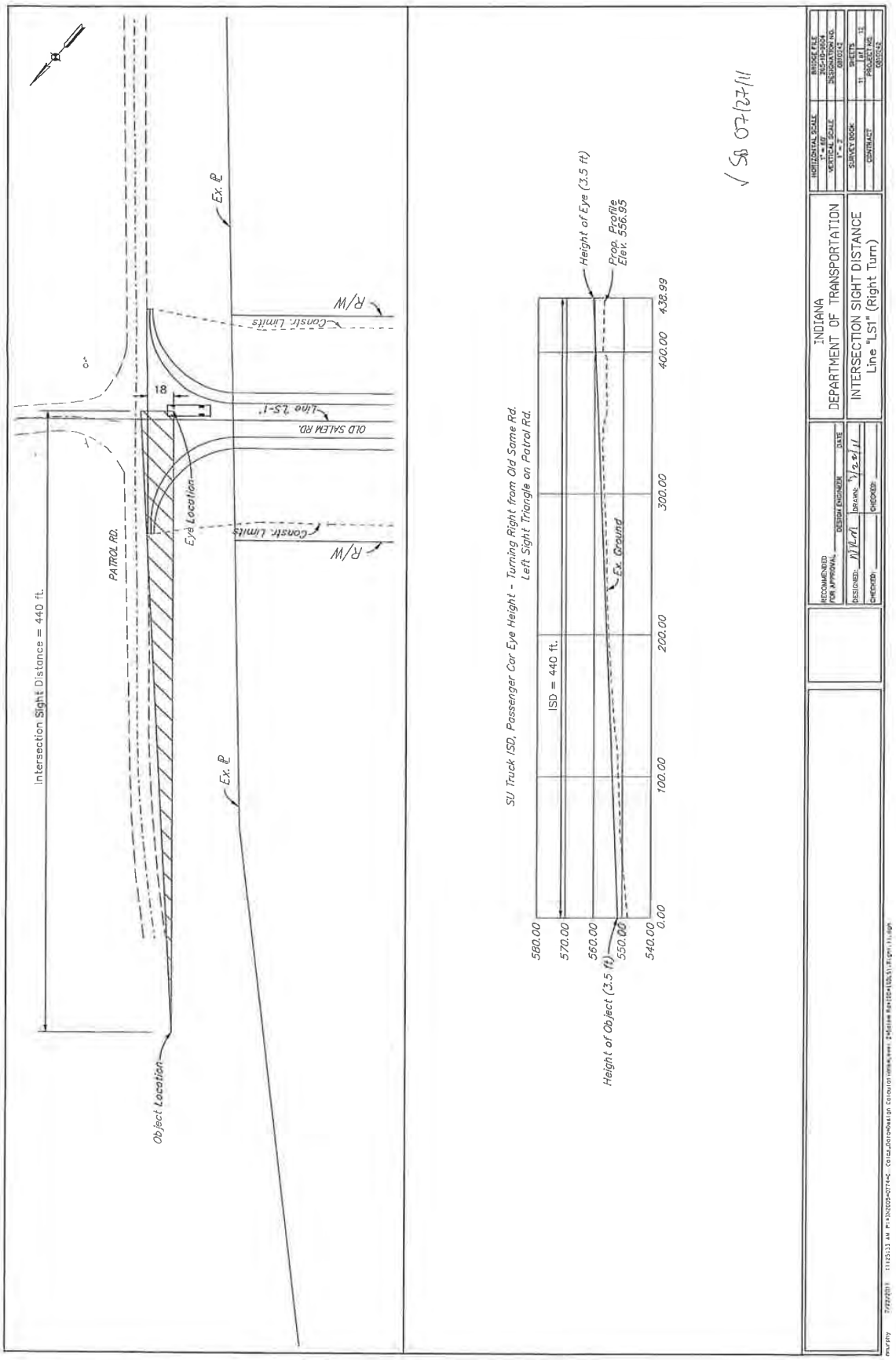
Intersection Sight Distance = 440 ft.
PATROL RD.
Object Location
Eye Location
18
OLD SALEM RD.
Line "LS-1"
Const. Limits
R/W
Ex. ℄
SU Truck ISD, Passenger Car Eye Height - Turning Right from Old Same Rd.
Left Sight Triangle on Patrol Rd.
ISD = 440 ft.
Height of Eye (3.5 ft)
Prop. Profile
Elev. 556.95
Ex. Ground
Height of Object (3.5 ft)
580.00
570.00
560.00
550.00
540.00
0.00
100.00
200.00
300.00
400.00
438.99
INDIANA
DEPARTMENT OF TRANSPORTATION
INTERSECTION SIGHT DISTANCE
Line "LS1" (Right Turn)
RECOMMENDED FOR APPROVAL
DESIGN ENGINEER
DATE
DESIGNED
DRAWN
CHECKED
HORIZONTAL SCALE
VERTICAL SCALE
SURVEY BOOK
CONTRACT
BRIDGE FILE
DESIGNATION NO.
SHEETS

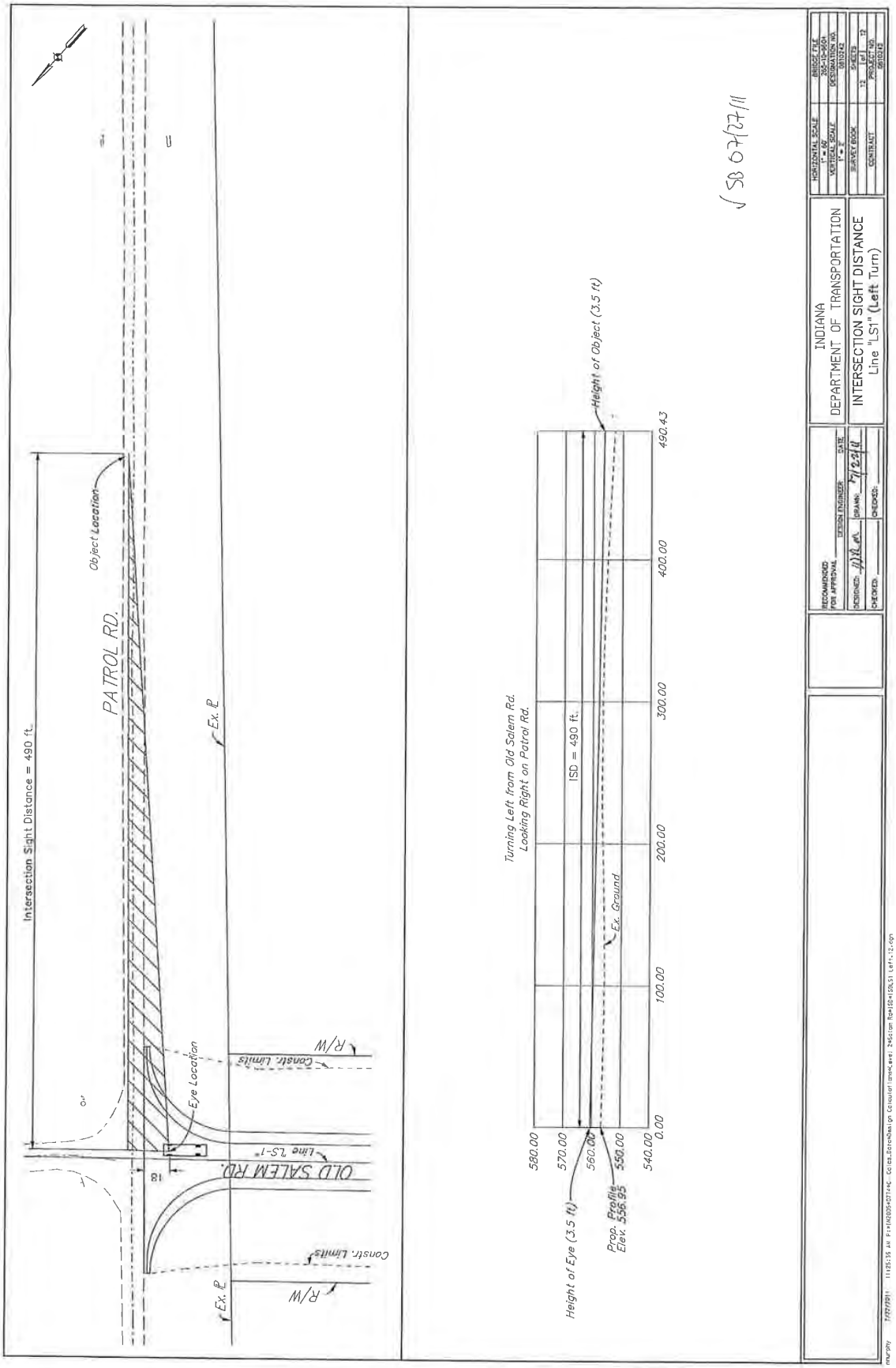
Intersection Sight Distance = 490 ft.
Object Location
PATROL RD.
Ex. ℄
Eye Location
Const. Limits
R/W
Line "LS-1"
OLD SALEM RD.
18
Const. Limits
R/W
Ex. ℄
Turning Left from Old Salem Rd.
Looking Right on Patrol Rd.
ISD = 490 ft.
Height of Object (3.5 ft)
Ex. Ground
Height of Eye (3.5 ft)
Prop. Profile
Elev. 556.95
580.00
570.00
560.00
550.00
540.00
0.00
100.00
200.00
300.00
400.00
490.43
INDIANA
DEPARTMENT OF TRANSPORTATION
INTERSECTION SIGHT DISTANCE
Line "LS1" (Left Turn)
RECOMMENDED FOR APPROVAL
DESIGN ENGINEER
DATE
DESIGNED
DRAWN
CHECKED
CHECKED
HORIZONTAL SCALE
1" = 40'
VERTICAL SCALE
1" = 2'
SURVEY BOOK
CONTRACT
BRIDGE FILE
DESIGNATION NO.
SHEETS
12
of
12
PROJECT NO.
BRIDGE

THE EAST END CROSSING

(LOUISVILLE-SOUTHERN INDIANA
OHIO RIVER BRIDGES PROJECT)

PUBLIC-PRIVATE AGREEMENT

BOOK 2
TECHNICAL PROVISIONS

ATTACHMENT 14-1
OVERHEAD SIGN STRUCTURES STANDARD DRAWINGS

(This page intentionally blank.)

INDIANA DEPARTMENT OF TRANSPORTATION

SIGN BOX TRUSS & CANTILEVER STRUCTURE DETAIL DRAWINGS

INDEX

SHEET NO.	SUBJECT
	BOX TRUSS STRUCTURE DETAIL DRAWINGS
1	PLAN AND ELEVATION
2	TABLE OF DIMENSIONS - SPANS 34' THRU 85'
3	TABLE OF DIMENSIONS - SPANS 86' THRU 130'
4	TRUSS SCHEDULE
5	ISOMETRIC VIEWS
6	CONNECTIONS AND WELD DETAILS
7	ALUMINUM CHORD DETAILS
8	END SUPPORT DETAILS
9-10	TRUSS CONNECTION DETAILS
11	STEEL END SUPPORT HANDHOLE DETAILS
12-13	STEEL END SUPPORT BASE DETAILS
14-15	INTERIOR WALKWAY GRATING PLAN & DETAILS
16	FOUNDATION AT 33" CONCRETE BARRIER WALL
17	FOUNDATION AT 45" CONCRETE BARRIER WALL
18	FOUNDATION AT 36" MEDIAN OR SHOULDER
19	SPREAD FOOTING QUANTITIES
	CANTILEVER STRUCTURE DETAIL DRAWINGS
1	QUADRI-CHORD ARM - PLAN AND ELEVATION
2	DOUBLE MAST ARM - PLAN AND ELEVATION
3	TABLE OF DIMENSIONS
4	ARM DETAILS
5-6	QUADRI-CHORD DETAILS
7	MAST ARM DETAILS
8	BASE PLATE AND ANCHOR BOLT DETAILS
9	HANDHOLE DETAILS
10	COLUMN DETAILS
11-13	FOUNDATION AT 33" CONCRETE BARRIER WALL
14-16	FOUNDATION AT 45" CONCRETE BARRIER WALL
17-19	DRILLED SHAFT FOUNDATION

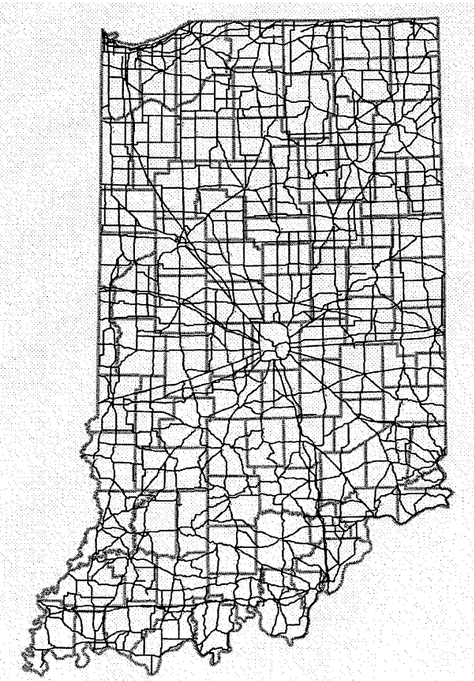

PLANS APPROVED BY:_____

INDIANA DEPARTMENT OF TRANSPORTATION

INDIANA DEPARTMENT OF TRANSPORTATION
STANDARD SPECIFICATIONS DATED 2010
TO BE USED WITH THESE PLANS

ALFREDO B. HAMZA REGISTERED No. 6002065 STATE OF INDIANA PROFESSIONAL ENGINEER

RECOMMENDED FOR APPROVAL _____ DESIGN ENGINEER DATE

DESIGNED: _____ DRAWN: _____

CHECKED: _____ CHECKED: _____

INDIANA
DEPARTMENT OF TRANSPORTATION

SHEETS __ of __

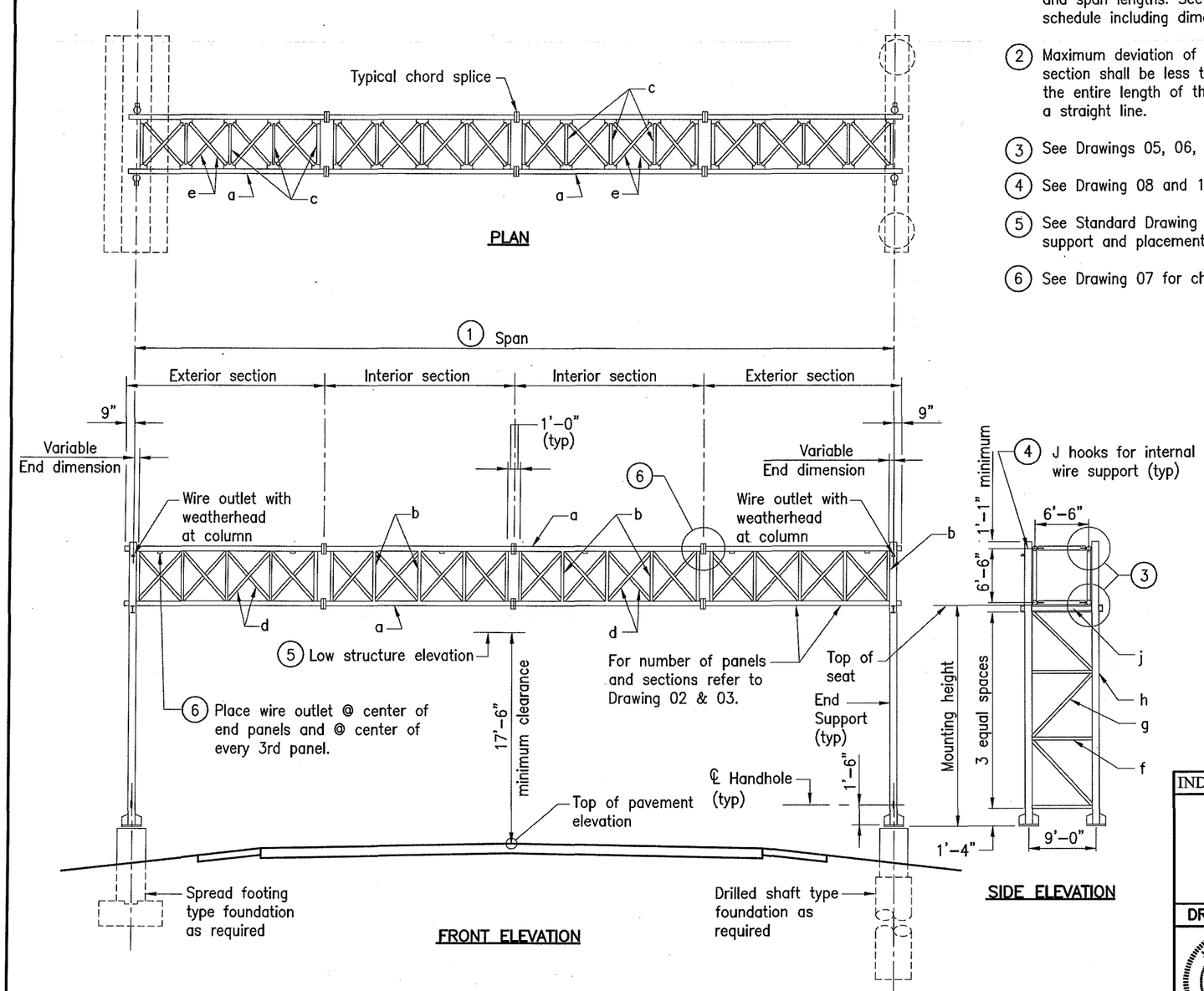

NOTES:

1. Sign box truss structures are for various maximum sign areas and span lengths. See Drawings 02 thru 04 for structure schedule including dimensions and member sizes.
2. Maximum deviation of any chord from a straight line in any section shall be less than 1/8". Max. horizontal deviation over the entire length of the box truss shall be less than 3/8" from a straight line.
3. See Drawings 05, 06, 09 and 10 for truss connection details.
4. See Drawing 08 and 12 for end support details.
5. See Standard Drawing E 802-SNWW-01 through 03 for sign support and placement details.
6. See Drawing 07 for chord flange and wire outlet details.

LEGEND:

- a – Chord
- b – Verticals in front and back faces of box truss
- c – Horizontals in top and bottom faces of box truss
- d – Diagonals in front and back faces of box truss
- e – Diagonals in top and bottom faces of box truss
- f – Horizontals in End Supports
- g – Diagonals in End Supports
- h – End Support columns
- j – Horizontal W-beam in End Support

INDIANA DEPARTMENT OF TRANSPORTATION

SIGN BOX TRUSS STRUCTURE PLAN AND ELEVATION

DECEMBER 2008 (Revised 11/2/09)

DRAWING NO. 01

JOHN C. MAUSER REGISTERED No. 17361 STATE OF INDIANA PROFESSIONAL ENGINEER

John C. Mauser 07/18/08
DESIGN ENGINEER DATE

DESIGNED: VDB DRAWN: REM

DIMENSIONS FOR SIGN BOX TRUSSES (34' thru 85')

SPAN	EXTERIOR SECTIONS					INTERIOR SECTIONS			
SPAN-TRUSS LENGTH, (FT)	NO. OF SECTIONS	NO. OF PANELS PER SECTION	VARIABLE END DIMEN.	PANEL LENGTH	SECTION LENGTH	NO. OF SECTIONS	NO. OF PANELS PER SECTION	PANEL LENGTH	SECTION LENGTH
34	1	6	6"	5'-6"	35'-6"	0			
35	1	6	6"	5'-8"	36'-6"	0			
36	2	3	6"	5'-6"	18'-9"	0			
37	2	3	6"	5'-8"	19'-3"	0			
38	2	3	6"	5'-10"	19'-9"	0			
39	2	3	6"	6'	20'-3"	0			
40	2	3	6"	6'-2"	20'-9"	0			
41	2	3	6"	6'-4"	21'-3"	0			
42	2	3	6"	6'-6"	21'-9"	0			
43	2	4	6"	5'	22'-3"	0			
44	2	4	6"	5'-1 1/2"	22'-9"	0			
45	2	4	6"	5'-3"	23'-3"	0			
46	2	4	6"	5'-4 1/2"	23'-9"	0			
47	2	4	6"	5'-6"	24'-3"	0			
48	2	4	6"	5'-7 1/2"	24'-9"	0			
49	2	4	6"	5'-9"	25'-3"	0			
50	2	4	6"	5'-10 1/2"	25'-9"	0			
51	2	4	6"	6'	26'-3"	0			
52	2	4	6"	6'-1 1/2"	26'-9"	0			
53	2	4	6"	6'-3"	27'-3"	0			
54	2	4	6"	6'-4 1/2"	27'-9"	0			
55	2	4	6"	6'-6"	28'-3"	0			
56	2	5	5 1/4"	5'-3 3/4"	28'-9"	0			
57	2	5	6 1/4"	5'-4 3/4"	29'-3"	0			
58	2	5	6"	5'-6"	29'-9"	0			
59	2	5	5 3/4"	5'-7 1/4"	30'-3"	0			
60	2	5	5 1/2"	5'- 8 1/2"	30'-9"	0			
61	2	5	6 1/2"	5'-9 1/2"	31'-3"	0			
62	2	5	6 1/4"	5'-10 3/4"	31'-9"	0			
63	2	5	6"	6'	32'-3"	0			
64	2	5	5 3/4"	6'-1 1/4"	32'-9"	0			
65	2	5	5 1/2"	6'-2 1/2"	33'-3"	0			
66	2	5	5 1/4"	6'-3 3/4"	33'-9"	0			
67	2	5	5"	6'-5"	34'-3"	0			
68	2	5	6"	6'-6"	34'-9"	0			
69	2	4	6"	5'-4"	23'-7"	1	4	5'-4"	23'-4"
70	2	4	6"	5'-5"	23'-11"	1	4	5'-5"	23'-8"
71	2	4	6"	5'-6"	24'-3"	1	4	5'-6"	24'
72	2	4	6"	5'-7"	24'-7"	1	4	5'-7"	24'-4"
73	2	4	6"	5'-8"	24'-11"	1	4	5'-8"	24'-8"
74	2	4	6"	5"-9"	25'-3"	1	4	5"-9"	25'
75	2	4	6"	5'-10"	25'-7"	1	4	5'-10"	25'-4"
76	2	4	6"	5'-11"	25'-11"	1	4	5'-11"	25'-8"
77	2	4	6"	6'	26'-3"	1	4	6'	26'
78	2	4	6"	6'-1 "	26'-7"	1	4	6'-1 "	26'-4"
79	2	4	6"	6'-2"	26'-11"	1	4	6'-2"	26'-8"
80	2	4	6"	6'-3"	27'-3"	1	4	6'-3"	27'
81	2	4	6"	6'-4"	27'-7"	1	4	6'-4"	27'-4"
82	2	4	6"	6'-5"	27'-11"	1	4	6'-5"	27'-8"
83	2	4	6"	6'-6"	28'-3"	1	4	6'-6"	28'
84	2	5	5 3/4"	5'-7 3/4"	30'-5 1/2"	1	4	5'-7 3/4"	24'-7"
85	2	5	6 1/2"	5'-8 1/2"	30'-10"	1	4	5'-8 1/2"	24'-10"

NOTES:

1. All panels on a truss shall be the same length. The minimum panel length is 5'-0" and the maximum is 6'-6".
2. A single interior unit shall have an even number of panels to maintain the pattern of the vertical diagonals.
3. Use minimum number of sections for each truss. Keep the maximum section length at 35'-6".
4. See Drawing 03 for required camber.

INDIANA DEPARTMENT OF TRANSPORTATION

SIGN BOX TRUSS STRUCTURE
TABLE OF DIMENSIONS
SPANS 34' thru 85'

DECEMBER 2008 (Revised 11/2/09)

DRAWING NO. 02

JOHN C. MAUSER REGISTERED No. 17361 STATE OF INDIANA PROFESSIONAL ENGINEER

John C. Mauser 07/18/08
DESIGN ENGINEER DATE

DESIGNED: VDB DRAWN: REM

DIMENSIONS FOR SIGN BOX TRUSSES (86' thru 130')

SPAN	EXTERIOR SECTIONS					INTERIOR SECTIONS			
SPAN-TRUSS LENGTH, (FT)	NO. OF SECTIONS	NO. OF PANELS PER SECTION	VARIABLE END DIMEN.	PANEL LENGTH	SECTION LENGTH	NO. OF SECTIONS	NO. OF PANELS PER SECTION	PANEL LENGTH	SECTION LENGTH
86	2	5	5 1/2"	5'-9 1/2"	31'-2"	1	4	5'-9 1/2"	25'-2"
87	2	5	6 1/4"	5'-10 1/4"	31'-6 1/2"	1	4	5'-10 1/4"	25'-5"
88	2	5	7"	5'-11"	31'-11"	1	4	5'-11"	25'-8"
89	2	5	6"	6'	32'-3"	1	4	6'	26'
90	2	5	5"	6'-1"	32'-7"	1	4	6'-1"	26'-4"
91	2	5	5 3/4"	6'-1 3/4"	32'-11 1/2"	1	4	6'-1 3/4"	26'-7"
92	2	5	6 1/2"	6'-2 1/2"	33'-4"	1	4	6'-2 1/2"	26'-10"
93	2	5	5 1/2"	6'-3 1/2"	33'-8"	1	4	6'-3 1/2"	27'-2"
94	2	5	6 1/4"	6'-4 1/4"	34'-1/2"	1	4	6'-4 1/4"	27'-5"
95	2	5	5 1/4"	6'-5 1/4"	34'-4 1/2"	1	4	6'-5 1/4"	27'-9"
96	2	5	6"	6'-6"	34'-9"	1	4	6'-6"	28'
97	2	4	6"	5'-7 1/2"	24'-9"	2	4	5'-7 1/2"	24'-6"
98	2	4	6"	5'-8 1/4"	25'	2	4	5'-8 1/4"	24'-9"
99	2	4	6"	5'-9"	25'-3"	2	4	5'-9"	25'
100	2	4	6"	5'-9 3/4"	25'-6"	2	4	5'-9 3/4"	25'-3"
101	2	4	6"	5'-10 1/2"	25'-9"	2	4	5'-10 1/2"	25'-6"
102	2	4	6"	5'-11 1/4"	26'	2	4	5'-11 1/4"	25'-9"
103	2	4	6"	6'	26'-3"	2	4	6'	26'
104	2	4	6"	6'-3/4"	26'-6"	2	4	6'-3/4"	26'-3"
105	2	4	6"	6'-1 1/2"	26'-9"	2	4	6'-1 1/2"	26'-6"
106	2	4	6"	6'-2 1/4"	27'	2	4	6'-2 1/4"	26'-9"
107	2	4	6"	6'-3"	27'-3"	2	4	6'-3"	27'
108	2	4	6"	6'-3 3/4"	27'-6"	2	4	6'-3 3/4"	27'-3"
109	2	4	6"	6'-4 1/2"	27'-9"	2	4	6'-4 1/2"	27'-6"
110	2	4	6"	6'-5 1/4"	28'	2	4	6'-5 1/4"	27'-9"
111	2	4	6"	6'-6"	28'-3"	2	4	6'-6"	28'
112	2	5	6"	5'-3"	28'-6"	2	5	5'-3"	28'-3"
113	2	5	7"	5'-3 1/2"	28'-9 1/2"	2	5	5'-3 1/2"	28'-5 1/2"
114	2	5	5 1/2"	5'-4 1/4"	28'-11 3/4"	2	5	5'-4 1/4"	28'-9 1/4"
115	2	5	6 1/2"	5'-4 3/4"	29'-3 1/4"	2	5	5'-4 3/4"	28'-11 3/4"
116	2	5	5"	5'-5 1/2"	29'-5 1/2"	2	5	5'-5 1/2"	29'-3 1/2"
117	2	5	6"	5'-6"	29'-9"	2	5	5'-6"	29'-6"
118	2	5	5"	5'-6 1/2"	29'-10 1/2"	2	5	5'-6 1/2"	29'-8 1/2"
119	2	5	5 1/2"	5'-7 1/4"	30'-2 3/4"	2	5	5'-7 1/4"	30'-1/4"
120	2	5	6 1/2"	5'-7 3/4"	30'-6 1/4"	2	5	5'-7 3/4"	30'-2 3/4"
121	2	5	5"	5'-8 1/2"	30'-8 1/2"	2	5	5'-8 1/2"	30'-6 1/2"
122	2	5	6"	5'-9"	31'	2	5	5'-9"	30'-9"
123	2	5	7"	5'-9 1/2"	31'-3 1/2"	2	5	5'-9 1/2"	30'-11 1/2"
124	2	5	5 1/2"	5'-10 1/4"	31'-5 3/4"	2	5	5'-10 1/4"	31'-3 1/4"
125	2	5	6 1/2"	5'-10 3/4"	31'-9 1/4"	2	5	5'-10 3/4"	31'-5 3/4"
126	2	5	5"	5'-11 1/2"	31' -11 1/2"	2	5	5'-11 1/2"	31'-9 1/2"
127	2	5	6"	6'	32'-3"	2	5	6'	32'
128	2	5	7"	6'-1/2"	32'-6 1/2"	2	5	6'-1/2"	32'-2 1/2"
129	2	5	5 1/2"	6'-1 1/4"	32'-8 3/4"	2	5	6'-1 1/4"	32'-6 1/4"
130	2	5	6 1/2"	6'-1 3/4"	33'-1/4"	2	5	6'-1 3/4"	32'-8 3/4"

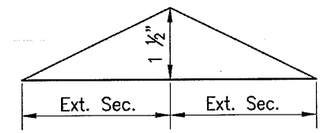

CAMBER DIAGRAM (2 Section Truss)

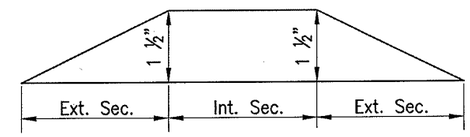

CAMBER DIAGRAM (3 Section Truss)

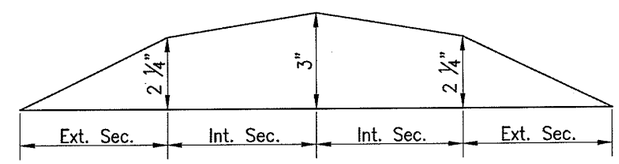

CAMBER DIAGRAM (4 Section Truss)

INDIANA DEPARTMENT OF TRANSPORTATION

SIGN BOX TRUSS STRUCTURE
TABLE OF DIMENSIONS
SPANS 86' thru 130'

DECEMBER 2008 (Revised 11/2/09)

DRAWING NO. 03

JOHN C. MAUSER REGISTERED No. 17361 STATE OF INDIANA PROFESSIONAL ENGINEER

John C. Mauser 07/18/08
DESIGN ENGINEER DATE

DESIGNED: VDB DRAWN: REM

SIGN BOX TRUSS SCHEDULE

TRUSS TYPE	MAX SIGN AREA	MAX SPAN	MAX MOUNTING HEIGHT	TRUSS MEMBERS										END SUPPORT MEMBERS						
				CHORD		VERTICAL		HORIZONTAL		VERTICAL DIAGONAL		HORIZONTAL DIAGONAL		HORIZONTAL		DIAGONAL		COLUMN		W-BEAM
			H	a		b		c		d		e		f		g		h		j
				DIA.	THK	DIA.	THK	DIA.	THK	DIA.	THK	DIA.	THK	DIA.	THK	DIA.	THK	DIA.	THK	
	SQ. FT.	FT.	FT.	IN.	IN.	IN.	IN.	IN.	IN.	IN.	IN.	IN.	IN.	IN.	IN.	IN.	IN.	IN.	IN.	
A	500	130	28' - 6"	6.00	0.250	2.50	0.250	4.00	0.188	3.00	0.375	4.00	0.375	5.00	0.375	5.00	0.375	14.00	0.500	W 8 x 58 ⑤
B	700	100	28' - 6"	6.50	0.375	3.00	0.375	4.00	0.188	3.00	0.500	4.00	0.375	5.00	0.375	7.00	0.375	14.00	0.500	
C		130	28' - 6"	7.00	0.375	3.00	0.375	4.00	0.188	3.00	0.500	4.00	0.500	5.00	0.375	8.00	0.500	14.00	0.593	
D	900	100	28' - 6"	7.00	0.375	3.00	0.375	4.00	0.188	3.00	0.500	4.00	0.500	5.00	0.375	8.00	0.500	18.00	0.500	
E		130	28' - 6"	7.00	0.500	3.00	0.375	4.00	0.25	3.00	0.500	4.00	0.500	5.00	0.375	8.00	0.593	18.00	0.562	⑤ W 10 x 68

NOTES:

1. See Drawings 01 thru 03, and 05 for dimensions and members locations.
2. See Drawings 12 & 13 for base plate and anchor bolt details.
3. See Drawing 03 for camber diagram.
4. See Drawing 16 thru 19 for foundation details.

⑤ HSS 8"x8"x1/2" for truss Type "A–D" may be used as an alternate for Member "J". HSS 10"x10"x1/2" for truss Type "E" may be used as an alternate for Member "J". Drill 1/2" diameter hole in bottom flange each end of Member "J" for drainage.

6. Truss members to be aluminum, end support members to be steel. Steel pipe diameters shown in table are nominal pipe sizes.

INDIANA DEPARTMENT OF TRANSPORTATION

SIGN BOX TRUSS STRUCTURE
TRUSS SCHEDULE

DECEMBER 2008 (Revised 1/18/10)

DRAWING NO. 04

JOHN C. MAUSER REGISTERED No. 17361 STATE OF INDIANA PROFESSIONAL ENGINEER

John C. Mauser 07/18/08
DESIGN ENGINEER DATE

DESIGNED: VDB DRAWN: REM

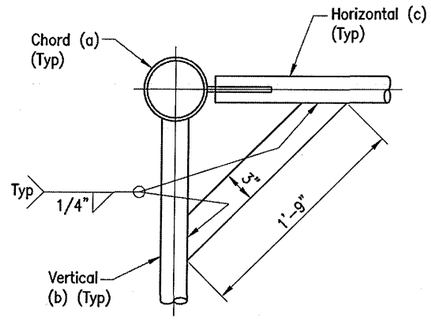

CORNER BRACE DETAIL

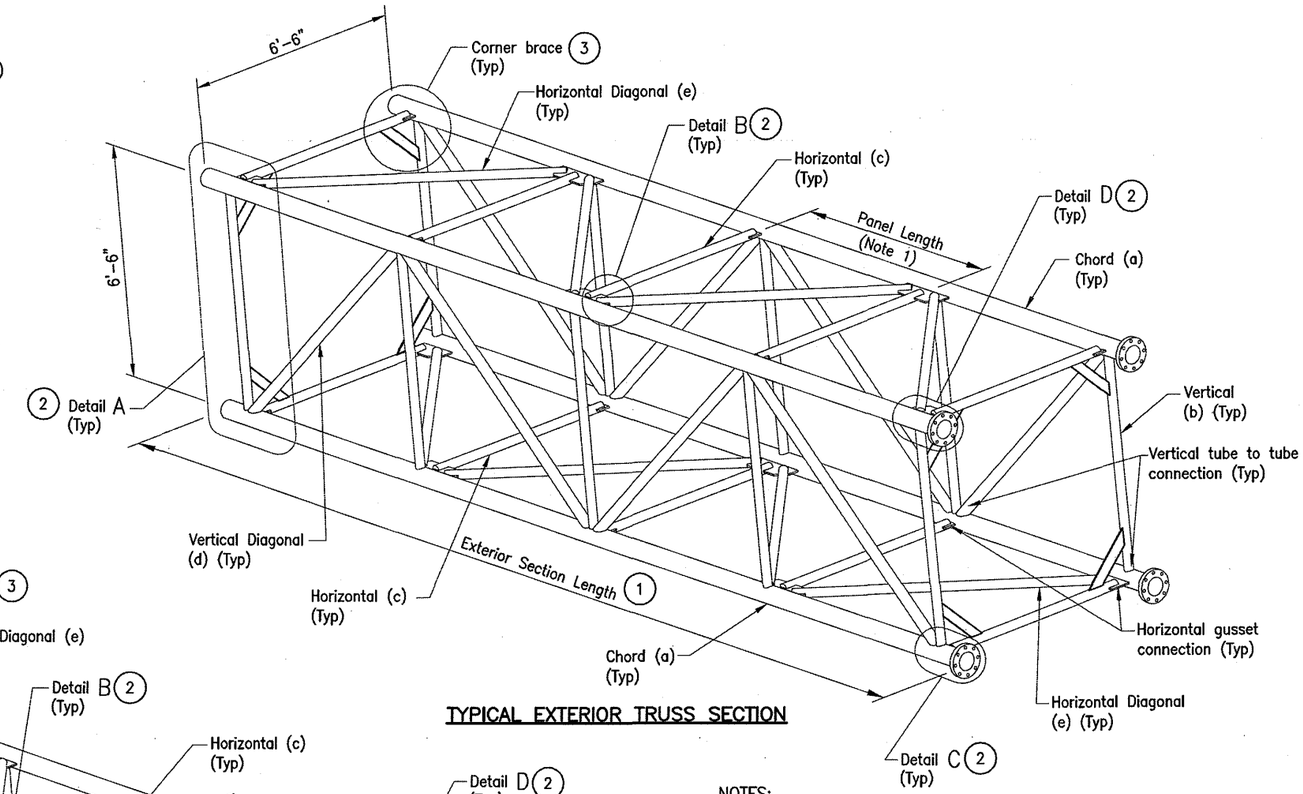

TYPICAL EXTERIOR TRUSS SECTION

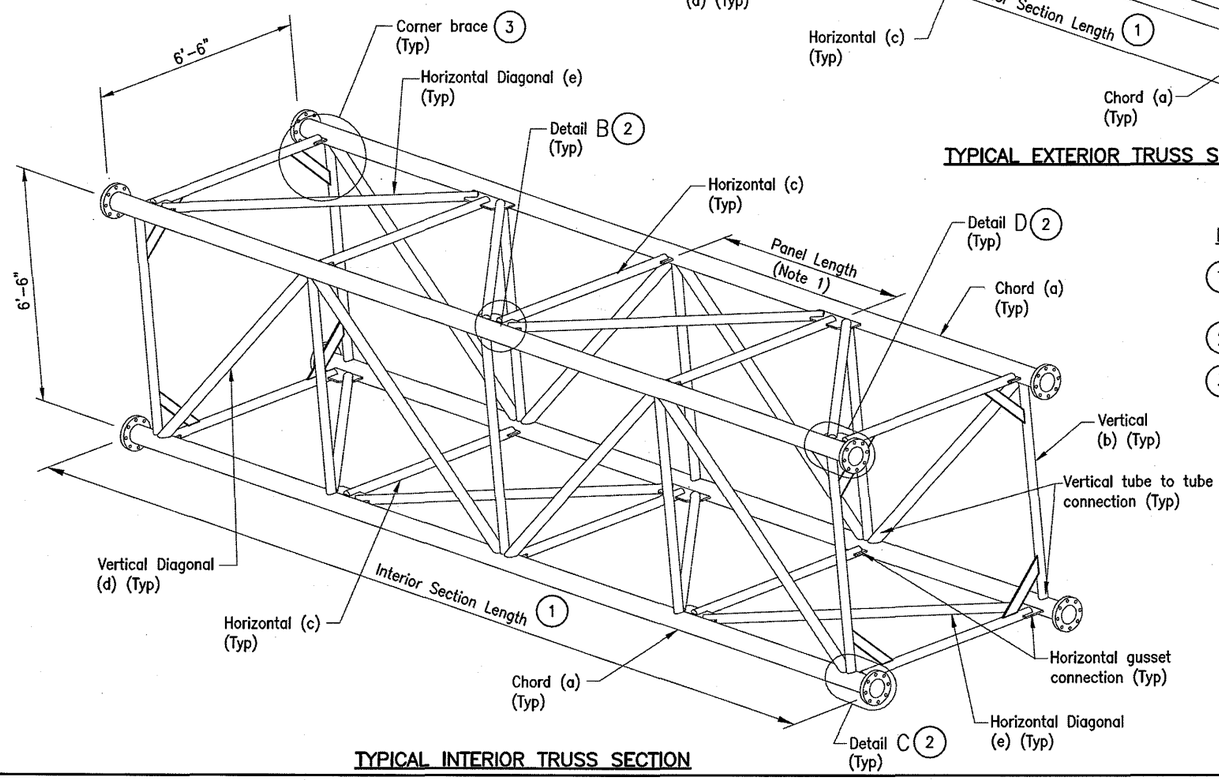

TYPICAL INTERIOR TRUSS SECTION

NOTES:

(1) See Drawing 02 and 03 for table of dimensions. Number of panels and sections varies.

(2) See Drawing 06 for Details A thru E.

(3) Repeat corner braces at each end of all sections. Brace member to be 3"x1'-9"x1/2" placed at 45° to verticals. See detail this sheet.

INDIANA DEPARTMENT OF TRANSPORTATION

SIGN BOX TRUSS STRUCTURE ISOMETRIC VIEWS

DECEMBER 2008 (Revised 11/2/09)

DRAWING NO. 05

JOHN C. MAUSER REGISTERED No. 17361 STATE OF INDIANA PROFESSIONAL ENGINEER

John C. Mauser 07/18/08
DESIGN ENGINEER DATE

DESIGNED: VDB DRAWN: REM

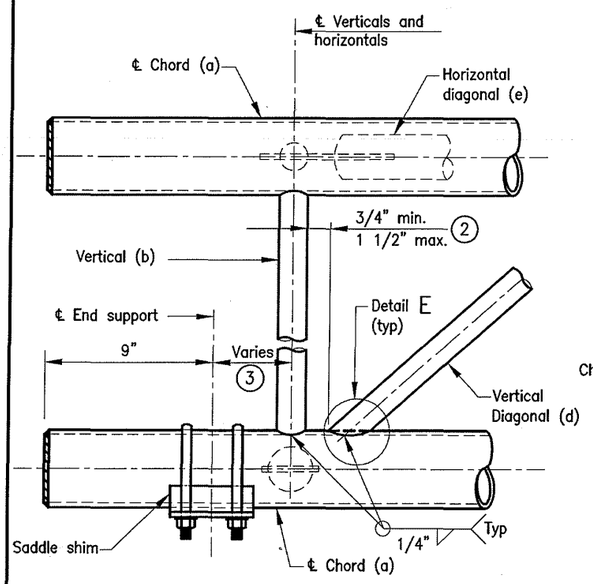

DETAIL A
EXTERIOR SECTION AT END SUPPORT

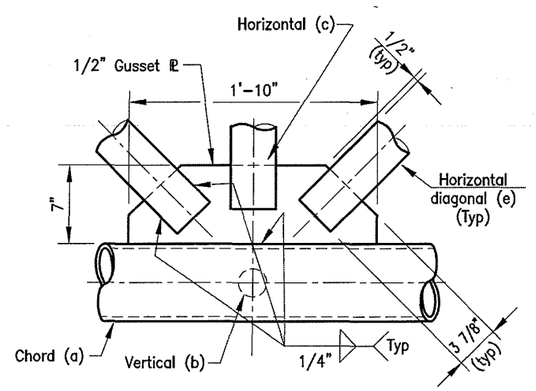

DETAIL B (PLAN VIEW)
TYPICAL PANEL CONNECTION

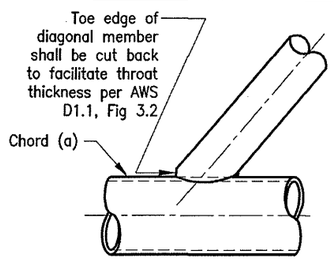

TOE EDGE – DETAIL E

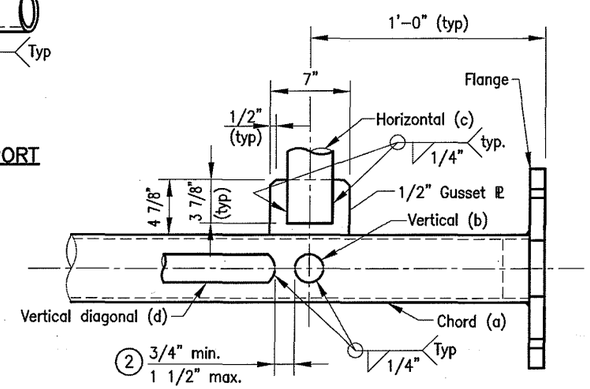

DETAIL C (PLAN VIEW)
BOTTOM CHORD AT FLANGE CONNECTION

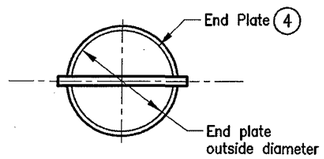

SECTION A–A

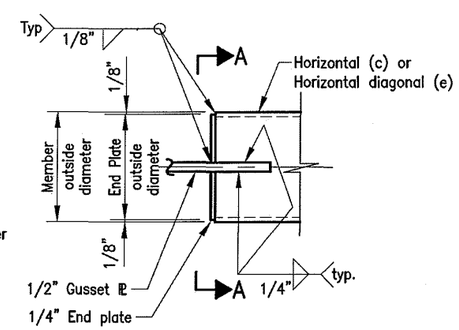

ELEVATION VIEW
TYPICAL GUSSET CONNECTION DETAIL

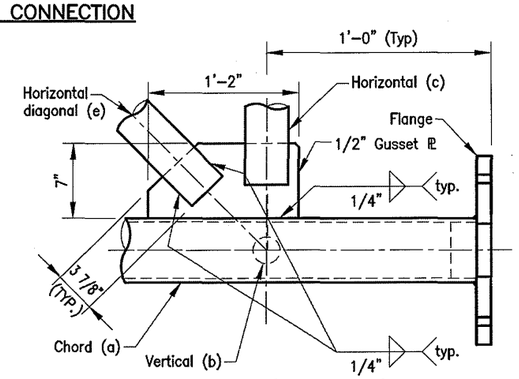

DETAIL D (PLAN VIEW)
TOP CHORD AT FLANGE CONNECTION

NOTES:

1. See Drawing 04 for schedule of truss members.
2. Vertical diagonals shall be detailed for minimum offset from the panel point based on the following: Offset shall be such as to provide a 3/4" minimum to 1 1/2" maximum clearance between any diagonal and any vertical.
3. See Drawings 02 & 03 for variable end dimension.
4. End plate may be welded as one piece and then slotted or welded as two pieces after slotting the member.

INDIANA DEPARTMENT OF TRANSPORTATION

SIGN BOX TRUSS STRUCTURE CONNECTIONS AND WELD DETAILS

DECEMBER 2008 (Revised 11/2/09)

DRAWING NO. 06

JOHN C. MAUSER REGISTERED No. 17361 STATE OF INDIANA PROFESSIONAL ENGINEER

John C. Mauser 07/18/08
DESIGN ENGINEER DATE

DESIGNED: VDB DRAWN: REM

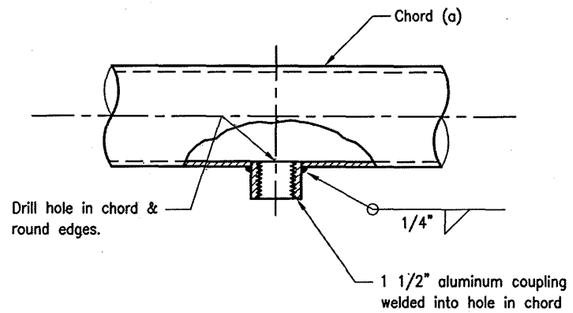

WIRE OUTLET DETAIL

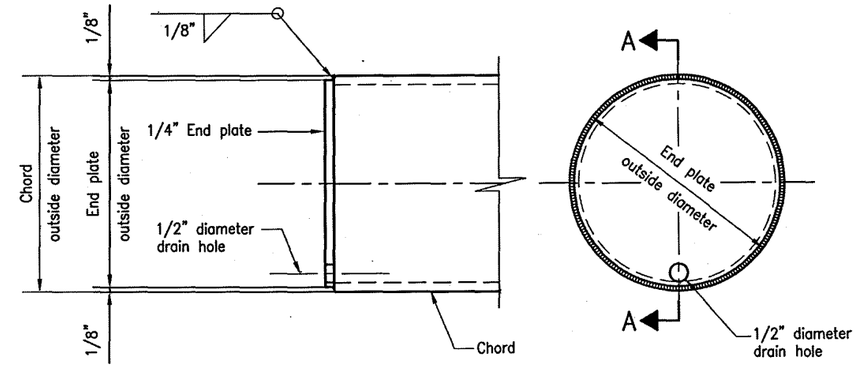

SECTION A–A

END VIEW

ALUMINUM CHORD END DETAILS

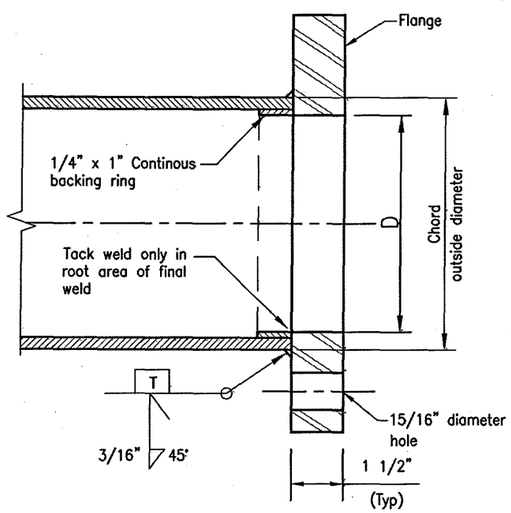

SECTION B–B

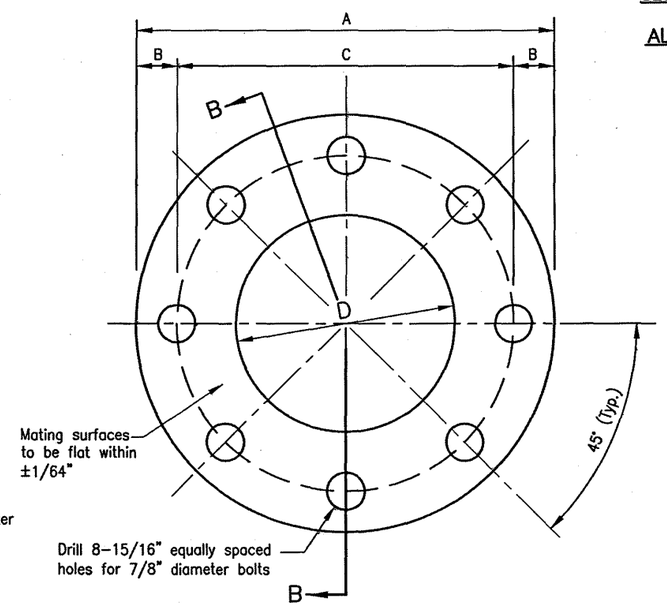

FLANGE DETAILS

NOTES:

1. See Drawing 01 for chord splice locations and wire outlets.

TABLE OF FLANGE DIMENSIONS					
TRUSS CHORD Outside Diameter	BOLT SIZE	DIMENSION (INCHES)			
		A	B	C	D
6" x 1/4"	7/8"	1'–1"	2"	9"	5"
6 1/2" x 3/8"	7/8"	1'–2"	2"	10"	5 1/4"
7" x 3/8"	7/8"	1'–2"	2"	10"	5 3/4"
7" x 1/2"	7/8"	1'–2"	2"	10"	5 1/2"

INDIANA DEPARTMENT OF TRANSPORTATION

SIGN BOX TRUSS STRUCTURE
ALUMINUM CHORD DETAILS

DECEMBER 2008 (Revised 1/18/10)

DRAWING NO. 07

JOHN C. MAUSER REGISTERED No. 17361 STATE OF INDIANA PROFESSIONAL ENGINEER

John C. Mauser 07/18/08
DESIGN ENGINEER DATE

DESIGNED: VDB DRAWN: REM

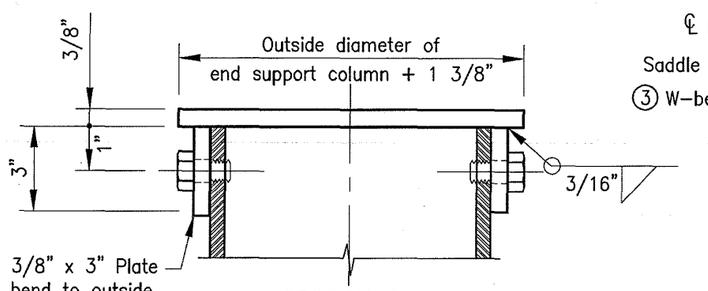

SECTION A–A

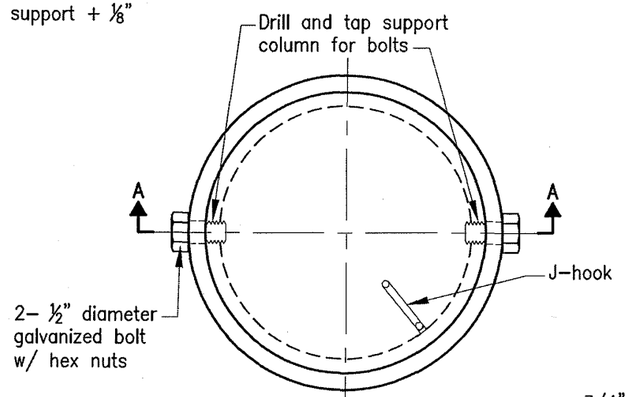

PLAN
TOP CAP – STEEL END SUPPORTS

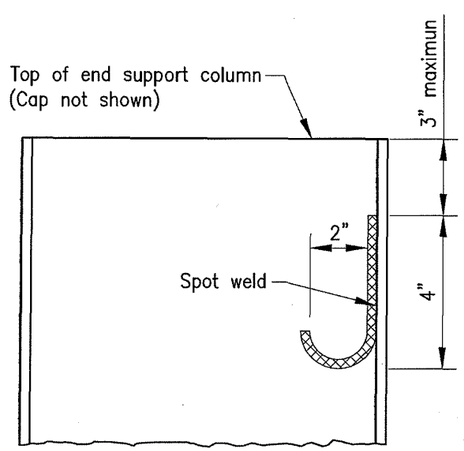

CABLE J HOOK

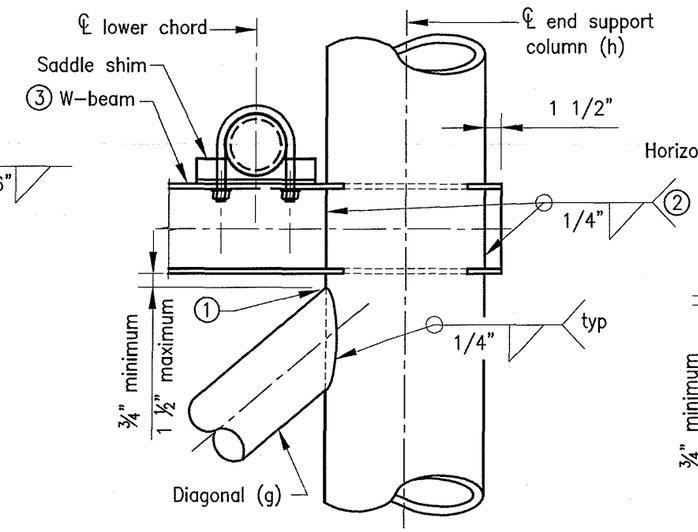

ELEVATION (END SUPPORT)
TYPICAL W BEAM CONNECTION

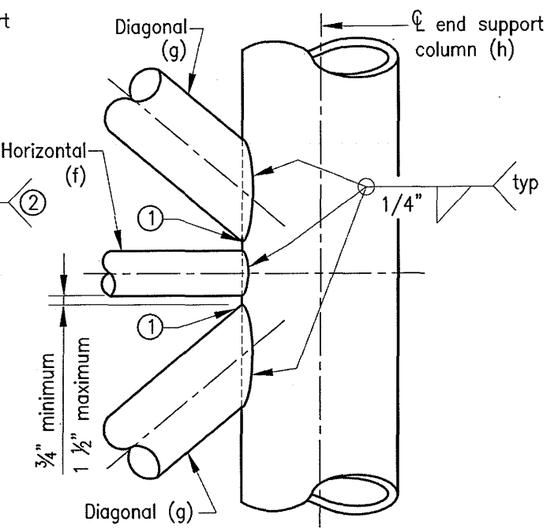

ELEVATION (END SUPPORT)
TYPICAL BRACING MEMBERS CONNECTION

NOTES:

1. Toe edge of diagonal member shall be cut back to facilitate throat thickness. See Drawing 06 for toe–edge detail.
2. Cut holes in end support columns for beams to pass through. Holes to have 1/8" maximum clearance to beam. Holes in opposite sides of column to be checked for proper alignment prior to cutting.
3. See Drawing 04 for end support member sizes.

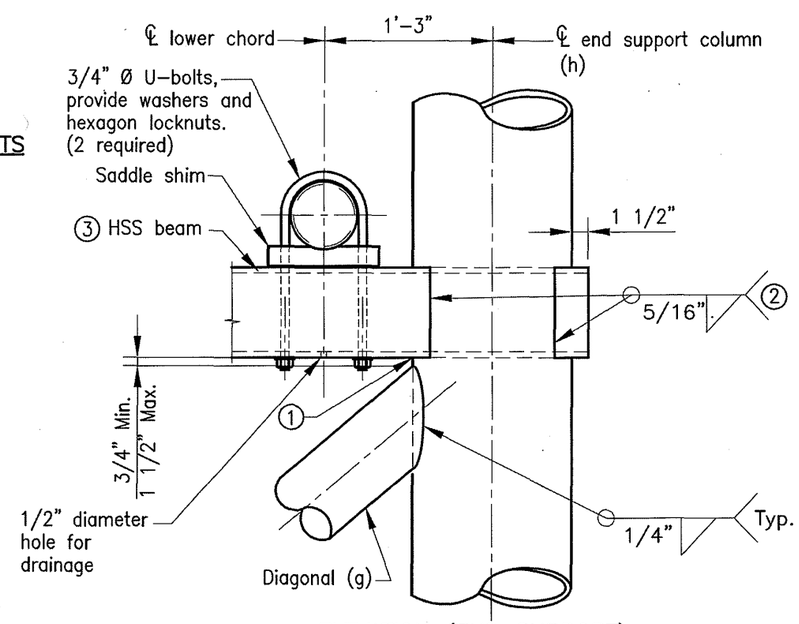

ELEVATION (END SUPPORT)
ALTERNATE HSS BEAM CONNECTION

INDIANA DEPARTMENT OF TRANSPORTATION

SIGN BOX TRUSS STRUCTURE
END SUPPORT DETAILS

DECEMBER 2008 (Revised 11/2/09)

DRAWING NO. 08

JOHN C. MAUSER REGISTERED No. 17361 STATE OF INDIANA PROFESSIONAL ENGINEER

John C. Mauser 07/18/08
DESIGN ENGINEER DATE

DESIGNED: VDB DRAWN: REM

TABLE 1 - SPACER ASSEMBLY DIMENSIONS

TRUSS TYPE	END SUPPORT COLUMN (h) SIZE (O.D.)	Z	E	L
	IN	IN.	IN.	IN.
A	14	4 1/2	7	24.0
B	14	4 1/4	7 1/2	24.0
C	14	4	8	24.0
D	18	2	8	26.0
E	18	2	8	26.0

NOTES:

1. Provide isolation from steel dissimilar metal as required.
2. For truss type D and E the 1" stem plate is not required. Fillet weld front and rear plates together.
3. "E" is equal to diameter of chord (D) plus 1"

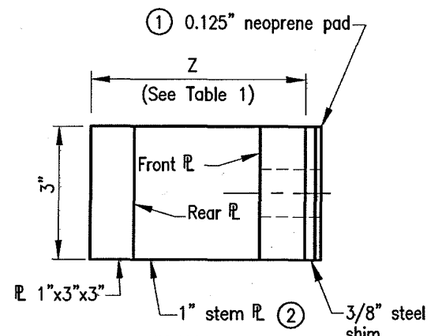

PLAN
SECTION A–A

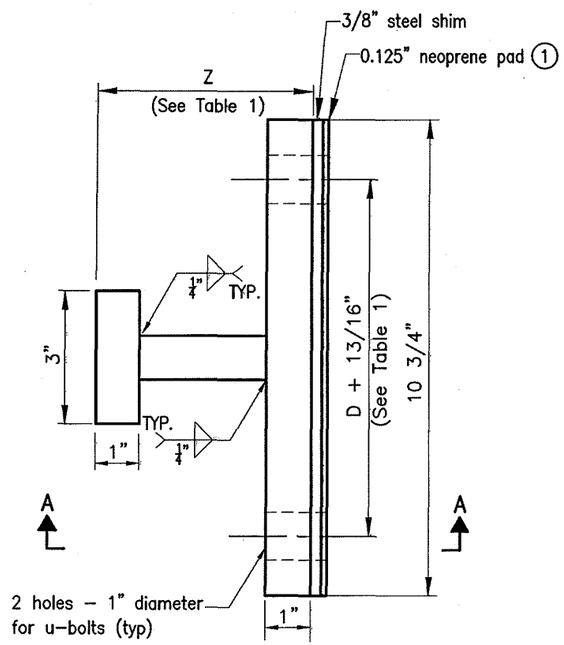

ELEVATION
END SUPPORT SPACER ASSEMBLY DETAIL

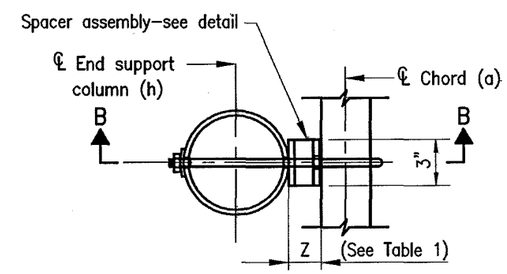

PLAN

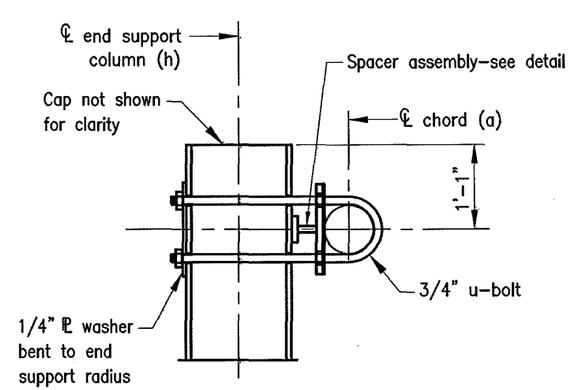

SECTION B–B
UPPER CHORD CONNECTION DETAILS

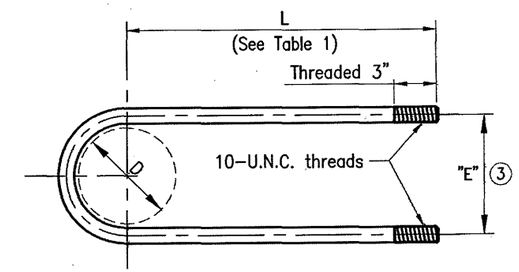

3/4" DIA. STAINLESS STEEL U–BOLT DETAIL

INDIANA DEPARTMENT OF TRANSPORTATION

SIGN BOX TRUSS STRUCTURE
TRUSS CONNECTION DETAILS

DECEMBER 2008 (Revised 1/18/10)

DRAWING NO. 09

JOHN C. MAUSER REGISTERED No. 17361 STATE OF INDIANA PROFESSIONAL ENGINEER

John C. Mauser 07/18/08
DESIGN ENGINEER DATE

DESIGNED: VDB DRAWN: REM

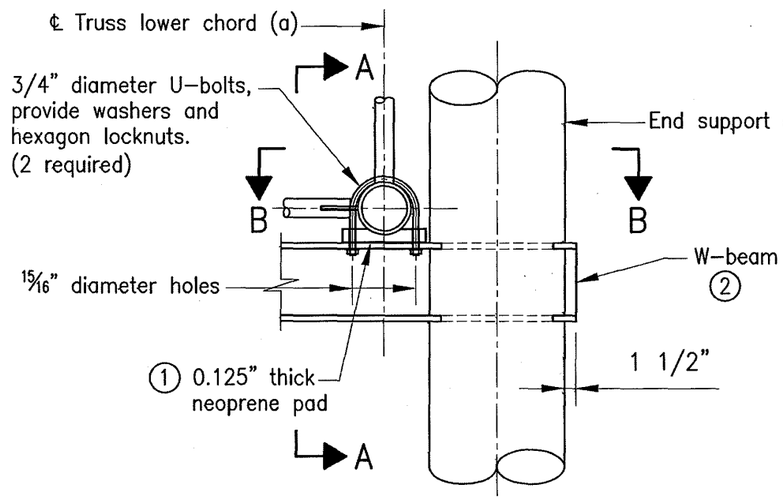

DETAIL A

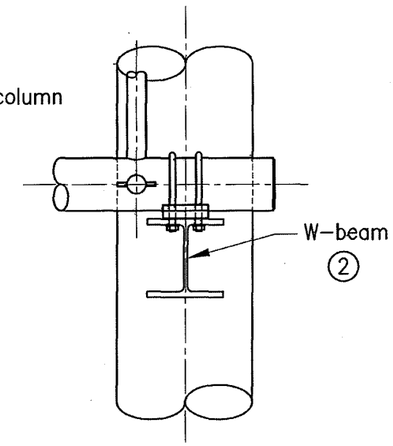

SECTION A–A

NOTES:

1. Provide neoprene pads at all chord to W-beam bearing surfaces.
2. See Drawings 04 and 08 for HSS member as alternate to W-beam.

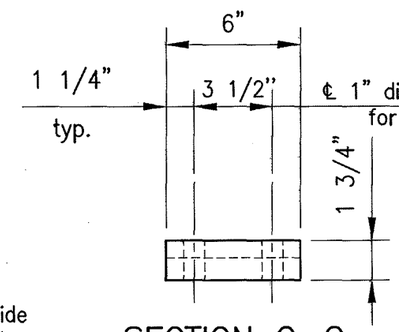

SECTION C–C

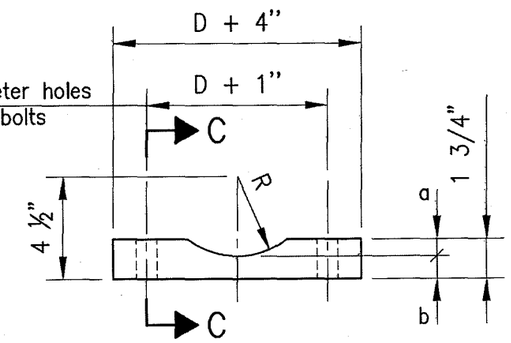

$R = D/2 + 1/32"$
D = Outside diameter of chord.
R+b = 4 1/2"

SADDLE SHIM DETAIL

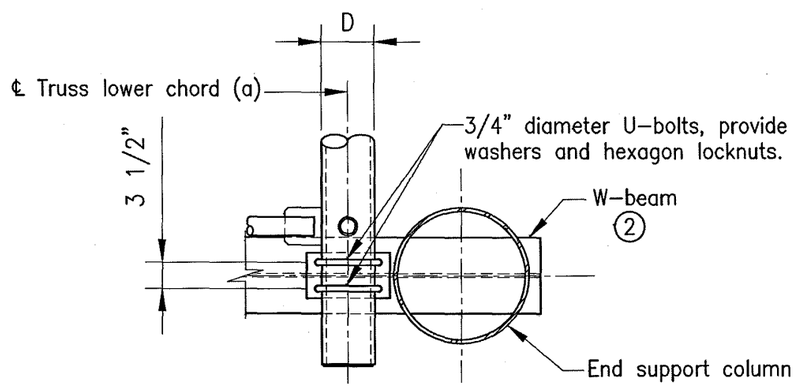

SECTION B–B
LOWER CHORD CONNECTION DETAIL

Truss Chord Outside Diameter D	a	b
6"	9/32"	1 15/32"
6 1/2"	17/32"	1 7/32"
7"	25/32"	31/32"

INDIANA DEPARTMENT OF TRANSPORTATION

SIGN BOX TRUSS STRUCTURE
TRUSS CONNECTION DETAILS

DECEMBER 2008 (Revised 1/18/10)

DRAWING NO. 10

JOHN C. MAUSER REGISTERED No. 17361 STATE OF INDIANA PROFESSIONAL ENGINEER

John C. Mauser 07/18/08
DESIGN ENGINEER DATE

DESIGNED: VDB DRAWN: REM

NOTES:

1. In lieu of fabricated handhole frame as shown, frame may be cut from 3" plate (rolling direction vertical).
2. See Standard Drawing E 802-SNWR-03 for grounding post details. Grounding post to be placed on far side of support directly opposite center of handhole.
3. See Drawing 12 for handhole locations.

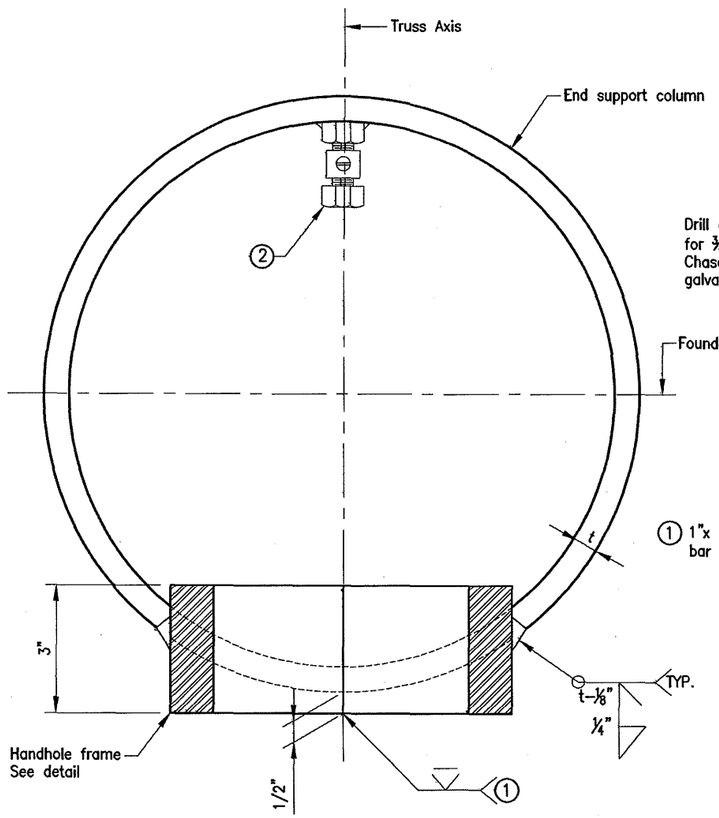

PLAN

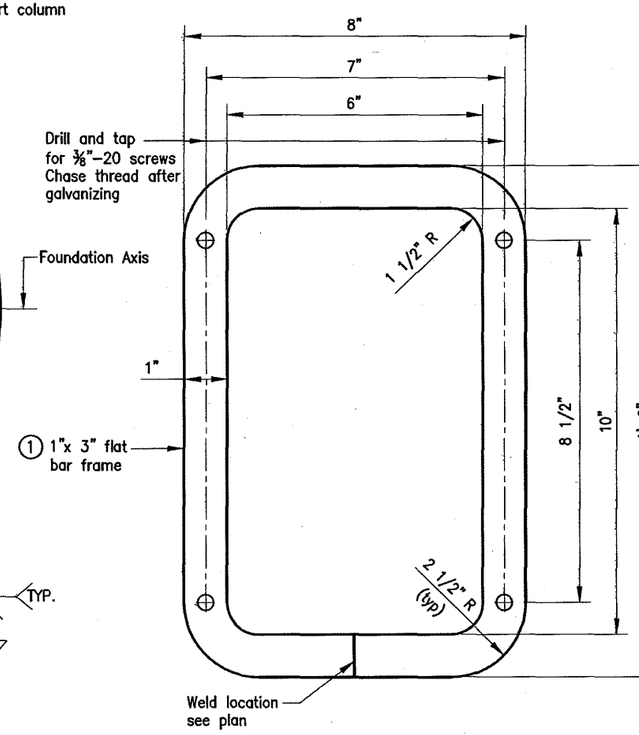

HANDHOLE FRAME DETAIL

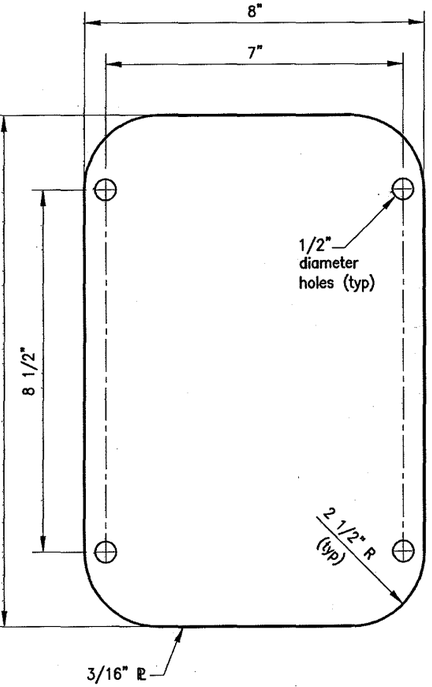

HANDHOLE COVER

INDIANA DEPARTMENT OF TRANSPORTATION

SIGN BOX TRUSS STRUCTURE
STEEL END SUPPORT HANDHOLE DETAILS

DECEMBER 2008 (Revised 1/18/10)

DRAWING NO. 11

JOHN C. MAUSER REGISTERED No. 17361 STATE OF INDIANA PROFESSIONAL ENGINEER

John C. Mauser 07/18/08
DESIGN ENGINEER DATE

DESIGNED: VDB DRAWN: REM

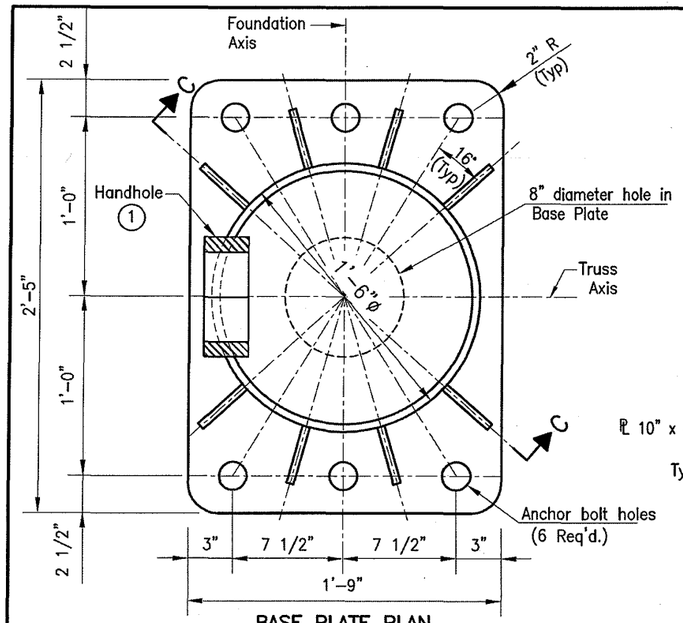

BASE PLATE PLAN
STEEL END SUPPORT
TYPE A

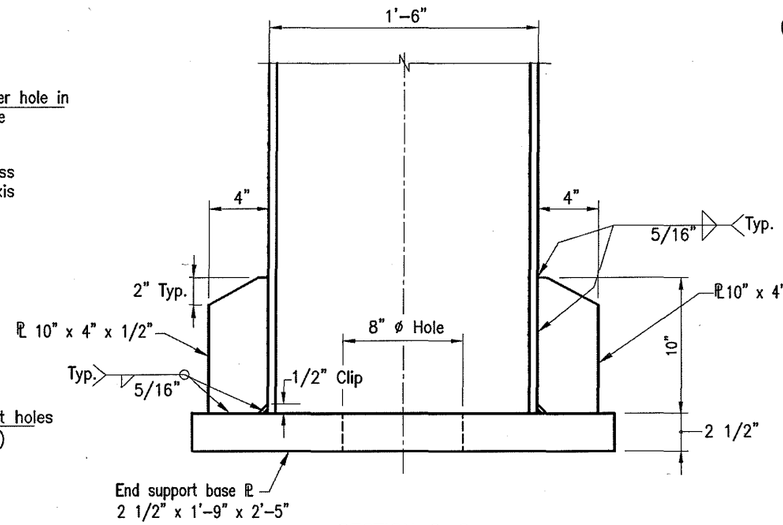

SECTION C-C

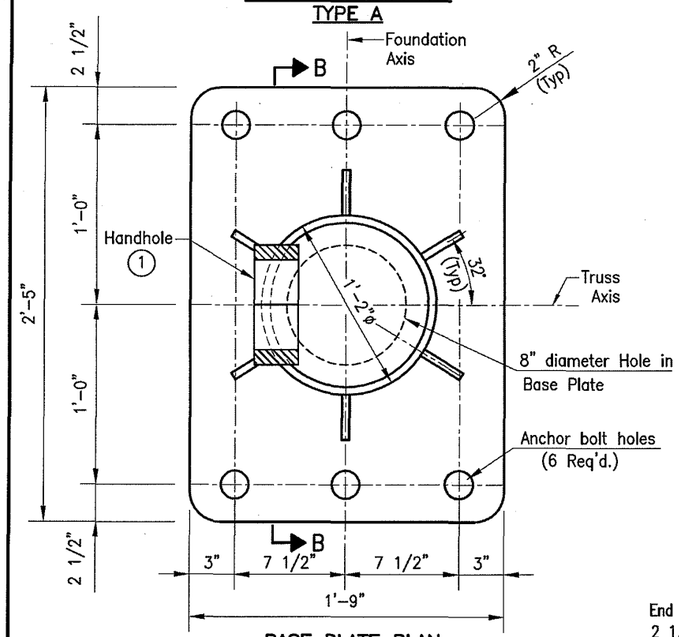

BASE PLATE PLAN
STEEL END SUPPORT
TYPE B

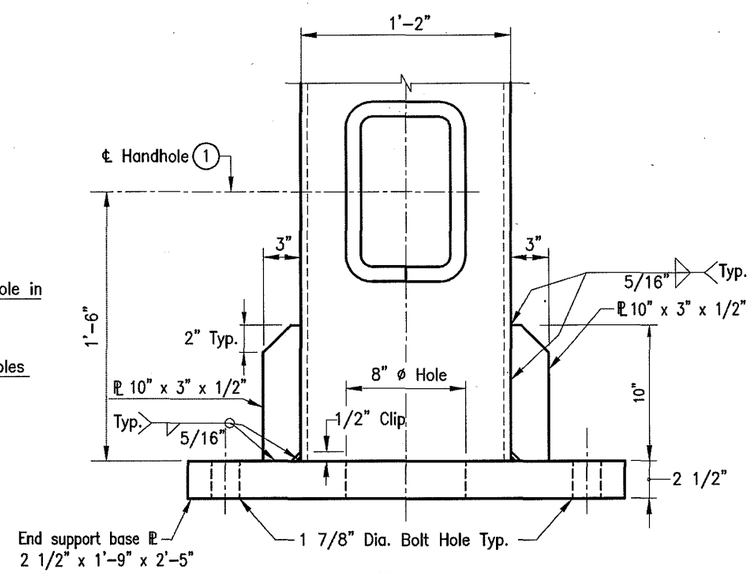

SECTION B-B

NOTES:

1. See Drawing 11 for handhole details.
2. Use Type A Base Plate for End Supports with 18" diameter columns and Type B for 14" diameter columns.
3. Each end support shall have one handhole at the column base. Handhole shall be placed on the column adjacent to the sign.

INDIANA DEPARTMENT OF TRANSPORTATION

SIGN BOX TRUSS STRUCTURE
STEEL END SUPPORT BASE DETAILS

DECEMBER 2008 (Revised 11/2/09)

DRAWING NO. 12

JOHN C. MAUSER REGISTERED No. 17361 STATE OF INDIANA PROFESSIONAL ENGINEER

John C. Mauser 07/18/08
DESIGN ENGINEER DATE

DESIGNED: VDB DRAWN: REM

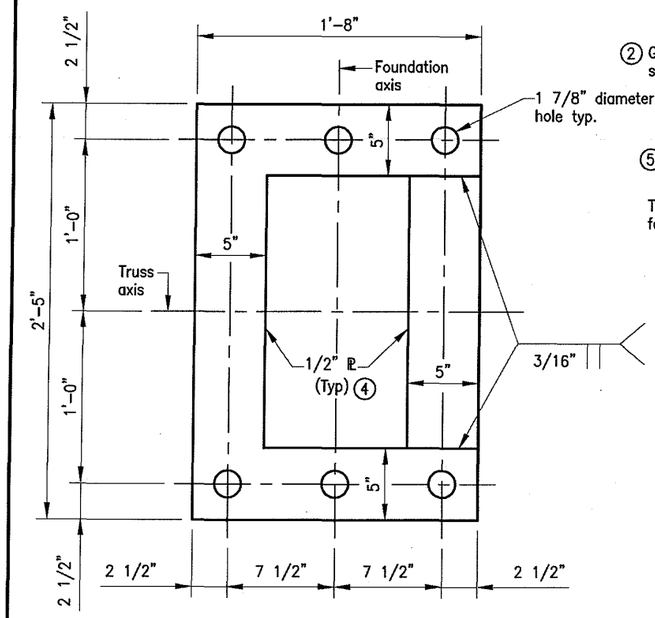

TEMPORARY POSITIONING PLATE

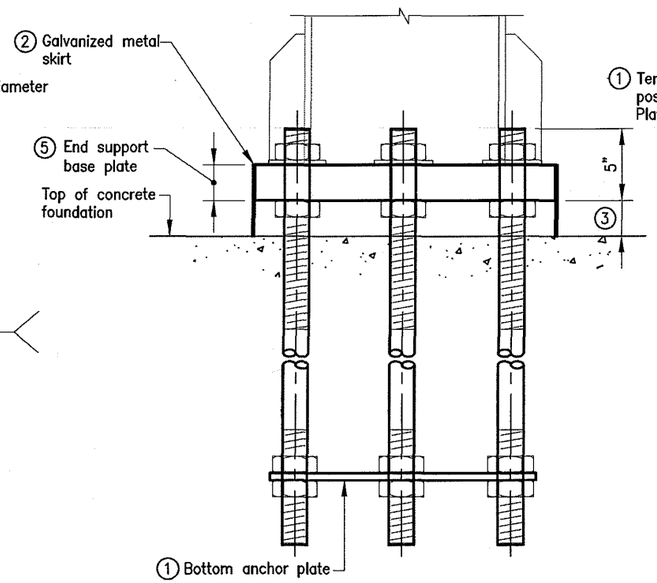

ANCHOR BOLT DETAILS
AFTER CONCRETE PLACEMENT

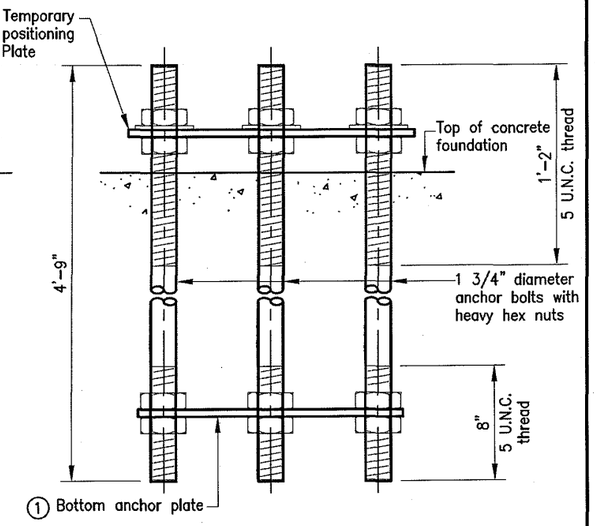

ANCHOR BOLT DETAILS
BEFORE CONCRETE PLACEMENT

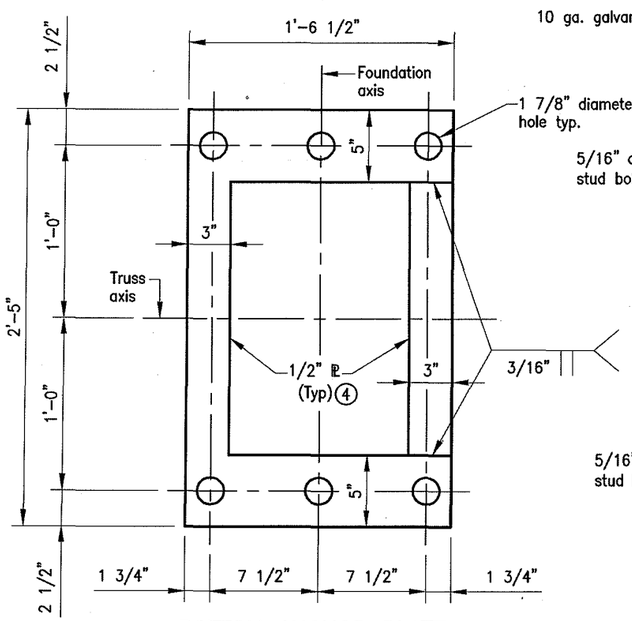

BOTTOM ANCHOR PLATE

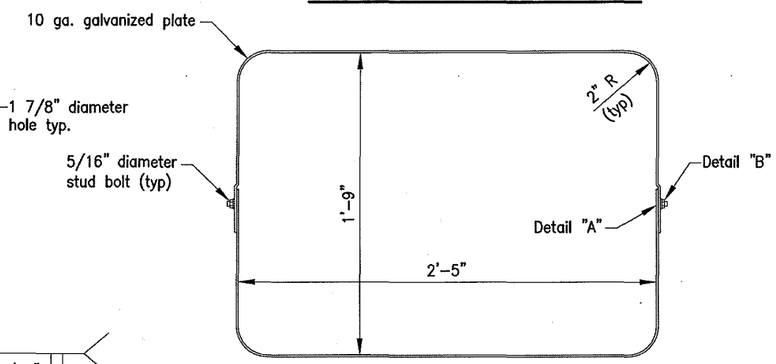

SKIRT DETAIL

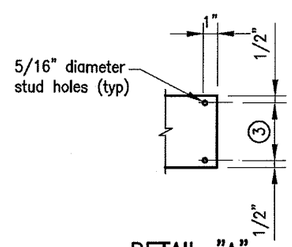

DETAIL "A"

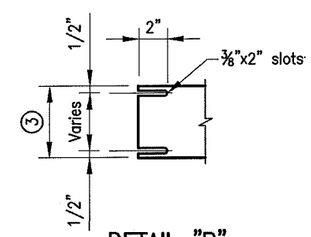

DETAIL "B"

NOTES:

(1) Use temporary positioning plate and bottom anchor plate for all foundations. Temporary positioning plate should be removed after placing concrete.

(2) Secure galvanized metal skirt to base plate after erection as show in skirt detail.

(3) Minimum base plate gap is 2 1/2" and can be increased up to 5 1/2". Metal skirt width shall be at least 1 1/2" more than the actual gap.

(4) Optionally may use four separate bars. Weld to maintain angles and shapes as shown.

(5) For end support base plate details see Drawing 12.

INDIANA DEPARTMENT OF TRANSPORTATION

SIGN BOX TRUSS STRUCTURE
STEEL END SUPPORT BASE DETAILS

DECEMBER 2008 (Revised 11/2/09)

DRAWING NO. 13

JOHN C. MAUSER REGISTERED No. 17361 STATE OF INDIANA PROFESSIONAL ENGINEER

John C. Mauser 07/18/08
DESIGN ENGINEER DATE

DESIGNED: VDB DRAWN: REM

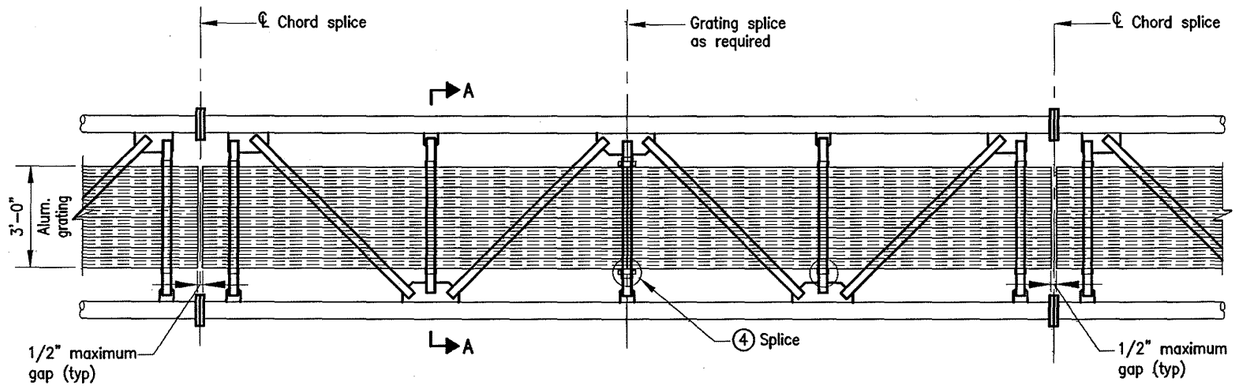

WALKWAY GRATING PLAN

Notes:

1. Interior walkway gratings are extruded I-Bars 2" x 1/4" – 1 3/16" center to center, cross bars shall have a maximum gap of 4".
   Moment of inertia, Ix = 1.382 in.^{4}
   A different grating of equal strength may be used upon approval.
2. Walkway grating top surface shall be deformed to allow for better traction.
3. ③ Walkway grating width is nominal and may vary ± 1/2" based on available standard widths.
4. ④ Interior walkway gratings can be spliced on center of any horizontal truss members as needed. See Drawing 15 for typical interior walkway grating splice detail.
5. Interior walkway grating shall run the full length center to center of End-support truss members plus 9" at each end.

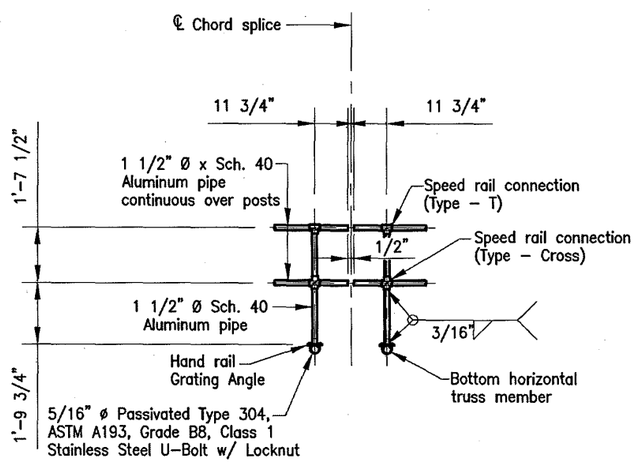

TYPICAL HANDRAIL DETAIL

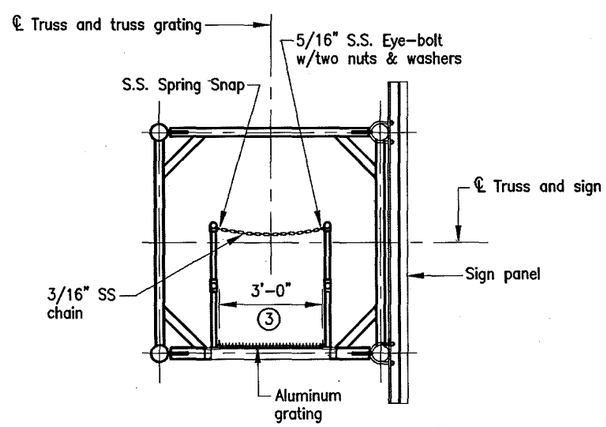

SECTION A-A

INDIANA DEPARTMENT OF TRANSPORTATION	
SIGN BOX TRUSS STRUCTURE INTERIOR WALKWAY GRATING PLAN DECEMBER 2008 (Revised 1/18/10)	
DRAWING NO. 14	
JOHN C. MAUSER REGISTERED No. 17361 STATE OF INDIANA PROFESSIONAL ENGINEER	John C. Mauser 07/18/08 DESIGN ENGINEER DATE
	DESIGNED: VDB DRAWN: REM

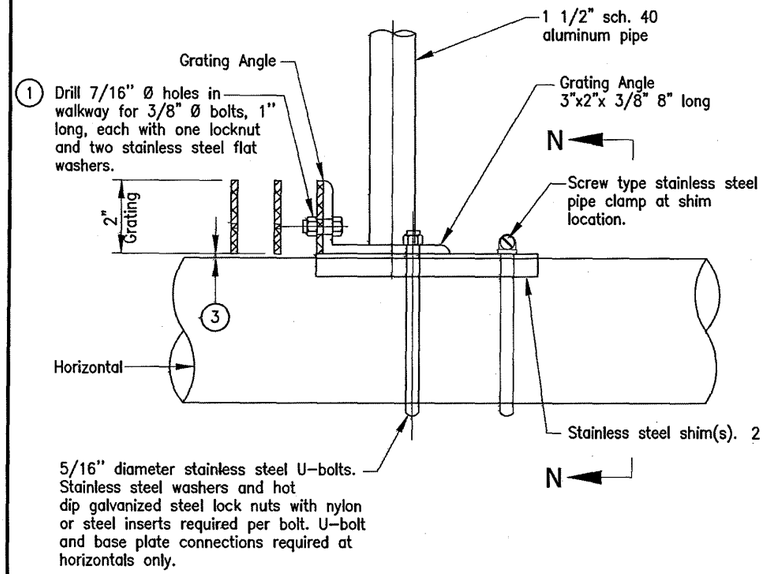

GRATNG SUPPORT DETAIL

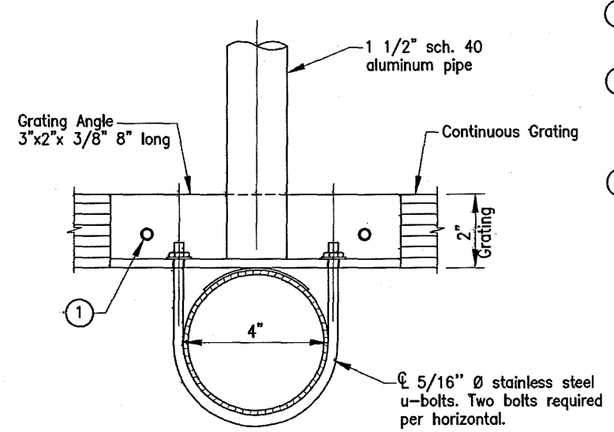

SECTION N-N

Notes:

(1) Drilling holes in grating may be done in shop or field, based on Contractor's preference and subject to accurate alignment.

(2) Stainless steel shims may be placed as shown in Details if needed to compensate for alignment variations between horizontal and diagonal pipes beyond adjustment provided by angles. Thicker shims may be used subject to shims performing properly.

(3) Pipe to grating gap may vary from 0 to 1/2", max. to align walkway, allow for camber, etc.

4. All materials shall be Aluminum 6061-T6 unless otherwise noted.

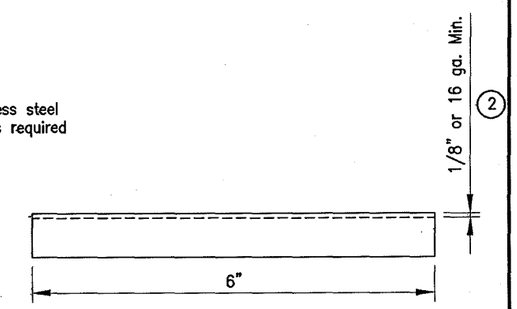

ELEVATION

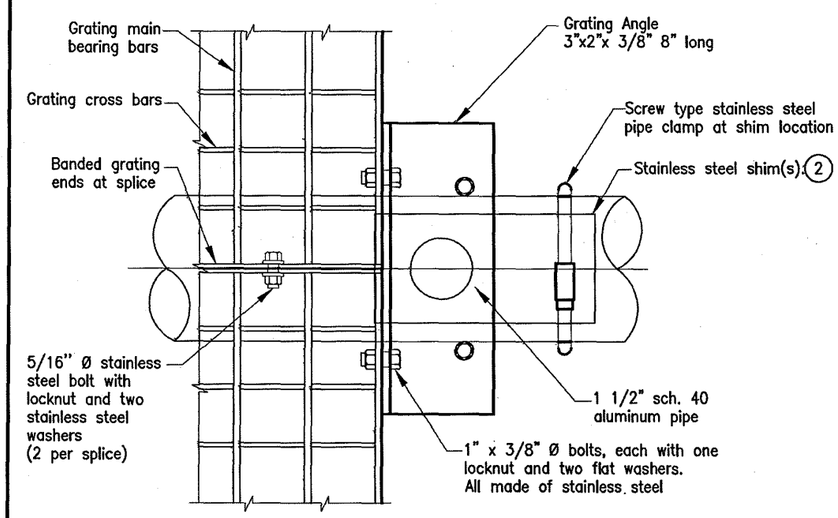

GRATING SPLICE DETAIL

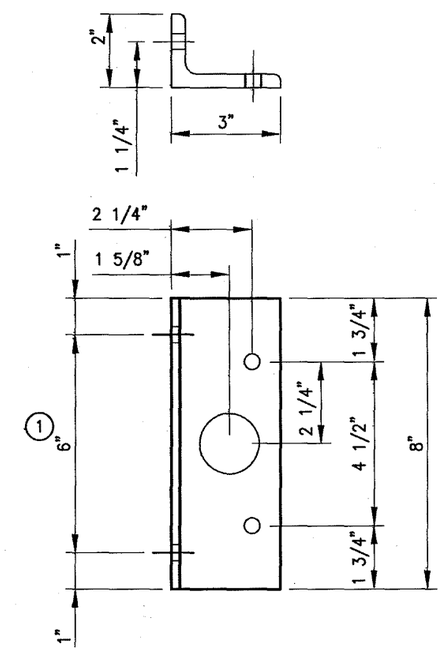

GRATING ANGLE

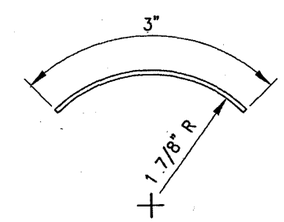

END VIEW

SHIM DETAIL

INDIANA DEPARTMENT OF TRANSPORTATION

SIGN BOX TRUSS STRUCTURE
INTERIOR WALKWAY GRATING DETAILS

DECEMBER 2008 (Revised 1/18/10)

DRAWING NO. 15

JOHN C. MAUSER REGISTERED No. 17361 STATE OF INDIANA PROFESSIONAL ENGINEER

John C. Mauser 07/18/08
DESIGN ENGINEER DATE

DESIGNED: VDB DRAWN: REM

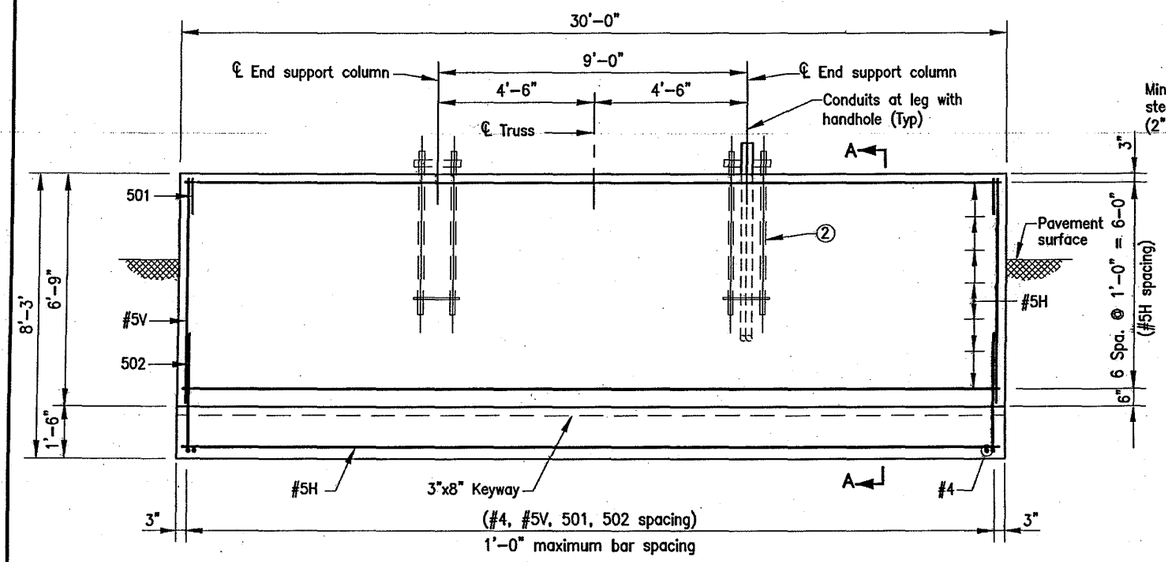

SECTION C–C

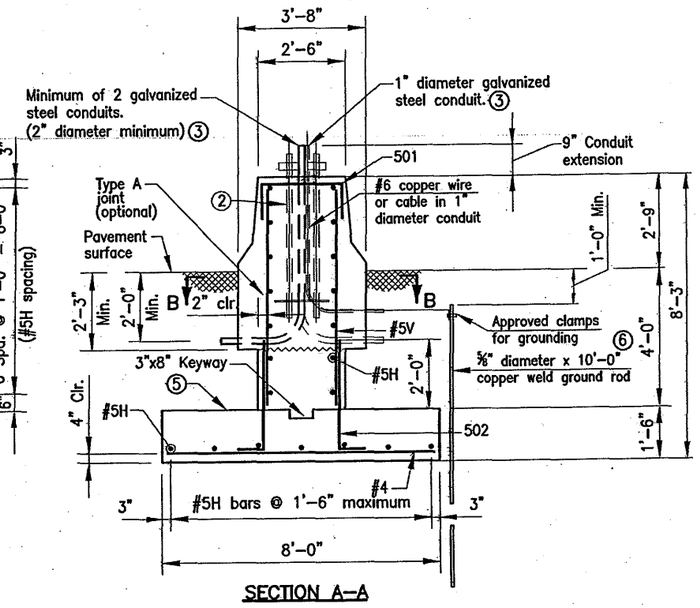

SECTION A–A

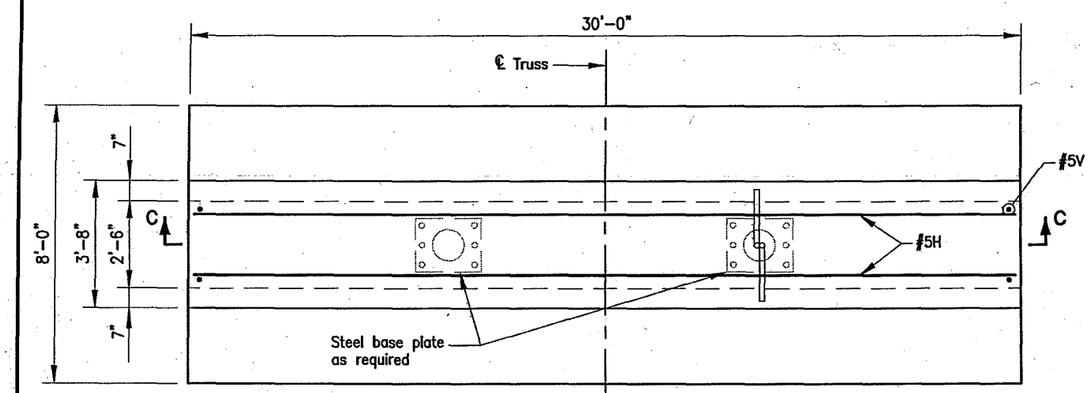

SECTION B–B

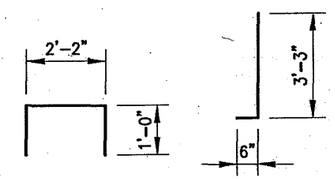

501 x 4'-2" 502 x 3'-9"

Notes:

1 See Standard Drawing E 602–CCMB–03 for barrier wall width transition.

② See Drawing 13 for anchor bolts.

③ Thread and cap both ends of steel conduit.

4 See Drawing 19 for reinforcing schedule.

⑤ The top of the footing shall be a minimum of 4'–0" below the pavement or ground surface.

⑥ Only one ground rod per structure is required.

Legend:

H = Horizontal bar

V = Vertical bar

INDIANA DEPARTMENT OF TRANSPORTATION

SIGN BOX TRUSS STRUCTURE FOUNDATION AT 33" CONCRETE BARRIER WALL

DECEMBER 2008 (Revised 11/2/09)

DRAWING NO. 16

JOHN C. MAUSER REGISTERED No. 17361 STATE OF INDIANA PROFESSIONAL ENGINEER

John C. Mauser 9/24/08
DESIGN ENGINEER DATE

DESIGNED: VDB DRAWN: REM

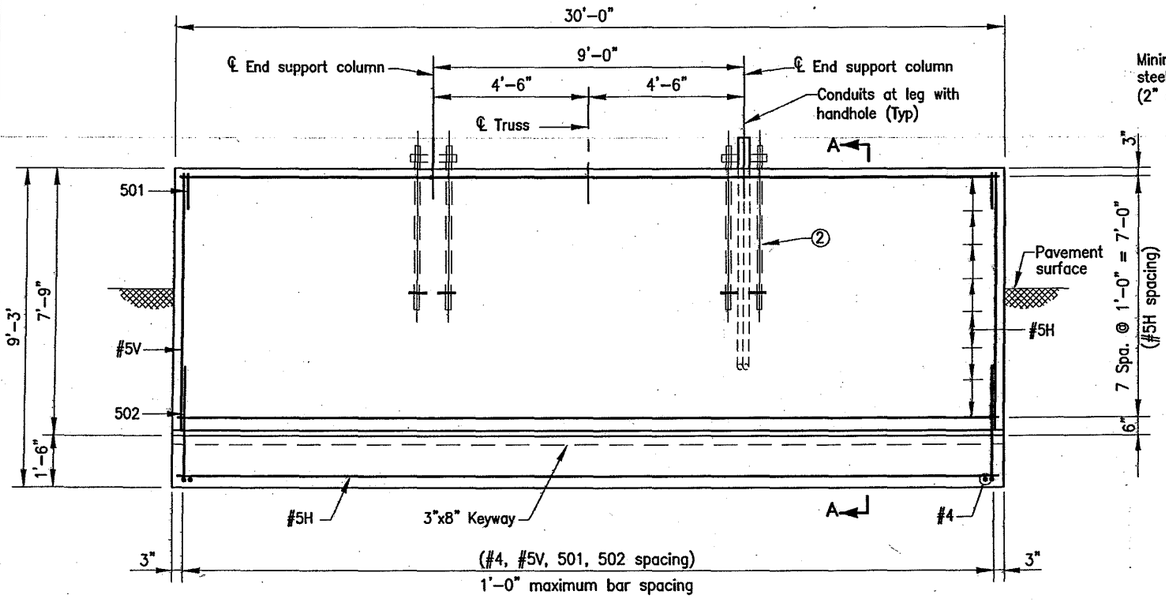

SECTION C–C

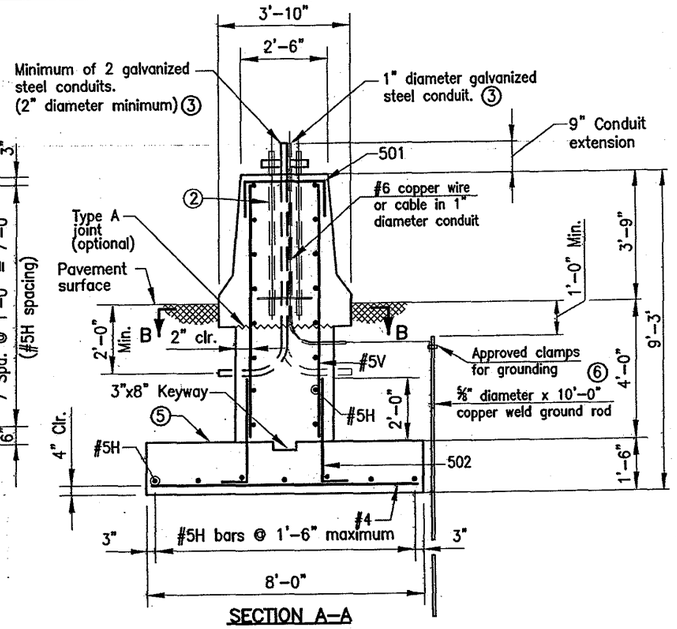

SECTION A–A

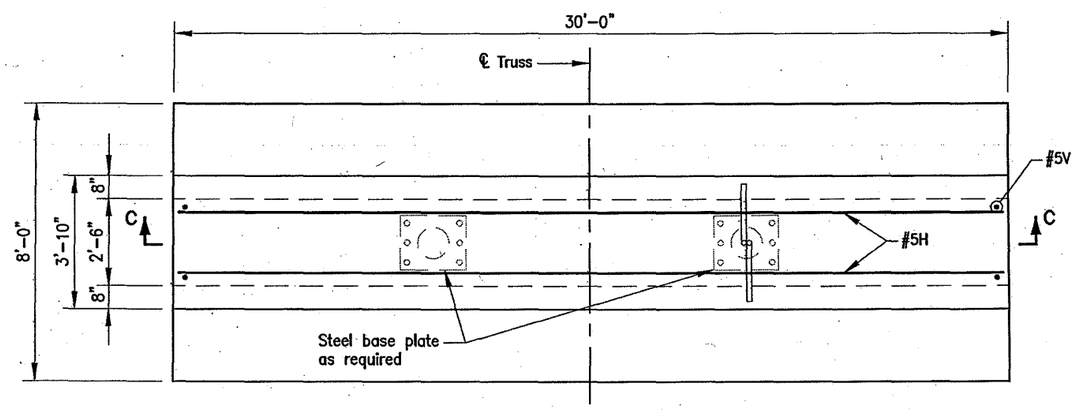

SECTION B–B

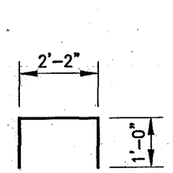

501 x 4'-2"

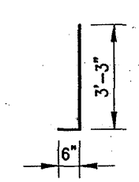

502 x 3'-9"

Notes:

1 See Standard Drawing E 602–CCMB–03 for barrier wall width transition.

② See Drawing 13 for anchor bolts.

③ Thread and cap both ends of steel conduit.

4 See Drawing 19 for reinforcing schedule.

⑤ The top of the footing shall be a minimum of 4'–0" below the pavement or ground surface.

⑥ Only one ground rod per structure is required.

Legend:

H = Horizontal bar

V = Vertical bar

INDIANA DEPARTMENT OF TRANSPORTATION

SIGN BOX TRUSS STRUCTURE FOUNDATION AT 45" CONCRETE BARRIER WALL

DECEMBER 2008 (Revised 11/2/09)

DRAWING NO. 17

JOHN C. MAUSER REGISTERED No. 17361 STATE OF INDIANA PROFESSIONAL ENGINEER

John C. Mauser 9/24/08
DESIGN ENGINEER DATE

DESIGNED: VDB DRAWN: REM

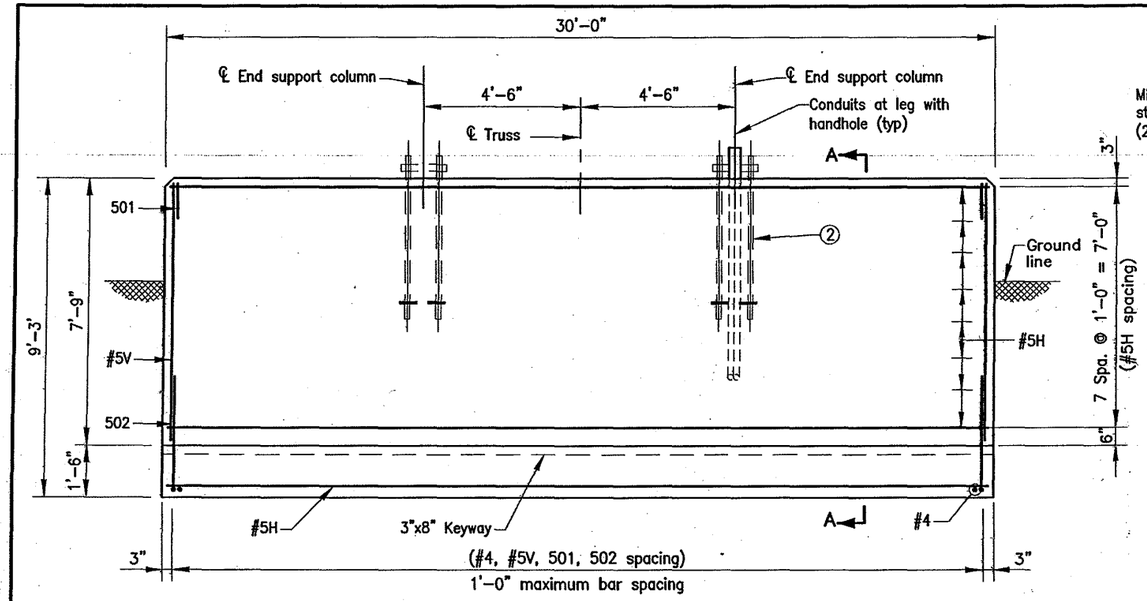

SECTION C–C

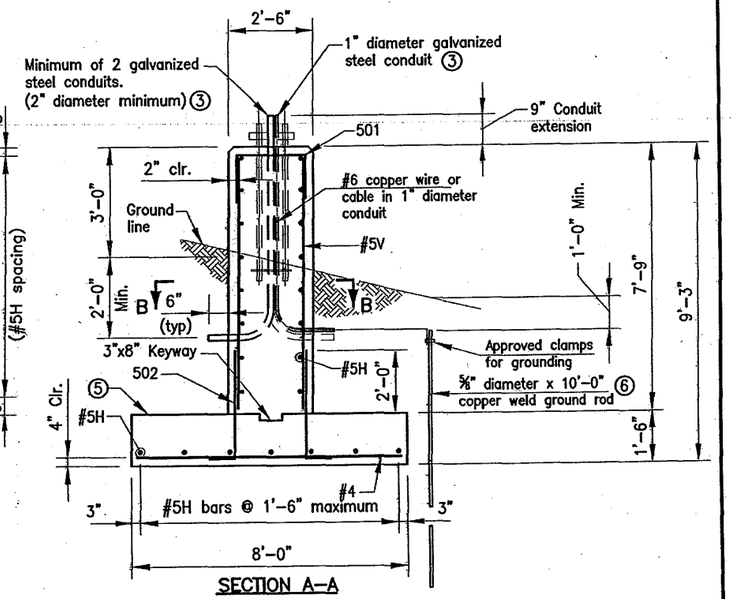

SECTION A–A

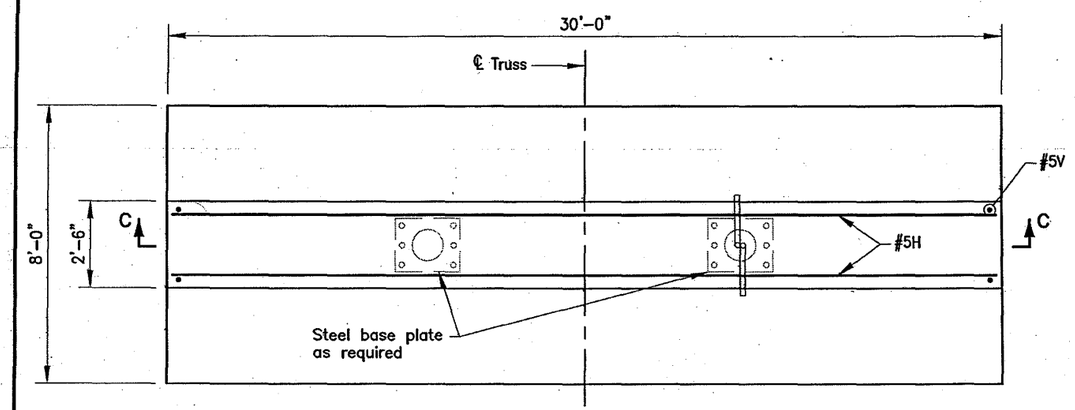

SECTIONB–B

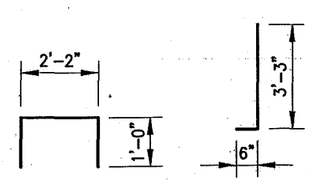

501 x 4'-2" 502 x 3'-9"

Notes:

1 See Standard Drawing E 602–CCMB–03 for barrier wall width transition.

② See Drawing 13 for anchor bolts.

③ Thread and cap both ends of steel conduit.

4 See Drawing 19 for reinforcing schedule.

⑤ The top of the footing shall be a minimum of 4'-0" below the pavement or ground surface.

⑥ Only one ground rod per structure is required.

Legend:

H = Horizontal bar

V = Vertical bar

INDIANA DEPARTMENT OF TRANSPORTATION

SIGN BOX TRUSS STRUCTURE FOUNDATION AT 36" MEDIAN OR SHOULDER

DECEMBER 2008 (Revised 11/2/09)

DRAWING NO. 18

JOHN C. MAUSER REGISTERED No. 17361 STATE OF INDIANA PROFESSIONAL ENGINEER

John C. Mauser 9/24/09
DESIGN ENGINEER DATE

DESIGNED: VDB DRAWN: REM

FOUNDATION AT 33" CONCRETE BARRIER WALL			
EPOXY COATED REINFORCING			
SIZE & MARK	NO. OF BARS	LENGTH (FT. & IN.)	WEIGHT (LBS.)
#4	31	7 ' - 8 "	
TOTAL #4			159
501	31	4 ' - 2 "	
502	62	4 ' - 1 "	
#5V	62	6 ' - 6 "	
#5H	20	29 ' - 8 "	
TOTAL #5			1438
TOTAL EPOXY COATED REINFORCING			1597
CONCRETE			
CONCRETE , CLASS "A" (CYS)			35.8
MISCELLANEOUS			
SURFACE SEAL (SYS)			27.6

FOUNDATION AT 45" CONCRETE BARRIER WALL			
EPOXY COATED REINFORCING			
SIZE & MARK	NO. OF BARS	LENGTH (FT. & IN.)	WEIGHT (LBS.)
#4	31	7 ' - 8 "	
TOTAL #4			159
501	31	4 ' - 2 "	
502	62	4 ' - 1 "	
#5V	62	7 ' - 6 "	
#5H	22	29 ' - 8 "	
TOTAL #5			1565
TOTAL EPOXY COATED REINFORCING			1724
CONCRETE			
CONCRETE , CLASS "A" (CYS)			37.6
MISCELLANEOUS			
SURFACE SEAL (SYS)			34.3

FOUNDATION AT 36" MEDIAN OR SHOULDER			
EPOXY COATED REINFORCING			
SIZE & MARK	NO. OF BARS	LENGTH (FT. & IN.)	WEIGHT (LBS.)
#4	31	7 ' - 8 "	
TOTAL #4			159
501	31	4 ' - 2 "	
502	62	4 ' - 1 "	
#5V	62	8 ' - 1 "	
#5H	24	29 ' - 8 "	
TOTAL #5			1665
TOTAL EPOXY COATED REINFORCING			1824
CONCRETE			
CONCRETE , CLASS "A" (CYS)			34.9
MISCELLANEOUS			
SURFACE SEAL (SYS)			28.3

INDIANA DEPARTMENT OF TRANSPORTATION

SIGN BOX TRUSS STRUCTURE
SPREAD FOOTING QUANTITIES

DECEMBER 2008 (Revised 11/2/09)

DRAWING NO. 19

JOHN C. MAUSER REGISTERED No. 17361 STATE OF INDIANA PROFESSIONAL ENGINEER

John C. Mauser 9/24/08
DESIGN ENGINEER DATE

DESIGNED: VDB DRAWN: REM

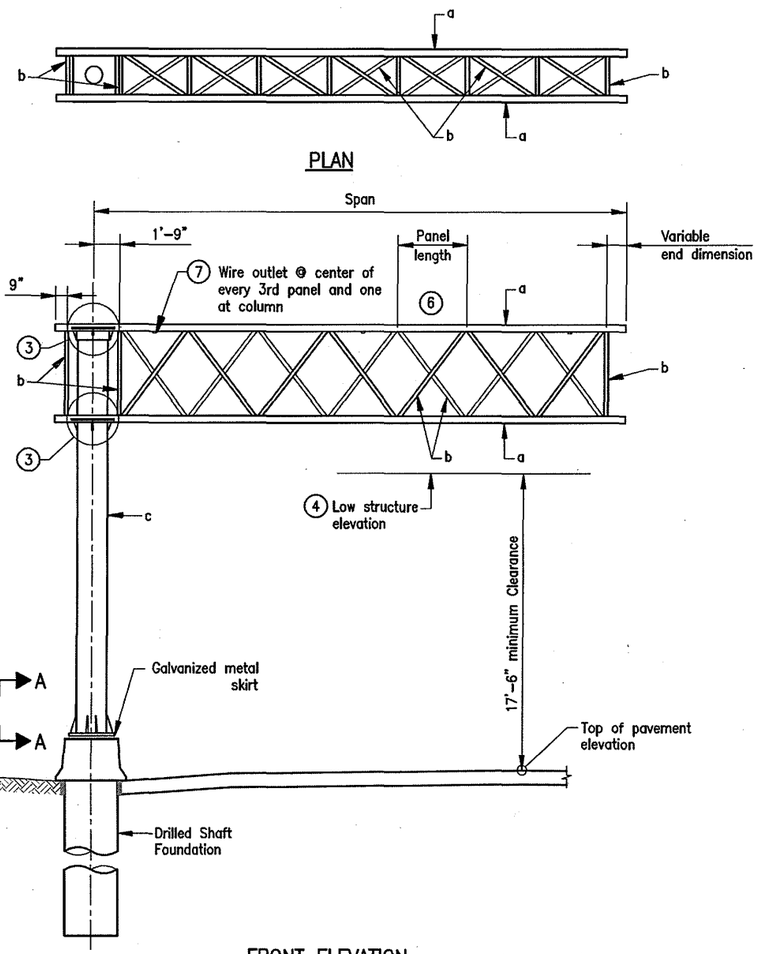

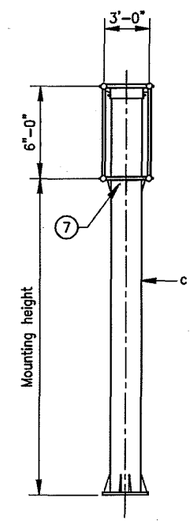

NOTES:

1 See Drawing 03 for dimensions and member sizes.

2 Maximum deviation of any chord from a straight line shall be 1/8".

3 See Drawings 04, 05 and 06 for quadri-chord arm connection details.

4 See Standard Drawing E 802-SNWW-01 through 11 for sign support and placement details.

5 All cantilever structure members are steel.

6 Number of panels varies. See Drawing 03 for table of dimensions.

7 See Drawing 06 for wire outlet detail.

LEGEND:

a – Chord members

b – Interior members:
(Verticals and Vertical Diagonals in front and back faces, and Horizontals and Horizontal Diagonals in top and bottom faces) of quadri-chord arm

c – Column

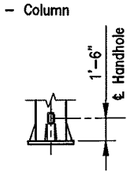

ELEVATION A–A

INDIANA DEPARTMENT OF TRANSPORTATION

CANTILEVER SIGN STRUCTURE
QUADRI–CHORD ARM
PLAN AND ELEVATION
SEPTEMBER 2009 (Revised 11/23/09)

DRAWING NO. 01

JOHN C. MAUSER REGISTERED No. 17361 STATE OF INDIANA PROFESSIONAL ENGINEER

John C. Mauser 11/23/09
DESIGN ENGINEER DATE

DESIGNED: JCM DRAWN: MBW

PLAN

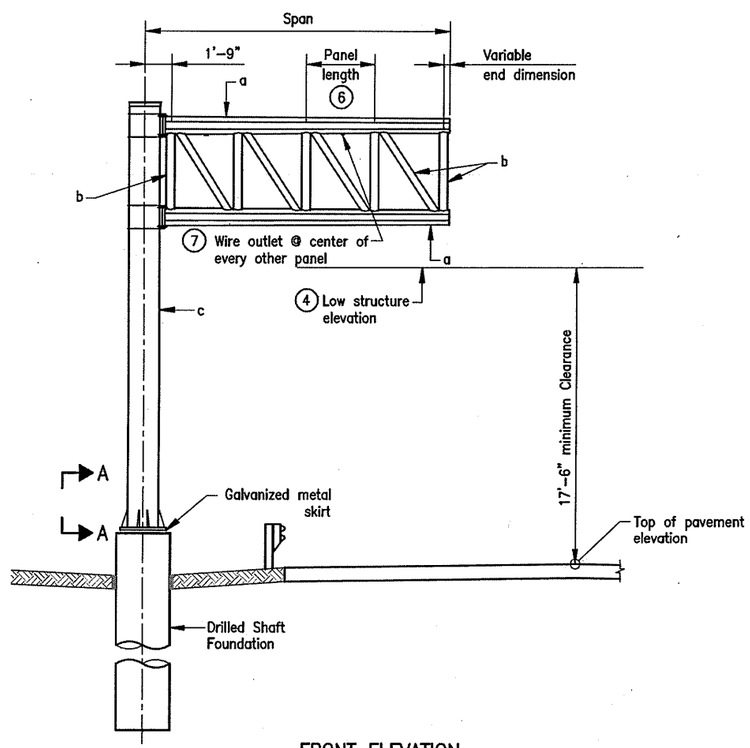

FRONT ELEVATION

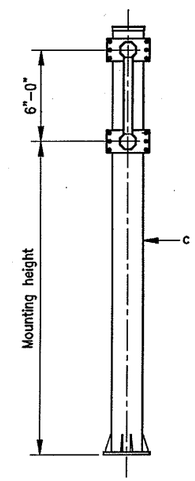

SIDE ELEVATION

NOTES:

1 See Drawing 03 for dimensions and member sizes.

2 Maximum deviation of any chord from a straight line shall be 1/8".

3 See Drawings 04 and 07 for double mast arm details.

4 See Standard Drawing E 802-SNWW-01 through 11 for sign support and placement details.

5 All cantilever structure members are steel.

6 Number of panels varies. See Drawing 03 for table of dimensions.

7 See Drawing 06 for wire outlet detail.

LEGEND:

a – Chord members

b – Interior members:
(Verticals and Vertical Diagonals) of double mast arm

c – Column

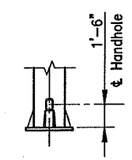

ELEVATION A–A

INDIANA DEPARTMENT OF TRANSPORTATION

CANTILEVER SIGN STRUCTURE
DOUBLE MAST ARM
PLAN AND ELEVATION
SEPTEMBER 2009 (Revised 11/23/09)

DRAWING NO. 02

JOHN C. MAUSER REGISTERED No. 17361 STATE OF INDIANA PROFESSIONAL ENGINEER

John C. Mauser 11/23/09
DESIGN ENGINEER DATE

DESIGNED: JCM DRAWN: MBW

DIMENSIONS FOR CANTILEVER SIGN STRUCTURES

	SPAN (FT)	NO. OF PANELS	PANEL LENGTH (FT- IN)	VARIABLE END DIMENSION (FT-IN)
DOUBLE MAST ARM	10	2	4' - 0"	3"
	11	3	3' - 0"	3"
	12	3	3' - 3"	6"
	13	3	3' - 6"	9"
	14	3	4' - 0"	3"
	15	3	4' - 3"	6"
	16	4	3' - 6"	3"
	17	4	3' - 9"	3"
	18	4	4' - 0"	3"
	19	4	4' - 3"	3"
	20	4	4' - 6"	3"
QUADRI-CHORD ARM	21	5	3' - 9"	6"
	22	5	3' - 9"	1' - 6"
	23	5	4' - 0"	1' - 3"
	24	5	4' - 3"	1' - 0"
	25	5	4' - 6"	9"
	26	6	3' - 9"	1' - 9"
	27	6	4' - 0"	1' - 3"
	28	6	4' - 3"	9"
	29	6	4' - 3"	1' - 9"
	30	6	4' - 6"	1' - 3"
	31	7	4' - 0"	1' - 3"
	32	7	4' - 3"	6"
	33	7	4' - 3"	1' - 6"
	34	7	4' - 6"	9"
	35	7	4' - 6"	1' - 9"

CANTILEVER SIGN STRUCTURE SCHEDULE

STR. TYPE	MAX. SPAN	MAX. SIGN AREA	MAX. MOUNTING HEIGHT	CHORD (a) ⑦		VERT. / HORIZ. / DIAG. (b)		COLUMN (c)	
				DIA.	WALL THK.	DIA.	WALL THK.	DIA.	WALL THK.
	FT.	SQ. FT.	FT.	IN.	IN.	IN.	IN.	IN.	IN.
*A	10	180	24' - 0"	7.625	0.500	4.500	0.337	18.000	0.750
*B	15	280		10.750	0.593	5.563	0.500	20.000	0.812
*C	20	380		14.000	0.593	6.625	0.719	24.000	0.968
D	25	300	24' 0"	5.563	0.258	2.875	0.203	24.000	0.562
E	30			5.563	0.258	2.875	0.203	24.000	0.562
F	35			5.563	0.375	2.875	0.276	24.000	0.688
G	25	400	24' 0"	5.563	0.375	2.875	0.276	24.000	0.968
H	30			5.563	0.375	2.875	0.276	24.000	0.968
I	35			5.563	0.375	2.875	0.276	24.000	0.968

* Type A, B, C: Double mast arm cantilever structures.
Type D, E, F, G, H, I: Quadri-chord arm cantilever structures.

NOTES:

1. All panels on the quadri-chord and double mast arm structures shall be the same length. The minimum panel length is 3'-0" and the maximum is 4'-6".
2. See Drawing 04 for additional details and required camber.
3. For base plate and anchor bolt details see Drawings 08.
4. See Drawings 11 thru 19 for drilled shaft foundation details.
5. All cantilever structure members are steel.
6. All member diameters shown are outside diameters.
7. ⑦ Double mast arm chord design is based on octagonal tubular shape with 0.14 inches per foot taper. Quadri-chord arm chord design is based on circular shapes with constant diameter.

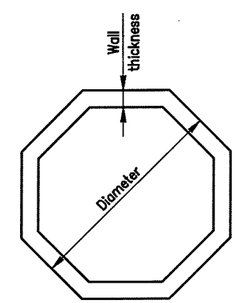

OCTAGON TUBULAR SHAPE

INDIANA DEPARTMENT OF TRANSPORTATION

CANTILEVER SIGN STRUCTURE
TABLE OF DIMENSIONS

SEPTEMBER 2009 (Revised 11/23/09)

DRAWING NO. 03

JOHN C. MAUSER REGISTERED No. 17361 STATE OF INDIANA PROFESSIONAL ENGINEER

John C. Mauser 11/23/09
DESIGN ENGINEER DATE

DESIGNED: JCM DRAWN: REM

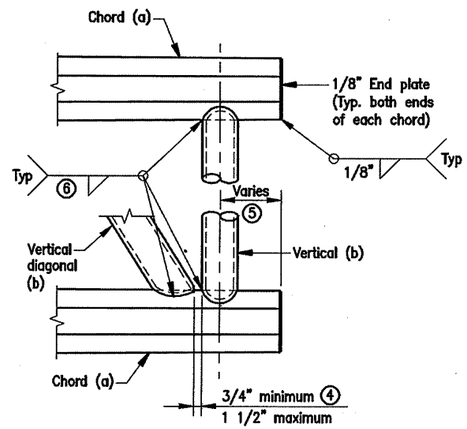

ELEVATION DETAIL A

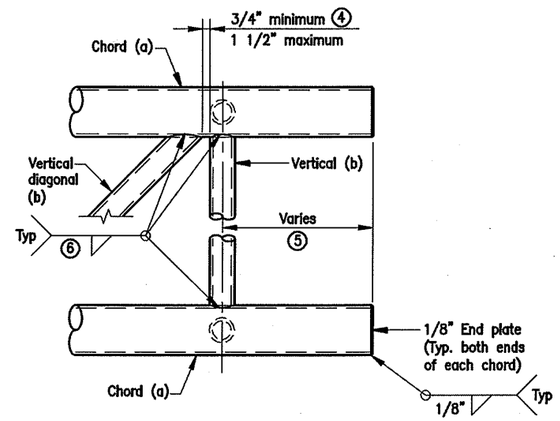

ELEVATION DETAIL B

NOTES:

1. Number of panels varies. See Drawing 03 for table of dimensions.
2. See Drawing 04 thru 06 for quadri-chord arm connection details.
3. See Drawing 03 for schedule of cantilever structure members.
4. Vertical diagonals shall be detailed for minimum offset from the panel point based on the following: Offset shall be such as to provide a 3/4" minimum to 1 1/2" maximum clearance between any diagonal and any vertical member, and to provide clearance for u-bolt connections of signs or walkway brackets.
5. For variable end dimension, see table on Drawing 03.
6. Weld size for: Quadri-Chord Arm = 1/4"

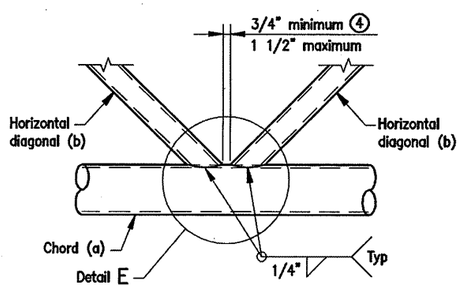

PLAN (CHORD) DETAIL C
TYPICAL PANEL CONNECTION

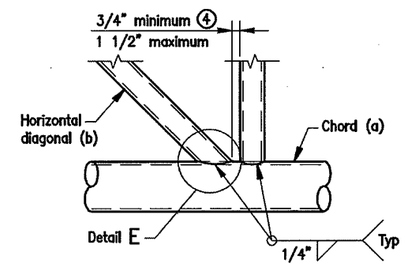

PLAN (CHORD) DETAIL D
TYPICAL PANEL CONNECTION

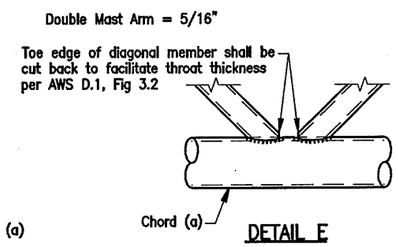

DETAIL E

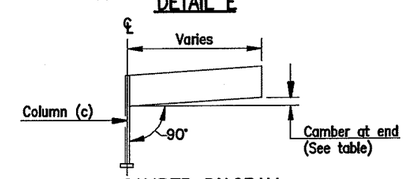

CAMBER DIAGRAM

DOUBLE MAST ARM			QUADRI-CHORD ARM		
TYPE	LENGTH	CAMBER AT END (inches)	TYPE	LENGTH	CAMBER AT END (inches)
A	10'-0"	0.375	D	25'-0"	1.750
B	15'-0"	0.750	E	30'-0"	2.625
C	20-0"	1.000	F	35'-0"	3.500
			G	25'-0"	1.250
			H	30'-0"	2.000
			I	35'-0"	3.000

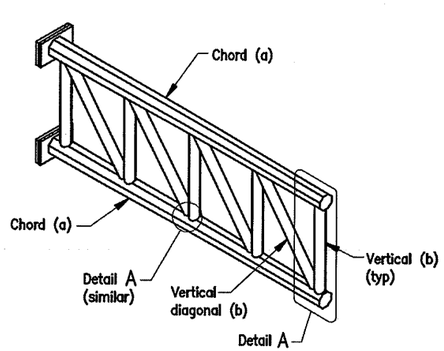

DOUBLE MAST ARM

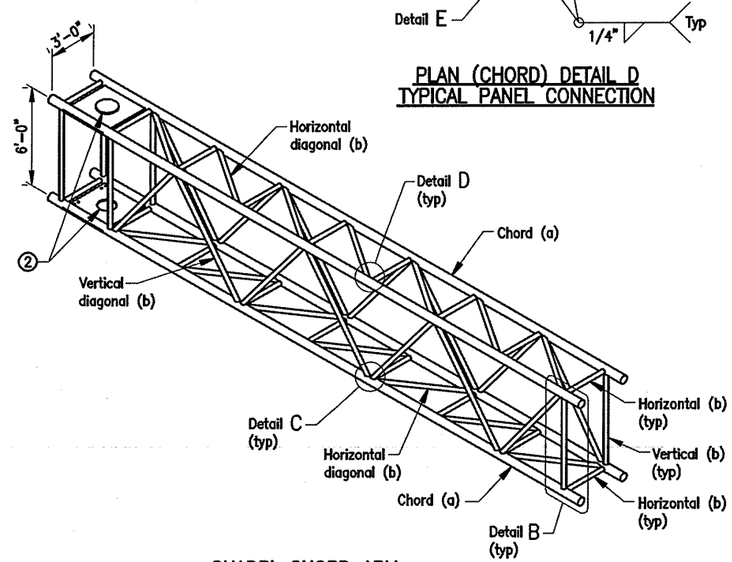

QUADRI-CHORD ARM

INDIANA DEPARTMENT OF TRANSPORTATION

CANTILEVER SIGN STRUCTURE
ARM DETAILS

SEPTEMBER 2009 (Revised 11/23/09)

DRAWING NO. 04

JOHN C. MAUSER REGISTERED No. 17361 STATE OF INDIANA PROFESSIONAL ENGINEER

John C. Mauser 11/23/09
DESIGN ENGINEER DATE

DESIGNED: JCM DRAWN: MDW

NOTES:

1. Connection bolts in collar and bolts at lower chord connection must be high strength with matching locknuts. Connection bolts shall have two stainless steel flat washers each. Bolts, contoured washers, and locknuts shall be galvanized.
2. After galvanizing, Collar inside diameter shall equal outside diameter of galvanized column plus ⅛" (±1/16"). Maximum gap between column and collar at any location shall be ⅛" before tightening bolts.
3. Optional full penetration weld in collar may be made at two locations 180 degrees apart. X-ray or UT 100%.

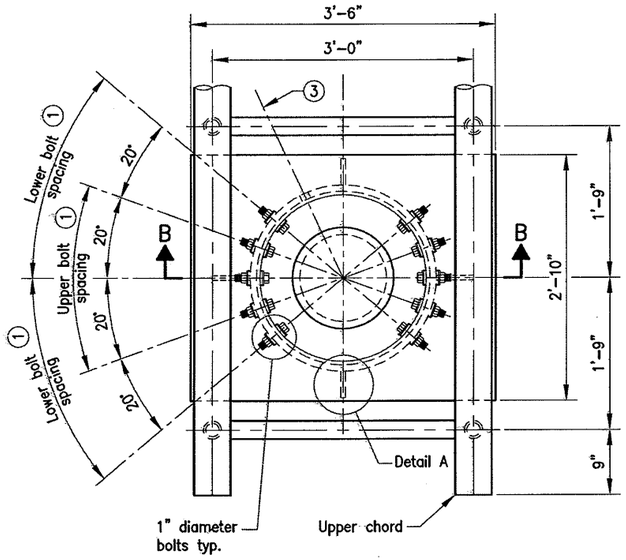

PLAN VIEW – TOP OF COLUMN ABOVE UPPER CHORDS

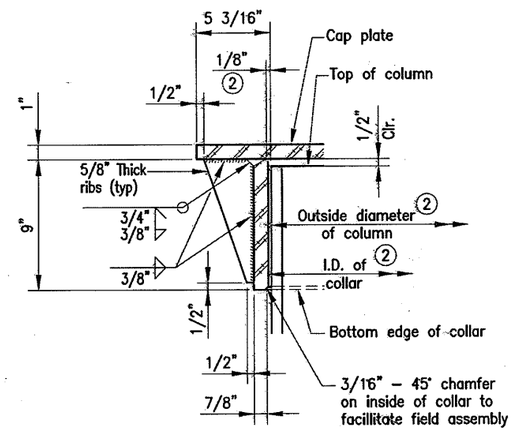

DETAIL A

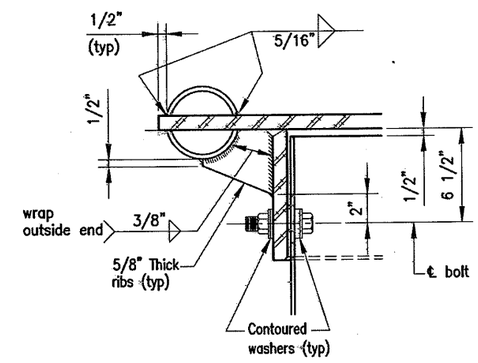

DETAIL B

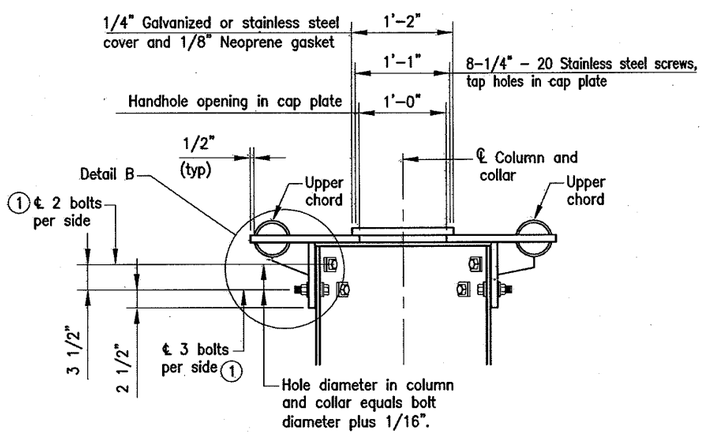

SECTION B–B

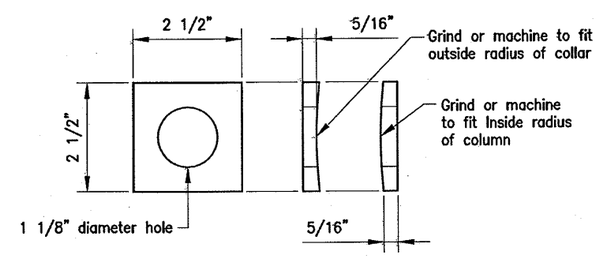

CONTOURED WASHERS

INDIANA DEPARTMENT OF TRANSPORTATION

CANTILEVER SIGN STRUCTURE QUADRI–CHORD DETAILS

SEPTEMBER 2009 (Revised 5/18/10)

DRAWING NO. 05

JOHN C. MAUSER REGISTERED No. 17361 STATE OF INDIANA PROFESSIONAL ENGINEER

John C. Mauser 11/23/09
DESIGN ENGINEER DATE

DESIGNED: JCM DRAWN: REM

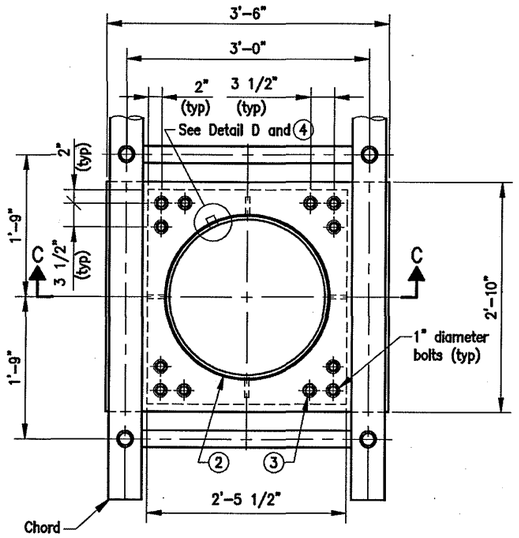

PLAN SECTION–THRU POST ABOVE LOWER CHORDS

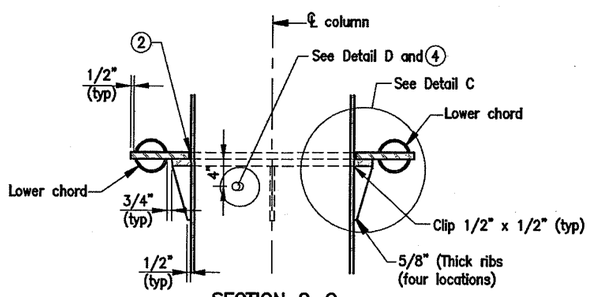

SECTION C–C

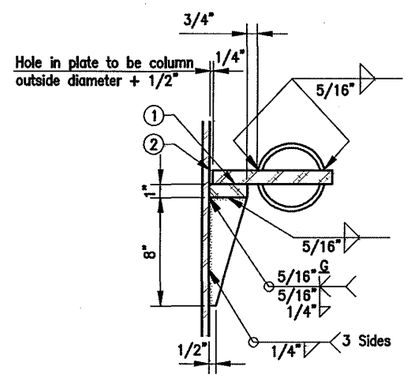

DETAIL C

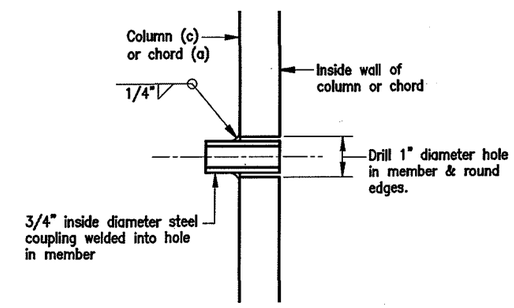

DETAIL D
TYPICAL WIRE OUTLET

NOTES:

1. Grind top if required to fully seat plate. Repair damaged galvanizing before assembly.
2. After tightening lower connection bolts, fill gap with non–hardening, silicone caulk suitable for exterior exposure and acceptable to the engineer. Cost is included in cantilever sign structure.
3. Connection bolts in collar and bolts at lower chord connection must be high strength with matching locknuts. Connection bolts shall have two stainless steel flat washers each. Bolts, contoured washers, and locknuts shall be galvanized.
4. Orient pipe toward sign. Hole in column equals outside diameter pipe + 1/8".

INDIANA DEPARTMENT OF TRANSPORTATION

CANTILEVER SIGN STRUCTURE
QUADRI–CHORD DETAILS

SEPTEMBER 2009 (Revised 11/23/09)

DRAWING NO. 06

JOHN C. MAUSER REGISTERED No. 17361 STATE OF INDIANA PROFESSIONAL ENGINEER

John C. Mauser 11/23/09
DESIGN ENGINEER DATE

DESIGNED: JCM DRAWN: REM

COLUMN DIAMETER (IN.)	CHORD DIAMETER (IN.)	W (FT.–IN.)	H (FT.–IN.)	A (FT.–IN.)	B (FT.–IN.)
18"	7 ⅝"	2'–3"	1'–2"	1'–10 1/2"	9 1/2"
20"	10 ¾"	2'–5"	1'–5"	2'–0 1/2"	1'–0 1/2"
24"	1'–2"	2'–9"	1'–6"	2'–4 1/2"	1'–1 1/2"

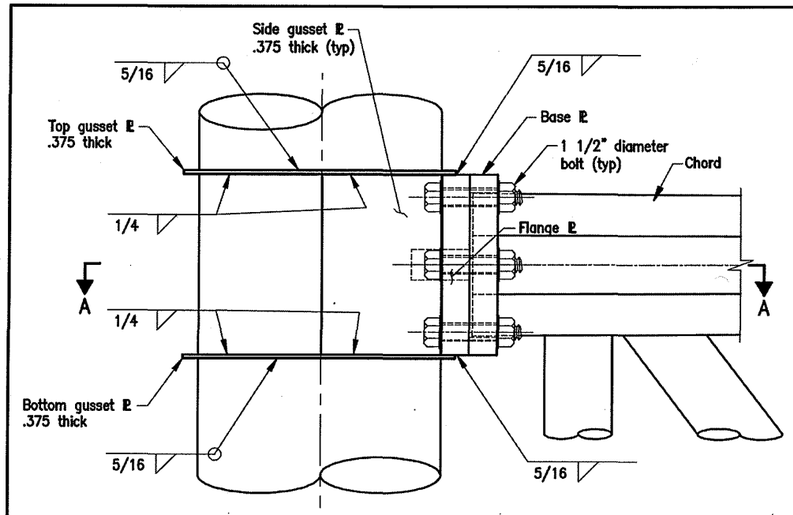

DOUBLE MAST ARM TRUSS CONNECTION DETAIL
ELEVATION

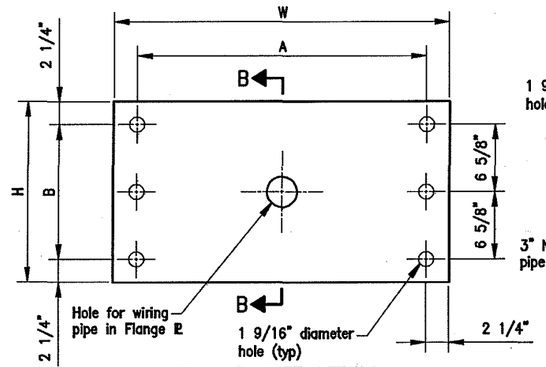

FLANGE PLATE DETAILS

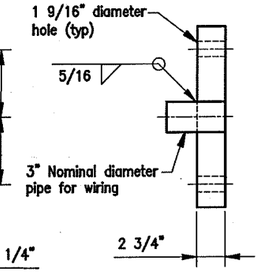

SECTION B–B

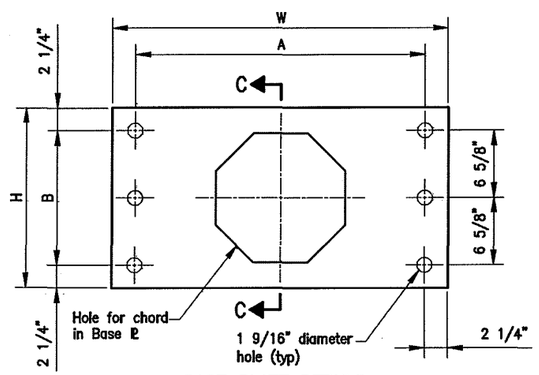

BASE PLATE DETAILS

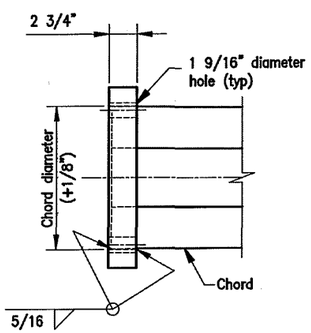

SECTION C–C

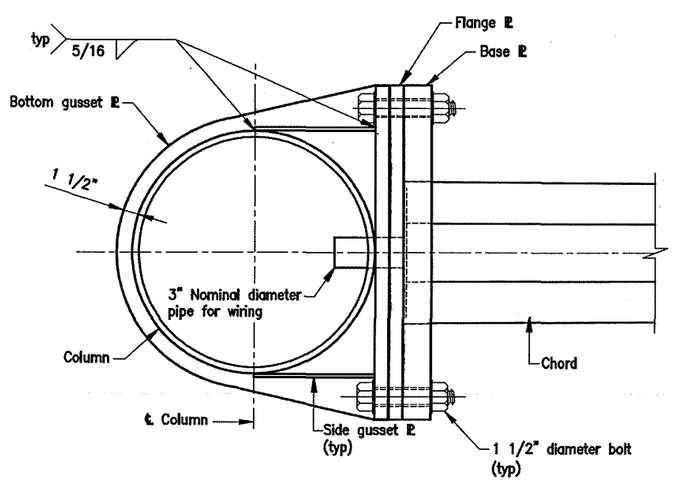

SECTION A–A

INDIANA DEPARTMENT OF TRANSPORTATION

CANTILEVER SIGN STRUCTURE
MAST ARM DETAILS

SEPTEMBER 2009 (Revised 11/23/09)

DRAWING NO. 07

JOHN C. MAUSER REGISTERED No. 17361 STATE OF INDIANA PROFESSIONAL ENGINEER

John C. Mauser 11/23/09
DESIGN ENGINEER DATE

DESIGNED: JCM DRAWN: REM

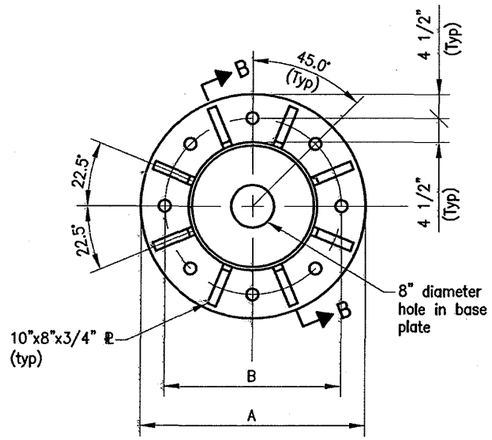

SECTION A–A

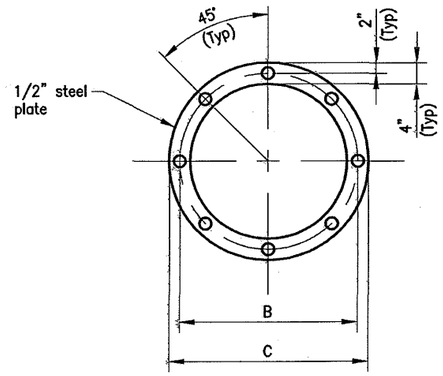

ANCHOR AND POSITIONING PLATE

COLUMN DIAMETER	A (FT–IN)	B (FT–IN)	C (FT–IN)
18	3'–0"	2'–3"	2'–7"
20	3'–2"	2'–5"	2'–9"
24	3'–6"	2'–9"	3'–1"

NOTES:

1. Utilize temporary positioning plate and leveling nuts or other engineer approved methods to maintain anchor bolt alignment during concrete placement. Positioning plate and associated nuts shall be removed upon completion of the foundation.
2. Protect threads during concreting with tape, sleeves, or other means.

(3) 1'–6" is minimum to be galvanized. entire bolt may be galvanized at contractor's option.

(4) Provide uncoated nut at bottom of anchor plate. Deform thread or use chemical thread lock to secure.

(5) Use 1/4" x 1" minimum continuous backer ring. Tack weld only in root area of final weld.

(6) Anchor bolt nuts shall be tightened against the base plate by turning the nut 1/6 turn (minimum) from snug tight condition.

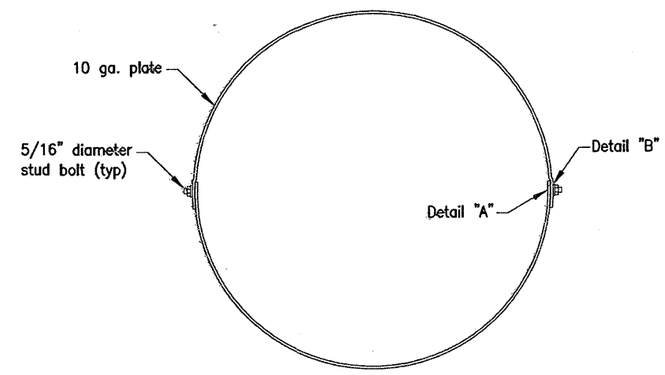

SKIRT DETAIL

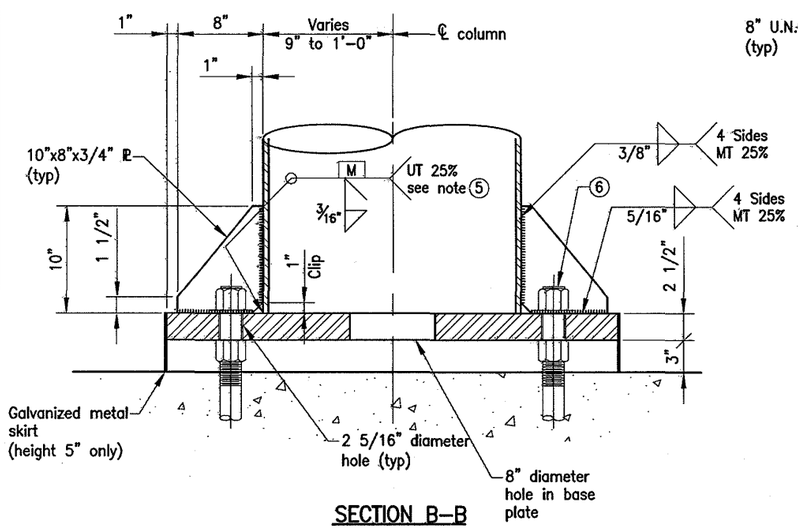

SECTION B–B

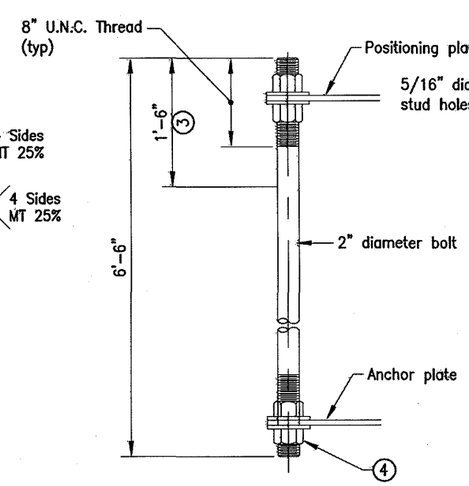

ANCHOR BOLT DETAIL

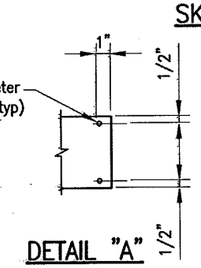

DETAIL "A"

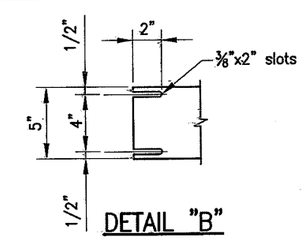

DETAIL "B"

INDIANA DEPARTMENT OF TRANSPORTATION

CANTILEVER SIGN STRUCTURE
BASE PLATE AND ANCHOR BOLT DETAILS

SEPTEMBER 2009 (Revised 5/18/10)

DRAWING NO. 08

JOHN C. MAUSER REGISTERED No. 17361 STATE OF INDIANA PROFESSIONAL ENGINEER

John C. Mauser 11/23/09
DESIGN ENGINEER DATE

DESIGNED: JCM DRAWN: MBW

NOTES:

1. In lieu of fabricated handhole frame as shown, frame may be cut from 2" plate (rolling direction vertical).
2. See Standard Drawing E802-SNWR-03 for grounding post details. Grounding post to be placed on far side of support directly opposite center of handhole.
3. See Drawings 01 and 02 for handhole locations.

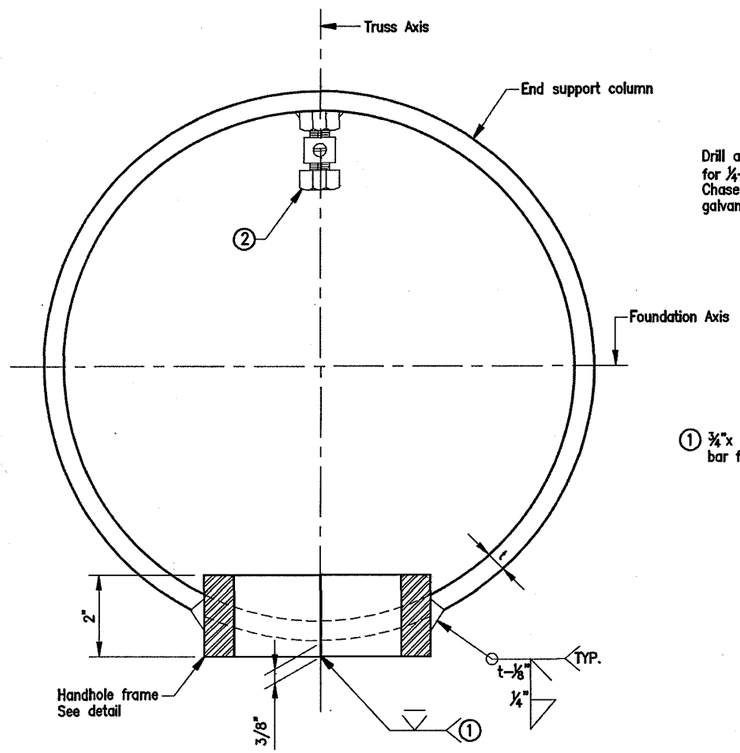

PLAN

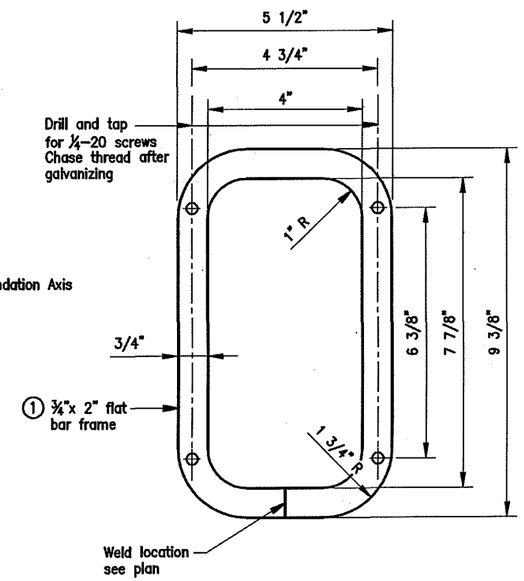

HANDHOLE FRAME DETAIL

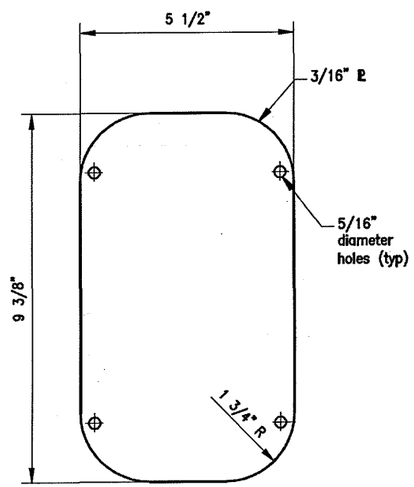

HANDHOLE COVER

INDIANA DEPARTMENT OF TRANSPORTATION

CANTILEVER SIGN STRUCTURE
HANDHOLE DETAILS

SEPTEMBER 2009 (Revised 11/23/09)

DRAWING NO. 09

JOHN C. MAUSER REGISTERED No. 17361 STATE OF INDIANA PROFESSIONAL ENGINEER

John C. Mauser 11/23/09
DESIGN ENGINEER DATE

DESIGNED: JCM DRAWN: MEW

NOTES:

1. Type A J–hook shall consist of two 1/4 inch to 3/8 inch stainless steel bars, constructed as shown in detail and spot welded to inside of the end support members.
2. Type B J–hook shall consist of one 1/4 inch to 3/8 inch stainless steel bar shaped as shown in detail, threaded on straight end and fastened to inside by means of a hex nut spot welded to the end support members.
3. Cap bolts that are used to attach top cap of end support columns shall be located to miss J–hook. J–hook Type A or Type B may be used.

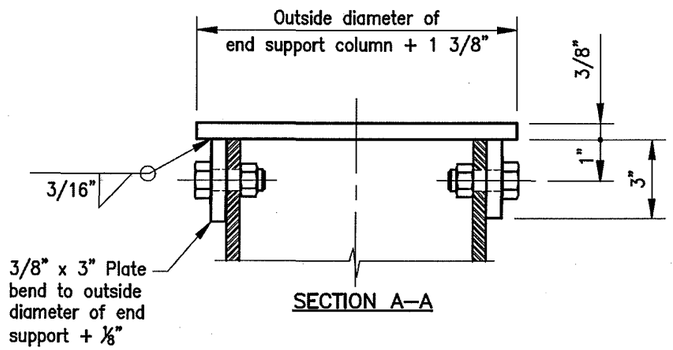

SECTION A–A

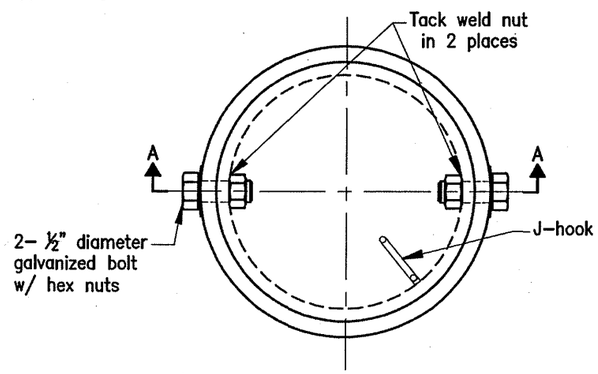

PLAN
TOP CAP – STEEL END SUPPORTS

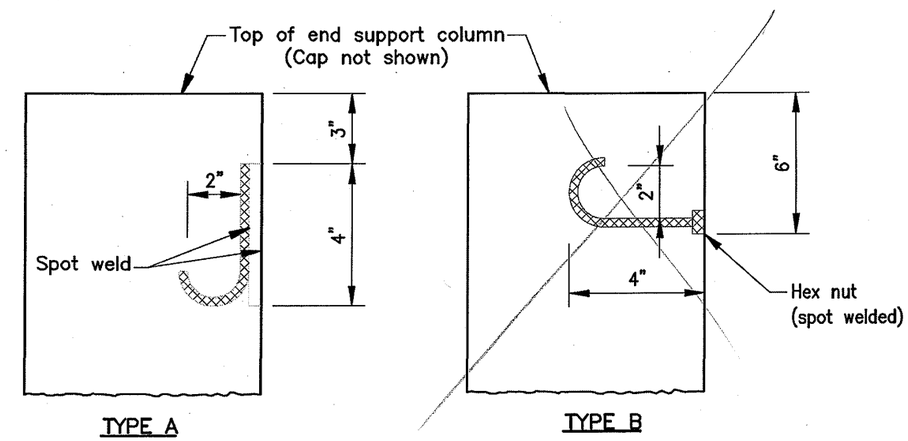

TYPE A

TYPE B

CABLE J HOOKS

INDIANA DEPARTMENT OF TRANSPORTATION	
CANTILEVER SIGN STRUCTURE COLUMN DETAILS	
SEPTEMBER 2009 (Revised 11/23/09)	
DRAWING NO.	10
JOHN C. MAUSER REGISTERED No. 17361 STATE OF INDIANA PROFESSIONAL ENGINEER	John C. Mauser 11/23/09 DESIGN ENGINEER DATE
DESIGNED: JCM	DRAWN: MBW

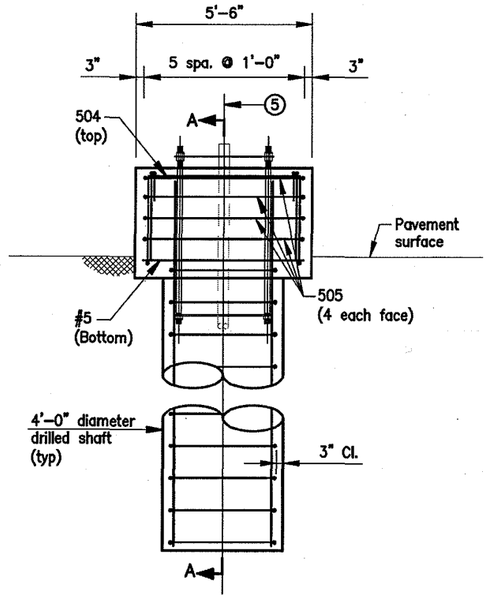

ELEVATION

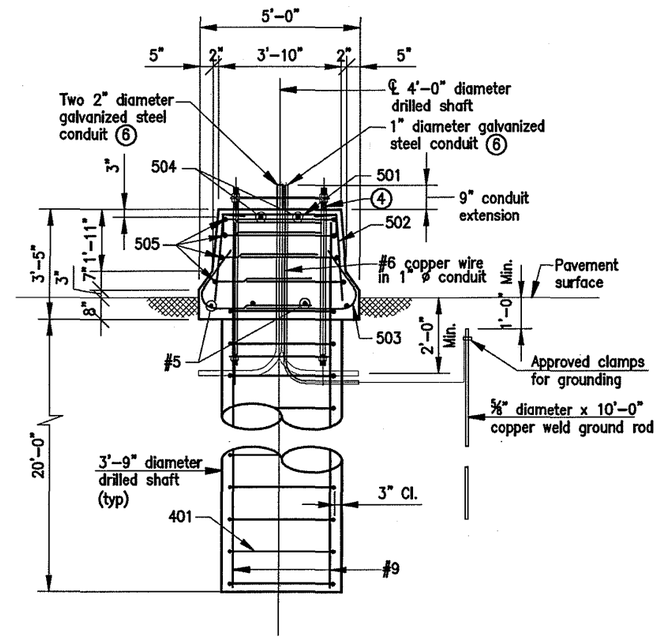

SECTION A-A

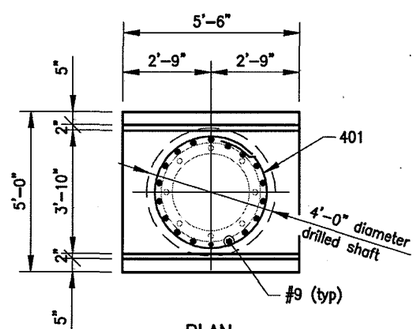

PLAN

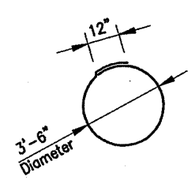

401 X 12'-0"

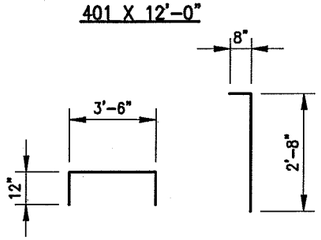

501 X 5'-6" 502 X 3'-4"

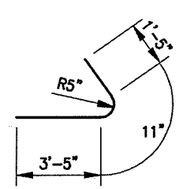

503 X 5'-9"

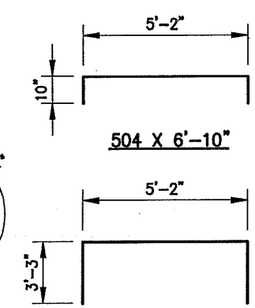

504 X 6'-10" 505 X 11'-8"

Notes:

1. This standard foundation design is applicable for Cantilever Sign Structures Type A and B.
2. The design is based on clay soil with minimum unconfined shear strength of 750 psf or sand soil with minimum friction angle of 30'.
3. For barrier wall width transition see Standard Drawing E 602-CCMB-03.

4 For anchor bolts see Drawing 08.

5 ℄ of column

6 Thread and cap both ends of steel conduit.

7. Surface seal top and sides of barrier railing to the pavement surface.
8. All reinforcement to be epoxy coated.

BILL OF MATERIALS
EPOXY COATED REINFORCING

SIZE & MARK	NO. OF BARS	LENGTH (FT. & IN.)	WEIGHT (LBS.)
401	21	12 ' - 0 "	
TOTAL #4			168
#5	4	5 ' - 2 "	
501	6	5 ' - 6 "	
502	6	3 ' - 4 "	
503	12	5 ' - 9 "	
504	2	6 ' - 10 "	
505	8	11 ' - 8 "	
TOTAL #5			260
#9	18	23 ' - 0 "	
TOTAL #9			1408
TOTAL EPOXY COATED REINFORCING			1836
CONCRETE			
CONCRETE, CLASS "A" (CYS)			12.3
MISCELLANEOUS			
SURFACE SEAL (SYS)			5.9

INDIANA DEPARTMENT OF TRANSPORTATION

CANTILEVER SIGN STRUCTURE TYPE A & B
FOUNDATION AT 33"
CONCRETE BARRIER WALL

SEPTEMBER 2009 (Revised 11/23/09)

DRAWING NO. 11

JOHN C. MAUSER REGISTERED No. 17361 STATE OF INDIANA PROFESSIONAL ENGINEER

John C. Mauser 11/23/09
DESIGN ENGINEER DATE

DESIGNED: JCM DRAWN: REM

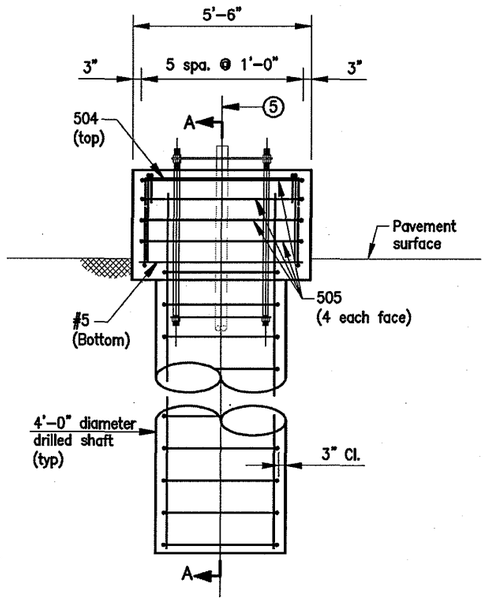

ELEVATION

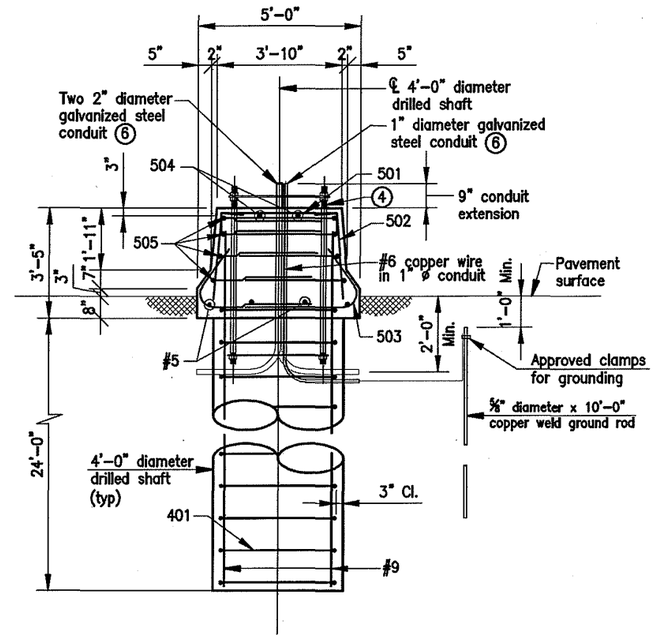

SECTION A–A

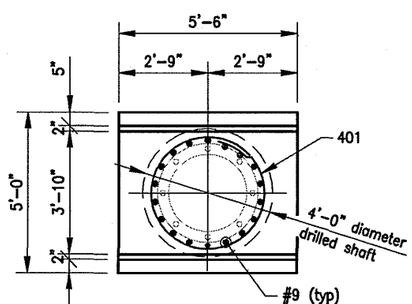

PLAN

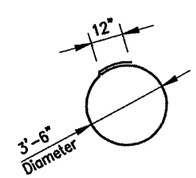

401 X 12'-0"

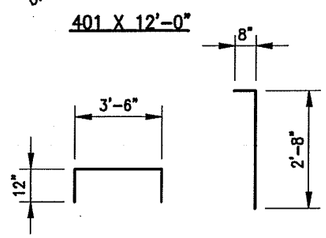

501 X 5'-6" 502 X 3'-4" 503 X 5'-9"

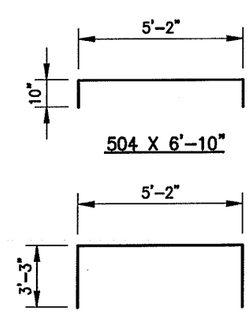

504 X 6'-10" 505 X 11'-8"

Notes:

1. This standard foundation design is applicable for Cantilever Sign Structures Type C, D, E and F.
2. The design is based on clay soil with minimum unconfined shear strength of 750 psf or sand soil with minimum friction angle of 30°.
3. For barrier wall width transition see Standard Drawing E 602–CCMB–03.

④ For anchor bolts see Drawing 08.

⑤ ℄ of column

⑥ Thread and cap both ends of steel conduit.

7. Surface seal top and sides of barrier railing to the pavement surface.
8. All reinforcement to be epoxy coated.

BILL OF MATERIALS
EPOXY COATED REINFORCING

SIZE & MARK	NO. OF BARS	LENGTH (FT. & IN.)	WEIGHT (LBS.)
401	25	12' - 0"	
TOTAL #4			200
#5	4	5' - 2"	
501	6	5' - 6"	
502	6	3' - 4"	
503	12	5' - 9"	
504	2	6' - 10"	
505	8	11' - 8"	
TOTAL #5			260
#9	18	27' - 0"	
TOTAL #9			1652
TOTAL EPOXY COATED REINFORCING			2112
CONCRETE			
CONCRETE, CLASS "A" (CYS)			14.2
MISCELLANEOUS			
SURFACE SEAL (SYS)			5.9

INDIANA DEPARTMENT OF TRANSPORTATION

CANTILEVER SIGN STRUCTURE TYPE C, D, E & F
FOUNDATION AT 33"
CONCRETE BARRIER WALL

SEPTEMBER 2009 (Revised 11/23/09)

DRAWING NO. 12

JOHN C. MAUSER REGISTERED No. 17361 STATE OF INDIANA PROFESSIONAL ENGINEER

John C. Mauser 11/23/09
DESIGN ENGINEER DATE

DESIGNED: JCM DRAWN: REM

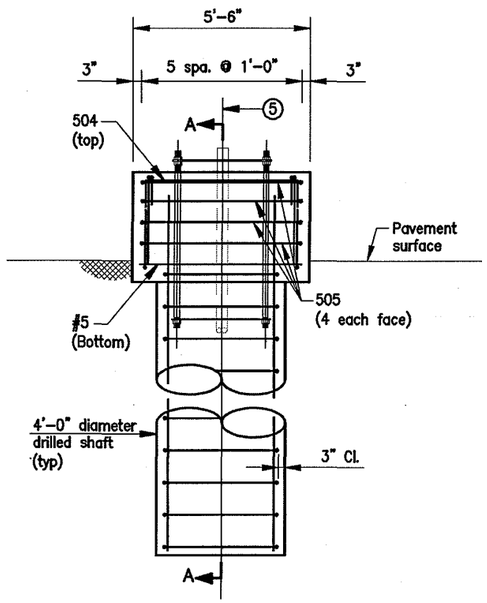

ELEVATION

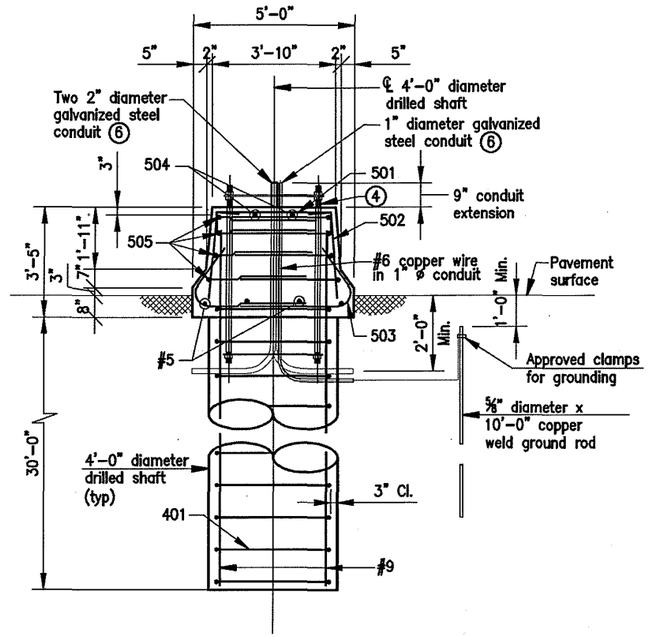

SECTION A–A

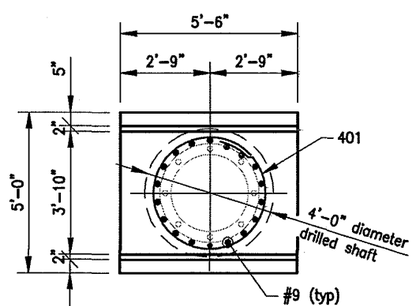

PLAN

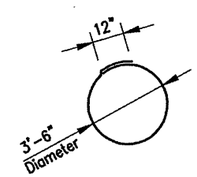

401 X 12'-0"

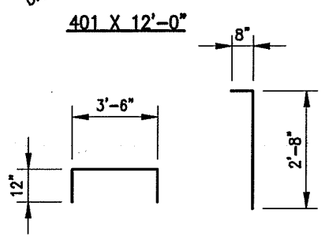

501 X 5'-6" 502 X 3'-4"

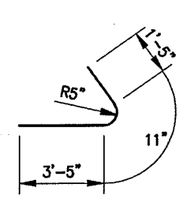

503 X 5'-9"

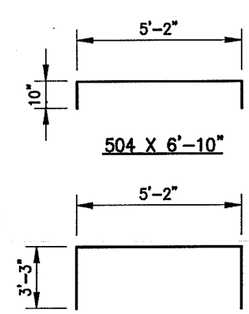

504 X 6'-10" 505 X 11'-8"

Notes:

1. This standard foundation design is applicable for Cantilever Sign Structures Type G, H and I.
2. The design is based on clay soil with minimum unconfined shear strength of 750 psf or sand soil with minimum friction angle of 30°.
3. For barrier wall width transition see Standard Drawing E 602–CCMB–03.

4 For anchor bolts see Drawing 08.

5 ℄ of column

6 Thread and cap both ends of steel conduit.

7. Surface seal top and sides of barrier railing to the pavement surface.
8. All reinforcement to be epoxy coated.

BILL OF MATERIALS
EPOXY COATED REINFORCING

SIZE & MARK	NO. OF BARS	LENGTH (FT. & IN.)	WEIGHT (LBS.)
401	31	12 ' - 0 "	
TOTAL #4			248
#5	4	5 ' - 2 "	
501	6	5 ' - 6 "	
502	6	3 ' - 4 "	
503	12	5 ' - 9 "	
504	2	6 ' - 10 "	
505	8	11 ' - 8 "	
TOTAL #5			260
#9	18	33 ' - 0 "	
TOTAL #9			2020
TOTAL EPOXY COATED REINFORCING			2528
CONCRETE			
CONCRETE, CLASS "A" (CYS)			17.0
MISCELLANEOUS			
SURFACE SEAL (SYS)			5.9

INDIANA DEPARTMENT OF TRANSPORTATION

CANTILEVER SIGN STRUCTURE TYPE G, H & I
FOUNDATION AT 33"
CONCRETE BARRIER WALL

SEPTEMBER 2009 (Revised 11/23/09)

DRAWING NO. 13

JOHN C. MAUSER REGISTERED No. 17361 STATE OF INDIANA PROFESSIONAL ENGINEER

John C. Mauser 11/23/09
DESIGN ENGINEER DATE

DESIGNED: JCM DRAWN: REM

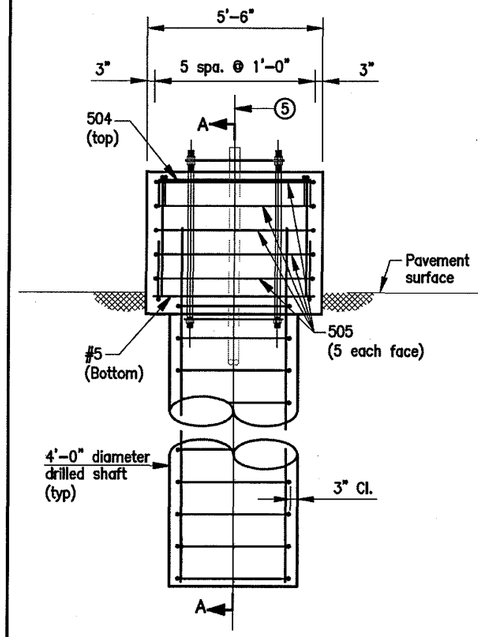

ELEVATION

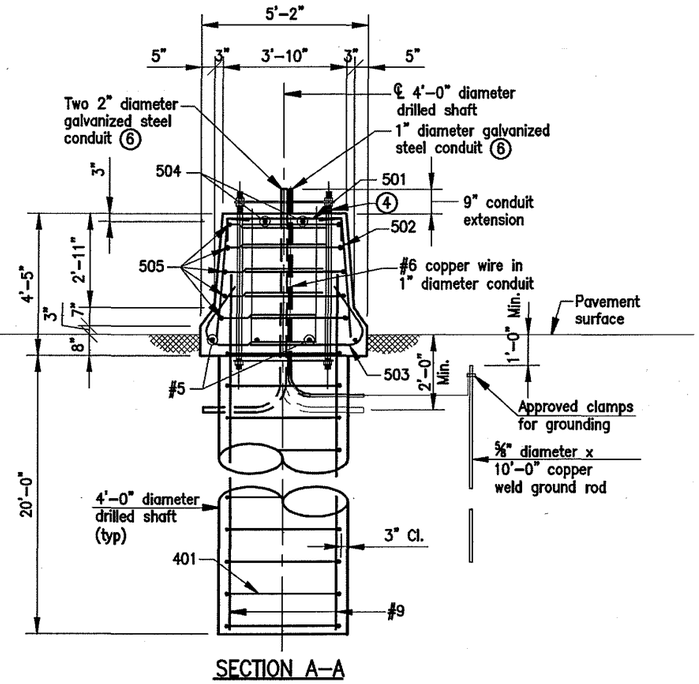

SECTION A-A

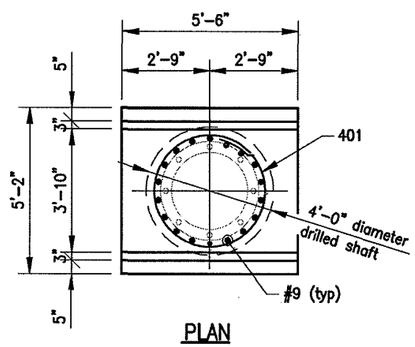

PLAN

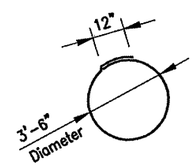

401 X 12'-0"

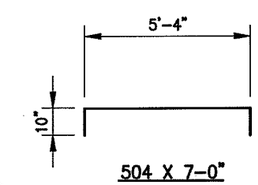

504 X 7-0"

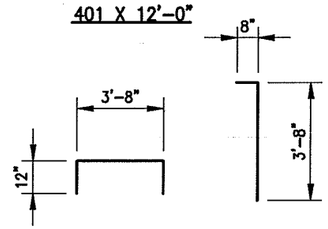

501 X 5'-8" 502 X 4'-4"

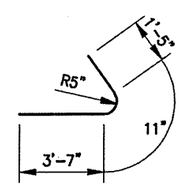

503 X 5'-11"

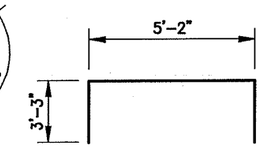

505 X 11'-8"

Notes:

1. This standard foundation design is applicable for Cantilever Sign Structures Type A and B.
2. The design is based on clay soil with minimum unconfined shear strength of 750 psf or sand soil with minimum friction angle of 28°.
3. For barrier wall width transition see Standard Drawing E 602-CCMB-03.

④ For anchor bolts see Drawing E 802-CSTS-08.

⑤ ℄ of column

⑥ Thread and cap both ends of steel conduit.

7. Surface seal top and sides of barrier railing to the pavement surface.
8. All reinforcement to be epoxy coated.

BILL OF MATERIALS
EPOXY COATED REINFORCING

SIZE & MARK	NO. OF BARS	LENGTH (FT. & IN.)	WEIGHT (LBS.)
401	21	12'- 0"	
TOTAL #4			168
#5	4	5'- 2"	
501	6	5'- 8"	
502	6	4'- 4"	
503	12	5'- 11"	
504	2	7'- 0"	
505	10	11'- 8"	
TOTAL #5			295
#9	18	23'- 0"	
TOTAL #9			1408
TOTAL EPOXY COATED REINFORCING			1871
CONCRETE			
CONCRETE, CLASS "A" (CYS)			13.3
MISCELLANEOUS			
SURFACE SEAL (SYS)			7.1

INDIANA DEPARTMENT OF TRANSPORTATION

CANTILEVER SIGN STRUCTURE TYPE A & B
FOUNDATION AT 45°
CONCRETE BARRIER WALL

SEPTEMBER 2009 (Revised 11/23/09)

DRAWING NO. 14

JOHN C. MAUSER REGISTERED No. 17361 STATE OF INDIANA PROFESSIONAL ENGINEER

John C. Mauser 11/23/09
DESIGN ENGINEER DATE

DESIGNED: JCM DRAWN: REM

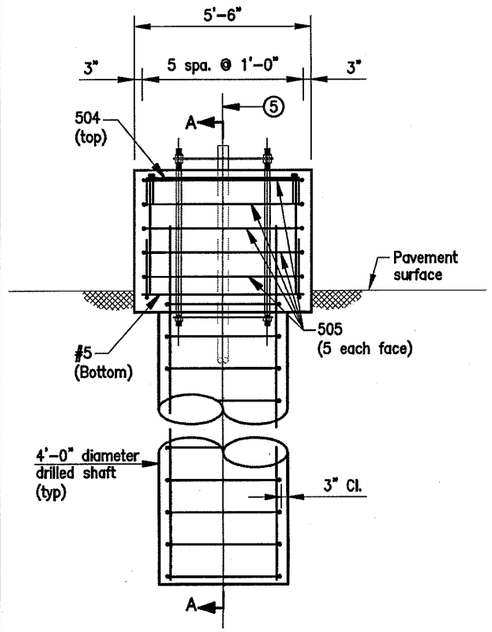

ELEVATION

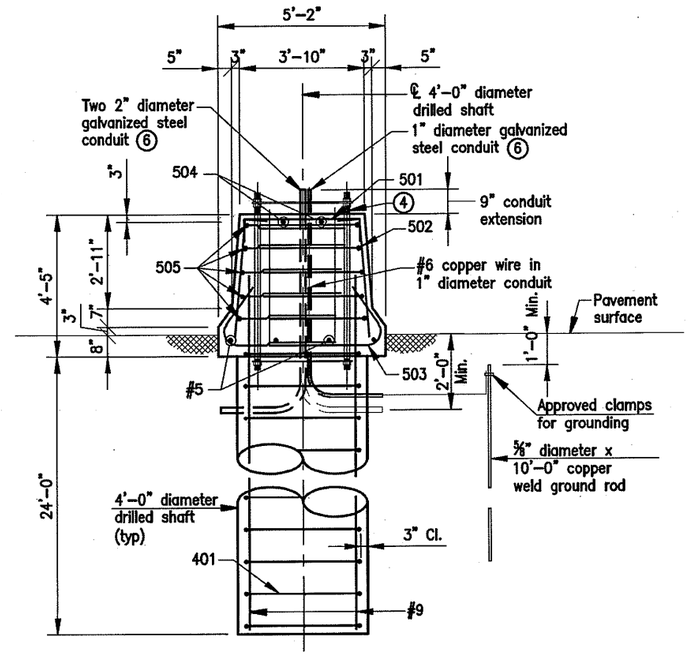

SECTION A–A

Notes:

1. This standard foundation design is applicable for Cantilever Sign Structures Type C, D, E and F.
2. The design is based on clay soil with minimum unconfined shear strength of 750 psf or sand soil with minimum friction angle of 28°.
3. For barrier wall width transition see Standard Drawing E 602–CCMB–03.

4 For anchor bolts see Drawing E 802–CSTS–08.

5 ℄ of column

6 Thread and cap both ends of steel conduit.

7. Surface seal top and sides of barrier railing to the pavement surface.
8. All reinforcement to be epoxy coated.

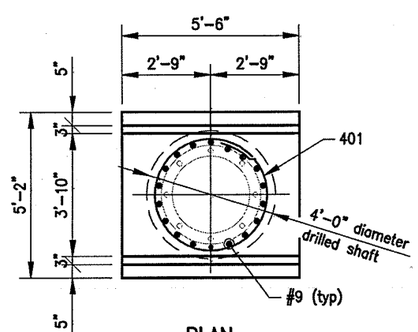

PLAN

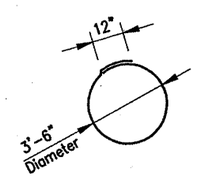

401 X 12'-0"

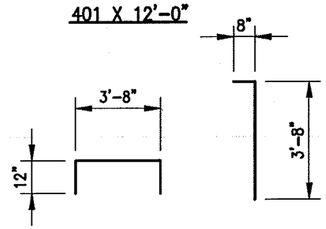

501 X 5'-8" 502 X 4'-4"

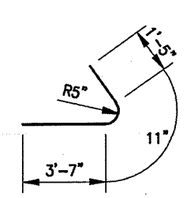

503 X 5'-11"

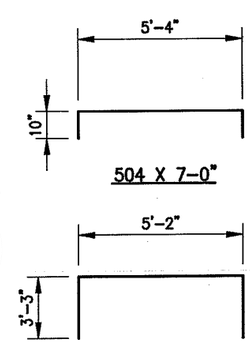

504 X 7'-0" 505 X 11'-8"

BILL OF MATERIALS

EPOXY COATED REINFORCING

SIZE & MARK	NO. OF BARS	LENGTH (FT. & IN.)	WEIGHT (LBS.)
401	25	12 ' - 0 "	
TOTAL #4			200
#5	4	5 ' - 2 "	
501	6	5 ' - 8 "	
502	6	4 ' - 4 "	
503	12	5 ' - 11 "	
504	2	7 ' - 0 "	
505	10	11 ' - 8 "	
TOTAL #5			295
#9	18	27 ' - 0 "	
TOTAL #9			1652
TOTAL EPOXY COATED REINFORCING			2147
CONCRETE			
CONCRETE , CLASS "A" (CYS)			15.1
MISCELLANEOUS			
SURFACE SEAL (SYS)			7.1

INDIANA DEPARTMENT OF TRANSPORTATION

CANTILEVER SIGN STRUCTURE TYPE C, D, E & F
FOUNDATION AT 45°
CONCRETE BARRIER WALL

SEPTEMBER 2009 (Revised 11/23/09)

DRAWING NO. 15

JOHN C. MAUSER REGISTERED No. 17361 STATE OF INDIANA PROFESSIONAL ENGINEER

John C. Mauser 11/23/09
DESIGN ENGINEER DATE

DESIGNED: JCM DRAWN: REM

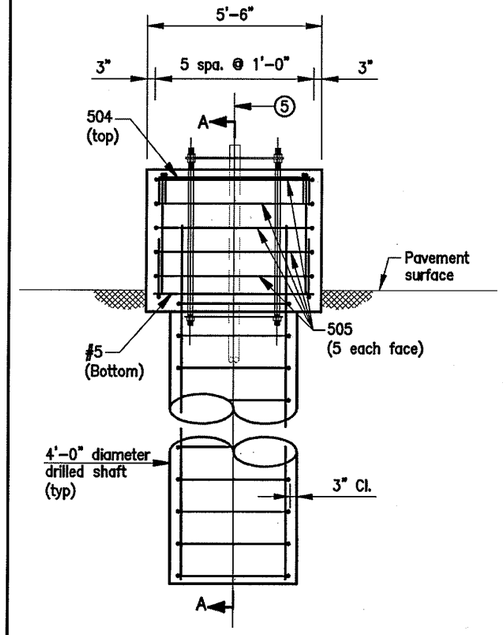

ELEVATION

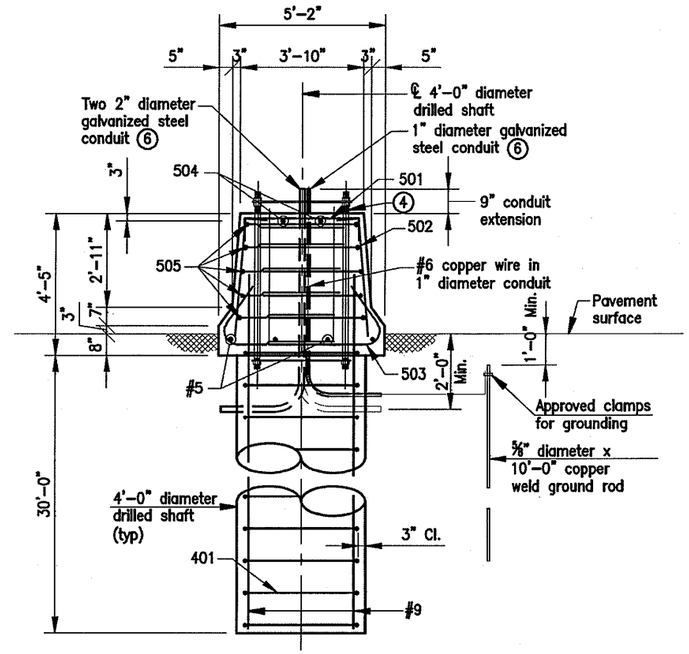

SECTION A–A

Notes:

1. This standard foundation design is applicable for Cantilever Sign Structures Type G, H and I.
2. The design is based on clay soil with minimum unconfined shear strength of 750 psf or sand soil with minimum friction angle of 30°.
3. For barrier wall width transition see Standard Drawing E 602–CCMB–03.

4 For anchor bolts see Drawing 08.

5 ℄ of column

6 Thread and cap both ends of steel conduit.

7. Surface seal top and sides of barrier railing to the pavement surface.
8. All reinforcement to be epoxy coated.

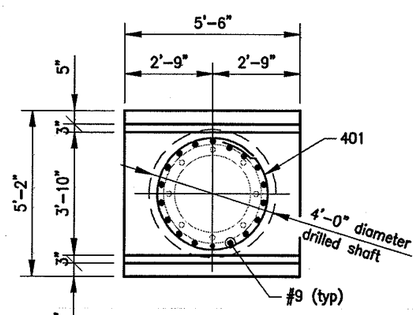

PLAN

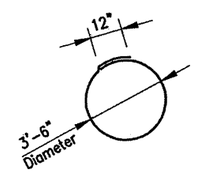

401 X 12'-0"

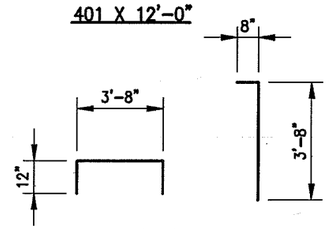

501 X 5'-8" 502 X 4'-4"

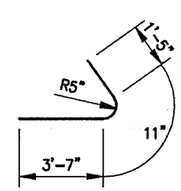

503 X 5'-11"

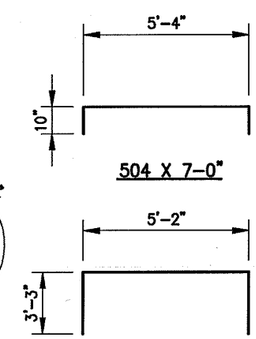

504 X 7–0" 505 X 11'-8"

BILL OF MATERIALS
EPOXY COATED REINFORCING

SIZE & MARK	NO. OF BARS	LENGTH (FT. & IN.)	WEIGHT (LBS.)
401	31	12 ' - 0 "	
TOTAL #4			248
#5	4	5 ' - 2 "	
501	6	5 ' - 8 "	
502	6	4 ' - 4 "	
503	12	5 ' - 11 "	
504	2	7 ' - 0 "	
505	10	11 ' - 8 "	
TOTAL #5			295
#9	18	33 ' - 0 "	
TOTAL #9			2020
TOTAL EPOXY COATED REINFORCING			2563
CONCRETE			
CONCRETE, CLASS "A" (CYS)			17.9
MISCELLANEOUS			
SURFACE SEAL (SYS)			7.1

INDIANA DEPARTMENT OF TRANSPORTATION

CANTILEVER SIGN STRUCTURE TYPE G, H & I
FOUNDATION AT 45°
CONCRETE BARRIER WALL
SEPTEMBER 2009 (Revised 11/23/09)

DRAWING NO. 16

JOHN C. MAUSER REGISTERED No. 17361 STATE OF INDIANA PROFESSIONAL ENGINEER

John C. Mauser 11/23/09
DESIGN ENGINEER DATE

DESIGNED: JCM DRAWN: REM

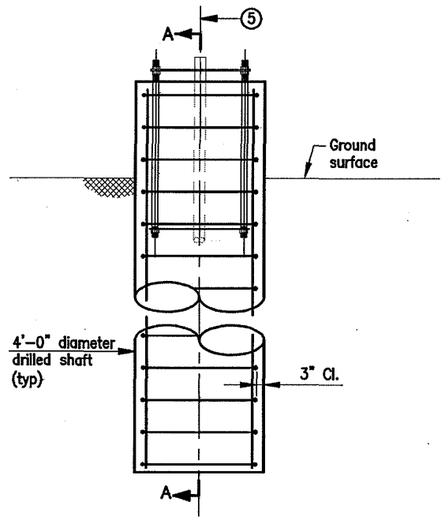

ELEVATION

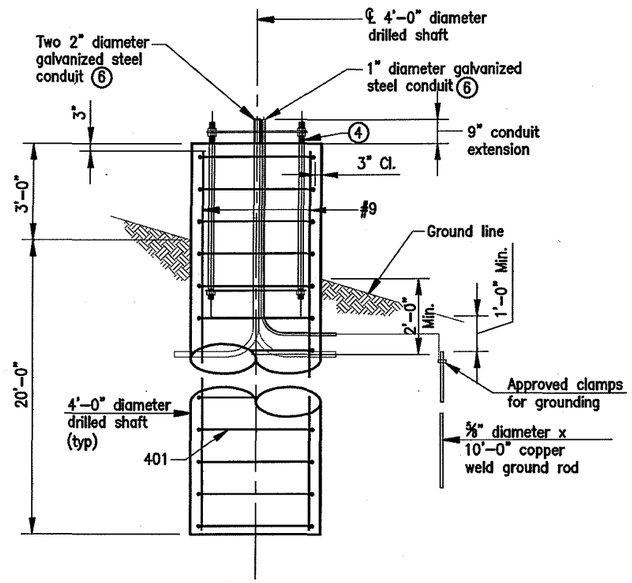

SECTION A–A

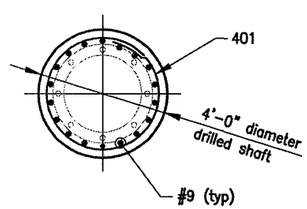

PLAN

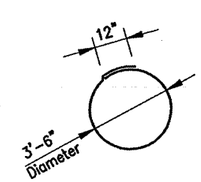

401 X 12'-0"

Notes:

1. This standard foundation design is applicable for Cantilever Sign Structures Type A and B.
2. The design is based on clay soil with minimum unconfined shear strength of 750 psf or sand soil with minimum friction angle of 30°.
3. All reinforcement to be epoxy coated.

4 For anchor bolts see Drawing 08.

5 ℄ of column

6 Thread and cap both ends of steel conduit.

7. Surface seal top and sides of drilled shaft to the ground surface.

BILL OF MATERIALS EPOXY COATED REINFORCING			
SIZE & MARK	NO. OF BARS	LENGTH (FT. & IN.)	WEIGHT (LBS.)
401	24	12 '- 0 "	
TOTAL #4			192
#9	18	22 '- 9 "	
TOTAL #9			1392
TOTAL EPOXY COATED REINFORCING			1584
CONCRETE			
CONCRETE, CLASS "A" (CYS)			10.7
MISCELLANEOUS			
SURFACE SEAL (SYS)			4.3

INDIANA DEPARTMENT OF TRANSPORTATION

CANTILEVER SIGN STRUCTURE TYPE A & B FOUNDATION – DRILLED SHAFT FOUNDATION

SEPTEMBER 2009 (Revised 11/23/09)

DRAWING NO. 17

JOHN C. MAUSER REGISTERED No. 17361 STATE OF INDIANA PROFESSIONAL ENGINEER

John C. Mauser 11/23/09
DESIGN ENGINEER DATE

DESIGNED: JCM DRAWN: REM

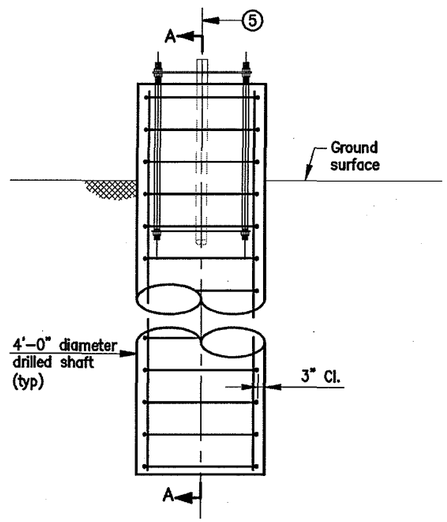

ELEVATION

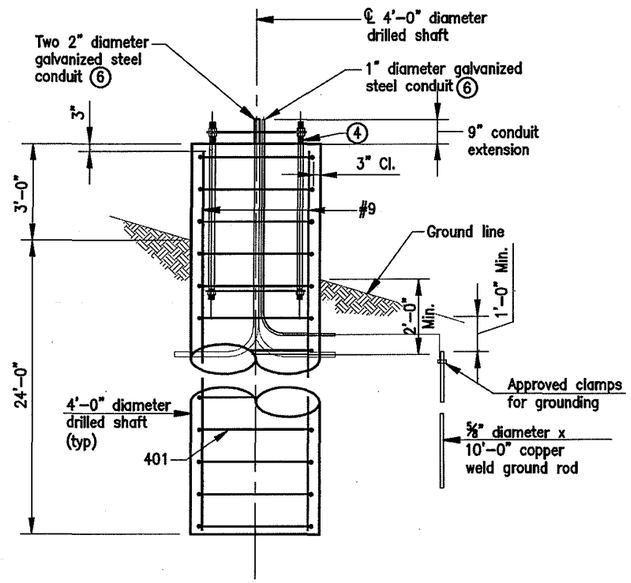

SECTION A-A

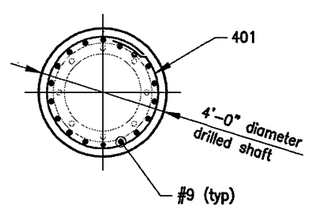

PLAN

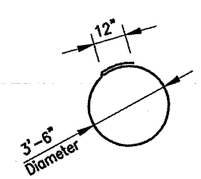

401 X 12'-0"

Notes:

1. This standard foundation design is applicable for Cantilever Sign Structures Type C, D, E and F.
2. The design is based on clay soil with minimum unconfined shear strength of 750 psf or sand soil with minimum friction angle of 30°.
3. All reinforcement to be epoxy coated.

4 For anchor bolts see Drawing 08.

5 ℄ of column

6 Thread and cap both ends of steel conduit.

7. Surface seal top and sides of drilled shaft to the ground surface.

BILL OF MATERIALS EPOXY COATED REINFORCING			
SIZE & MARK	NO. OF BARS	LENGTH (FT. & IN.)	WEIGHT (LBS.)
401	28	12 ' - 0 "	
TOTAL #4			224
#9	18	26 ' - 9 "	
TOTAL #9			1637
TOTAL EPOXY COATED REINFORCING			1861
CONCRETE			
CONCRETE, CLASS "A" (CYS)			12.6
MISCELLANEOUS			
SURFACE SEAL (SYS)			4.3

INDIANA DEPARTMENT OF TRANSPORTATION

CANTILEVER SIGN STRUCTURE TYPE C, D, E & F
FOUNDATION – DRILLED SHAFT FOUNDATION

SEPTEMBER 2009 (Revised 11/23/09)

DRAWING NO. 18

JOHN C. MAUSER REGISTERED No. 17361 STATE OF INDIANA PROFESSIONAL ENGINEER

John C. Mauser 11/23/09/17/18
DESIGN ENGINEER DATE

DESIGNED: JCM DRAWN: REM

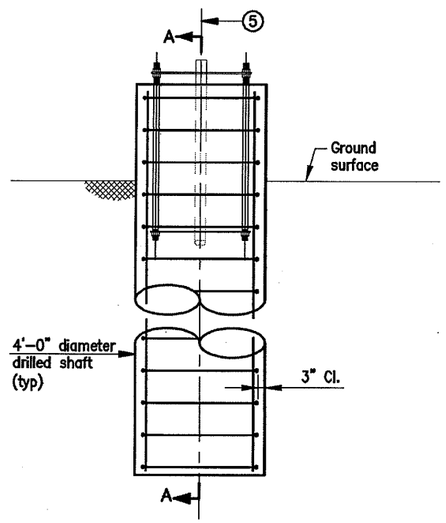

ELEVATION

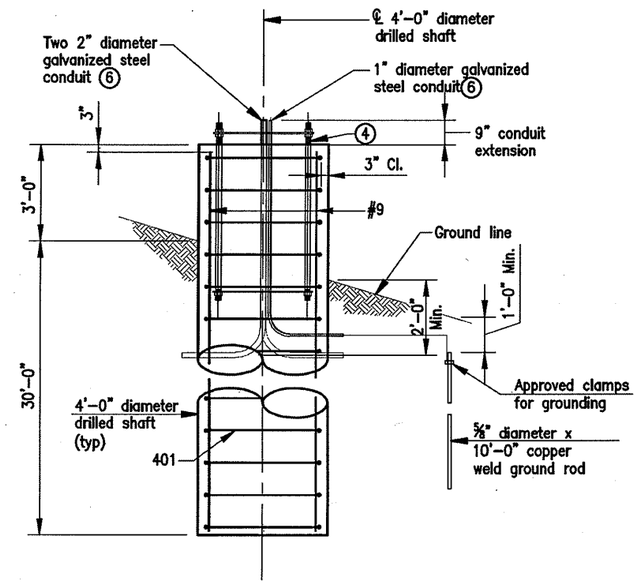

SECTION A–A

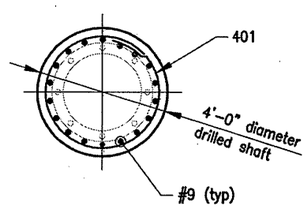

PLAN

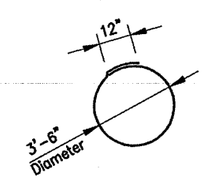

401 X 12'–0"

Notes:

1. This standard foundation design is applicable for Cantilever Sign Structures Type G, H and I.
2. The design is based on clay soil with minimum unconfined shear strength of 750 psf or sand soil with minimum friction angle of 30°.
3. All reinforcement to be epoxy coated.

4 For anchor bolts see Drawing 08.

5 ℄ of column

6 Thread and cap both ends of steel conduit.

7. Surface seal top and sides of drilled shaft to the ground surface.

BILL OF MATERIALS

EPOXY COATED REINFORCING

SIZE & MARK	NO. OF BARS	LENGTH (FT. & IN.)	WEIGHT (LBS.)
401	34	12' - 0"	
TOTAL #4			273
#9	18	32' - 9"	
TOTAL #9			2004
TOTAL EPOXY COATED REINFORCING			2277
CONCRETE			
CONCRETE, CLASS "A" (CYS)			15.4
MISCELLANEOUS			
SURFACE SEAL (SYS)			4.3

INDIANA DEPARTMENT OF TRANSPORTATION

CANTILEVER SIGN STRUCTURE TYPE G, H & I
FOUNDATION – DRILLED SHAFT FOUNDATION

SEPTEMBER 2009 (Revised 11/23/09)

DRAWING NO. 19

JOHN C. MAUSER REGISTERED No. 17361 STATE OF INDIANA PROFESSIONAL ENGINEER

John C. Mauser 11/23/09
DESIGN ENGINEER DATE

DESIGNED: JCM DRAWN: REM

THE EAST END CROSSING

(LOUISVILLE-SOUTHERN INDIANA
OHIO RIVER BRIDGES PROJECT)

PUBLIC-PRIVATE AGREEMENT

BOOK 2
TECHNICAL PROVISIONS

ATTACHMENT 16-1
LSIORBP SECTION 4 TUNNEL GEOTECHNICAL BASELINE REPORT

(This page intentionally blank.)

GEOTECHNICAL BASELINE REPORT

OHIO RIVER BRIDGES PROJECT

LSIORBP SECTION 4
Geotechnical Baseline Report

Submitted To: Mr. Jerry Leslie
H.W. Lochner
1040 Monarch Street
Suite 300
Lexington, KY 40513

Submitted By: Golder Associates Inc.
15851 South US 27, Suite 50
Lansing, MI 48906 USA

STATE OF KENTUCKY
MARK R. FUNKHOUSER
24851
LICENSED
PROFESSIONAL ENGINEER

Mark R Funkhouser
17 AUG 12

Distribution: One Hard Copy
Electronic PDF

August 17, 2012 **Project No. 113-88401 (Phase 3000 DOC0025 Rev 2)**

A world of capabilities delivered locally

Golder Associates

Golder, Golder Associates and the GA globe design are trademarks of Golder Associates Corporation

Table of Contents

1.0 INTRODUCTION 1
1.1 Purpose 1
1.2 Development and Application of GBR 1
1.3 Organization of the GBR 1
1.4 Disclaimer 2
2.0 ANTICIPATED GROUND CONDITIONS 3
2.1 Project 3
2.2 South Portals 3
2.3 North Portals 4
2.4 Northbound and Southbound Tunnels 4
2.4.1 Tunnel Reaches and Lithologies 4
2.4.2 Rock Quality 6
2.4.2.1 Baseline Intact Rock Properties 6
2.4.2.2 Baseline Rock Mass Properties 7
2.4.3 Major Discontinuities 10
2.4.4 Groundwater Conditions 10
2.4.5 In-situ Stresses 10
3.0 POTENTIAL SUBSURFACE HAZARDS AND ADVERSE GEOLOGIC FEATURES 11
3.1 Dissolution Features or Voids 11
3.2 Highly Weathered Zones, Fracture Zones and Zones of Poor Rock Quality 12
3.3 Faults 12
3.4 Groundwater Inflow 12
3.5 Slaking or Expansion of Shale 13
4.0 CONSTRUCTION CONSIDERATIONS 14
4.1 Portal 14
4.1.1 Portal Excavations 14
4.1.2 Portal Excavation Support Systems 14
4.2 Tunnel 15
4.2.1 Method of Tunnel Excavation 15
4.2.1.1 Overview 15
4.2.1.2 Drill-and-Blast Method 15
4.2.1.3 Mechanical Excavators 15
4.2.2 Tunneling Conditions by Reach 16
4.2.2.1 Tunnel Reach 1 16
4.2.2.2 Tunnel Reach 2 17
4.2.2.3 Tunnel Reach 3 18
4.2.2.4 Cross-Passages 18

4.2.3 Initial Ground Support 19
4.2.4 Overbreak 20
5.0 LIMITATIONS 21

List of Tables

Table 1 Baseline Range for Intact Rock Properties
Table 2 Data Summary and Baseline Values of RQD and Fracture Spacing

List of Figures

Figure 1 Site Location Map
Figure 2 Boring Location Map
Figure 3-10 Lithologic Profiles Sheets
Figure 11 GBR Envelope

List of Appendices

Appendix A Glossary

REVISION CONTROL

Rev No.	Date	Description	Prepared by	Reviewed by	Approved by
0	July 6, 2012	Final Geotechnical Baseline Report	Kuantsai Lee	Mark Funkhouser	Darcy Cowan
1	July 30, 2012	Final Geotechnical Baseline Report	Kuantsai Lee	Mark Funkhouser	Darcy Cowan
2	August 17, 2012	Final Geotechnical Baseline Report	Kuantsai Lee	Mark Funkhouser	Darcy Cowan

1.0 INTRODUCTION

1.1 Purpose

The Geotechnical Baseline Report (GBR) establishes a contractual baseline for anticipated ground conditions that will be encountered during construction of the tunnel section of Louisville – Southern Indiana Ohio River Bridges Project Section 4 (the Project). The baseline conditions described in this GBR reflect the IFA's interpretation of anticipated subsurface conditions and ground behavior. It is essential that prospective Developers fully understand the technical concepts, terms, and descriptions used in defining the baseline conditions in this report.

1.2 Development and Application of GBR

The GBR and the baseline conditions presented herein were developed using the geotechnical information and data gathered through geologic explorations, field and laboratory testing and other data; analyses; evaluations; professional opinions; and previous construction experiences in similar ground conditions. The baseline conditions apply and will be measured over the entire length of the tunnels in this Project, provided the tunnel is built within the GBR Envelope as shown in Figure 11

The GBR is neither a design guide nor a specification or recommendation of any particular construction means and methods. The Developer shall not rely on this GBR as the sole input for planning, designing, or performing the work, including selecting and designing the means, methods, equipment, techniques, sequences, and procedures of construction to be used. To fulfill this responsibility, it is advisable that the prospective Developer employs a geotechnical engineer and/or engineering geologist experienced in tunnel design and construction to review this GBR. The Developer will be deemed to have studied the geotechnical data published in the various reports and literature as referenced in this report, inspected the rock cores recovered from the borings, and to have planned and conducted additional investigations and analyses as necessary to gain a complete understanding of the anticipated ground conditions and behavior.

1.3 Organization of the GBR

The GBR is organized into two parts. The first part defines the purpose, application, and limitations of the GBR and includes Section 1 (this section) and Section 5 (Limitations). The second part is the core of the GBR that describes the baseline conditions and includes Sections 2, 3, and 4.

The text of the GBR is supplemented by tables, figures, and an appendix. The tables are presented within the text. The figures and appendix follow the text.

1.4 Disclaimer

The primary sources of data considered in the development of this GBR are the factual information collected primarily by other geotechnical engineers and presented in a number of Geotechnical Data Reports (GDRs). As the GDRs were prepared by different geotechnical engineers who may have followed different practices in describing the conditions of geologic materials and rock masses, it is possible that the same or similar conditions may be described differently by the different geotechnical engineers. Because the descriptions of the rock and rock mass in this GBR are derived from the GDRs, these descriptions may have inherited any inconsistency that may exist among the different GDRs. Any such inconsistency will not be considered or accepted as alternatives to the descriptions and conditions presented in this GBR. The glossary of technical terms presented in Appendix A of this GBR provides the final and definitive reference to the descriptions used in this GBR.

The development of this GBR has relied upon subsurface materials as characterized at specific sample locations from within the boreholes in the GDRs. At the same time, it was recognized that the samples represented only a small fraction of the rock mass affected by the planned construction. Thus, the baseline conditions presented in this GBR encompass and extend the data presented in the GDRs on the basis of professional judgment and other considerations. The GDRs are reference information only and may not be relied upon as baseline information for purposes of this GBR. As such, any difference between the data reported in the GDRs and the baseline conditions presented in this GBR will not be considered or accepted as the basis for changing the baseline conditions.

2.0 ANTICIPATED GROUND CONDITIONS

2.1 Project

The project is located in Louisville, Jefferson County, Kentucky, USA. The project location is shown on Figure 1. The Project layout, with boring locations is shown on Figure 2. Lithologic profiles of the Northbound and Southbound Tunnels are shown on Figure 3 through Figure 6, and Figure 7 through Figure 10 respectively. This GBR is applicable to excavations that fall within the limits shown on Figure 11 (the GBR envelope). As shown in Figure 11, the GBR envelope is defined in reference to the KY841 horizontal and vertical alignment as shown in the Reference Design.

2.2 South Portals

Development of the South Portal will involve excavations down to approximately 90 feet below the ground surface. The excavation is anticipated to be made in the sequence of residual soil, Louisville Limestone, and Waldron Shale with the lowermost few feet in the Laurel Dolomite. The residual soil is expected to range from approximately 5 to 20 feet in thickness and consist of firm to hard, silty clay with traces of sand, iron oxide nodules, remnant rock (gravel to boulder size) and pinnacles of limestone at the top of rock contact. The rock units encountered below the overburden at the South Portal are closely bedded and jointed limestone and shale. Perched groundwater will be encountered at the overburden-limestone contact, located at approximately 5 to 20 feet below the existing ground surface.

The limestone at the South Portal site is completely to highly weathered and extremely weak to weak to a depth of approximately 5 to 10 feet below top of rock surface. Between a depth of about 10 feet and 15 feet, the rocks are moderately to slightly weathered and moderately strong to strong. Below 15 feet, the rock is slightly weathered to fresh and strong to very strong. The South Portal excavation will encounter pinnacled top of rock and karst voids on the face of the cut slope within the limestone. Another perched groundwater zone will be encountered at the base of the limestone – top of shale contact.

The shale near the base of the excavation is weak and intensely to moderately fractured. The shale will crumble and disintegrate when left to dry, and to soften or swell when exposed to free water (slake). The softened or crumbled material will fall out of the slope, creating overhang faces and collapses in the limestone above, as has been observed in highway cuts and quarry walls in the vicinity of the project site. Additional discussion of potential subsurface hazards and adverse geologic features is provided in Section 3.

The lower most few feet or less of the South Portal excavation will be in the Laurel Dolomite, which consists of fresh to slightly weathered, strong to very strong, jointed and bedded, fine grained dolomite.

2.3 North Portals

Development of the North Portal will involve excavations down to about 70 feet below the ground surface. The North Portal is anticipated to be excavated through residual soil, Louisville Limestone, Waldron Shale, and Laurel Dolomite. The residual soil is expected to range from about 5 to 15 feet in thickness and consist of firm to hard, silty clay, with traces of sand, iron oxide nodules, remnant rock (gravel to boulders size pieces) and limestone pinnacles at the top of rock contact. The rock units below the overburden at the North Portal consist of closely bedded and jointed limestone, shale, and dolomite. Perched groundwater will be encountered at the overburden-limestone contact, located at about 5 to 15 feet below the existing ground surface.

The limestone at the North Portal site is completely to highly weathered and extremely weak to weak to a depth of about 2 feet below rock surface. Between a depth of about 2 feet and 10 feet, the rocks are moderately to slightly weathered and moderately strong to strong. Below 10 feet, the rocks are slightly weathered to fresh and strong to very strong. The North Portal excavation will encounter pinnacled top of rock and karst voids on the face of the cut slope within the limestone. A second perched groundwater zone will be encountered at the base of the limestone above the shale contact.

The shale at the base of the limestone is weak and intensely to moderately fractured. The shale will crumble and disintegrate when left to dry, and to soften or swell when exposed to free water (slake). The softened or crumbled material will fall out of the slope, creating overhang faces and collapses in the limestone above, as has been observed in highway cuts and quarry walls in the vicinity of the project site.

The dolomite at the lower part of the excavation is fresh to slightly weathered, strong to very strong, jointed and bedded, fine grained dolomite.

2.4 Northbound and Southbound Tunnels

2.4.1 Tunnel Reaches and Lithologies

The Northbound and the Southbound Tunnels will be excavated within the near horizontal sequence of the Louisville Limestone, the Waldron Shale, and the Laurel Dolomite where, as discussed in Section 2.2 above, the top of the Louisville limestone is pinnacled. The relative positions of the three rock formations within the excavation shift as the elevations of the tunnels drop from south to north. At the south end of the tunnels, the Louisville Limestone will be exposed on the upper excavation (above the springline), the Waldron Shale on the sidewalls, and the Laurel Dolomite on the invert of the excavation. At the north end of the tunnel, the Louisville Limestone no longer intersects the excavation (it is above the crown), the Waldron Shale will be exposed on the crown of the tunnel and the upper part of the roof arch, with the Laurel Dolomite forming the bulk of the excavation. As the Waldron Shale is generally the weakest and

the most heavily jointed of the three formations, its position within the excavation will have a major impact on the stability and the support requirement of the excavation.

In the following discussions and the remainder of this GBR, words rather than numbers are commonly used to describe the location where certain rock formations would appear at certain parts of the excavation (such as springline or crown) in recognition of the uncertainties associated with these locations. Such uncertainties arise from finding the intersection of two near-horizontal wavy lines and from the pinnacled contact at the top of the rock. In addition, these locations will not be known until excavation and may occur in more than one place because of the natural undulation of the contacts between rock formations. Finally, certain geometric features of the tunnel cross section, such as the location of the springline, may change from that envisioned currently as the Developer performs detailed tunnel design. Future changes to the locations of the springline or crown due to any of the reasons discussed above may lead to variations of the tunnel reaches.

Starting from the South Portal and heading north, the Northbound and the Southbound Tunnels have been divided into three reaches by considering (a) the relative positions where the three main rock formations (the Louisville Limestone, the Waldron Shale, and the Laurel Dolomite) are exposed in the tunnel excavation; and (b) the amount of anticipated rock cover above the tunnels. The three reaches are (all stations approximate):

- Reach 1 – from the South Portal at Station 50+30 to approximately Station 55+00. At the beginning of Tunnel Reach 1, the Louisville Limestone is exposed in the arch above the springline. As the reach progresses north, the position of the Waldron Shale rises from the sidewall (between the springline and the invert) to the springline while the Laurel Dolomite follows in step and rises from the invert to the sidewalls.
- Reach 2 – from the end of Reach 1 to approximately Station 61+00. At the beginning of Tunnel Reach 2 or shortly thereafter, the Waldron Shale rises above the springline and becomes exposed in the lower part of the arch. The Laurel Dolomite follows in step and rises from the sidewalls to the springline. The Louisville Limestone, while still exposed in the crown and the upper part of the arch, begins to move above and out of the excavation.
- Reach 3 – from the end of Reach 2 to the North Portal at Station 69+85. 3. At the beginning of Tunnel Reach 3, as the Louisville Limestone continues its transition out of the excavation, the base of the Waldron Shale rises past the mid-height of the tunnel and occupies the bulk of the arch. The transition becomes complete somewhere between Station 61+00 and Station 65+00 where the crown and the upper arch of the excavation are located within the Waldron Shale (the transition could occur over an even longer distance because the contact between the limestone and the shale will not be horizontal or planar and because the projection also depends on the dimensions of the excavation). The Laurel Dolomite, still following in step, will rise and become exposed in the sidewalls and the lower part of the arch. As will be discussed in Section 2.4.2.2 below, the Louisville Limestone in Reach 3 is more closely jointed/bedded than the Louisville Limestone in Reaches 1 and 2.

  While the Louisville Limestone may not be exposed in the crown or the arch of the excavation in some or most parts of Reach 3, it will have a direct and major impact on the

stability of the roof of the excavation since, in places (particularly where the top of the rock is pinnacled), the relatively thin layer of jointed and fractured limestone will not be capable of forming or supporting the ground arch immediately above the excavation. Thus, even though the limestone may not be intentionally exposed for observation during the excavation of Tunnel Reach 3, its presence and potential impacts must be recognized in the planning and the installation of excavation support in this reach. This creates a unique challenge in the excavation and support of Tunnel Reach 3. The challenge will be further explored in Section 4.

As shown on Figure 2, interspersed within the three reaches are cross-passages (#1, #2, #3, and #4) that connect the North- and the Southbound Tunnels:

- Cross-Passage #1 is located near the north end of Reach 1 at approximate stations of 54+00 to 54+30
- Cross-Passage #2 is located within Reach 2 at approximate stations of 57+87 to 58+17
- Cross-Passages #3 and #4 are both located within Reach 3 at approximate stations of 61+75 to 62+05 and 65+62 to 65+92, respectively.

2.4.2 Rock Quality

2.4.2.1 Baseline Intact Rock Properties

Table 1 lists the baseline range for the intact rock properties. The measured minimum and maximum values are also provided in the same table for reference purposes. The baseline range corresponds to the range within which the values of the corresponding properties are expected to fall. As the number of tests for each rock property in each formation is limited (especially so when broken down into different reaches), and as the intra-reach difference in the intact rock property within each formation is statistically insignificant, the baseline range presented in Table 1 apply to all three reaches discussed in Section 2.4.1.

Table 1 Baseline Range for Intact Rock Properties

		Measured		Baseline Range	
		Min	Max	From	To
Uniaxial Compressive Strength, psi	Shale	1,924	19,298	1,800	20,000
	Limestone	1,638	38,829	1,500	40,000
	Dolomite	975	28,640	800	30,000
Point Load Index I_{50}, psi	Shale	24	1,792	20	2,000
	Limestone	130	1,871	20	2,000
	Dolomite	31	1,775	20	2,000
Brazilian Split Tensile Strength, psi	Shale	150	2,635	100	3,000
	Limestone	414	4,413	400	5,000
	Dolomite	651	2,996	600	4,000
Peak Slope Index from Punch Penetration Test	Shale	61	61	60	120
	Limestone	37	168	30	180
	Dolomite	96	165	80	200
CERCHAR Abrasiveness Index	Shale	0.32	0.6	0.25	0.75
	Limestone	0.7	2.5	0.5	2.5
	Dolomite	0.5	1.4	0.5	2.5
Slake Durability Index	Shale	15	99	10	99

2.4.2.2 Baseline Rock Mass Properties

The measured Rock Quality Designation (RQD) indices and fracture frequency for the Louisville Limestone, the Waldron Shale, and the Laurel Dolomite are summarized in Table 2 for each of the three rock formations. Table 2 also presents the corresponding baseline ranges.

Table 2 Data Summary and Baseline Values of RQD and Fracture Spacing

RQD	Formation	No.	Min	Percentile						Max	Baseline Range	
				10%	20%	50%	80%	90%	95%		From	To
Reach 1	Limestone	186	0	85	94	100	100	100	100	100	0	100
	Shale	5	94			99				100		
	Dolomite	13	93	99	100	100	100	100	100	100		
Reach 2	Limestone	131	38	95	97	100	100	100	100	100	0	100
	Shale	83	0	43	73	100	100	100	100	100		
	Dolomite	10	98			100				100		
Reach 3	Limestone	59	18	59	71	90	98	100	100	100	0	100
	Shale	247	0	19	48	93	100	100	100	100		
	Dolomite	86	57	96	98	100	100	100	100	100		
Fracture Spacing, ft	Formation	No.	Min	Percentile						Max	Baseline Range	
				10%	20%	50%	80%	90%	95%		From	To
Reach 1	Limestone	148	0.35	1.21	2.50	7.95	10	10	10	10.2	0.1	10
	Shale	5	2.50			10				10		
	Dolomite	13	1.10	1.48	1.80	5	10	10	10	10		
Reach 2	Limestone	91	0.78	1.98	2.53	6	10	10	10	12	0.1	10
	Shale	51	0.42	1.43	2.50	10	10	10	10	10		
	Dolomite	10	1.46			3.70				10		
Reach 3	Limestone	57	0.17	0.47	0.63	1	1.6667	3.5	5	5	0.1	10
	Shale	161	0.17	0.69	1.00	5	10	10	10	12		

(1) RQD and fracture spacing data shown are from measurements taken immediately following extraction of the core.
(2) Fracture spacing is calculated for each core run by dividing the length of the run by the number of fractures observed in the core run. For those core runs where no fracture was observed, the fracture spacing is conservatively assumed to equal the length of the core run.

The data are divided into the three tunnel reaches (Section 2.4.1) by selecting only the data from those boreholes (or the section of the near-horizontal boreholes) that fall within each tunnel reach. The objective was to compare the distributions of fracture frequency and RQD between different tunnel reaches, although the data were unevenly distributed among the different sources[1]. Despite the uncertainties associated with uneven data distributions discussed above, it appears that the Louisville Limestone is more closely jointed/bedded in Reach 3 than in the other two reaches. This observation is consistent with the expectation that, as the Louisville Limestone in Reach 3 is closer to the ground surface, it is more susceptible to the processes of weathering and degradation and therefore will be more closely jointed/bedded in this reach. For all other cases, the data did not depict noticeable differences among the different reaches.

[1] For example, all limestone data on Reach 3 came from vertical boreholes since the horizontal boreholes did not intercept the Louisville Limestone on that reach. As another example, all dolomite data came from vertical boreholes where the data were concentrated in Reach 3 as the dolomite was located closer to the ground surface in that area.

Engineering rock mass classification using the Rock Mass Rating system (RMR'89), the Norwegian Geotechnical Institute Q system (NGI-Q, and a revised Q system (Q', whereby the joint water factor (J_w) and the stress reduction factor (SRF) are both set to 1 were assessed for the Louisville Limestone, Waldron Shale, and Laurel Dolomite, respectively. The assessment indicated that, among the three systems considered, RMR'89 had the advantage of being relatively simple to apply while capable of reflecting the variation of rock mass conditions along the different tunnel reaches. As such, RMR'89 is selected as the classification system of choice, and the primary quantifier for the purpose of establishing the Tunnel Reach baselines. Also for baseline purposes, the rock mass in each Tunnel Reach is divided into one of three classes; each class occupies a defined range of RMR'89 values.

The primary application of the rock mass classification system is to aid the selection of the initial excavation support system during tunnel design (which may also consider other design methods including numerical models for the selection of initial excavation support system) and construction. Because the excavation will encounter two or three rock formations in all three reaches, the baseline rock mass classes discussed below considered the rock formation(s) that will have the largest impact on the stability of the excavation. In particular, as the rock formation(s) that has the largest impact on the stability of the excavation will likely change in different tunnel sections, the baseline rock mass classes presented below weighed heavily or exclusively on the rock formation(s) that has the greatest impact.

In Tunnel Reach 1, the stability of the excavation is primarily influenced by the character of the Louisville Limestone exposed above the springline. For baseline purposes, 30% of the tunnel length in Reach 1 will have equivalent RMR values of 65 ('fair' to 'good') or higher, another 30% of the tunnel length will have equivalent RMR values of 40 to 65 ('fair'), and the remaining 40% of the tunnel length (which includes the section of the tunnel immediately inside the South Portal) will have equivalent RMR values of 40 ('poor' to 'fair') or less. The last category of 'poor' to 'fair' also cover certain karst features (Section 3.1) and weathered and fractured zones (Section 3.2).

In Tunnel Reach 2, the stability of the excavation will be influenced by both the Louisville Limestone at the crown and the upper arch and the Waldron Shale at the lower arch. The rock mass conditions of the Louisville Limestone is expected to carry a greater weight than the Waldron Shale on the southern sections of the reach, with the weights reversed (the conditions of the Waldron Shale would carry more weight) on the northern sections of the reach. For baseline purposes, 40% of the tunnel length in Reach 2 will have equivalent RMR values of 65 ('fair' to 'good') or higher, another 40% of the tunnel length will have equivalent RMR values of 40 to 65 ('fair'), and the remaining 20% of the tunnel length will have equivalent RMR values of 40 ('poor' to 'fair') or less. The last category of 'poor' to 'fair' also cover certain karst features (Section 3.1) and weathered and fractured zones (Section 3.2).

In Tunnel Reach 3, the stability of the excavation will be influenced by three factors: (a) the rock mass conditions of the Waldron Shale exposed in the crown and the upper arch; (b) the rock mass conditions of the Louisville Limestone that is located (but intentionally unexposed) above the crown; and (c) the shallow ground cover. For baseline purposes, it is assumed that the entire Reach 3 (100%) will have equivalent RMR values of 30 ('poor') or less. Again, the last category of 'poor' also covers certain karst features (Section 3.1) and weathered and fractured zones (Section 3.2). The RMR value of 30 considered for the entire Reach 3 reflects the rock mass conditions of the Louisville Limestone and the Waldron Shale in the roof and the upper arch of the tunnel. It is noted that the majority of the tunnel section and all of the bench excavation in Reach 3 will be located in the Laurel Dolomite with typical RMR values of 70 or higher.

2.4.3 Major Discontinuities

The major rock discontinuities that will be encountered in the tunnel include a system of near-horizontal bedding partings and sub-vertical joints. In general, as discussed in Section 2.4.2.2 above, the bedding partings are well developed. Also, the discontinuities appeared to be more closely spaced in the Louisville Limestone and the Waldron Shale than the underlying Laurel Dolomite. Table 2 presents the baseline fracture spacing.

The discontinuities in the Louisville Limestone and the Waldron Shale vary from smooth, planar to rough and undulating, with varying surface conditions from stained to clay fillings. Apertures range from tight to cavernous. The discontinuities in the Laurel Dolomite vary from irregular, planar to smooth and undulating, with varying surface conditions from stained to clay coated.

Fractured and/or weathered zones have been observed in the boreholes drilled during the geotechnical investigation. Where observed, the fractures and weathered material tend to occur along the major discontinuities discussed above. Fractured and weathered zones are discussed in Section 3.2 below.

2.4.4 Groundwater Conditions

Groundwater levels of locally perched conditions vary greatly across the site and fluctuate between the dry and the wet seasons. The perched water table, where it exists, generally coincided with the soil-rock contact. The hydraulic conductivity of the rock mass is fairly low, on the order of $1x10^{-6}$ cm/s or less, while higher hydraulic conductivity, on the order of $1x10^{-3}$ cm/s or more, will occur along the rock discontinuities and vertical solutioning features. The baseline values of groundwater inflow are provided in Section 3.4.

2.4.5 In-situ Stresses

No in-situ stress measurement has been conducted in the geotechnical investigations for the Tunnel. The baseline value for the ratio of maximum horizontal stress to vertical stress is in the range of 0.5 to 1.0.

3.0 POTENTIAL SUBSURFACE HAZARDS AND ADVERSE GEOLOGIC FEATURES

3.1 Dissolution Features or Voids

The area above the tunnel contains numerous karst features including sinkholes, sinking streams, springs, enlarged joints by solutioning, pinnacled top of rock, and solution channels at the base of the Louisville Limestone just above the limestone shale contact. However, none of the three horizontal holes drilled approximately along the crown of the Northbound Tunnel, the Southbound Tunnel, and the pillar encountered significant vertical dissolution features within the (relatively short) section of the borehole that traversed the Louisville Limestone.

While no vertical dissolution feature greater than a few inches in thickness was encountered in the three horizontal boreholes, it is anticipated that, because of the large excavated area and because a large portion of each horizontal borehole was located in the less solution-prone Waldron Shale, the tunnel excavation will encounter four types of karst features in the Louisville Limestone at and above the contact with the Waldron Shale:

- Minor Dissolution Features: Planar or linear dissolution features with an aperture of 6 inches or less, to be encountered throughout the excavation.
- Dissolution Features: Planar or linear dissolution features with an aperture of 6 inches to 2 feet, to be encountered throughout the excavation.
- Voids: Filled or open, near equi-dimensional karst features with a diameter of 5 feet or less, to be encountered throughout the excavation.
- Cavities: Filled or open, near equi-dimensional karst features with a diameter greater than 5 feet but less than 30 feet, or have a void space of more than 100 cubic yards outside the tunnel excavation envelope and affects the tunnels. For baseline purposes, it is assumed that one (1) such Cavity will be encountered during excavation.

The dimension of aperture discussed above is measured perpendicular to the linear or planar feature at a minimum of 4 locations and averaged. The dimensions of diameter discussed above is measured across the cavity at a minimum of 4 varied orientations and averaged. The four types of karst features are separate and distinct from the solution features for the portal face area discussed in Section 4.1.2; the voids in the portal faces and in the tunnels are characterized and baselined separately.

It is anticipated that the first three types of karst features (Minor Dissolution Features, Dissolution Features, and Voids) will be encountered throughout the excavation where the Louisville Limestone is exposed. The tunnel sections encountering such features will be automatically classified as ‘poor’ to ‘fair’ rock mass in Reaches 1 and 2, and ‘poor’ rock mass in Reach 3.

In Tunnel Reaches 1 and 2, depending on the location and dimensions of the features and voids and the method used to probe for these features, these features and voids may or may not be detected ahead of

the tunnel excavation. When encountered, the dissolution features and voids will result in groundwater or mud inflow (Section 3.4), rockfalls, roof collapse, and apparent overbreak that must be filled.

In Tunnel Reach 3, it is expected that numerous dissolution features and voids exist within the Louisville Limestone above the tunnel and therefore remain undetected during tunnel excavation. When encountered, if individual heading spans or advances and their associated support length and types are not appropriate, and if ground support is not installed in the same shift, the dissolution features and voids will lead to flush groundwater inflows, inrush of infilling materials (when present), and possible collapse of the tunnel that would result in costly repairs and long delays.

3.2 Highly Weathered Zones, Fracture Zones and Zones of Poor Rock Quality

Because of the large tunnel cross section, it is anticipated that the excavations will encounter many weathered and fractured zones. Thick (greater than 5 feet) weathered and fractured zones containing clay along the horizontal partings encountered under shallow ground cover may lead to roof falls and possibly collapse of the excavation. The tunnel sections encountering weathered and fractured zones with thickness of 5 feet or more (measured as described above) will be automatically classified as ‘poor’ to ‘fair’ rock mass in Reaches 1 and 2, and ‘poor’ rock mass in Reach 3.

3.3 Faults

For baseline purpose, faults are defined as thick (over 20 feet in apparent thickness as measured along the tunnel axis) zones of crushed and/or sheared rock, gravel, sand, clay or other materials that bear no resemblance to the parent rock on both ends of the zone. No fault was observed in the three horizontal holes drilled along the crown of the pillar, the Southbound Tunnel, and the Northbound Tunnel. Faults, when encountered in the excavation, may lead to unstable heading, roof falls, and possibly collapse of the excavation. The baseline number of faults is one.

It is anticipated that zones 5- to 20-foot thick consisting of crushed and/or sheared rock, gravel, sand, clay or other materials that bear no resemblance to the parent rock on both ends of the zone will be encountered throughout the excavation. The tunnel sections encountering such features will be automatically classified as ‘poor’ to ‘fair’ rock mass in Reaches 1 and 2, and ‘poor’ rock mass in Reach 3.

3.4 Groundwater Inflow

Groundwater inflow will occur when the excavation encounters water bearing discontinuities or solutioning features. Due to the likely connection with the ground surface, inflows along solutioning features can be expected to increase during wet weather periods. Inflows along solutioning features will also increase if washout of the infill material within the solution features occurs. For baseline purposes, it is anticipated that instantaneous (flush) inflows into the heading upon encountering water bearing discontinuities or solutioning features will not exceed 300 gallons per minute (gpm) in each occurrence. If measures are

taken at the location of inflow to prevent washout of infilling materials, then the initial flow can be expected to decrease to 50 gpm within a week. However, the variation in flow may reflect the weather conditions (wet versus dry) more than the passage of time such that the decrease in inflow may not occur during the wet season.

The sustained flow at the portal will depend on the measure(s) taken at the newly excavated area(s) for controlling groundwater inflow. For baseline purposes, it is anticipated that the total sustained flow at the portal from each tunnel will not exceed 200 gpm. The baseline estimate of sustained flow at the portal assumes that measures will be taken at the newly excavated areas to seal off minor inflows and minimize larger inflow (by preventing washout of infilling materials).

3.5 Slaking or Expansion of Shale

The Waldron Shale exposed in the outcrops on road cuts or quarry walls is commonly slaked or eroded and has produced overhanging sections of the Louisville Limestone above. Similarly, cores of Waldron Shale recovered in ‘full sticks’ were often observed to disintegrate into thin discs along the bedding partings when left to dry in the air for periods as short as a few days. Also, about 10% of the shale samples tested for slake durability produced slake durability index of 80 or less. Thus, unless sealed immediately with shotcrete, the shale exposed in the portal and tunnel excavations will disintegrate and crumble and will result in unstable excavation requiring additional support and overbreak requiring additional concrete or shotcrete fill.

Where shale exists in the tunnel crown and shoulders, initial support must be designed to account for slaking behavior of the shale.

4.0 CONSTRUCTION CONSIDERATIONS

4.1 Portal

4.1.1 Portal Excavations

1. Based on the assumption that the portal excavations will be performed by drill and blast, the following geotechnical factors will be of major concern. Drilling for blasting, particularly during drilling for the uppermost lift will encounter a highly irregular top of rock; pinnacled limestone, remnant rock, and solutioned and vuggy rock. Blast holes will encounter solutioned, vuggy, and karstic rock.
2. At the portal face, the final rock face must be excavated in –a manner to allow immediate ground support after excavation.
3. The portal excavations will encounter near horizontally bedded layers of variable strength rock. Blasting will cause overbreak along the limits of the excavation particularly in those areas where weaker layers are adjacent to stronger layers, or where weak or more closely jointed rock layers are encountered. The overbreak will increase the requirement for spot rock support.
4. At the south portal, the presence of the relatively hard and thick bedded Laurel Dolomite in the lower foot or two of the excavation immediately below the relatively weaker and thinner bedded Waldron Shale will require careful assessment of subdrilling requirements.

4.1.2 Portal Excavation Support Systems

Portal support will consist of support elements furnished and installed and maintained to guard the stability of the excavation faces, reduce the amount of loosening and relaxation of the rock mass to be tunneled in, and reduce the potential for degradation of the Waldron Shale as it is exposed. While drilling for blasting may be performed in lifts of greater heights depending on other requirements, the excavation lifts may be limited to allow support installation.

In the south portal, the Waldron Shale will be exposed in the lower approximate 12 feet of the excavation (except for the very bottom as noted above), while the bulk of the excavation will occur in Louisville Limestone. For baseline purposes, 5% of the portal face area at the south portal is assumed to have exposed solution features that require stabilization. The required stabilization does not include any special measures at the pinnacled top of rock. In the north portal, there is 10 feet to 20 feet of Louisville Limestone above approximately 10 feet of Waldron Shale just above mid-height of the portal face, and then the lower approximate 30 feet of the portal excavation will be in Laurel Dolomite. For baseline purposes, 2% of the portal face area at the north portal is assumed to have exposed solution features that require stabilization. Again, the required stabilization does not include any treatment at the pinnacled top of rock. The solution features baselined above are not part of the subsurface dissolution features or voids discussed in Section 6.1; the voids in the portal faces and in the tunnels are characterized and baselined separately.

4.2 Tunnel

4.2.1 Method of Tunnel Excavation

4.2.1.1 Overview

The behavior of the ground described in the following sections is based on the assumption of tunnel excavation by heading and bench with multiple headings. It is expected that the excavation can be conducted using drill-and-blast or roadheader. It is also possible that a combination of roadheaders and drill-and-blast will be used for different parts of the excavation. Some considerations for the use of these excavation methods for this project are discussed below.

4.2.1.2 Drill-and-Blast Method

When choosing drill-and-blast excavation, it is the Developer's responsibility to develop appropriate blasting design and excavation procedures to reduce overbreak, to prevent excessive loosening, damage, or degradation of the rock mass bordering the excavation, and to address the following project-specific conditions:

1. The project performance specifications include requirements for blasting. These requirements include monitoring at specified locations and limits on peak particle velocity and airblast.
2. The large excavated area and the requirement to install ground support immediately after excavation will likely limit each advance for much of the tunneling length.
3. The excavation will encounter near horizontally bedded rock layers of variable strength. The blasting will cause significant overbreak along the perimeter of the excavation particularly in those areas where heading intersects weak rock layers. The overbreak along the perimeter will increase the requirement for ground support as well as the volume of shotcrete or concrete needed to form a smooth perimeter for the installation of waterproof liner and the final lining. The overbreak on the excavation face will produce overhanging conditions in the competent rock unit above the weak unit where the overbreak occurs; the overhang, in turn, will lead to block falls and unstable face that must be stabilized with thorough scaling and possibly the installation of ground support before proceeding with the next round of drill and blast.

4.2.1.3 Mechanical Excavators

4.2.1.3.1 Roadheader

Roadheader or other mechanical excavation techniques, if used, must address the following factors in the selection of the excavation system including the cutter head, cutting speed, and cutter head power:

- Variable rock strength with local presence of very strong rock
- Variable joint spacing where, as discussed in Section 2.4.2.2, approximately half of the bedding partings and joints encountered during the geotechnical investigation are spaced at 5 feet or more.
- Local presence of abrasive rock with CAI of 3 or more.

- Presence of horizontally bedded, alternating layers of strong and weak rock with the tendency of overcutting in the weak layers.
- Face instability and fall of rock blocks undermined by the overcutting of weak rock layer.
- Sporadic presence of chert nodules/layers.

To aid in the estimation of the performance of a roadheader, selected rock samples have been tested for punch penetration response, Cerchar Abrasiveness Index (CAI), uniaxial compressive strength, and Brazilian split tensile strength. Thin sections with mineralogical composition have also been performed on select samples. Some of the test results are summarized in Section 2.4.2.1.

4.2.1.3.2 TBM

Due to the dimension and the shape of the excavation, TBM is not feasible and therefore not considered in this GBR.

4.2.2 Tunneling Conditions by Reach

For baseline purposes, the tunnel has been divided into three reaches (Section 2.4.1) of Reach 1, Reach 2, and Reach 3. A general discussion of the lithology and the anticipated ground conditions in each reach is presented in Section 2.4.1.

4.2.2.1 Tunnel Reach 1

Tunnel Reach 1 extends from the South Portal to approximately Station 55+00. As the ground arch above the tunnel is not fully developed in the initial section of the tunnel inside the portal (approximately 1.5 to 2 times the excavated diameter of the heading), this initial section will have a very short or no standup time and may collapse if support is not installed before or immediately after the excavation, and if the support does not provide sufficient support pressure needed to provide a stable opening in the absence of a ground arch. For the rest of Tunnel Reach 1, the upper part of the excavation will be made within the Louisville Limestone with the Waldron Shale exposed at the invert and the sidewalls near the north end of Reach 1. In places, the Louisville Limestone is fractured and thinly bedded and prone to overbreak along the excavated perimeter, particularly at the roof of the excavation. The excavation will also encounter weathered and fractured zones that vary in thickness from several to tens of feet.

The excavation in Louisville Limestone will encounter karst features or dissolution features and voids. If encountered, the karst features will lead to flush groundwater inflow, inrush of infilling material, or collapse of the excavation.

The Waldron Shale at the invert will crumble and disintegrate if left unprotected to dry and soften or swell (slake) if exposed to free water and changes in humidity. Selected sections of the Waldron Shale that are weaker or more heavily jointed may require protection in the same shift when they are exposed to prevent the shale from adversely affecting the trafficability of the excavation and from undercutting the sidewalls.

4.2.2.2 Tunnel Reach 2

Tunnel Reach 2 extends from approximately Station 55+00 to Station 61+00. The excavation will encounter the vertical sequence of Louisville Limestone, the Waldron Shale, and the Laurel Dolomite. The excavation will also encounter weathered and fractured zones that vary in thickness from several to tens of feet.

Over the majority of the length of this reach, the Louisville Limestone will be exposed in the roof and the upper walls, the Waldron Shale will be exposed on the lower walls, and the Laurel Dolomite in the invert and the lower walls. The upper part of the excavation in this reach will therefore be conducted under 'mixed face' conditions with two and, in some places, three different formations exposed at the face of the excavation. As discussed in Section 4.2.2.1 above, the Louisville Limestone is susceptible to overbreak and roof falls in places where it is fractured and/or thinly bedded. In addition, the Louisville Limestone may contain karst features that, if encountered, would lead to flush groundwater inflow, inrush of infill material, or collapse of the excavation.

The Waldron Shale, being the weakest of the three formations and sandwiched between the two stronger formations of Louisville Limestone and Laurel Dolomite, will crumble, disintegrate, or swell if left unprotected. In addition, the limestone-shale contact is anticipated to be weak in places such that blocks of shale in the upper, overhang portion of the arch could part along the contact and fall. This would create significant overbreak if the fall occurred during blasting or cutting; this would also lead to unstable tunnel faces or sections unless the shale is supported in the same shift when it is exposed in the excavation. It is the Developer's responsibility to use appropriate blasting design or cutting procedures and timely installation of ground support to reduce the overbreak and maintain a stable excavation.

As the excavation continues its descent toward the northern end of Reach 2, the part of the Louisville Limestone exposed in the upper excavation will begin to thin out and may completely disappear in places. In places where the Louisville Limestone is located above the roof of the tunnel, the weak limestone-shale contact will be left holding the thin veneer or slab of shale at the roof of the tunnel before ground support is installed. In places where the contact is too weak to hold the thin slab of shale at the roof, or where the ground support is not installed in time, the shale slab at the roof will fall. The block fall, if not mitigated immediately, will lead to additional rock fall as the limestone blocks above the roof lose support and fall. Again, controlled blasting or cutting procedure and timely installation of ground support are essential to reduce overbreak and control roof falls. Regardless of the timing of support, limiting the unsupported span width and advance length will be vital to limiting overbreak, limiting rock falls, and maintaining tunnel stability.

The stability of the excavation will depend on geologic features such as the presence of karst features or the location and the conditions of the limestone-shale contact (amongst other features). These features, if

not identified before they are exposed in the excavation, could result in roof fall, inflow of groundwater or mud, or collapse of the excavation.

4.2.2.3 Tunnel Reach 3

Tunnel Reach 3 extends from Station 61+00 to the North Portal. The upper part of the excavation will be excavated in Louisville Limestone (on the southern section of the reach only), the Waldron Shale, and the Laurel Dolomite. The lower part of the excavation will be excavated exclusively in the Laurel Dolomite. The excavation will also encounter weathered and fractured zones that vary in thickness from several to tens of feet.

At the start of Reach 3, the Louisville Limestone will either disappear above the excavation or just touch the roof of the excavation. As the limestone-shale contact will follow an undulated profile, it is also expected that the Louisville Limestone will reappear at the roof from place to place. Once the Louisville Limestone recesses above the excavation, the roof of the excavation will contain a thin veneer or slab of Waldron Shale. In places where the shale is fractured or where the limestone-shale contact is weak or contains solutioning features, and where support is not installed either before excavation or immediately after excavation, the shale slab will fall. The roof fall, if not mitigated immediately as is necessary, will continue as the limestone above the contact begins to fall until a stable natural arch is restored. In places where the Louisville Limestone above the shale is heavily fractured or contains solution features, the process may continue until the whole section collapses unless appropriate excavation techniques and support timing are used.

It has been noted in Section 2 that the Louisville Limestone in Reach 3 appeared to be more heavily fractured than those in Reaches 1 and 2. One possible explanation for the poor rock mass quality is the shallow depth where the weathering process is more severe and the karst development more advanced. Because the Louisville Limestone may not be exposed (or may have only limited exposure) in the excavation, the presence of fractured or solutioning zones may not be known ahead of the excavation. As the ground arch cannot be developed in the fractured or solutioning zones, these zones, if encountered and if the section was not supported ahead of or in the same shift as the excavation, will lead to the collapse of the excavation.

4.2.2.4 Cross-Passages

There are cross-passages connecting the Northbound and the Southbound Tunnels. In comparison with the main excavation, the cross-passages are relatively small excavations that will mostly be made within the more competent Laurel Dolomite. The intersections between the cross-passages and the main tunnel contain protruding corners and are therefore susceptible to block or wedge fall during excavation. In addition, the excavation of the cross-passages will increase the effective span of the main tunnel

intersecting the passage. In these areas, the main excavation will require additional ground support in preparation for the increased span after the excavation of the cross-passages.

4.2.3 Initial Ground Support

It is the Developer's responsibility to take into account ground conditions and select and design the initial ground support to meet the following requirements:

1. Can be integrated into the excavation cycle and can be installed before or immediately after the excavation.
2. Provide sufficient flexibility to accommodate field changes initiated by the changing rock mass conditions observed in the probeholes or exposed in the excavation.
3. Compatible with the planned excavation sequence.
4. In Reach 3 where the ground arch may not exist or may only be partially formed because of the combination of low ground cover and fractured/solutioning limestone above the tunnel, provide sufficient support pressure to form a stable opening.
5. Be designed to guard against the most likely failure mode of block fallout as discussed in detail below.
6. Rock bolts, if used to support the roof and the upper arch, must be designed and installed to locate the anchor zone in the more competent Louisville Limestone above the limestone-shale contact.

In all reaches, unstable rock blocks will exist in the roof or the upper arch. Such blocks are typically bounded by ubiquitous bedding partings and other sub-horizontal discontinuity surfaces and, upon intersecting near-vertical adversely oriented discontinuities, will be prone to fallout in one of the following forms:

- Slab fallout that occurs during blasting or scaling caused by the tendency for rocks to break back to the sub-horizontal discontinuities
- Progressive failure by gradually loosening and fallout of small blocks of rock. This failure mode is more likely to occur in the Waldron Shale than the other two formations especially if initial support is not installed immediately after the tunnel is excavated.
- Block failure in the sidewalls if the Waldron Shale is left unprotected and allowed to crumble, disintegrate, or swell and undermine the Louisville Limestone above.

In all reaches, rockbolt anchorage will be affected by the karst and solutioned nature of the Louisville Limestone, and by the soft or slaking behavior of the Waldron Shale. The baseline rockbolt rejection and replacement rate due to inadequate anchorage is 15%.

The selection of initial ground support in the field is commonly guided by applying one of the established rock mass classification systems based on the conditions exposed in the excavation. However, as discussed in Section 2, the conditions anticipated in this project may be outside said database because of the unique project combination of large tunnel span, shallow ground cover, karst features and mixed-face conditions with the weaker Waldron Shale sandwiched between the two stronger formations of Louisville

Limestone and Laurel Dolomite. Because of the unique project conditions and because of the anticipated need to install the initial ground support before or immediately after the excavation, a simple classification system that can be quickly implemented and easily checked and confirmed in the field would be preferable to a sophisticated system. The Geomechanics Classification (RMR 1989) appears to capture the major rock mass characteristics affecting the stability of the excavation while remaining relatively simple and straightforward and therefore would serve as a suitable candidate as a primary tool for the purpose of selecting the initial ground support in the field. Considerable judgment, however, is still required in the application of the rock mass classification in a mixed-face tunnel to ensure that the rating weighs more heavily or exclusively to the rock formation, and rock mass features that will have the greatest impact on the stability of the opening.

4.2.4 Overbreak

Overbreak refers to the loss or removal of rock material outside the B-Line. The amount of overbreak depends on several factors; foremost among them are the following:

- Spacing between and strength of the rock discontinuities.
- Effects of blasting on the rock located beyond the B-Line.
- Distance between the working face and the roof support, and
- Length of time which elapses between the removal of the natural support of the roof and installation of the artificial support.

Overbreak is expected over the majority of the tunnel and especially in Reach 3 where the thin veneer or slab of shale above the roof is prone to break away from the weak limestone-shale contact and fall during blasting or cutting, during scaling, or if the initial ground support is not installed in time. The application of good workmanship and the use of proper controlled blasting and other excavation procedures will reduce but will not eliminate the overbreak. The Contractor's choice of excavation method and excavation technique will influence the amount of overbreak. Spaces created by dissolution features or voids of the first three types discussed in Section 3.1 outside the B-Line will be measured as part of overbreak. Space left by cavities of the fourth type discussed in Section 3.1 will not be measured as overbreak. The maximum allowable overbreak area, measured as the average cross sectional area of the area bounded by the B-Line and the excavated perimeter from overbreak, is 120, 160, and 200 square feet for Reaches 1, 2, and 3, respectively. These maximum overbreak areas assume good workmanship, controlled blasting (where drill-and-blast is used), pre-support, or prompt installation of initial ground support with each round of advance. As such, the maximum overbreak quantities presented above represent the maximum allowable that the Developer is permitted.

5.0 LIMITATIONS

The GBR is a contractual document establishing a baseline for bidding and for comparison with actual subsurface conditions encountered during construction. The GBR is not intended to specify ground conditions, or more importantly ground behavior, to the extent that the Developer is relieved of any and all responsibility of making their own interpretation of the ground conditions and behavior as different behavior than described herein may occur depending upon the means and methods, as well as workmanship, adopted by the Developer which are the responsibility of the Developer.

The GBR is not a representation of the actual subsurface conditions that will be encountered during construction. Rather, the GBR simply provides a baseline mutually accepted by the Owner and the Developer for defining potential changes in subsurface conditions. Not all changes will lead to additional payments to the Developer or credit to the Owner; as this process will be governed by other terms and conditions in the Contract Documents.

GOLDER ASSOCIATES INC.

Kuantsai Lee, Ph.D., P.E., G.E.
Principal

Mark Funkhouser, P.E.
Principal

KL/MF/bh

At Golder Associates we strive to be the most respected global group of companies specializing in ground engineering and environmental services. Employee owned since our formation in 1960, we have created a unique culture with pride in ownership, resulting in long-term organizational stability. Golder professionals take the time to build an understanding of client needs and of the specific environments in which they operate. We continue to expand our technical capabilities and have experienced steady growth with employees now operating from offices located throughout Africa, Asia, Australasia, Europe, North America and South America.

Africa	+ 27 11 254 4800
Asia	+ 852 2562 3658
Australasia	+ 61 3 8862 3500
Europe	+ 356 21 42 30 20
North America	+ 1 800 275 3281
South America	+ 55 21 3095 9500

solutions@golder.com
www.golder.com

Golder Associates Inc.
15851 South US 27, Suite 50
Lansing, MI 48906 USA

Golder Associates

Golder, Golder Associates and the GA globe design are trademarks of Golder Associates Corporation

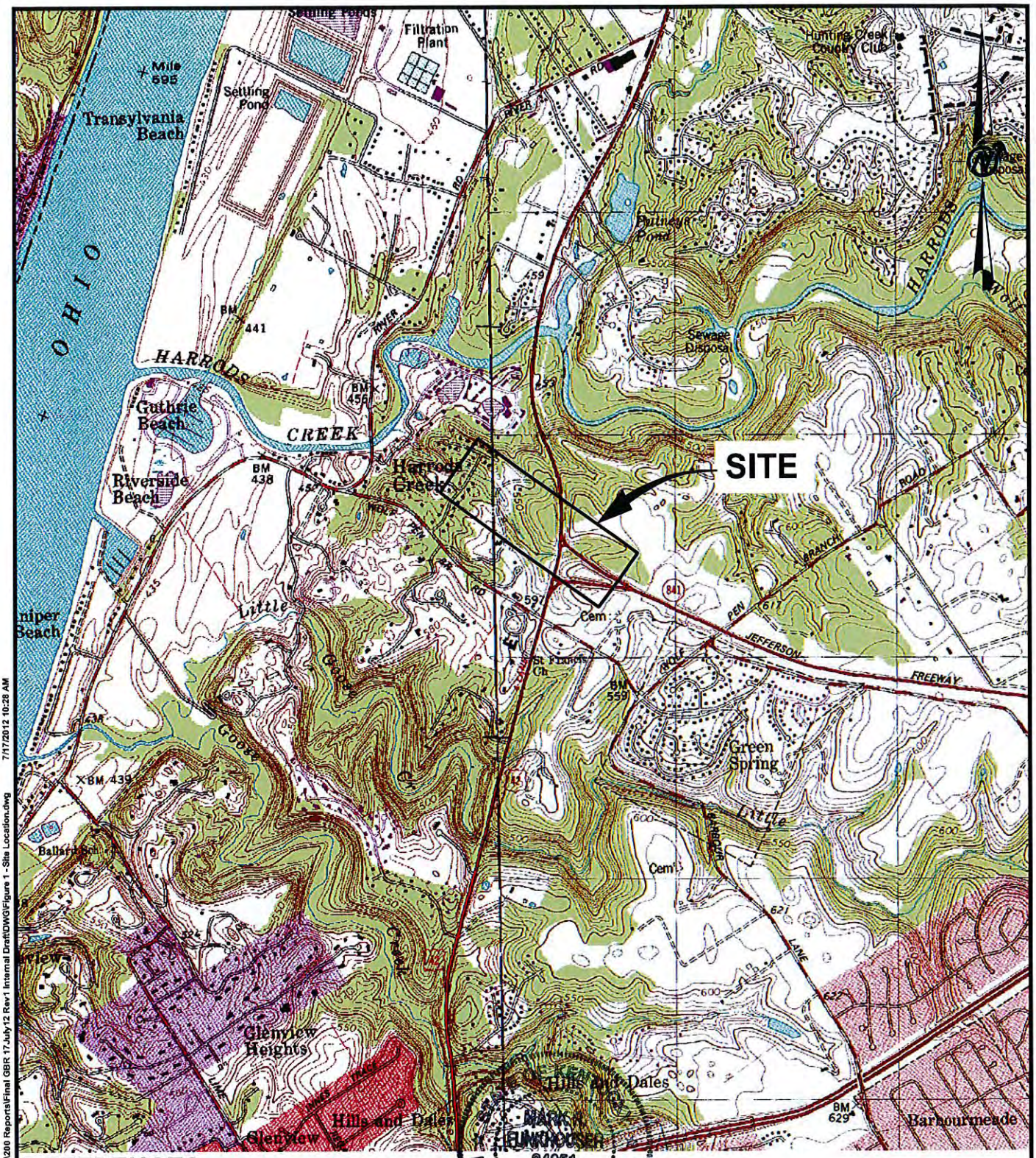

REFERENCES

USGS 7.5 MINUTE QUADRANGLES JEFFERSONVILLE IN-KY, 1993 AND ANCHORAGE, KY 1981 (PHOTOREVISED 1987)

2000 0 2000
SCALE FEET

Golder Associates St. Louis, Missouri	SCALE	AS SHOWN	TITLE
	DATE	03/12	SITE LOCATION MAP
	DESIGN	–	
	CADD	RJC	LOUISVILLE - SOUTHERN INDIANA OHIO RIVER BRIDGES PROJECT TWIN HIGHWAY TUNNELS
FILE No. Figure 1 - Site Location	CHECK	JCW	FIGURE 1
PROJECT No. 11388401 REV. 0	REVIEW	MNH	

P:\11xx-Projects\11388401 HW Lochner Louisville Tunnel KY\200 Reports\Final GBR 17July12 Rev1 Internal Draft\DWG\Figure 1 - Site Location.dwg 7/17/2012 10:28 AM

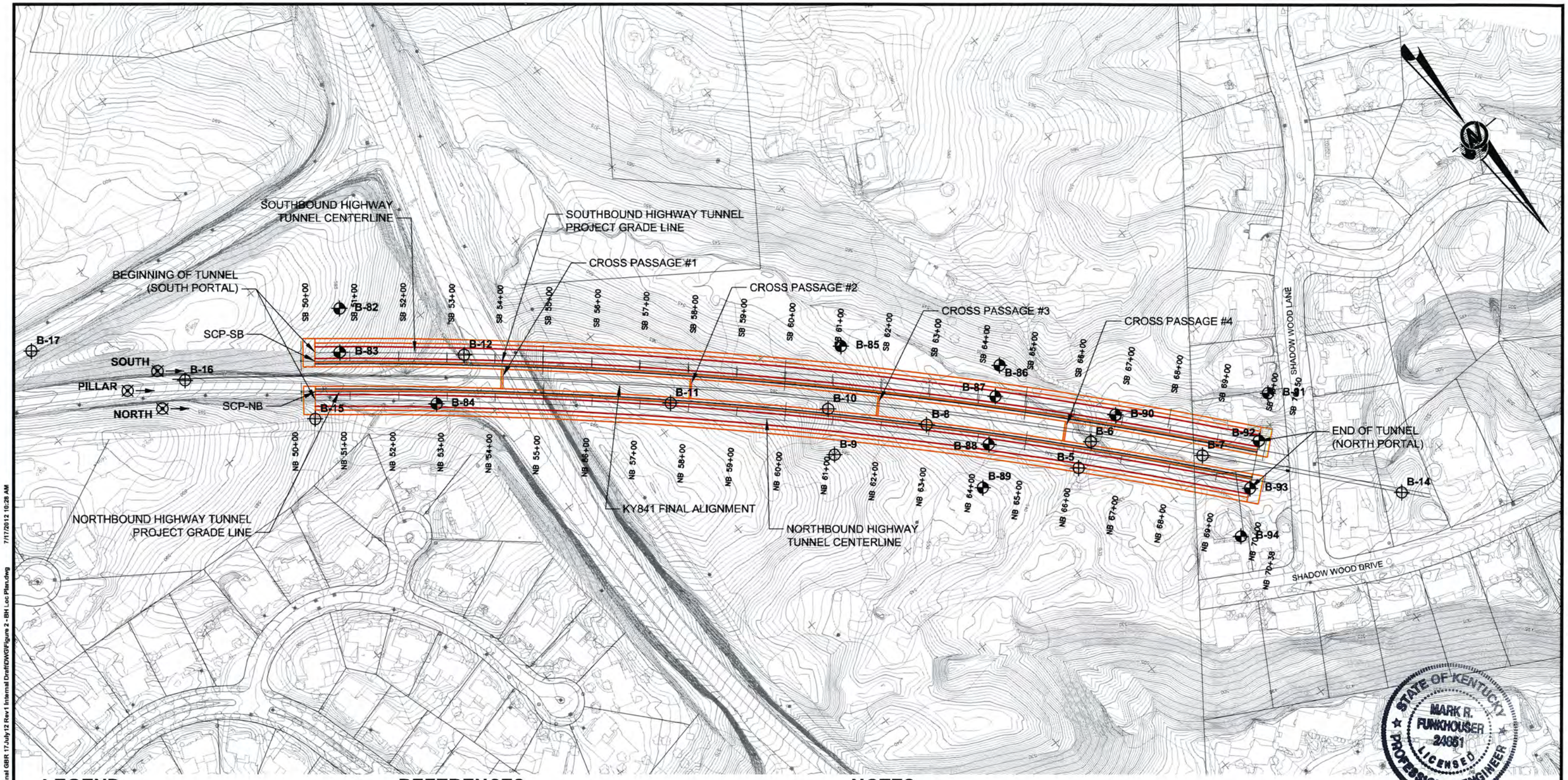

Mark R Funkhouser 27 JULY 2012

LEGEND

- ⊕ BOREHOLE BY FMSM (2005)
- ✦ BOREHOLE BY S&ME (2011)
- ⊗→ HORIZONTAL BOREHOLE (COLLAR LOCATION) BY S&ME (2011)

REFERENCES

1. GROUND SURFACE CONTOURS OBTAINED FROM AUTOCAD FILE, CON2_COMBINED.dwg PROVIDED BY H.W. LOCHNER.
2. PROPERTY LINE ALIGNMENT AND TUNNEL EXTENTS OBTAINED FROM AUTOCAD FILE G013.dwg PROVIDED BY H.W. LOCHNER.

NOTES

1. PROPERTY LINES AND EASEMENTS SHOWN HERE FOR REFERENCE ONLY.

200 0 200
SCALE FEET

REV	DATE	DES	REVISION DESCRIPTION	CADD	CHK	RVW
1	7/16/12	MRF	CORRECTED 2005 BORING LEGEND AND ADDED NOTE 1	MGG	MRF	

Golder Associates
St. Louis, Missouri

FILE No. Figure 2 - BH Loc Plan
PROJECT No. 113-88401 REV. 0

SCALE	AS SHOWN
DATE	03/12
DESIGN	–
CADD	RJC
CHECK	JCW
REVIEW	MNH

TITLE
BORING LOCATION MAP

LOUISVILLE - SOUTHERN INDIANA
OHIO RIVER BRIDGES PROJECT
TWIN HIGHWAY TUNNELS

FIGURE 2

P:\11xx\Projects\113884401 HW Lochner Louisville Tunnel KY280 Reports\Final GBR 17-July-12 Rev1 Internal Draft\DWG\Figure 2 - BH Loc Plan.dwg 7/17/2012 10:28 AM

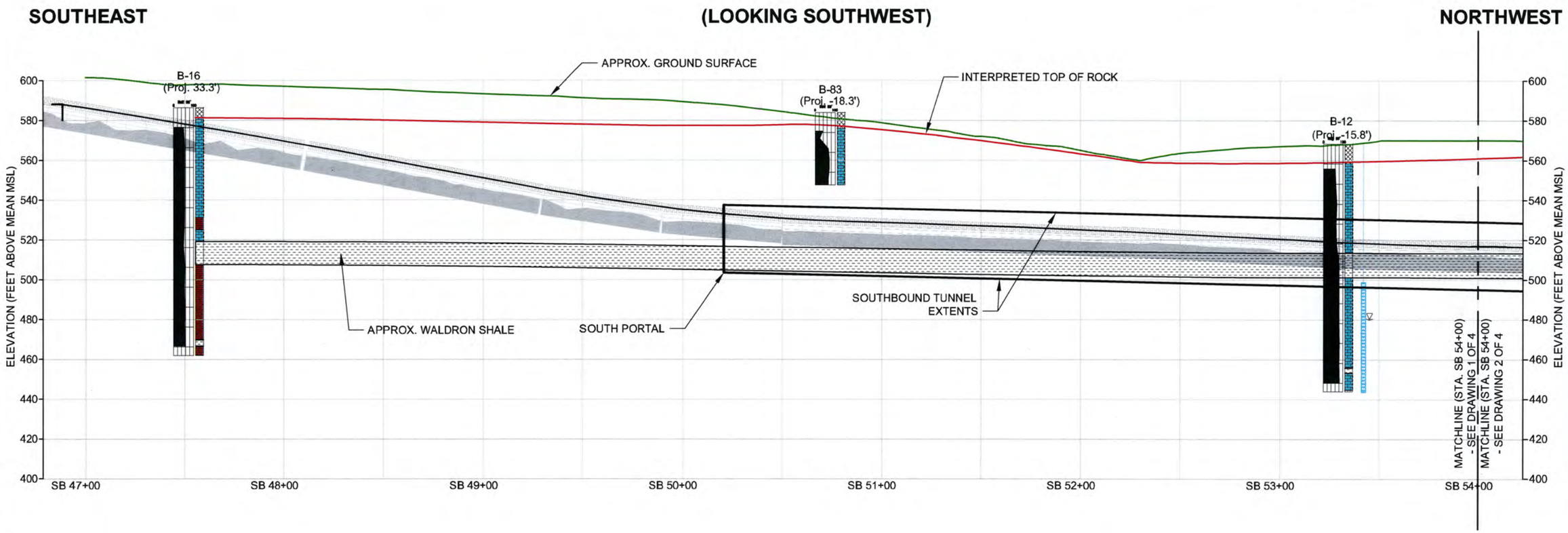

LEGEND

- OVERBURDEN
- LIMESTONE
- SHALE
- DOLOMITE
- SCREENED INTERVAL
- WATER LEVEL IN BOREHOLE, MONITORING WELL OR PIEZOMETER
- B9 — BOREHOLE NUMBER

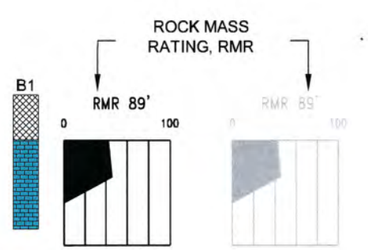

NOTES

1. GROUND SURFACE ELEVATION ALONG NORTH TUNNEL CENTERLINE, OBTAINED FROM AUTOCAD FILE, CON2_COMBINED_DEFAULT.dwg PROVIDED BY H.W. LOCHNER.

2. TUNNEL GEOMETRY OBTAINED FROM AUTOCAD FILE, HIGHWAY TUNNEL PROFILE 1to1-DEFAULT.dwg PROVIDED BY H.W. LOCHNER.

3. TOP OF ROCK INTERPOLATED BETWEEN BOREHOLES THEN ADJUSTED BASED ON GROUND SURFACE ELEVATION AND BY THE RESISTIVELY PROFILES GENERATED BY SM&E. TOP OF ROCK IS PINNACLED AND WILL VARY ON THE ORDER OF 10 ft. VERTICALLY OVER A FEW FEET HORIZONTALLY.

4. SHADED BOREHOLE INFORMATION IS OBTAINED FROM THE SOUTH HORIZONTAL BOREHOLE. THE HORIZONTAL BOREHOLE ELEVATION SHOWN HERE AS A SOLID LINE WITHIN THE SHADED BOREHOLE GRAPHIC TAKES PRECEDENCE OVER OTHER HORIZONTAL BOREHOLE ELEVATION DATA. THE HORIZONTAL BOREHOLE ELEVATION DATA IN THE 2011 SME GDR LOGS IS INCORRECT.

5. THE GEOLOGIC PROFILE AS DEPICTED ILLUSTRATES INTERPRETATION OF THE CONDITIONS AT THE SITE BASED ON THE CONDITIONS AT THE BORING LOCATION, GEOPHYSICAL SURVEY RESULTS, PUBLISHED GEOLOGIC INFORMATION AND JUDGMENT USING ACCEPTED GEOLOGIC, ENGINEERING AND HYDROLOGIC PRINCIPLES. CONDITIONS BETWEEN THE BORING LOCATION MAY VARY SUBSTANTIALLY FROM THOSE SHOWN ON THIS PROFILE. SPECIFIC DATA AT THE BORING LOCATION AND GEOPHYSICAL SURVEY RESULTS ARE PROVIDED IN THE GBR/GDR's.

STATE OF KENTUCKY
MARK R. FUNKHOUSER
24051
LICENSED
PROFESSIONAL ENGINEER

21 JULY 2012

REV	DATE	DES	REVISION DESCRIPTION	CADD	CHK	RVW
1	7/20/12	MRF	SUPPLEMENTED NOTE 4, Q CHANGED TO RMR	JJS	MRF	

50 0 50
SCALE FEET
NO VERTICAL EXAGGERATION

Golder Associates
St. Louis, Missouri

FILE No. Figure 3-10 - Lithologic Profiles
PROJECT No. 113-88401 REV. 0

SCALE	AS SHOWN
DATE	03/12
DESIGN	PJJ
CADD	PJJ
CHECK	JCW
REVIEW	MNH

TITLE
LITHOLOGIC PROFILE SOUTHBOUND (1 OF 4)

LOUISVILLE - SOUTHERN INDIANA
OHIO RIVER BRIDGES PROJECT
TWIN HIGHWAY TUNNELS

FIGURE 3

P:\11x-Projects\113884401 HW Lochner Louisville Tunnel KY\200 Reports\Final GBR 17July12 Rev1 Internal Draft\DWG\Figure 3-10 - Lithologic Profiles.dwg 7/20/2012 4:31 PM

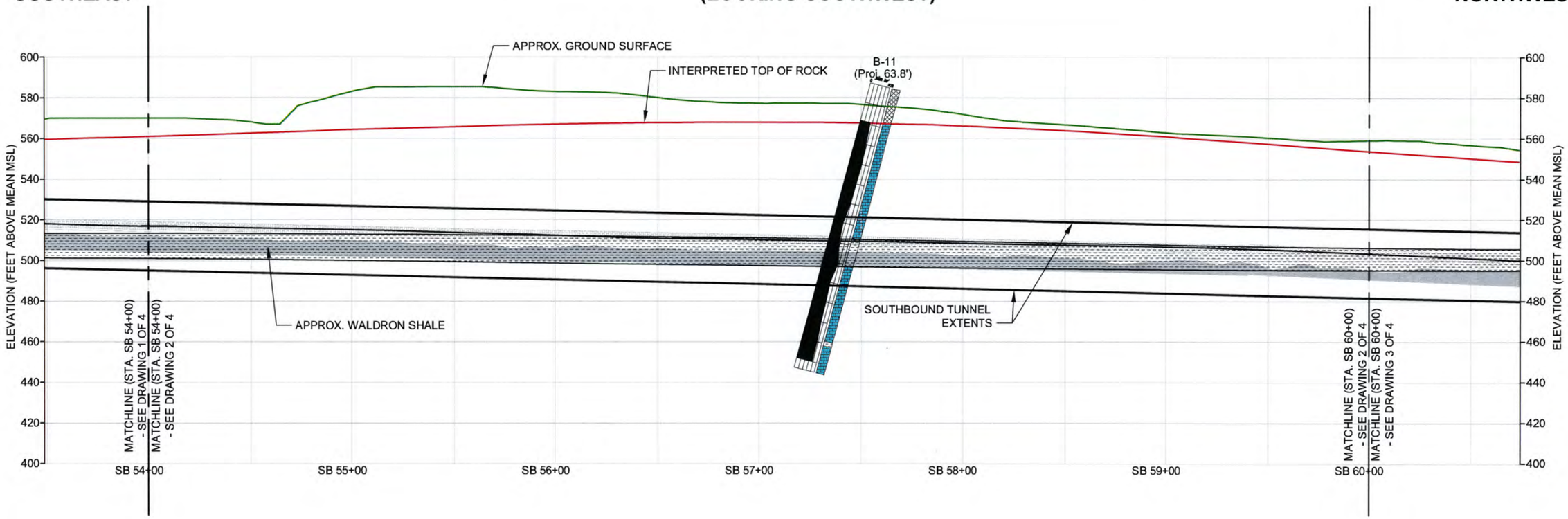

LEGEND

- OVERBURDEN
- LIMESTONE
- SHALE
- DOLOMITE
- SCREENED INTERVAL
- WATER LEVEL IN BOREHOLE, MONITORING WELL OR PIEZOMETER
- B9 — BOREHOLE NUMBER

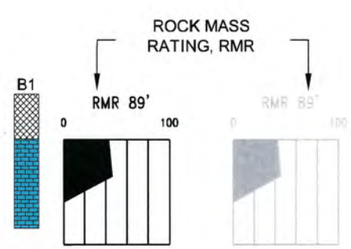

NOTES

1. GROUND SURFACE ELEVATION ALONG NORTH TUNNEL CENTERLINE, OBTAINED FROM AUTOCAD FILE, CON2_COMBINED_DEFAULT.dwg PROVIDED BY H.W. LOCHNER.

2. TUNNEL GEOMETRY OBTAINED FROM AUTOCAD FILE, HIGHWAY TUNNEL PROFILE 1to1-DEFAULT.dwg PROVIDED BY H.W. LOCHNER.

3. TOP OF ROCK INTERPOLATED BETWEEN BOREHOLES THEN ADJUSTED BASED ON GROUND SURFACE ELEVATION AND BY THE RESISTIVELY PROFILES GENERATED BY SM&E. TOP OF ROCK IS PINNACLED AND WILL VARY ON THE ORDER OF 10 ft. VERTICALLY OVER A FEW FEET HORIZONTALLY.

4. SHADED BOREHOLE INFORMATION IS OBTAINED FROM THE SOUTH HORIZONTAL BOREHOLE. THE HORIZONTAL BOREHOLE ELEVATION SHOWN HERE AS A SOLID LINE WITHIN THE SHADED BOREHOLE GRAPHIC TAKES PRECEDENCE OVER OTHER HORIZONTAL BOREHOLE ELEVATION DATA. THE HORIZONTAL BOREHOLE ELEVATION DATA IN THE 2011 SME GDR LOGS IS INCORRECT.

5. THE GEOLOGIC PROFILE AS DEPICTED ILLUSTRATES INTERPRETATION OF THE CONDITIONS AT THE SITE BASED ON THE CONDITIONS AT THE BORING LOCATION, GEOPHYSICAL SURVEY RESULTS, PUBLISHED GEOLOGIC INFORMATION AND JUDGMENT USING ACCEPTED GEOLOGIC, ENGINEERING AND HYDROLOGIC PRINCIPLES. CONDITIONS BETWEEN THE BORING LOCATION MAY VARY SUBSTANTIALLY FROM THOSE SHOWN ON THIS PROFILE. SPECIFIC DATA AT THE BORING LOCATION AND GEOPHYSICAL SURVEY RESULTS ARE PROVIDED IN THE GBR/GDR's.

STATE OF KENTUCKY
MARK R. FUNKHOUSER
24051
LICENSED
PROFESSIONAL ENGINEER

Mark R Funkhouser
21 JULY 2012

REV	DATE	DES	REVISION DESCRIPTION	CADD	CHK	RVW
1	7/20/12	MRF	SUPPLEMENTED NOTE 4, Q CHANGED TO RMR	JJS	MRF	

50 0 50
SCALE FEET
NO VERTICAL EXAGGERATION

Golder Associates
St. Louis, Missouri

FILE No. Figure 3-10 - Lithologic Profiles
PROJECT No. 113-88401 REV. 0

SCALE	AS SHOWN
DATE	03/12
DESIGN	PJJ
CADD	PJJ
CHECK	JCW
REVIEW	MNH

TITLE
LITHOLOGIC PROFILE SOUTHBOUND (2 OF 4)

LOUISVILLE - SOUTHERN INDIANA
OHIO RIVER BRIDGES PROJECT
TWIN HIGHWAY TUNNELS

FIGURE 4

P:\11x-Projects\113884401 HW Lochner Louisville Tunnel KY\200 Reports\Final GBR 17-July-12 Rev1 Internal Draft\DWG\Figure 3-10 - Lithologic Profiles.dwg 7/20/2012 4:31 PM

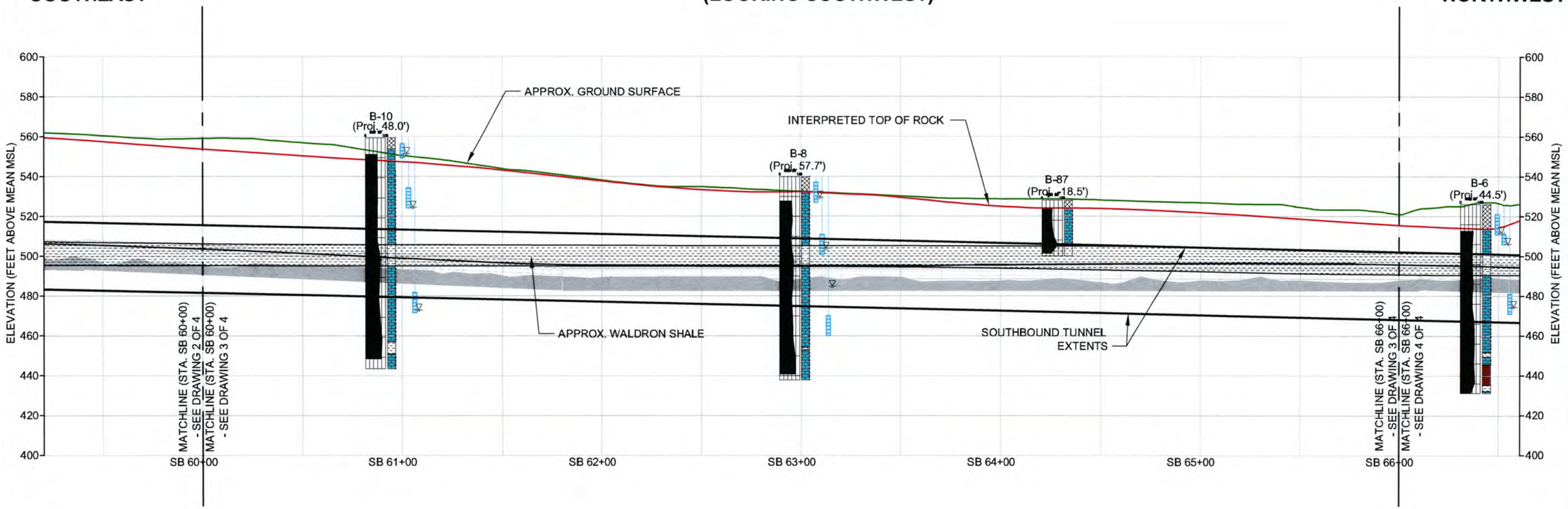

LEGEND

- OVERBURDEN
- LIMESTONE
- SHALE
- DOLOMITE
- SCREENED INTERVAL
- WATER LEVEL IN BOREHOLE, MONITORING WELL OR PIEZOMETER
- B9 — BOREHOLE NUMBER

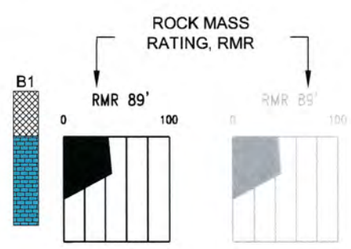

NOTES

1. GROUND SURFACE ELEVATION ALONG NORTH TUNNEL CENTERLINE, OBTAINED FROM AUTOCAD FILE, CON2_COMBINED_DEFAULT.dwg PROVIDED BY H.W. LOCHNER.

2. TUNNEL GEOMETRY OBTAINED FROM AUTOCAD FILE, HIGHWAY TUNNEL PROFILE 1to1-DEFAULT.dwg PROVIDED BY H.W. LOCHNER.

3. TOP OF ROCK INTERPOLATED BETWEEN BOREHOLES THEN ADJUSTED BASED ON GROUND SURFACE ELEVATION AND BY THE RESISTIVELY PROFILES GENERATED BY SM&E. TOP OF ROCK IS PINNACLED AND WILL VARY ON THE ORDER OF 10 ft. VERTICALLY OVER A FEW FEET HORIZONTALLY.

4. SHADED BOREHOLE INFORMATION IS OBTAINED FROM THE SOUTH HORIZONTAL BOREHOLE. THE HORIZONTAL BOREHOLE ELEVATION SHOWN HERE AS A SOLID LINE WITHIN THE SHADED BOREHOLE GRAPHIC TAKES PRECEDENCE OVER OTHER HORIZONTAL BOREHOLE ELEVATION DATA. THE HORIZONTAL BOREHOLE ELEVATION DATA IN THE 2011 SME GDR LOGS IS INCORRECT.

5. THE GEOLOGIC PROFILE AS DEPICTED ILLUSTRATES INTERPRETATION OF THE CONDITIONS AT THE SITE BASED ON THE CONDITIONS AT THE BORING LOCATION, GEOPHYSICAL SURVEY RESULTS, PUBLISHED GEOLOGIC INFORMATION AND JUDGMENT USING ACCEPTED GEOLOGIC, ENGINEERING AND HYDROLOGIC PRINCIPLES. CONDITIONS BETWEEN THE BORING LOCATION MAY VARY SUBSTANTIALLY FROM THOSE SHOWN ON THIS PROFILE. SPECIFIC DATA AT THE BORING LOCATION AND GEOPHYSICAL SURVEY RESULTS ARE PROVIDED IN THE GBR/GDR's.

STATE OF KENTUCKY
MARK R. FUNKHOUSER
24061
LICENSED
PROFESSIONAL ENGINEER
21 JULY 2012

REV	DATE	DES	REVISION DESCRIPTION	CADD	CHK	RVW
1	7/20/12	MRF	SUPPLEMENTED NOTE 4, Q CHANGED TO RMR	JJS	MRF	

50 0 50
SCALE FEET
NO VERTICAL EXAGGERATION

Golder Associates
St. Louis, Missouri

FILE No. Figure 3-10 - Lithologic Profiles
PROJECT No. 113-88401 REV. 0

SCALE	AS SHOWN
DATE	03/12
DESIGN	PJJ
CADD	PJJ
CHECK	JCW
REVIEW	MNH

TITLE
LITHOLOGIC PROFILE SOUTHBOUND (3 OF 4)

LOUISVILLE - SOUTHERN INDIANA
OHIO RIVER BRIDGES PROJECT
TWIN HIGHWAY TUNNELS

FIGURE 5

P:\11x-Projects\113884-01 HW Lochner Louisville Tunnel KY\200 Reports\Final GBR 17-July 12 Rev1 Internal Draft\DWG\Figure 3-10 - Lithologic Profiles.dwg 7/20/2012 4:31 PM

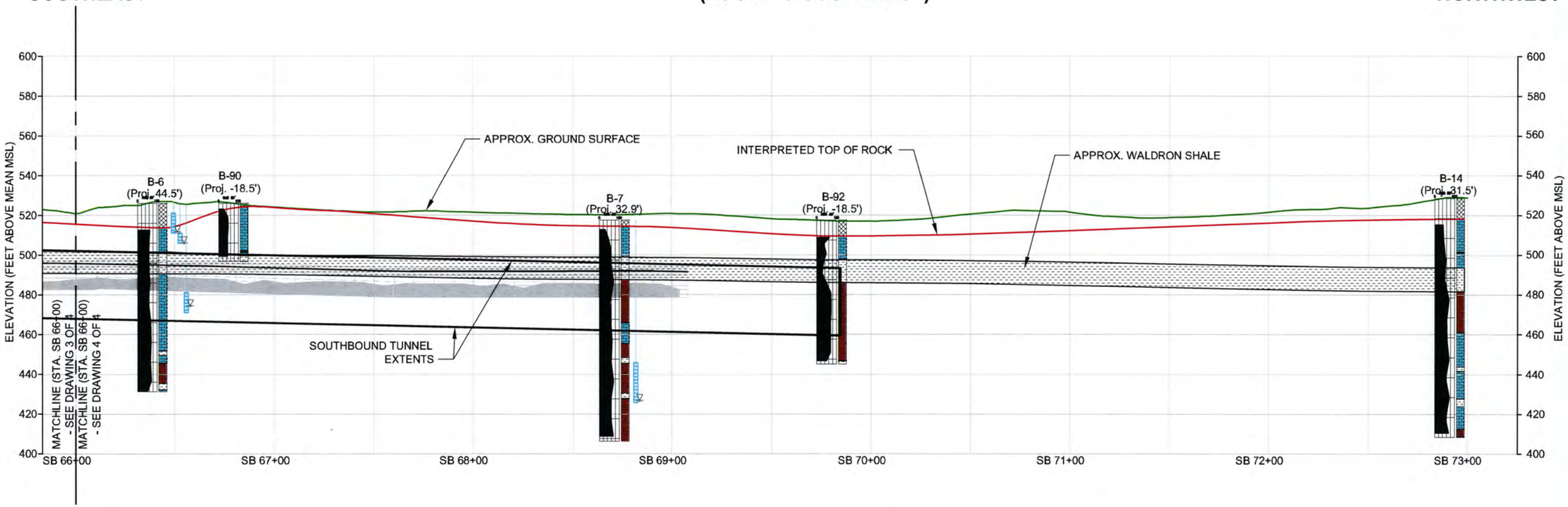

LEGEND

- OVERBURDEN
- LIMESTONE
- SHALE
- DOLOMITE
- SCREENED INTERVAL
- WATER LEVEL IN BOREHOLE, MONITORING WELL OR PIEZOMETER
- B9 — BOREHOLE NUMBER

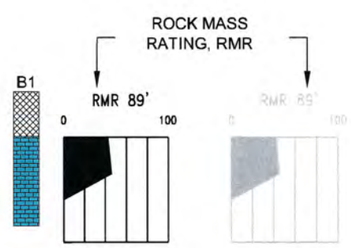

NOTES

1. GROUND SURFACE ELEVATION ALONG NORTH TUNNEL CENTERLINE, OBTAINED FROM AUTOCAD FILE, CON2_COMBINED_DEFAULT.dwg PROVIDED BY H.W. LOCHNER.

2. TUNNEL GEOMETRY OBTAINED FROM AUTOCAD FILE, HIGHWAY TUNNEL PROFILE 1to1-DEFAULT.dwg PROVIDED BY H.W. LOCHNER.

3. TOP OF ROCK INTERPOLATED BETWEEN BOREHOLES THEN ADJUSTED BASED ON GROUND SURFACE ELEVATION AND BY THE RESISTIVELY PROFILES GENERATED BY SM&E. TOP OF ROCK IS PINNACLED AND WILL VARY ON THE ORDER OF 10 ft. VERTICALLY OVER A FEW FEET HORIZONTALLY.

4. SHADED BOREHOLE INFORMATION IS OBTAINED FROM THE SOUTH HORIZONTAL BOREHOLE. THE HORIZONTAL BOREHOLE ELEVATION SHOWN HERE AS A SOLID LINE WITHIN THE SHADED BOREHOLE GRAPHIC TAKES PRECEDENCE OVER OTHER HORIZONTAL BOREHOLE ELEVATION DATA. THE HORIZONTAL BOREHOLE ELEVATION DATA IN THE 2011 SME GDR LOGS IS INCORRECT.

5. THE GEOLOGIC PROFILE AS DEPICTED ILLUSTRATES INTERPRETATION OF THE CONDITIONS AT THE SITE BASED ON THE CONDITIONS AT THE BORING LOCATION, GEOPHYSICAL SURVEY RESULTS, PUBLISHED GEOLOGIC INFORMATION AND JUDGMENT USING ACCEPTED GEOLOGIC, ENGINEERING AND HYDROLOGIC PRINCIPLES. CONDITIONS BETWEEN THE BORING LOCATION MAY VARY SUBSTANTIALLY FROM THOSE SHOWN ON THIS PROFILE. SPECIFIC DATA AT THE BORING LOCATION AND GEOPHYSICAL SURVEY RESULTS ARE PROVIDED IN THE GBR/GDR's.

STATE OF KENTUCKY
MARK R. FUNKHOUSER
24661
LICENSED
PROFESSIONAL ENGINEER
21 JULY 2012

REV	DATE	DES	REVISION DESCRIPTION	CADD	CHK	RVW
1	7/20/12	MRF	SUPPLEMENTED NOTE 4, Q CHANGED TO RMR	JJS	MRF	

50 0 50
SCALE FEET
NO VERTICAL EXAGGERATION

Golder Associates
St. Louis, Missouri

FILE No. Figure 3-10 - Lithologic Profiles
PROJECT No. 113-88401 REV. 0

SCALE	AS SHOWN
DATE	03/12
DESIGN	PJJ
CADD	PJJ
CHECK	JCW
REVIEW	MNH

TITLE
LITHOLOGIC PROFILE SOUTHBOUND (4 OF 4)

LOUISVILLE - SOUTHERN INDIANA
OHIO RIVER BRIDGES PROJECT
TWIN HIGHWAY TUNNELS

FIGURE 6

P:\11xx\Projects\113884011 HW Lochner Louisville Tunnel KY\200 Reports\Final GBR 17-July12 Rev1 Internal Draft\DWG\Figure 3-10 - Lithologic Profiles.dwg 7/20/2012 4:31 PM

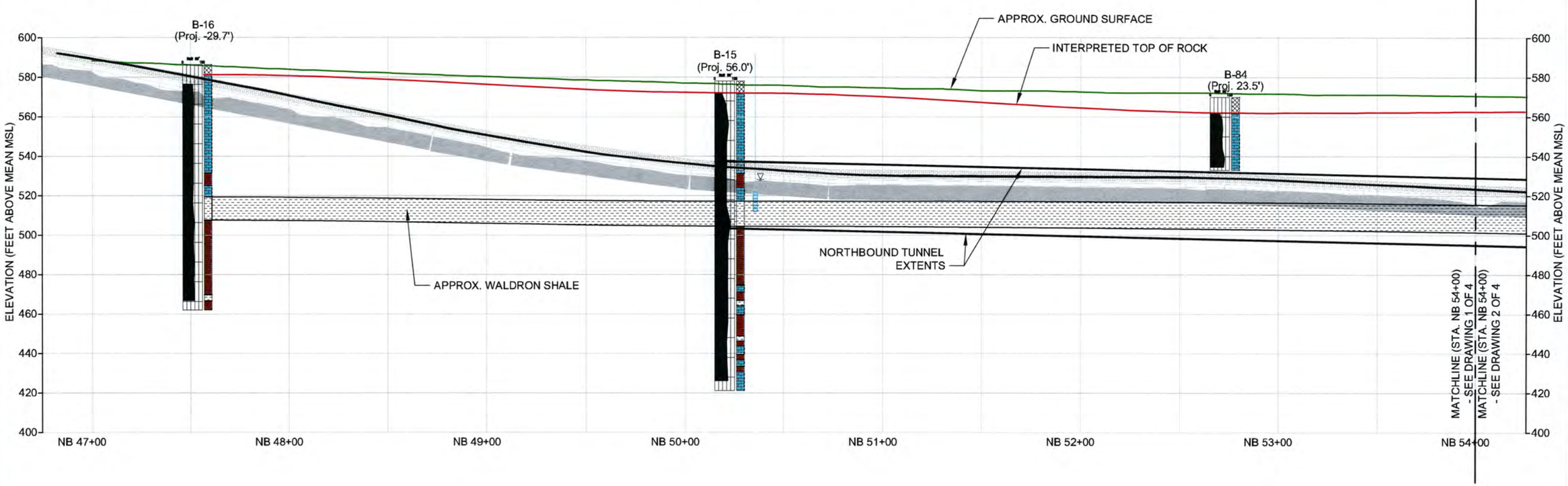

LEGEND

- OVERBURDEN
- LIMESTONE
- SHALE
- DOLOMITE
- SCREENED INTERVAL
- WATER LEVEL IN BOREHOLE, MONITORING WELL OR PIEZOMETER
- B9 — BOREHOLE NUMBER

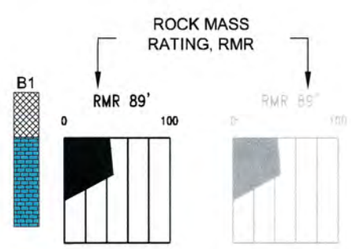

NOTES

1. GROUND SURFACE ELEVATION ALONG NORTH TUNNEL CENTERLINE, OBTAINED FROM AUTOCAD FILE, CON2_COMBINED_DEFAULT.dwg PROVIDED BY H.W. LOCHNER.

2. TUNNEL GEOMETRY OBTAINED FROM AUTOCAD FILE, HIGHWAY TUNNEL PROFILE 1to1-DEFAULT.dwg PROVIDED BY H.W. LOCHNER.

3. TOP OF ROCK INTERPOLATED BETWEEN BOREHOLES THEN ADJUSTED BASED ON GROUND SURFACE ELEVATION AND BY THE RESISTIVELY PROFILES GENERATED BY SM&E. TOP OF ROCK IS PINNACLED AND WILL VARY ON THE ORDER OF 10 ft. VERTICALLY OVER A FEW FEET HORIZONTALLY.

4. SHADED BOREHOLE INFORMATION IS OBTAINED FROM THE NORTH HORIZONTAL BOREHOLE. THE HORIZONTAL BOREHOLE ELEVATION SHOWN HERE AS A SOLID LINE WITHIN THE SHADED BOREHOLE GRAPHIC TAKES PRECEDENCE OVER OTHER HORIZONTAL BOREHOLE ELEVATION DATA. THE HORIZONTAL BOREHOLE ELEVATION DATA IN THE 2011 SME GDR LOGS IS INCORRECT.

5. THE GEOLOGIC PROFILE AS DEPICTED ILLUSTRATES INTERPRETATION OF THE CONDITIONS AT THE SITE BASED ON THE CONDITIONS AT THE BORING LOCATION, GEOPHYSICAL SURVEY RESULTS, PUBLISHED GEOLOGIC INFORMATION AND JUDGMENT USING ACCEPTED GEOLOGIC, ENGINEERING AND HYDROLOGIC PRINCIPLES. CONDITIONS BETWEEN THE BORING LOCATION MAY VARY SUBSTANTIALLY FROM THOSE SHOWN ON THIS PROFILE. SPECIFIC DATA AT THE BORING LOCATION AND GEOPHYSICAL SURVEY RESULTS ARE PROVIDED IN THE GBR/GDR's.

STATE OF KENTUCKY
MARK R. FUNKHOUSER
24061
LICENSED
PROFESSIONAL ENGINEER
21 JULY 2012

REV	DATE	DES	REVISION DESCRIPTION	CADD	CHK	RVW
1	7/20/12	MRF	SUPPLEMENTED NOTE 4, Q CHANGED TO RMR	JJS	MRF	

50 0 50
SCALE FEET
NO VERTICAL EXAGGERATION

Golder Associates
St. Louis, Missouri

FILE No. Figure 3-10 - Lithologic Profiles
PROJECT No. 113-88401 REV. 0

SCALE	AS SHOWN
DATE	03/12
DESIGN	PJJ
CADD	PJJ
CHECK	JCW
REVIEW	MNH

TITLE
LITHOLOGIC PROFILE NORTHBOUND (1 OF 4)

LOUISVILLE - SOUTHERN INDIANA
OHIO RIVER BRIDGES PROJECT
TWIN HIGHWAY TUNNELS

FIGURE 7

P:\11x-Projects\113884-01 HW Lochner Louisville Tunnel KY\200 Reports\Final GBR 17-July 12 Rev1 Internal Draft\DWG\Figure 3-10 - Lithologic Profiles.dwg 7/20/2012 4:31 PM

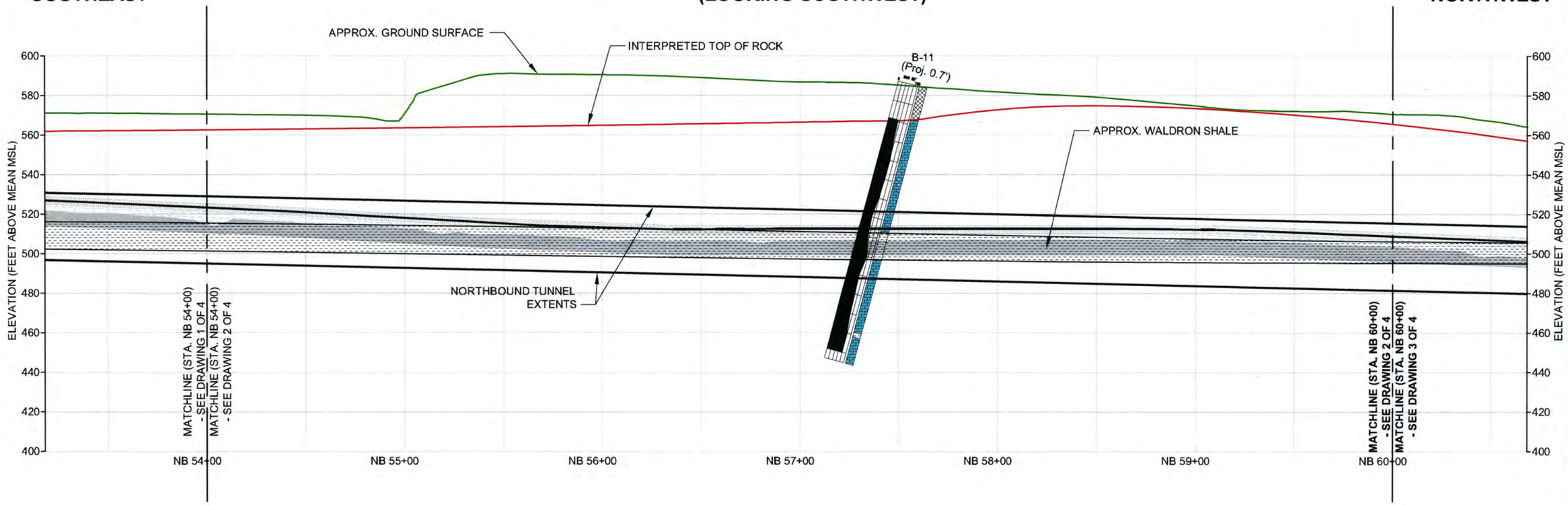

LEGEND

- OVERBURDEN
- LIMESTONE
- SHALE
- DOLOMITE
- SCREENED INTERVAL
- WATER LEVEL IN BOREHOLE, MONITORING WELL OR PIEZOMETER
- B9 — BOREHOLE NUMBER

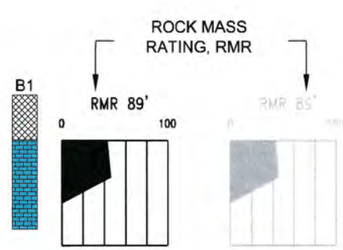

NOTES

1. GROUND SURFACE ELEVATION ALONG NORTH TUNNEL CENTERLINE, OBTAINED FROM AUTOCAD FILE, CON2_COMBINED_DEFAULT.dwg PROVIDED BY H.W. LOCHNER.

2. TUNNEL GEOMETRY OBTAINED FROM AUTOCAD FILE, HIGHWAY TUNNEL PROFILE 1to1-DEFAULT.dwg PROVIDED BY H.W. LOCHNER.

3. TOP OF ROCK INTERPOLATED BETWEEN BOREHOLES THEN ADJUSTED BASED ON GROUND SURFACE ELEVATION AND BY THE RESISTIVELY PROFILES GENERATED BY SM&E. TOP OF ROCK IS PINNACLED AND WILL VARY ON THE ORDER OF 10 ft. VERTICALLY OVER A FEW FEET HORIZONTALLY.

4. SHADED BOREHOLE INFORMATION IS OBTAINED FROM THE NORTH HORIZONTAL BOREHOLE. THE HORIZONTAL BOREHOLE ELEVATION SHOWN HERE AS A SOLID LINE WITHIN THE SHADED BOREHOLE GRAPHIC TAKES PRECEDENCE OVER OTHER HORIZONTAL BOREHOLE ELEVATION DATA. THE HORIZONTAL BOREHOLE ELEVATION DATA IN THE 2011 SME GDR LOGS IS INCORRECT.

5. THE GEOLOGIC PROFILE AS DEPICTED ILLUSTRATES INTERPRETATION OF THE CONDITIONS AT THE SITE BASED ON THE CONDITIONS AT THE BORING LOCATION, GEOPHYSICAL SURVEY RESULTS, PUBLISHED GEOLOGIC INFORMATION AND JUDGMENT USING ACCEPTED GEOLOGIC, ENGINEERING AND HYDROLOGIC PRINCIPLES. CONDITIONS BETWEEN THE BORING LOCATION MAY VARY SUBSTANTIALLY FROM THOSE SHOWN ON THIS PROFILE. SPECIFIC DATA AT THE BORING LOCATION AND GEOPHYSICAL SURVEY RESULTS ARE PROVIDED IN THE GBR/GDR's.

STATE OF KENTUCKY
MARK R. FUNCHOUSER
24951
LICENSED
PROFESSIONAL ENGINEER
Mark R. Funchouser
23 JULY 2012

REV	DATE	DES	REVISION DESCRIPTION	CADD	CHK	RVW
1	7/20/12	MRF	SUPPLEMENTED NOTE 4, Q CHANGED TO RMR	JJS	MRF	

50 0 50
SCALE FEET
NO VERTICAL EXAGGERATION

Golder Associates
St. Louis, Missouri

FILE No. Figure 3-10 - Lithologic Profiles
PROJECT No. 113-88401 REV. 0

SCALE	AS SHOWN
DATE	03/12
DESIGN	PJJ
CADD	PJJ
CHECK	JCW
REVIEW	MNH

TITLE
LITHOLOGIC PROFILE NORTHBOUND (2 OF 4)

LOUISVILLE - SOUTHERN INDIANA
OHIO RIVER BRIDGES PROJECT
TWIN HIGHWAY TUNNELS

FIGURE 8

P:\11x-Projects\113884-01 HW Lochner Louisville Tunnel KY\200 Reports\Final GBR 17-July12 Rev1 Internal Draft\DWG\Figure 3-10 - Lithologic Profiles.dwg 7/20/2012 4:31 PM

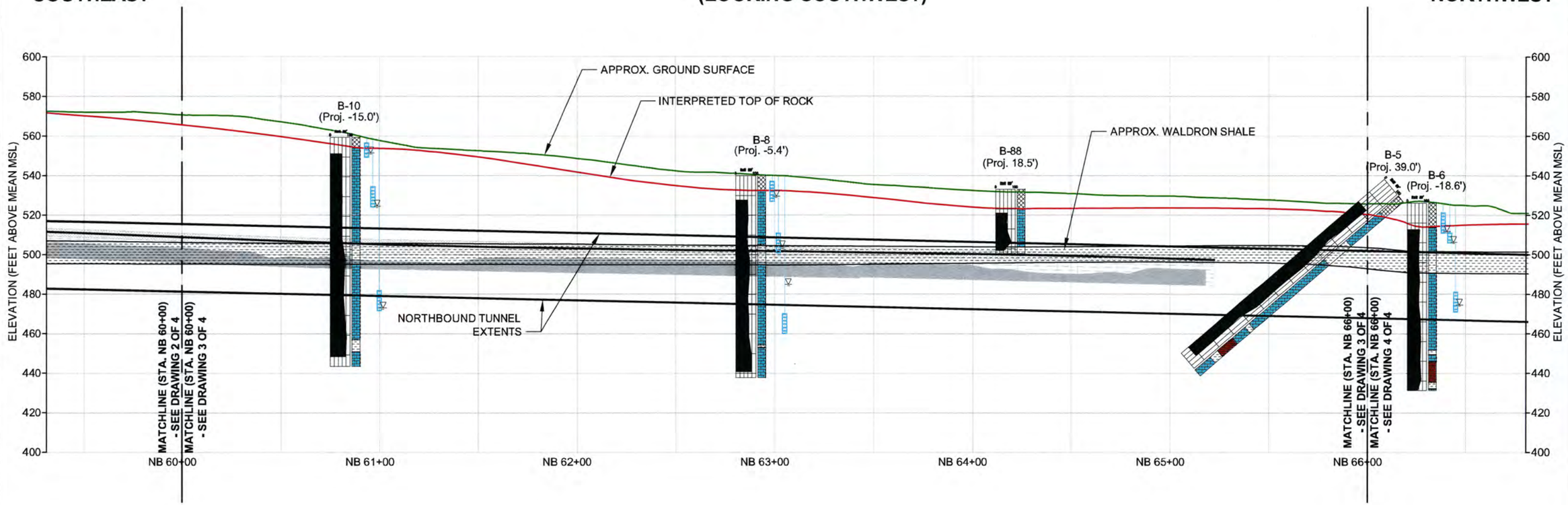

LEGEND

- OVERBURDEN
- LIMESTONE
- SHALE
- DOLOMITE
- SCREENED INTERVAL
- WATER LEVEL IN BOREHOLE, MONITORING WELL OR PIEZOMETER
- B9 — BOREHOLE NUMBER

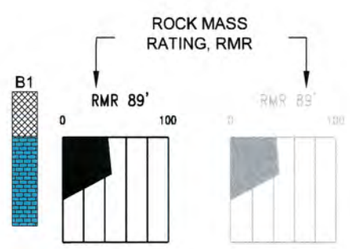

NOTES

1. GROUND SURFACE ELEVATION ALONG NORTH TUNNEL CENTERLINE, OBTAINED FROM AUTOCAD FILE, CON2_COMBINED_DEFAULT.dwg PROVIDED BY H.W. LOCHNER.

2. TUNNEL GEOMETRY OBTAINED FROM AUTOCAD FILE, HIGHWAY TUNNEL PROFILE 1to1-DEFAULT.dwg PROVIDED BY H.W. LOCHNER.

3. TOP OF ROCK INTERPOLATED BETWEEN BOREHOLES THEN ADJUSTED BASED ON GROUND SURFACE ELEVATION AND BY THE RESISTIVELY PROFILES GENERATED BY SM&E. TOP OF ROCK IS PINNACLED AND WILL VARY ON THE ORDER OF 10 ft. VERTICALLY OVER A FEW FEET HORIZONTALLY.

4. SHADED BOREHOLE INFORMATION IS OBTAINED FROM THE NORTH HORIZONTAL BOREHOLE. THE HORIZONTAL BOREHOLE ELEVATION SHOWN HERE AS A SOLID LINE WITHIN THE SHADED BOREHOLE GRAPHIC TAKES PRECEDENCE OVER OTHER HORIZONTAL BOREHOLE ELEVATION DATA. THE HORIZONTAL BOREHOLE ELEVATION DATA IN THE 2011 SME GDR LOGS IS INCORRECT.

5. THE GEOLOGIC PROFILE AS DEPICTED ILLUSTRATES INTERPRETATION OF THE CONDITIONS AT THE SITE BASED ON THE CONDITIONS AT THE BORING LOCATION, GEOPHYSICAL SURVEY RESULTS, PUBLISHED GEOLOGIC INFORMATION AND JUDGMENT USING ACCEPTED GEOLOGIC, ENGINEERING AND HYDROLOGIC PRINCIPLES. CONDITIONS BETWEEN THE BORING LOCATION MAY VARY SUBSTANTIALLY FROM THOSE SHOWN ON THIS PROFILE. SPECIFIC DATA AT THE BORING LOCATION AND GEOPHYSICAL SURVEY RESULTS ARE PROVIDED IN THE GBR/GDR's.

STATE OF KENTUCKY
MARK R. FUNKHOUSER
24851
LICENSED
PROFESSIONAL ENGINEER
Mark R. Funkhouser
23 JULY 2012

REV	DATE	DES	REVISION DESCRIPTION	CADD	CHK	RVW
1	7/20/12	MRF	SUPPLEMENTED NOTE 4, Q CHANGED TO RMR	JJS	MRF	

50 0 50
SCALE FEET
NO VERTICAL EXAGGERATION

Golder Associates
St. Louis, Missouri

FILE No. Figure 3-10 - Lithologic Profiles
PROJECT No. 113-88401 REV. 0

SCALE	AS SHOWN
DATE	03/12
DESIGN	PJJ
CADD	PJJ
CHECK	JCW
REVIEW	MNH

TITLE
LITHOLOGIC PROFILE NORTHBOUND (3 OF 4)

LOUISVILLE - SOUTHERN INDIANA
OHIO RIVER BRIDGES PROJECT
TWIN HIGHWAY TUNNELS

FIGURE 9

P:\11x-Projects\113884 01 HW Lochner Louisville Tunnel KY200 Reports\Final GBR 17July12 Rev1 Internal Draft\DWG\Figure 3-10 - Lithologic Profiles.dwg 7/20/2012 4:31 PM

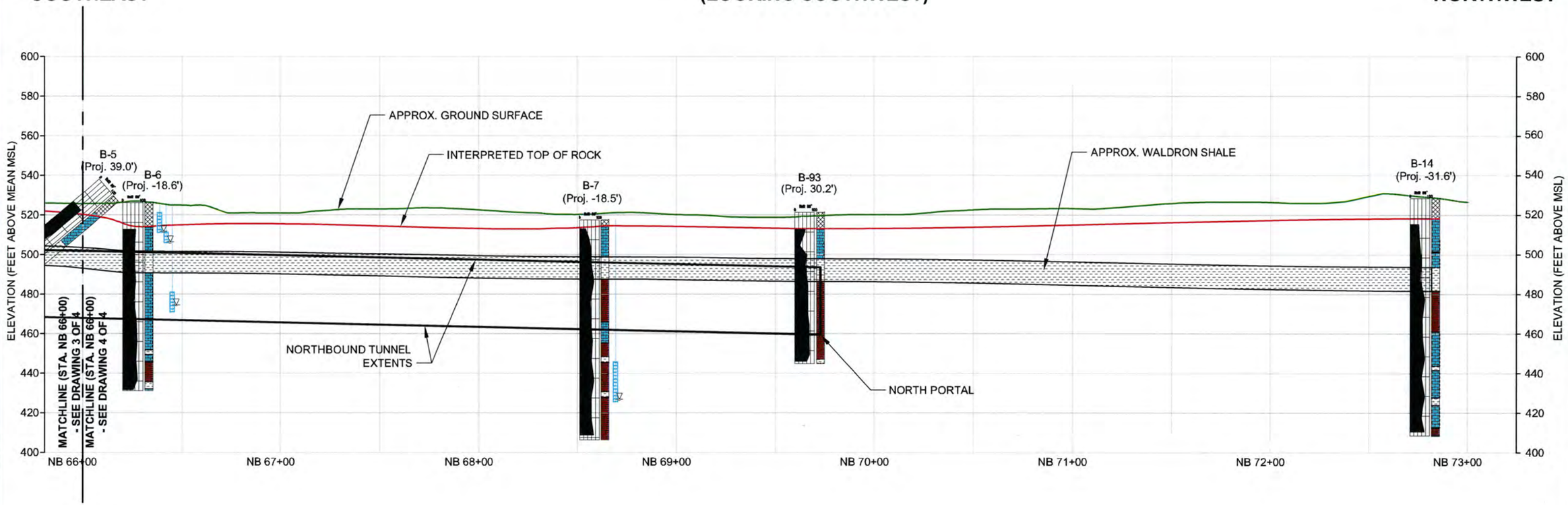

LEGEND

OVERBURDEN

LIMESTONE

SHALE

DOLOMITE

SCREENED INTERVAL

WATER LEVEL IN BOREHOLE, MONITORING WELL OR PIEZOMETER

B9 BOREHOLE NUMBER

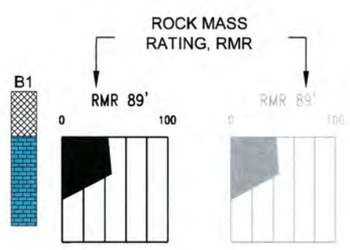

NOTES

1. GROUND SURFACE ELEVATION ALONG NORTH TUNNEL CENTERLINE, OBTAINED FROM AUTOCAD FILE, CON2_COMBINED_DEFAULT.dwg PROVIDED BY H.W. LOCHNER.

2. TUNNEL GEOMETRY OBTAINED FROM AUTOCAD FILE, HIGHWAY TUNNEL PROFILE 1to1-DEFAULT.dwg PROVIDED BY H.W. LOCHNER.

3. TOP OF ROCK INTERPOLATED BETWEEN BOREHOLES THEN ADJUSTED BASED ON GROUND SURFACE ELEVATION AND BY THE RESISTIVELY PROFILES GENERATED BY SM&E. TOP OF ROCK IS PINNACLED AND WILL VARY ON THE ORDER OF 10 ft. VERTICALLY OVER A FEW FEET HORIZONTALLY.

4. SHADED BOREHOLE INFORMATION IS OBTAINED FROM THE NORTH HORIZONTAL BOREHOLE. THE HORIZONTAL BOREHOLE ELEVATION SHOWN HERE AS A SOLID LINE WITHIN THE SHADED BOREHOLE GRAPHIC TAKES PRECEDENCE OVER OTHER HORIZONTAL BOREHOLE ELEVATION DATA. THE HORIZONTAL BOREHOLE ELEVATION DATA IN THE 2011 SME GDR LOGS IS INCORRECT.

5. THE GEOLOGIC PROFILE AS DEPICTED ILLUSTRATES INTERPRETATION OF THE CONDITIONS AT THE SITE BASED ON THE CONDITIONS AT THE BORING LOCATION, GEOPHYSICAL SURVEY RESULTS, PUBLISHED GEOLOGIC INFORMATION AND JUDGMENT USING ACCEPTED GEOLOGIC, ENGINEERING AND HYDROLOGIC PRINCIPLES. CONDITIONS BETWEEN THE BORING LOCATION MAY VARY SUBSTANTIALLY FROM THOSE SHOWN ON THIS PROFILE. SPECIFIC DATA AT THE BORING LOCATION AND GEOPHYSICAL SURVEY RESULTS ARE PROVIDED IN THE GBR/GDR's.

STATE OF KENTUCKY
MARK R. FUNKHOUSER
24951
LICENSED
PROFESSIONAL ENGINEER
21 JULY 2012

REV	DATE	DES	REVISION DESCRIPTION	CADD	CHK	RVW
1	7/20/12	MRF	SUPPLEMENTED NOTE 4, Q CHANGED TO RMR	JJS	MRF	

50 0 50
SCALE FEET
NO VERTICAL EXAGGERATION

Golder Associates
St. Louis, Missouri

FILE No. Figure 3-10 - Lithologic Profiles
PROJECT No. 113-88401 REV. 0

SCALE	AS SHOWN
DATE	03/12
DESIGN	PJJ
CADD	PJJ
CHECK	JCW
REVIEW	MNH

TITLE
LITHOLOGIC PROFILE NORTHBOUND (4 OF 4)

LOUISVILLE - SOUTHERN INDIANA
OHIO RIVER BRIDGES PROJECT
TWIN HIGHWAY TUNNELS

FIGURE 10

P:\11x-Projects\113884-01 HW Lochner Louisville Tunnel KY\200 Reports\Final GBR 17-July12 Rev1 Internal Draft\DWG\Figure 3-10 - Lithologic Profiles.dwg 7/20/2012 4:31 PM

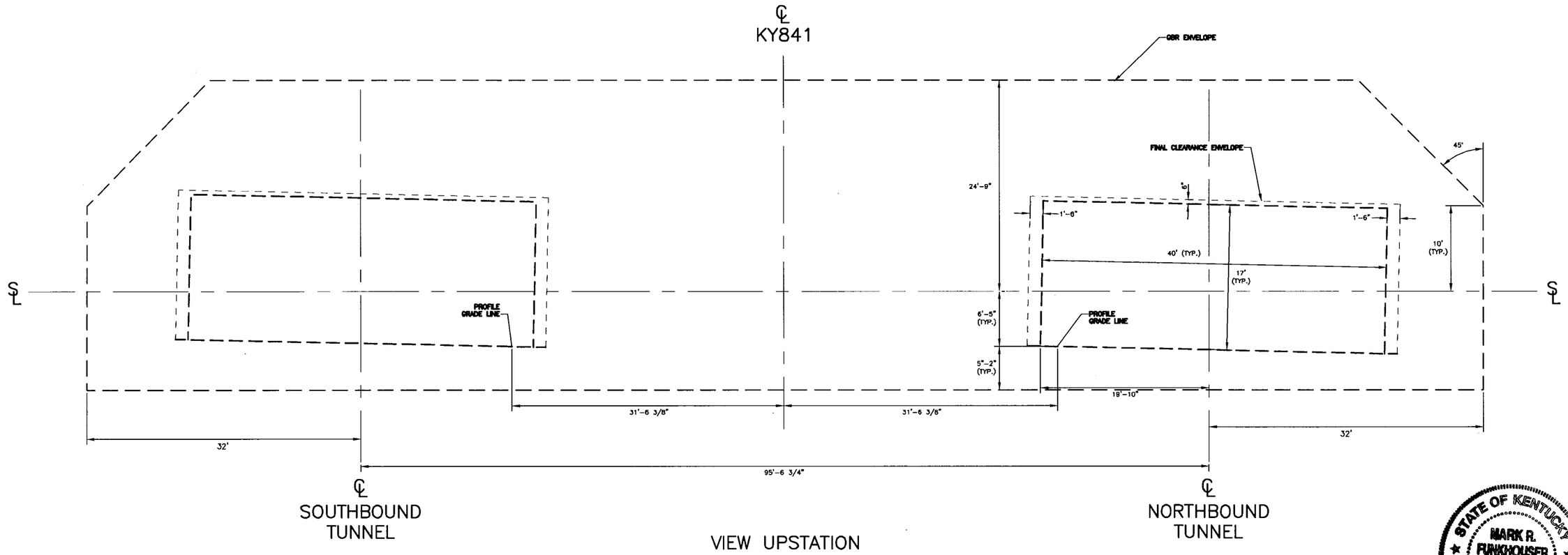

STATE OF KENTUCKY
MARK R. FUNKHOUSER
24851
LICENSED
PROFESSIONAL ENGINEER

17 AUG 2012

NOTES

1. ROAD EXCAVATIONS FOR DRAINAGE INSTALLATION ARE NOT INCLUDED IN THE GBR ENVELOPE.
2. THE DIMENSIONS OF GBR ENVELOPE FOR THE CROSS PASSAGES ARE IDENTICAL TO THE DIMENSIONS SHOWN WHEN MEASURED FROM THE CONTROL LINES OF THE CROSS PASSAGES.
3. PROFILE GRADELINE IS AS SHOWN IN THE REFERENCE DESIGN ROADWAY PROFILE.

REV	DATE	DES	REVISION DESCRIPTION	CADD	CHK	RVW
1	8/17/12	MRF	NEW SECTIONS AND LIMITS	JJS	MRF	JJS

12 0 12
SCALE FEET

Golder Associates
St. Louis, Missouri

FILE No. Figure 11 - GBR Envelope_R1
PROJECT No. 113-88401 REV. 1

SCALE	AS SHOWN
DATE	03/12
DESIGN	PJJ
CADD	JJS
CHECK	JCW
REVIEW	MRF

TITLE
GBR ENVELOPE

LOUISVILLE - SOUTHERN INDIANA
OHIO RIVER BRIDGES PROJECT
TWIN HIGHWAY TUNNELS

FIGURE 11

P:\11x-Projects\113884011 HW Lochner Louisville Tunnel KY280 Reports\Final GBR 17-July12 Rev1 Internal Draft\DWG\Figure 11 - GBR Envelope_R1.dwg 8/17/2012 1:19 PM

Appendix A

Glossary

APPENDIX A

GLOSSARY

This appendix presents the descriptive terms commonly used in describing the ground conditions and the physical characteristics of rock. The descriptions are presented in seven tables as follows:

Table A-1: Descriptive Terms for Soil and Rock Grain Size
Table A-2: Descriptive Terms for Strength of Rock Material
Table A-3: Descriptive Terms for Joint Roughness
Table A-4: Descriptive Terms for Apertures of Rock Discontinuity
Table A-5: Descriptive Terms for Weathering of the Rock Mass
Table A-5: Descriptive Terms for Weathering of the Rock Mass
Table A-6: Descriptive Terms for Fracturing of Rock Mass
Table A-7: Descriptive Terms for Rock Mass Conditions and Excavation Behavior

Table A-1: Descriptive Terms for Soil and Rock Grain Size

Description	Diameter (mm)
Boulders	200 – 600
Cobbles	60 – 200
Coarse gravel	20 – 60
Medium gravel	6 – 20
Fine gravel	2 – 6
Coarse sand	0.6 – 2
Medium sand	0.2 – 0.6
Fine sand	0.06 – 0.2
Silt, clay	<0.06

Table A-2: Descriptive Terms for Strength of Rock Material

Description	Field Identification	Approx. range of maximal compressive strength	
		MPa	psi
Extremely weak	Indented by thumbnail	0.25-1.0	40-145
Very weak	Crumbles under firm blows with point of geological hammer, can be peeled by a pocket knife	1.0-5.0	145-700
Weak	Can be peeled by a pocket knife with difficulty, shallow indentations made by firm blow with point of geological hammer	5.0-25	700-3,600
Medium strong	Cannot be scraped or peeled with a pocket knife specimen, can be fractured with single firm blow of geological hammer	25-50	3,600-7,000
Strong rock	Specimen requires more than one blow of geological hammer to fracture it	50-100	7,000-15,000
Very strong	Specimen requires many blows of geological hammer to fracture it	100-250	15,000-35,000
Extremely strong	Specimen can only be chipped with geological hammer	>250	>35,000

Table A-3: Descriptive Terms for Joint Roughness

Description	Key[1]
Rough (or irregular), stepped	I
Smooth, stepped	II
Slickensided, stepped	III
Rough (or irregular), undulating	IV
Smooth, undulating	V
Slickensided, undulating	VI
Rough (or irregular), planar	VII
Smooth, planar	VIII
Slickensided, planar	IX

1. Keys refer to typical profiles shown on Table 17 of Brown, E.T., "Rock Characterization Testing and Monitoring. ISRM Suggested Methods." Oxford: Pergamon Press. 1981

Table A-4: Descriptive Terms for Apertures of Rock Discontinuity

Description	Aperture (inch)	Category
Very tight	0.004	"Closed" features
Tight	0.004-0.01	
Partly open	0.01-0.02	
Open	0.02-0.1	"Gapped" feature
Moderately wide	0.1-1/4	
Wide	>1/4	
Very wide	¼-4	"Open" features
Extremely wide	4-40	
Cavernous	>40	

Table A-5: Descriptive Terms for Weathering of the Rock Mass

Term	Description
Fresh	No visible sign of rock material weathering: perhaps slight discoloration on major discontinuity surfaces.
Slightly weathered	Discoloration indicates weathering of rock material and discontinuity surfaces. All the rock material may be discolored by weathering and may be somewhat weaker externally than in its fresh condition.
Moderately weathered	Less than half of the rock material is decomposed and/or disintegrated to a soil. Fresh or discolored rock is present either as a continuous framework or as corestones.
Highly weathered	More than half of the rock material is decomposed and or disintegrated to a soil. Fresh or discolored rock is present either as a discontinuous framework or as corestones.
Completely weathered	All rock material is decomposed and/or disintegrated to soil. The original mass structure is still largely intact.
Residual soil	All rock material is converted to soil. The mass structure and material fabric are destroyed. There is a large change in volume, but the soil has not been significantly transported.

Table A-6: Descriptive Terms for Fracturing of Rock Mass

Description	Size Range of Pieces		Remarks
	From	To	
Crushed	~0.5 microns	0.1 ft	Contains clay
Intensely fractured	0.05 ft	0.1 ft	Contains no clay
Closely fractured	0.1 ft	0.5 ft	
Moderately fractured	0.5 ft	1.0 ft	
Little fractured	1.0 ft	3.0 ft	
Massive	3.0 ft and larger		

Table A-7: Descriptive Terms for Rock Mass Conditions and Excavation Behavior (After Bieniwski, 1989)

Term	RMR	Typical Excavation Support for 10m Span Rock Tunnels
Very good	81 – 100	Generally no support required except for spot bolting
Good	61 – 80	Locally, bolts in crown 3m long, spaced 2.5m with occasional wire mesh, 50mm shotcrete in crown where required.
Fair	41 – 60	Systematic bolts 4m long, spaced 1.5-2m in crown and walls with wire mesh in crown. 50-100mm shotcrete in crown and 30mm shotcrete in sides.
Poor	21 – 40	Systematic bolts 4-5m long, spaced 1-1.5m in crown and walls with wire mesh in crown. 100-150mm shotcrete in crown and 100mm shotcrete in sides. Light and medium ribs spaced 1.5m where required.
Very poor	< 20	Systematic bolts 5-6m long, spaced 1-1.5m in crown and walls with wire mesh in crown. Bolt invert. 150-200mm shotcrete in crown, 150mm shotcrete in sides, and 50mm on face. Medium to heavy ribs spaced 0.75m with steel lagging and forepoling if required. Close invert.

THE EAST END CROSSING

(LOUISVILLE-SOUTHERN INDIANA OHIO RIVER BRIDGES PROJECT)

PUBLIC-PRIVATE AGREEMENT

BOOK 2
TECHNICAL PROVISIONS

ATTACHMENT 18-1
UTILITY ADJUSTMENT TYPE MATRIX

(This page intentionally blank.)

Attachment 18-1
East End Crossing - Utility Adjustment Types

Section 6 (Indiana) Utility Company	River Road	Station 244+50	Salem Road	Brook Hollow Subd / Boulder Creek Subd.	Utica Sellersburg	Station 358+00	SR 62 / 265 / Port Road
AT&T - Indiana	Type 1 (April 2013)	n/a	n/a	Type 2	Type 2	n/a	Type 2
ATT - Long Distance	n/a	n/a	n/a	n/a	n/a	n/a	n/a
City of Jeffersonville Wastewater	No Conflict	n/a	Private project (Dec. 2013)	Type 2	n/a	n/a	to be abandoned
Clark Co. REMC	n/a	n/a	No Conflict	Type 3	Type 1	Type 3	No Conflcit
Duke Energy	Type 1 (April 2013)	n/a	No Conflict	Type 3	n/a	Type 3	Type 1 and Type 3
Indiana American Water	n/a	n/a	n/a	n/a	n/a	n/a	Type 2
Level 3 Communications	n/a	n/a	n/a	n/a	Type 2	n/a	Type 2
Insight Communications, IN	Type 1 (April 2013)	n/a	n/a	Type 2	Type 2	n/a	No Conflcit
Vectren - distribution	No Conflict	n/a	n/a	Type 1 (Crystal Springs) and Type 3	Type 3	n/a	n/a
Vectren - transmission	n/a	Type 3	No Conflict	n/a	n/a	n/a	n/a
Watson Rural Water Company	No Conflict	Type 2	No Conflict	Type 2	Type 2	n/a	SR 62: Type 2 Port Road: Type 1 design and order materials (April 2013) and Type 2 Construct

Section 4 (Kentucky) Utility Company	Springdale Road	Wolf Pen Branch Road	US 42	Shadowwood Subdivision	River Road	Transylvania Avenue also Station 186+50 (Lagoon)	Transylvania Beach Road
AT&T - Kentucky	Type 1 set cabinet (June 2013) and Type 3 Relocate	Type 3	Type 1	Type 1 (April 2013)	Type 1 (April 2013)	Type 1 (April 2013)	Type 1 (April 2013)
Insight Communications, KY	Type 2	Type 2	No Conflict	Type 1 (April 2013)	Type 1 (April 2013)	n/a	Type 1 (April 2013)
Level 3 Communications	n/a	n/a	No Conflict	n/a	n/a	n/a	n/a
Louisville Gas and Electric - gas	n/a	Type 1 (April 2013) and Type 3 (KY 841 crossing)	No Conflict	Type 1 (April 2013)	No conflict Protection Req'd	n/a	n/a
Louisville Gas and Electric - electric	Type 1 order poles and Type 3 Construct	Type 1 (April 2013) and Type 3 (KY 841 crossing)	Type 1	Type 1 (April 2013)	Type 1 (April 2013)	Type 1 (April 2013)	Type 1 (April 2013)
Louisville Water Company	Type 1 (Sept. 2013)	Type 1 (Sept. 2013)	No Conflict	Type 2	Type 2	Type 2 (lagoon)	No Conflict
Metropolitan Sewer District	No Conflict	Type 1 (Sept. 2013)	No Conflict	Type 2	No conflict	n/a	No Conflict

n/a = no facilities in the area

No Conflict = facilities in the area, but appear to be clear of construction

= modified since version 4

Type 1 Utility Adjustments –The Utility Owner performs design and construction of the Utility Adjustment and is reimbursed by IFA. The completion schedules are shown in parenthesis .

Type 2 Utility Adjustments –The Utility Owner performs preliminary Utility Adjustment design. Developer performs final Utility Adjustment design and the Utility Adjustment Work using a Contractor(s) acceptable to the Utility Owner.

Type 3 Utility Adjustments – The Utility Owner performs the final design and Utility Adjustment work under the Utility Agreement negotiated by the Developer and is reimbursed by the Developer.

NOTE: The Type descriptions above are abbreviated. For full definition and terms of contract, see TP Section 18-1 and the PPA Exhibit 1

THE EAST END CROSSING

(LOUISVILLE-SOUTHERN INDIANA OHIO RIVER BRIDGES PROJECT)

PUBLIC-PRIVATE AGREEMENT

BOOK 2
TECHNICAL PROVISIONS

ATTACHMENT 21-1
ROW STATUS

(This page intentionally blank.)

ROW Acquisition Status Summary (as of July 27, 2012).

ROW Acquisition Status Summary (As of July 27, 2012)

East End Crossing	Number of Parcels Required	Number of Parcels Acquired	Number of Parcels to be Acquired
Section 4 - KY Approach	106	93	13
Section 6 - IN Approach	42	21	21

ROW Acquisition Status Kentucky Approach – Section 4 (As of July 27, 2012)

Parcel No.	Owner	Anticipated Date Available[1]	Demolition Complete	Right-Of-Way Agreements based on Right-Of-Way Negotiations	
				Reference	Item
3	Arun and Neera Ummat	6/27/2011	N/A		
4	Spring Farm Pointe. LLC c/o R. Stephen Canfield	12/31/2012	N/A	Contract for Easement	• There will be no construction equipment of any type on the easement located to the North of the existing 12' wooden fence. • Any damage to fence or landscaping in the easement will be promptly repaired/restored at the expense of the contractor.
				Other:	• Do Not Remove Wooden Plank Fence.
5	R.F., Jr and Laverne McMahan Estate - c/o Joseph Cohen	7/15/2012	N/A	N/A	N/A
6	David K. Tinnell and Etta Tinnell	12/31/2012	N/A	Contract for Easement	• Developer shall provide and install a temporary fence designed to contain livestock during the construction and remove the fence after Developer has completed construction of permanent fence.
7	Ken and Rosemary Dawson	12/21/2010	N/A	Wolf Pen	• Developer shall not remove landscaping on the

Parcel No.	Owner	Anticipated Date Available[1]	Demolition Complete	Right-Of-Way Agreements based on Right-Of-Way Negotiations	
				Reference	Item
9	Franco R. and Kimberly Rea	12/27/2010	N/A	Woods	property owners' side of the existing stockade fence during fence removal and noise/safety wall construction. KY 841 Sta. 56+44.5 to Sta. 78+15 Rt.
10	Richard K. and Evelyn Kay Rowe	2/23/2011	N/A		
11	Vickie Foley	1/24/2011	N/A		
12	Donald and Robyn Roberts	3/28/2011	N/A		
13	Bruce N. and Vivian E. White	12/17/2010	N/A		
14	Cheryl R. Hancock	12/20/2010	N/A		
15	Vijay V. Kannan	11/23/2011	N/A		
16	R. Kevin Majzoub	9/15/2011	N/A		
17	Richard A. and Hilary B. Catapano	2/24/2011	N/A		
18	Mohammad and Saira Malik	3/1/2011	N/A		
19	Martin and Janice Dunbar	3/1/2011	N/A		
20	Anthony J. and Christy M. Yates	2/28/2011	N/A		
21	Julie M. Welter	2/18/2011	N/A		
22	Kenneth W. and Susan M. McMillan	12/21/2010	N/A		
23	James Lee and Linda Money	12/28/2010	N/A		
24	Avinash and Madhu Goel	1/21/2011	N/A		
25	Stephen T. and Margaret A. Marrillia	3/1/2011	N/A		
26	John G. and Erica Rinehimer	3/1/2011	N/A		
27	John and Sharon Shapanus	1/12/2011	N/A		
28	John T. and Bridget M. Cannon	2/9/2011	N/A		
29	Ryan W. and Sara C. Davis	3/1/2011	N/A		
30	Dwayne Elisco Sr. and Julianna Able	7/5/2011	N/A	N/A	N/A
31	August James and Margaret Anne Pisa	3/1/2011	N/A	Other	• Developer shall not remove wooden fence.
32	Joy Ann Adams	8/18/2011	N/A	N/A	N/A
33	Wolf Pen Woods Comm Assoc.,	3/7/2011	N/A	Other	• For the formal entrance and trees adjacent to the

Parcel No.	Owner	Anticipated Date Available[1]	Demolition Complete	Right-Of-Way Agreements based on Right-Of-Way Negotiations	
				Reference	Item
	Inc.				entrance and parallel to Wolf Pen Branch Road, Developer shall not disturb formal entrance wall and 2nd row of trees.
37	Donald F. and Zita M. Coffey	3/7/2011	N/A	Contract for Easement	• The driveway at 7200 Springdale Rd. that is impacted with the construction of Springdale Rd. shall be replaced with concrete to the limits of the easement.
38	Donald L. and Paula A. Embry	6/15/2011	N/A	N/A	N/A
39	Samuel and Marlene O. Gordon	4/29/2011	In IR-35204	N/A	N/A
40	Stephen P. and Margaret A. Hanson	8/31/2011	N/A	N/A	N/A
41	Michael J. Bodi and Diane D.	3/7/2011	N/A	N/A	N/A
43	William H. Parrott, Jr. and Kassy A. Parrott	5/16/2011	N/A	N/A	N/A
47	D. Scott and Denise A. McClinton	3/13/2012	N/A	Contract for Easement	• The said temporary easement is valid for a two year period beginning with the commencement of road construction adjacent to the property.
48	Bridgepointe Swim and Tennis Club, Inc.	6/10/2011	N/A	MOU	• Any property that is disturbed within the proposed easements shall be restored to as good a condition or better than when the construction began. All areas of disturbance shall be graded and restored with clean dirt free of any rock and/or debris then sodded. As shown on the approved Right of Way plans, the private drive (pavement, curb and gutter, that accesses the Club's parking area) shall be reconstructed to match the grades of the proposed Wolf Pen Branch Road.
49	Carney Wolf Pen, LLC	3/31/2013	N/A	N/A	N/A
50	The Harbor at Harrods Creek, Inc.	3/31/2013	In IR-35204	N/A	N/A
51	David R. Jr. and Penny C. Deatrick	8/31/2012	N/A	N/A	N/A
52	Gary D. and Renee M. Charman	7/5/2011	N/A	N/A	N/A

Parcel No.	Owner	Anticipated Date Available[1]	Demolition Complete	Right-Of-Way Agreements based on Right-Of-Way Negotiations	
				Reference	Item
53	John C. and Donna A. Meyer	2/23/2012	N/A	Contract for Easement	• Owner shall be allowed to move woodpile of firewood and compost pile off parcel. • Developer shall allow removal of items stored in playhouse.
54	Jerry Yu and Jing Juan Zheng	3/31/2013	N/A	N/A	N/A
55	Dale A. and Susan L. McConkey	5/13/2011	N/A	N/A	N/A
57	David W. Schwytzer and Andrea Kristofy	12/31/2012	N/A	N/A	N/A
58	Saleem and Sara L. Seyal	3/31/2013	N/A	N/A	N/A
59	Byron Judson, III and Kimberly Sue Grimes	5/13/2011	N/A	N/A	N/A
60	Brent L. and Diana L. Nemec	3/31/2013	N/A	N/A	N/A
66	Soterion Corporation	4/30/2012	Do Not Disturb	Other	• A Preservation Easement has been placed covering the entire property. • A Permanent Easement has been placed covering the area of the tunnels.
				KYTC Rental Agreement	• KYTC has given the former owners permission to rent and occupy the residence.
68	Margaret E. Keane	12/1/2009	Yes	N/A	N/A
69	Robert N. and Ivy Barash Mann	6/18/2010	Yes	N/A	N/A
70	Sandra Waterbury Hobbs (Married)	2/7/2011	Yes	N/A	N/A
71	Joseph Michael and Penny Joyce Fleitz	3/31/2013	In IR-35204	N/A	N/A
72	Kent Risen and Karen M. Deckard	5/13/2011	N/A	N/A	N/A
73	Kay O. Harper (Married)	9/23/2010	Yes	N/A	N/A
74	Mary Shaver and M. Samantha Shaver	11/22/2010	Yes	N/A	N/A
75	Bruce G. and Deborah V. Thomas	4/5/2007	In Parcel 50	N/A	N/A
76	John Eger, Jr. and Joan C. Eger & Christopher Eger	3/16/2009	In Parcel 50	N/A	N/A

Parcel No.	Owner	Anticipated Date Available[1]	Demolition Complete	Right-Of-Way Agreements based on Right-Of-Way Negotiations	
				Reference	Item
77	Ralph H. Shawler Revocable Living Trust	5/1/2006	In Parcel 50	N/A	N/A
78	G. Scott Tallent and Paula L. Collins	5/21/2009	In Parcel 50	N/A	N/A
79	Jack D. Wood	11/13/2009	In Parcel 50	N/A	N/A
80	Thomas L. Forshee	4/5/2007	In Parcel 50	N/A	N/A
81	Adrienne Byer	8/27/2010	In Parcel 50	N/A	N/A
82	Wayne R. and Sherry D. Schneider	9/23/2010	In Parcel 50	N/A	N/A
83	Lewis Dan	8/27/2010	In Parcel 50	N/A	N/A
84	John K. Krull	8/30/2010	In Parcel 50	N/A	N/A
85	Janet Marie Drayer Trust	10/14/2010	Yes	N/A	N/A
86	Charles L., Jr. and Donna J. Davis	10/13/2010	Yes	N/A	N/A
87	Kent W. and Gwen H. Killion	12/17/2010	Yes	N/A	N/A
88	Henry T., Jr. and Elisabeth B. Riggs	10/27/2010	Yes	N/A	N/A
89	Elizabeth Ullmer Mendel	9/15/2008	Yes	N/A	N/A
90	Mary K. Pitchford	5/6/2011	Yes	N/A	N/A
95	Wilson McGruder	3/31/2013	N/A	N/A	N/A
97	Cathy Dumstorf, Shari Fox, Cindy Dumstorf & James Dumstorf	7/13/2011	N/A	N/A	N/A
98	Gary S. and Helen Kay Tronzo	7/26/2012	In IR-35204	N/A	N/A
100	David and Sue Baughman	7/31/2009	Do Not Disturb	N/A	N/A
101	Ian S. and Denise A. Kalina	8/27/2010	Yes	N/A	N/A
102	Allen and Madonna Gammel	3/1/2011	Yes	N/A	N/A
103	Regina H. Schmidt	6/17/2011	Yes	N/A	N/A
104	Robert G. Jacoby Trust & Pauline R. Jacoby Trust	8/10/2010	Yes	N/A	N/A
105	Kyle J. Broyles, III and David M. Hardesty	2/18/2011	Do Not Disturb	MOU	• The said temporary easement is valid for a two year period beginning with the commencement of

Parcel No.	Owner	Anticipated Date Available[1]	Demolition Complete	Right-Of-Way Agreements based on Right-Of-Way Negotiations	
				Reference	Item
					road construction adjacent to the property.
107	Frank L. and Ann H. Brooks	8/10/2010	Yes	N/A	N/A
108	Bruce M. Heiman and Jo Elaine Beaty	10/13/2010	Yes	N/A	N/A
110	Virginia Ruth Rauh	3/31/2013	N/A	N/A	N/A
112	Michael J. and E. Jean McCann	8/29/2007	Yes	N/A	N/A
113	Charles E. and Rita G. Smith	5/4/2011	N/A	N/A	N/A
114	Beverly Jean Stewart and Linda Gayle Stewart	7/7/2009	Yes	N/A	N/A
115	Ann M. Hughes Real Estate #1 LTD	3/31/2013	In IR-35204	N/A	N/A
117	J. Michael Fleitz	3/31/2013	N/A	N/A	N/A
118	Paul and Joan Y. Casi	3/31/2011	In IR-35204	N/A	N/A
119	Robert H. Rice, Sr. and Paula L. Rice	2/1/2012	N/A	N/A	N/A
120	James Donald and Shana Hunt Vandertoll	3/31/2013	N/A	N/A	N/A
121	Harrods Creek Land Management Association LTD.	3/31/2013	N/A	N/A	N/A
122	Pete and Amy Hanekamp	6/18/2009	In IR-35204	N/A	N/A
123	David M. and Rebecca H. Will	9/17/2009	In IR-35204	N/A	N/A
125	Jacqueline H. Evans	12/31/2012	In IR-35204	KYTC Rental Agreement	• KYTC has given the former owners permission to rent and occupy the residence until December 31, 2012.
126	Louis F. and Paulette L. Breit	3/27/2011	N/A	N/A	N/A
127	City of Louisville/Louisville Water Company	12/31/2012	N/A	N/A	N/A
128	Stan and Mary Beth Moore	8/31/2012	Do Not Disturb	N/A	N/A
129	Roger Lenkoff	9/20/2010	N/A	N/A	N/A
130	Robert T. and Margaret G. Liter	10/18/2010	Yes	N/A	N/A

Parcel No.	Owner	Anticipated Date Available[1]	Demolition Complete	Right-Of-Way Agreements based on Right-Of-Way Negotiations	
				Reference	Item
131	John L. Long	11/8/2010	Yes	N/A	N/A
132	Julie Vatter	9/29/2010	N/A	N/A	N/A
133	Erwin F. Hartmann	9/16/2010	N/A	N/A	N/A
136	James C. and Gloria Carpenter	9/16/2010	N/A	N/A	N/A

Notes:
Anticipated date that the parcel will be made available for the Developers use.

ROW Acquisition Status Indiana Approach – Section 6 (As of July 27, 2012)

Parcel No.	Owner	Anticipated Date Available[1]	Demolition Complete	Right-Of-Way Agreements based on Right-Of-Way Negotiations	
				Reference	Item
1	LPI Investors	2/1/2005	N/A		
2	Moore (Lime Kiln)	4/1/2013	In IR-35205		
3	Gilmore Construction Inc.	12/1/2008	In IR-35205		
5	Brown, Gregory	8/1/2008	In IR-35205		
6	Harlow, Forrest & Sandra	6/1/2013	In IR-35205		
7	Morrow, Dan & Sara	7/1/2010	In IR-35205		
8	Gilmore, Laura	12/1/2012	In IR-35205		8-29-12 ROE obtained
9	Duncan, Gary & Deborah	10/1/2009	In IR-35205		
10	Nethery, Garrie W. Jr.	8/1/2009	In IR-35205		
11	Case, Todd & Barbara	2/1/2010	In IR-35205		
12	Dwelly, Erik	6/1/2013	In IR-35205		
13	Dooley, James & Theresa	4/1/2013	In IR-35205		
14	Brookhollow Development	12/1/2008	N/A		
15	Meyer, Dennis	6/1/2013	N/A		
16	Beech, Annamarie	5/1/2010	In IR-35205		
17	Seebold, John & Corinne	7/1/2010	In IR-35205		
18	Chumbley, Kenneth	6/1/2013	N/A		
19	Fasenbyer, Larry L.	1/1/2004	N/A		
20	Mudoch, Steven & Terri	7/1/2009	In IR-35205		
21	Gilmore, Gary D.	12/1/2008	N/A		
22	Spellman, Kelle & Anthony	4/1/2013	In IR-35205		
23	Barrett Trust/ Goobrath	6/1/2013	N/A		
25	James, Mark & Jacqueline	11/1/2012	In IR-35205		
26	James, Lee & Linda	11/1/2012	N/A		
27	Myers, Richard M. Jr.	4/1/2013	N/A		
28	Cooper, Mary	4/1/2013	N/A		
29	Schaaf, Alfred & Romilda	12/1/2012	N/A		8-29-12 ROE obtained

Parcel No.	Owner	Anticipated Date Available[1]	Demolition Complete	Right-Of-Way Agreements based on Right-Of-Way Negotiations	
				Reference	Item
30	Schlosser Partnership	12/1/2008	N/A		
31	Ward, Beverly	9/1/2010	In IR-35205		
32	Ward, Beverly & Ward, Pat	1/1/2013	In IR-35205	Amended MOA	• Central Passage House is advertised for relocation of the building.
34	No Moore, Inc.	4/1/2013	N/A		
38	Bagwshaw, Edward & Bonny	6/1/2013	N/A		
39	Brothers, Thomas L. Jr.	6/1/2013	N/A		
42	Libs, Richard L. & Elizabeth	12/1/2012	N/A		
47	T.J. Mark LLC	11/15/2012	N/A		
48	Cooper, Tony Wayne Sr.	4/1/2013	N/A		8-29-12 ROE obtained
50	Hughes	6/1/2013	N/A		
56	Paradowski, Brian	4/1/2013	N/A		
57	Apple 5 LLC	4/1/2013	N/A		
58	Reschar, Jacky	6/1/2013	N/A		
60	Boulder Creek	6/1/2013	In IR-35205		
62	Bagshaw, Edward	6/1/2013	N/A		

Notes:
1. Anticipated date that the parcel will be made available for the Developers use.

THE EAST END CROSSING

(LOUISVILLE-SOUTHERN INDIANA OHIO RIVER BRIDGES PROJECT)

PUBLIC-PRIVATE AGREEMENT

BOOK 2
TECHNICAL PROVISIONS

ATTACHMENT 22-1
PERFORMANCE AND MEASUREMENT TABLE

(This page intentionally blank.)

Table 22-1 Performance and Measurement Table

Element Category			Performance Requirement	Response to Defects			Inspection and Measurement Method*	Measurement Record*	Target
				Category 1		Cat. 2			
	Ref	Element		Hazard Mit.	Perm. Remedy	Perm. Repair			
1) ROADWAY									
	1.1	Obstructions and debris	Roadway and clear zone free from obstructions and debris	2 hrs	N/A	N/A	Visual Inspection	Number of obstructions and debris	Nil
	1.2	Pavement - Rigid	All roadways have a smooth surface course (including bridge decks, covers, gratings, frames and boxes) with adequate skid resistance and free from Defects.	N/A	N/A	8 mo.	**a) Cracks** Automated condition distress survey.	Total number of slabs per lane mile with any combination of longitudinal, transverse, or corner breaks. Cracks greater than 0.50 inches wide with spalling up to 2 inches wide. Intersecting random cracks with a pattern that divides the slab into three or more segments. Unsealed cracks greater than 0.125 inches.	<10 Nil Nil Nil
				N/A	N/A	8 mo.	**b) Corner Breaks** Visual inspection.	Corner breaks with more than 0.50 inch drop off.	Nil
				24 hrs	28 days	8 mo.	**c) Localized deficiencies** Physical measurement.	Wheel path and non-wheel path, localized deficiencies such as spalling, pop outs, scaling greater than 2 inches wide, or to a depth of 0.5 inch, or greater than 6 inches long.	Nil
				24 hrs	28 days	8 mo.	**d) Faulting** Automated condition distress survey.	Faulting that causes an elevation change across joints or cracks greater than 0.325 inches.	Nil
				7 days	28 days	8 mo.	**e) Lane to Shoulder Drop-Off**	Instances of edge drop-off	Nil

Element Category			Performance Requirement	Response to Defects			Inspection and Measurement Method*	Measurement Record*	Target
				Category 1		Cat. 2			
	Ref	Element		Hazard Mit.	Perm. Remedy	Perm. Repair			
							Physical measurement.	greater than 1" for a continuous length of 18 feet or in aggregate more than 2 percent of total shoulder length. (Number)	
				N/A	N/A	8 mo.	**f) Roadway Smoothness** (excluding shoulders and gores) Measurement of International Roughness Index (IRI) shall meet the requirements in the FHWA Highway Performance Monitoring System (HPMS) Field Manual.	Meet Table 22-2 IRI Requirements	100%
				N/A	N/A	8 mo.	**g) Skid resistance** (excluding gores) ASTM E274 and a smooth tire in accordance with ASTM E524 at 40 MPH using a full scale smooth tire meeting the requirements of ASTM E 524. A minimum of 11 equally spaced tests shall be performed in each 0.25 mile segment of each lane and averaged to obtain the average test value for each 0.25 mile segment.	The average test value for any 0.25 mile segment of any lane less than 35, and any single test value less than 25.	Nil
	1.2 cont		Road users warned of potential skidding hazards	24 hrs	7 days	N/A	**Skid resistance** (as above)	Instances where road users warned of potential skidding hazard where remedial action is identified.	100%
	1.3	Pavement - Flexible	All roadways have a smooth surface course (including bridge decks, covers, gratings, frames and boxes) with adequate skid resistance and free from Defects.	N/A	N/A	8 mo.	**a) Cracks** Automated condition distress survey.	Cracks greater than 0.25 inches wide over a continuous length of 6 feet or greater. Unsealed cracks greater than 0.125 inches.	Nil Nil
				24 hrs	28 days	8 mo.	**b) Potholes**	Potholes greater than 0.5	Nil

Element Category			Performance Requirement	Response to Defects			Inspection and Measurement Method*	Measurement Record*	Target
				Category 1		Cat. 2			
	Ref	Element		Hazard Mit.	Perm. Remedy	Perm. Repair			
							Visual inspection.	square feet in area and 1 inch in depth.	
				N/A	N/A	8 mo.	**c) Shoving** Physical measurement.	Shoved areas exceeding 20 square feet.	Nil
				N/A	N/A	8 mo.	**d) Rutting** Automated condition distress survey. ASTM E950. Measurements of localized areas shall be carried out using a 6 foot straight edge in accordance with ASTM E1707.	Rutting depth exceeding 0. 25 inches average per lane-mile section, 0.375 inches average per 300 foot section and any instance greater than 0.500 inches	Nil
				24 hrs	28 days	8 mo.	**e) Depression or Bump** Physical measurement.	Depression or bump exceeding 0.5 inches for any area greater than 1 square foot. No single measurement shall exceed 1 inch.	Nil Nil
				7 days	28 days	8 mo.	**f) Lane to Shoulder Drop-Off** Physical measurement.	Instances of edge drop-off greater than 1 inch for a continuous length of 18 feet or in aggregate more than 2 percent of total shoulder length. (Number)	Nil
				N/A	N/A	8 mo.	**g) Roadway Smoothness** (excluding shoulders and gores) Measurement of International Roughness Index (IRI) shall meet the requirements in the FHWA Highway Performance Monitoring System (HPMS) Field Manual.	Meet Table 22–2 IRI Requirements.	100%
				N/A	N/A	8 mo.	**h) Skid resistance** (excluding shoulders and gores) ASTM E274 and a smooth tire in	The average test value for any 0.25 mile segment of any lane less than 35, and any single test	Nil

Element Category			Performance Requirement	Response to Defects			Inspection and Measurement Method*	Measurement Record*	Target
				Category 1		Cat. 2			
	Ref	Element		Hazard Mit.	Perm. Remedy	Perm. Repair			
							accordance with ASTM E524 at 40 MPH using a full scale smooth tire meeting the requirements of ASTM E 524. A minimum of 11 equally spaced tests shall be performed in each 0.25 mile segment of each lane and averaged to obtain the average test value for each 0.25 mile segment.	value less than 25.	
			Road users warned of potential skidding hazards	24hrs	7days	N/A	**Skid resistance** (as above)	Instances where road users warned of potential skidding hazard where remedial action is identified.	100%
	1.4	Reserved							
	1.5	Joints in concrete	Joints in concrete paving are sealed and watertight Longitudinal joint separation	24 hrs	28 days	8 mo.	Visual inspection of joints Measurement of joint width and level difference of two sides of joints	Length of individual unsealed joints greater than 3-feet in any 12-foot length Joint width more than 1 inch or faulting more than 0.25 inches	Nil Nil
	1.6	Curbs	Curbs are free of defects	7 days	28 days	8 mo.	Visual inspection	Length out of alignment (0.5 inch in 10 feet)	Nil
2) DRAINAGE									
	2.1	Pipes and Channels	Each element of the drainage system is maintained in its proper function by cleaning, clearing and/or emptying as appropriate from the point at which water drains from the travel way to the outfall or drainage way.	24 hrs	7 days	6 mo.	Visual inspection supplemented by CCTV where required to inspect buried pipe work	Length with less than 90% of cross section clear (feet)	Nil

Element Category			Performance Requirement	Response to Defects			Inspection and Measurement Method*	Measurement Record*	Target
				Category 1		Cat. 2			
	Ref	Element		Hazard Mit.	Perm. Remedy	Perm. Repair			
	2.2	Drainage treatment devices	Drainage treatment and balancing systems, flow and spillage control devices function correctly and their location and means of operation is recorded adequately to permit their correct operation in Emergency.	24 hrs	7 days	6 mo.	Visual inspection	Devices functioning correctly with means of operation displayed (Number)	100%
	2.3	Travel Way	Water does not encroach on the travel way to the extent that such water would represent a hazard by virtue of its position and depth.	24 hrs	7 days	6 mo.	Visual inspection of water on surface	Instances of hazardous water build-up	Nil
	2.4	Discharge systems	Surface water discharge systems perform their proper function and discharge to groundwater and waterways complies with the relevant legislation and permits.	24 hrs	7 days	6 mo.	Visual inspection and records	Non-compliances with Project Standards and regulations	Nil
	2.5	Underdrains	Underdrain pipes and outlets in a fully functioning condition to maintain the design drainage flow.	24 hrs	7 days	6 mo.	Visual inspection.	Devices functioning correctly (number)	100%
	2.6	Protected Species	Named species and habitats are protected.	24 hrs	28 days	6 mo.	Visual inspection	Compliance with the contract requirements	100%
3) STRUCTURES									
	3.1	Structures having an opening measured along the	Substructures and superstructures are free of: • undesirable vegetation • debris and bird droppings	 N/A N/A	 90 days 90 days	 8 mo. 8 mo.	Inspection and assessment in accordance with the requirements of federal National Bridge Inspection Standards (NBIS) of the Code of Federal Regulations,	Records as required in the Department Bridge Inspection Manual All condition states to be one for	100% 100%

Element Category			Performance Requirement	Response to Defects			Inspection and Measurement Method*	Measurement Record*	Target
				Category 1		Cat. 2			
	Ref	Element		Hazard Mit.	Perm. Remedy	Perm. Repair			
		centre of the roadway of more than 20 feet between undercopings of abutments or springlines of arches or extreme ends of openings or multiple boxes	• blocked drains, weep pipes manholes and chambers	24 hrs	28 days	8 mo.	23 Highways – Part 650, the Department Bridge Inspection Manual, and the Federal Administration's Bridge Inspector's Reference Manual.	all structure components	
			• blocked drainage holes in structural components	24 hr	28 days	8 mo.		Longitudinal or transverse deck cracks greater than 0.1 inches for a continuous length of 4 feet or greater.	Nil
			• defects in joint sealants	N/A	28 days	8 mo.			
			• defects in pedestrian protection measure	24 hrs	28 days	8 mo.		Spalling greater than 2 square feet.	Nil
			• scour damage	24 hrs	28 days	8 mo.		Defects in protective coating greater than 3 square feet in any location or greater than 5% of overall coating area per structural member.	Nil
			• corrosion of rebar	N/A	N/A	8 mo.			
			• deck and wearing surface defects	24 hrs	28 days	8 mo.			
			Maintain substructure settlement within specified requirements.	N/A	28 days	8 mo.	Physical measurement with straight edge.	Post-construction settlement of bridge piers and abutments: Less than 1-inch total settlement and less than 0.5 inch differential between adjacent piers or abutments.	Nil
								Differential settlement of bridge approach slabs: Less than 1-inch total settlement and less than 0.5 inch differential between end of approach slabs.	Nil

Element Category			Performance Requirement	Response to Defects			Inspection and Measurement Method*	Measurement Record*	Target
				Category 1		Cat. 2			
	Ref	Element		Hazard Mit.	Perm. Remedy	Perm. Repair			
			Maintain condition rating.	24 hrs	3 mo.	8 mo.	Inspection and assessment in accordance with the requirements of federal National Bridge Inspection Standards (NBIS) of the Code of Federal Regulations, 23 Highways – Part 650, the Department Bridge Inspection Manual, and the Federal Administration's Bridge Inspector's Reference Manual.	Maintain a condition rating no lower than 6 for any individual element for each structure. Maintain an overall condition rating no lower than 6 for each structure.	100% 100%
	3.2	East End Bridge	Bridge deck and wearing surface free of defects.	24 hrs	3 mo.	8 mo.	Visual inspection and physical measurement.	Longitudinal or transverse cracks. Spalling that extends into the structural deck. Spalling greater than 1 square foot.	Nil Nil Nil
	3.3	Structure components	i) Expansion joints are free of: • dirt debris and vegetation • defects in drainage systems • loose nuts and bolts • defects in gaskets ii) The deck drainage system is free of all obstructions and operates as intended.	7 days 24 hrs	3 mo.	8 mo.	Inspection and assessment in accordance with the requirements of federal National Bridge Inspection Standards (NBIS) of the Code of Federal Regulations, 23 Highways – Part 650, the Department Bridge Inspection Manual, and the Federal Administration's Bridge Inspector's Reference Manual.	Records as required in the Department Bridge Inspection Manual Occurrences of condition rating below seven for any deck, superstructure or substructure All condition states to be one for all structure components	100% Nil 100%

Element Category			Performance Requirement	Response to Defects			Inspection and Measurement Method*	Measurement Record*	Target
				Category 1		Cat. 2			
	Ref	Element		Hazard Mit.	Perm. Remedy	Perm. Repair			
			iii) Parapets are free of: • loose nuts or bolts • blockages of hollow section drain holes • graffiti • vegetation • accident damage	24 hrs					
			iv) Railings and Parapets are functioning as intended.	24 hrs					
			v) Bearings and bearing shelves are clean.	7 days					
			vi) Bridge bearing are functioning within their original design parameters to ensure satisfactory performance. Additional advice contained in bearing manufacturers' instructions	7 days					
			vii) Barrier railings are maintained in a structurally sound manner to function as intended.	24 hrs					
	3.4	Non-bridge class culverts	Non-bridge-class culverts are free of: • Any combination of vegetation, debris or silt causing >10% loss in cross-section of the structure • defects in sealant to movement joints • scour damage	24 hrs	28 days	6 mo.	Visual inspection	Number with vegetation, debris or silt > 10% of design opening not including the sump where applicable Number with defects in sealant and movement joints Number with scour damage	Nil Nil Nil

Element Category			Performance Requirement	Response to Defects			Inspection and Measurement Method*	Measurement Record*	Target
				Category 1		Cat. 2			
	Ref	Element		Hazard Mit.	Perm. Remedy	Perm. Repair			
	3.5	Gantries and high masts	Sign signal gantries, high masts are structurally sound and free of: • loose nuts and bolts • defects in surface protection systems • graffiti *Hazard Mitigation response 48 hrs in inclement weather	24 hrs* 48 hrs 72 hrs	3 mo.	9 mo.	Visual inspection	Number with loose assemblies Number with defects in surface protection Number with graffiti	Nil Nil Nil
	3.6	Load ratings	All structures maintain the design load capacity.	24 hrs	3 mo.	9 mo.	Inspection and assessment in accordance with the requirements of AASHTO's Guide Manual for Condition Evaluation and Load and Resistance Factor Rating (LRFR) of Highway Bridges, the TxDOT Bridge inspection Manual, and the Federal Administration's Bridge Inspector's Reference Manual.	Number of load restrictions for Indiana and/or Kentucky legal loads (including legally permitted vehicles)	Nil
	3.7	Surface coating	Include a re-coating schedule in the MP.	N/A	N/A	1 year	Visual inspection of surface condition	Greater than 20% of surface area is rusted, flaking or has delaminated coating by visual inspection.	Nil
	3.8	Structural assessment	Evaluate structural damage to structures and liaise with emergency services to assure safe working in clearing the Incident, safety for traffic and adequate structural capacity.	24 hrs	28 days	N/A	Inspections and surveys as required by incident	Incident reports showing compliance	100%

Element Category			Performance Requirement	Response to Defects			Inspection and Measurement Method*	Measurement Record*	Target
				Category 1		Cat. 2			
	Ref	Element		Hazard Mit.	Perm. Remedy	Perm. Repair			
	3.9	Graffiti	Graffiti is removed in a manner and using materials that restore the surface to a like appearance similar to adjoining surfaces.	N/A	3 mo.	N/A	All graffiti is considered a Category 1 Defect	Inspection records showing compliance	100%
	3.10	Permit Load Analysis	Analyze and respond to permit load request.	N/A	N/A	7 days		Analyze and respond to Indiana Department of Revenue, Motor Carrier Services Division in 7 days.	100%
	3.11	Structure Monitoring	Maintain the approved structure monitoring devices.	N/A	N/A	30 days		Monitoring records showing compliance.	100%
4) PAVEMENT MARKINGS, OBJECT MARKERS, BARRIER MARKERS AND DELINEATORS									
	4.1	Pavement markings & symbols	Pavement markings and symbols are: • clean and visible during the day and at night • whole and complete and of the correct color, type, width and length • placed to meet the MUTCD	24 hrs	28 days	9 mo.	As specified in Standard Specification 808.07 and Indiana Test Method (ITM) 931. Physical measurement	90% of length meeting retained retro-reflectivity reading specified in Standard Specification 808.07 from May 1 to November 30 Length with more than 5% loss of area of material at any point Length with spread more than 10% of specified dimensions Length performing its intended function and compliant with relevant regulations Pavement symbols with 90% of each symbol functioning as intended	100% Nil Nil 100% 100%
	4.2	Delineators	Markers and delineators	7 days	28 days	9 mo.	Visual inspection	Number of object markers or	Nil

Element Category			Performance Requirement	Response to Defects			Inspection and Measurement Method*	Measurement Record*	Target
				Category 1		Cat. 2			
	Ref	Element		Hazard Mit.	Perm. Remedy	Perm. Repair			
		& Markers	are: • clean and visible • of the correct color and type • legible and reflective • straight and vertical					delineators defective or missing	
5) GUARDRAILS, SAFETY BARRIERS AND IMPACT ATTENUATORS									
	5.1	Guard rails and safety	All guardrails, safety barriers, concrete barriers, etc.) are maintained free of Defects. They are appropriately placed and correctly installed at the correct height and distance from roadway or obstacles.	24 hrs	7 days	9 mo.	Visual inspection	Length of road restraint systems correctly installed Length free from defects Length at correct height Length at correct distance from roadway and obstacle	100% 100% 100% 100%
6) TRAFFIC SIGNS									
	6.1	Regulatory Signs	i) Signs are clean, correctly located, clearly visible, legible, reflective, at the correct height and free from structural and electrical defects ii) Identification markers are provided, correctly located, visible, clean and legible iii) Sign mounting posts are vertical, structurally sound and rust free iv) All break-away sign mounts are clear of silt or other debris that could	2 hrs	7 days	9 mo.	**a) Retroreflectivity** Coefficient of retro reflectivity **b) Face damage** Visual inspection **c) Placement** Visual inspection **d) Obsolete signs** Visual inspection **e) Sign Information** Visual inspection	Number of signs with reflectivity below the requirements of MUTCD Number of signs with face damage greater than 5% of area Signs placed in accordance with Project Standards including not twisted or leaning Number of obsolete signs Sign information is of the correct size, location, type and wording to meet its intended purpose	Nil Nil 100% Nil 100%

Element Category			Performance Requirement	Response to Defects			Inspection and Measurement Method*	Measurement Record*	Target
				Category 1		Cat. 2			
	Ref	Element		Hazard Mit.	Perm. Remedy	Perm. Repair			
			impede break-away features and shall have correct stub heights v) Obsolete and redundant signs are removed or replaced as appropriate vi) Visibility distances meet the stated requirements vii) Sign information is of the correct size, location, type and wording to meet its intended purpose and any statutory requirements viii) All structures and elements of the signing system are kept clean and free from debris and have clear access provided. ix) All replacement and repair materials and equipment are in accordance with the requirements of the MUTCD						
	6.2	Non-Regulatory Signs	Requirements of 6.1	7 days	28 days	9 mo.	Visual inspection	Number of damaged safety critical signs	Nil
7) TRAFFIC SIGNALS									
	7.1	General	i) Traffic Signals and their associated equipment are: • clean and visible	2 hrs	24 hrs	6 mo.	**a) General condition** Visual inspection	Signals are clean and visible	100%

Element Category			Performance Requirement	Response to Defects			Inspection and Measurement Method*	Measurement Record*	Target
				Category 1		Cat. 2			
	Ref	Element		Hazard Mit.	Perm. Remedy	Perm. Repair			
			• correctly aligned and operational • free from damage caused by accident or vandalism • correctly aligned and operational ii) Signal timing and operation is correct iii) Contingency plans are in place to rectify Category 1 defects not immediately repairable to assure alternative traffic control is provided during a period of failure				**b) Damage** Visual inspection **c) Signal timing** Timed measurements **d) Contingency plans** Records Review	Signals are undamaged Installations have correct signal timings Full contingency plans are in place	100% 100% 100%
	7.2	Soundness	Traffic Signals are structurally and electrically sound	24 hrs	28 days	6 mo.	a) Structural soundness Visual inspection b) Electrical soundness Testing to meet NEC regulations	Inspection records showing safe installation and maintenance	100%
	7.3	Identification marking	Signals have identification markers and the telephone number for reporting faults are correctly located, clearly visible, clean and legible	N/A	28 days	6 mo.	Visual inspection	Inspection records showing identification markers and other information are easily readable	100%
8) LIGHTING									
	8.1	Roadway Lighting – General	i) Lighting is free from defects and provides acceptable uniform lighting quality ii) Lanterns are clean and	24 hrs	28 days	6 mo.	**a) Mainline lights operable** Night time inspection or automated logs **b) Mainline lights out of action**	Less than 90% of lights functioning correctly at all times Instances of more than two consecutive lights not functioning	Nil Nil

Element Category			Performance Requirement	Response to Defects			Inspection and Measurement Method*	Measurement Record*	Target
				Category 1		Cat. 2			
	Ref	Element		Hazard Mit.	Perm. Remedy	Perm. Repair			
			correctly positioned iii) Lighting units are free from accidental damage or vandalism iv) Columns are upright, correctly founded, visually acceptable and structurally sound				Night time inspection or automated logs		
	8.2	Sign Lighting	Sign lighting is fully operational	24 hrs	28 days	6 mo.	Night time inspection or automated logs	Instances of more than one bulb per sign not working	Nil
	8.3	Electrical Supply	Electricity supply, feeder pillars, cabinets, switches and fittings are electrically, mechanically and structurally sound and functioning	24 hrs	7 days	1 mo.	Testing to meet NEC regulations, visual inspection	Inspection records showing safe installation and maintenance	100%
	8.5	High Mast Lighting	i) High mast luminaries functioning on each pole ii) All obstruction lights are present and working (if required) iii) Compartment door is secure with all bolts in place iv) All winch and safety equipment is correctly functioning and maintained without rusting or corrosion (for structural requirements refer to Element Category 3)	24 hrs	48 hrs	1 mo.	Yearly inspection and night time inspections or automated logs	Instances of two or more lamps not working per high mast pole Identification of other defects	Nil Nil
	8.6	Navigation	Navigation lights on East	24 hrs	48 hrs	28	Weekly visual inspection	No outages	100%

Element Category			Performance Requirement	Response to Defects			Inspection and Measurement Method*	Measurement Record*	Target
				Category 1		Cat. 2			
	Ref	Element		Hazard Mit.	Perm. Remedy	Perm. Repair			
		Lighting	End Bridge operate as required by USCG regulations			days			
	8.7	Obstruction Lighting	Obstruction lights on East End Bridge operate as required by FAA regulations	24 hrs	48 hrs	28 days	Weekly visual inspection	No outages	100%
9) FENCES, WALLS AND SOUND ABATEMENT									
	9.1	Design and Location	Fences and walls act as designed and serve the purpose for which they were intended	7 days	28 days	6 mo.	Visual Inspection	Inspection records showing compliance	100%
	9.2	Reserved							
10) LANDSCAPING									
	10.1	Vegetated Areas – Except landscaped areas – General	Vegetation is maintained so that: i) Height of grass and weeds is kept within the limits described for urban and rural areas. Mowing begins before vegetation reaches the maximum height. ii) Spot mowing at intersections, ramps or other areas maintains visibility of appurtenances and sight distance. iii) Grass or vegetation does not encroach into or on	7 days	14 days	28 days	**a) Urban areas** Physical measurement of height of grass and weeds **b) Rural areas** Physical measurement of height of grass and weeds **c) Encroachment** Visual inspection of instances of encroachment of vegetation **d) Wildflowers** Visual Inspection with audit of process. **e) Sight lines** Visual inspection	Individual measurement areas to have 95% of height of grass and weeds between 5 inches and 18 inches Individual measurement areas to have 95% of height of grass and weeds between 5 inches and 30 inches Occurrences of vegetation encroachment Adherence to vegetation management manuals Instances of impairment of sight	100% 100% Nil 100% Nil

Element Category			Performance Requirement	Response to Defects			Inspection and Measurement Method*	Measurement Record*	Target
				Category 1		Cat. 2			
	Ref	Element		Hazard Mit.	Perm. Remedy	Perm. Repair			
			paved shoulders, main lanes, sidewalks, islands, riprap, traffic barrier or curbs. iv) A herbicide program is undertaken to control noxious weeds and to eliminate grass in pavement or walkways. v) A full width mowing cycle is completed after the first frost. vi) Wildflowers are preserved utilizing the aesthetic guidelines					lines or sight distance to signs	
	10.2	Landscaped Areas	i) All landscaped areas are maintained to their originally constructed condition. Landscaped areas are maintained as designated in the Plans. ii) Mowing, litter pickup, plant maintenance, pruning, insect, disease and pest control, fertilization, mulching, bed maintenance, watering is undertaken as per MP. iii) The height of grass and weeds is kept between 2 inches and 8 inches.	3 days	7 days	28 days	Visual inspection	Inspection records showing compliance	100%

Element Category			Performance Requirement	Response to Defects			Inspection and Measurement Method*	Measurement Record*	Target
				Category 1		Cat. 2			
	Ref	Element		Hazard Mit.	Perm. Remedy	Perm. Repair			
			Mowing begins before vegetation reaches 8 inches						
			Damaged or dead vegetation is replaced.	24 hrs	N/A	12 mo.	Visual inspection	Inspection records showing compliance	100%
	10.4	Trees, shrubs and ornamentals	i) Trees, shrubs and ornamentals on the right of way, except in established no mow areas, are trimmed in accordance with Project Standards.	N/A	N/A	12 mo.	Visual inspection	Inspection records showing compliance	100%
			ii) Trees, shrubs and ornamentals are trimmed to insure they do not interfere with vehicles or sight distance, or inhibit the visibility of signs.	7 days	28 days	6 mo.			
			iii) Dead trees, shrubs, ornamentals and branches are removed. Potentially dangerous trees or limbs are removed.	7 days	28 days	6 mo.			
			iv) All invasive or noxious trees and vegetation are removed. Diseased trees or limbs are treated or removed by licensed contractors.	N/A	N/A	12 mo.			
			Damaged or dead vegetation is replaced.	N/A	N/A	12 mo.	Visual inspection	Inspection records showing compliance	100%
	10.5	Wetlands	Wetlands are managed in accordance with the permit requirements	24 hrs	7 days	28 days	Visual inspection, assessment of permit issuers	Instances of permit requirements not met	Nil

Element Category			Performance Requirement	Response to Defects			Inspection and Measurement Method*	Measurement Record*	Target
				Category 1		Cat. 2			
	Ref	Element		Hazard Mit.	Perm. Remedy	Perm. Repair			
11) EARTHWORKS, EMBANKMENTS AND CUTTINGS									
	11.1	Slope Failure	All structural or natural failures of the embankment and cut slopes of the Facility are repaired	24 hrs	28 days	6 mo.	Visual inspection by geotechnical specialist and further tests as recommended by the specialist	Recorded instances of slope failure	Nil
	11.2	Slopes - General	Slopes are maintained in general conformance to the original graded cross-sections, the replacement of landscaping materials, reseeding and revegetation for erosion control purposes and removal and disposal of all eroded materials from the roadway and shoulders	24 hrs	28 days	6 mo.	Visual inspection	Inspection records showing compliance	100%
12) SNOW AND ICE CONTROL									
	12.1	Reserved							
	12.2	Continuous plowing and deicing	Continuous plowing and deicing application to achieve a maximum circuit time of 2 hours.	2 hrs	N/A	N/A	Circuit time measurement.	Winter operations record.	100%
	12.3	Reserved							
	12.4	Reserved							
	12.5	Snow accumulation	Snow accumulation adjacent to barrier walls removed concurrent with mainline pavement snow removal.	**	N/A	N/A	** Noncompliance is a Category 1 Defect.	Winter operations record.	100%
	12.6	Lanes and ramps (as defined in Section 10.3.1)	Achieve bare pavement after end of the winter event.	2 hr	N/A	N/A	Visual inspection	Winter operations record.	100%

Element Category		Performance Requirement	Response to Defects			Inspection and Measurement Method*	Measurement Record*	Target
			Category 1		Cat. 2			
Ref	Element		Hazard Mit.	Perm. Remedy	Perm. Repair			
12.7	Shoulders/ Medians/ Crossovers	Plowed within eight hours of the end of winter event, up to 6 inch total accumulation winter event.	8 hr	N/A	N/A	Visual inspection	Winter operations record.	100%
		Plowed within 12 hours of the end of winter event, over 6 inch and up to 10 inch total accumulation winter event.	12 hr	N/A	N/A			
		Plowed within 16 hours of the end of winter event over 10 inch total accumulation winter event.	16 hr	N/A	N/A			
12.8	Hazards	Address any hazard immediately upon detection or being made aware.	1 hr	N/A	N/A		Winter operations record.	100%
		Address isolated slippery conditions 100% of the time.	1 hr	N/A	N/A	Visual inspection or being made aware.	Winter operations record.	100%
12.9	Reserved							
12.10	Salt storage	Salt stored in covered buildings at all times.	**	N/A	N/A	** Noncompliance is a Category 1 Defect.	Instances of uncovered salt storage.	Nil
12.11	Reserved							
12.12	Reporting requirements	All reporting requirements identified in Section 22 are accurate, complete, and timely 100% of the time.	1 day	7 days	N/A	Audit.	Audit records.	100%

Element Category			Performance Requirement	Response to Defects			Inspection and Measurement Method*	Measurement Record*	Target
				Category 1		Cat. 2			
	Ref	Element		Hazard Mit.	Perm. Remedy	Perm. Repair			
	12.13	Reserved							
13) INCIDENT RESPONSE									
	13.1	General	Respond to Incidents and emergencies in accordance with Section 22.3.1.11.	30 min	N/A	N/A	Response times met for 90% of incidents measured on a 1 year rolling basis. No complaints from Emergency responders.	Inspection records showing compliance	100%
	13.2	Hazardous Materials	For any hazardous materials spills, comply with the requirements of Section 22.1.7	1 hr	N/A	N/A	Developers O&M Safety Plan details the process and procedures in place and followed.	Inspection records showing compliance	100%
	13.3	Structural assessment	Evaluate structural damage to structures and liaise with emergency services to ensure safe working in clearing the incident	1 hr	N/A	N/A	Inspections and surveys as required by incident.	Incident reports showing compliance	100%
	13.4	Temporary and permanent remedy	Propose and implement temporary measures or permanent repairs to Defects arising from the Incident. Ensure the structural safety of any structures affected by the incident	24 hrs	28 days	N/A	Review and inspection of the incident site.	Inspection records showing compliance	100%
14) CUSTOMER RESPONSE									
	14.1	Response to inquiries	Timely and effective response to customer inquiries and complaints.	48 hrs	28 days	N/A	Contact the customer within 48 hours following initial customer inquiry. All work resulting from customer requests is scheduled within 48 hours of customer contact.	Number of responses within specified times	100%

Element Category			Performance Requirement	Response to Defects			Inspection and Measurement Method*	Measurement Record*	Target
				Category 1		Cat. 2			
	Ref	Element		Hazard Mit.	Perm. Remedy	Perm. Repair			
							Follow-up contact with the customer within 72 hours of initial inquiry. All customer concerns/requests are resolved to IFA's satisfaction within 2 weeks of the initial inquiry.		
	14.2	Customer contact line	Telephone line manned during business hours and 24 hour availability of messaging system. Faults to telephone line or message system rectified	24 hrs	28 days	N/A	Instances of line out of action or unmanned	Operations records showing non availability including complaints from public.	nil
15) SWEEPING AND CLEANING									
	15.1	Sweeping	i) Keep all channels, hard shoulders, gore areas, ramps, intersections, islands and frontage roads swept clean, ii) Clear and remove debris from traffic lanes, hard shoulders, verges and central reservations, footways and cycle ways iii) Remove all sweepings without stockpiling in the right of way and dispose of at approved location.	7 days	28 days	6 mo.	Buildup of dirt, ice rock, debris, etc. on roadways and bridges not to accumulate greater than 24 inches wide or 0.50 inches deep	Inspection records showing compliance	100%
	15.2	Litter	i) Keep the right of way in a neat condition, remove litter regularly	N/A	28 days	N/A	No more than 20 pieces of litter per roadside mile shall be visible when traveling at highway speed.	Inspection records showing compliance	100%

Element Category			Performance Requirement	Response to Defects			Inspection and Measurement Method*	Measurement Record*	Target
				Category 1		Cat. 2			
	Ref	Element		Hazard Mit.	Perm. Remedy	Perm. Repair			
			ii) At a minimum pick up litter before mowing operations.						
16) EAST END BRIDGE SECURITY SYSTEM									
	16.1	Security System	Security system functions as intended by the ATVA.	1 hr	7 days	30 days	Automated logs	Inspection records showing compliance	100%
	16.2	Electrical Power	Normal electrical power supply system functions as intended by the ATVA.	1 hr	7 days	30 days	Automated logs	Inspection records showing compliance	100%
	16.3	Back-up Electrical Power	Back-up electrical power supply system functions as intended by the ATVA.	1 hr	7 days	30 days	Automated logs	Inspection records showing compliance	100%
	16.4	CCTV System	CCTV system functions as intended by the ATVA.	1 hr	7 days	30 days	Automated logs	Inspection records showing compliance	100%

Notes:

* Items in these columns shall be reviewed annually by Developer as part of the MP to comply with Technical Provisions and/or Good Industry Practice.

“Hazard Mit.” denotes Hazard Mitigation which is defined as an action taken to mitigate a danger to users.

“Perm. Remedy” denotes Permanent Remedy which is defined as an action taken to provide temporary remediation to eliminate a dangerous condition or level of service reduction until a permanent repair can be undertaken.

“Perm. Repair” denotes Permanent Repair which is defined as the action taken to restore the asset to full compliance with the Performance Requirements.

Table 22–2 IRI Requirements

Pavement Smoothness for HMA and PCCP		
Design Speed (mph)	**IRI (in./mile) (1 Mile Average)**	**IRI (in./mile) (300 ft Section)**
>55	120	160
>45 ≤55	130	190
>35 ≤45	140	190
≤35	150	190

THE EAST END CROSSING

(LOUISVILLE-SOUTHERN INDIANA OHIO RIVER BRIDGES PROJECT)

PUBLIC-PRIVATE AGREEMENT

BOOK 2
TECHNICAL PROVISIONS

ATTACHMENT 26-2
ADDITIONAL PROJECT STANDARDS

(This page intentionally blank.)

SPECIAL NOTE FOR CONTRACT

Whenever the word “Contractor”, as defined in 101.15 of the Standard Specifications, is used, it shall be interpreted to mean Developer.

OIL AND GAS WELL PLUGGING AND ABANDONMENT

The Standard Specifications are revised as follows:

SECTION 202, BEGIN LINE 30, INSERT AS FOLLOWS:

Cisterns, septic tanks, other tanks, basements, and cavities shall be backfilled in an approved manner. Those which cannot be backfilled satisfactorily shall be removed. If the backfill is within the limits of construction, it shall be completed in accordance with 203.23, unless otherwise directed. All abandoned wells shall be backfilled in accordance with the Indiana Code. *All existing oil and gas wells shall be plugged and abandoned in accordance with the requirements of IC 14-37-8, 312 IAC 16-5-19 and all regulations set forth by the Indiana Department of Natural Resources Division of Oil and Gas.* A copy of the driller's license shall be furnished to the Engineer prior to commencement of work.