Attachment A

DIMENSIONAL NOTES

ALL BOX DIMENSIONS ARE ± 1/8 UNLESS OTHERWISE NOTED.
ALL PRINTING DIMENSIONS ARE ±1/4.

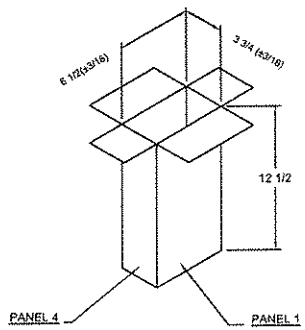

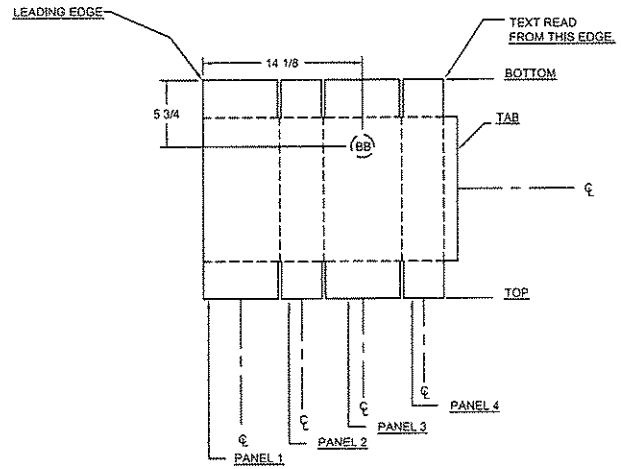

BOX PRINTING LAYOUT DRAWING

BOX PHYSICALS

STYLE: CSO

MATERIAL: EQUAL TO OR BETTER THAN 200# S/W CORRUGATED BOARD, C FLUTE, AND MAY BE SPLICED TO OBTAIN BOX DIMENSIONS.

FLAP GAP: INNER FLAPS SHALL CLOSE AND MEET WITH NO OVERLAP AND A GAP NO GREATER THAN 1/4".

JOINT: GLUED TAB

GRAPHICS & FINISHING

1. FOR LOCATION PURPOSES, ALL GRAPHICS ARE REPRESENTED BY RECTANGLES OR CIRCLES DRAWN AROUND THE OUTERMOST EDGES OF THE ARTWORK. DIMENSIONS ARE HELD TO THE CENTER-LINE OF THE SHAPES. REFERENCE GRAPHICS LOCATION FOR ACTUAL ARTWORK SAMPLES.
2. THE STOCK CODE # TO BE PRINTED OR EMBOSSED AND HIDDEN WHEN FULLY ASSEMBLED
3. BB = 200 LB. CERTIFICATION SEAL OR EQUIVALENT PER INTERSTATE COMMERCE FREIGHT CLASSIFICATIONS.

WARNING: ALL INFORMATION CONTAINED WITHIN THIS PRINT IS CONFIDENTIAL AND IS THE PROPERTY OF INDIANA DEPT. OF CORRECTION. BY ACCEPTING THIS PRINT THE USER AGREES THAT IT SHALL NOT BE USED FOR ANY OTHER PURPOSE THAN THAT FOR WHICH IT WAS INTENDED.

REV	ERN	STATUS	DATE
A	020016	BOX WIDTH REVISED TO 3 3/4" (SEE ECR #A0102)	7-9-02
NR	970018	NEW RELEASE	5-05-97

NOTES:

TOLERANCES:
DRAWN BY: D. MEEHAN
PLOT SCALE: 3/32=1
DRAWN DATE: 8-29-96
FRACTION: AS NOTED
DECIMAL
ANGLE
RELEASE DATE: 7/9/02
ECN: 020016
OTHER DATA:

PEN PRODUCTS
Prison Enterprises Network

DESCRIPTION: CORRUGATED BOX 6 1/2 X 3 3/4 X 12 1/2

DRAWING NUMBER: 92501-006
REV: A

PRINT/DIE KEY

LABEL	I.D. NO.	SIZE	DESCRIPTION
AA*	N/A	VARIES	STOCK CODE #
BB*	7296-026	2	200# CERTIFICATION SEAL

DIMENSIONAL NOTES

ALL BOX DIMENSIONS ARE ±3/16 UNLESS OTHERWISE NOTED.
ALL PRINTING DIMENSIONS ARE ±1/4.

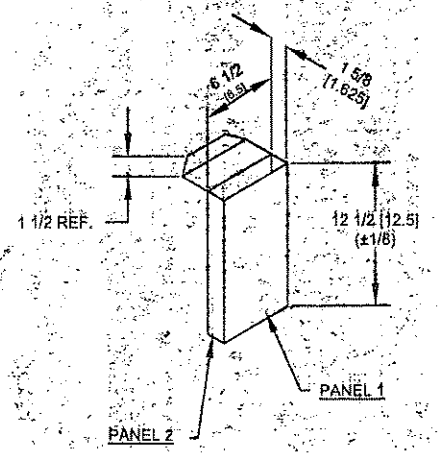

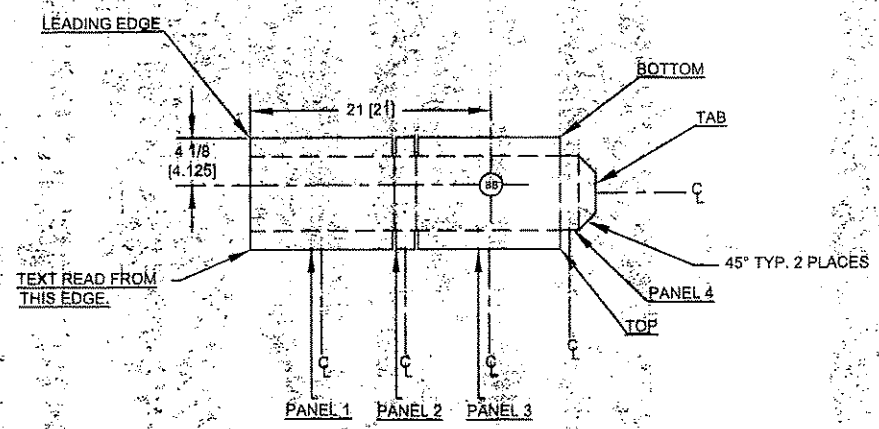

BOX PRINTING LAYOUT DRAWING

SEE NOTE #4

ASSEMBLED VIEW - ALL DIMENSIONS I.D
STYLE: FPF
TYPE: 200# S/W CORRUGATED BD. C - FLUTE

NOTES:

1. FOR LOCATION PURPOSES, ALL GRAPHICS ARE REPRESENTED BY RECTANGLES OR CIRCLES DRAWN AROUND THE OUTERMOST EDGES OF THE ARTWORK. DIMENSIONS ARE HELD TO THE CENTER-LINE OF THE SHAPES. REFERENCE GRAPHICS LOG FOR ACTUAL ARTWORK SAMPLES.
2. THE STOCK CODE # TO BE HIDDEN WHEN FULLY ASSEMBLED.
3. OUTER FLAPS SHALL BE FULLY OVERLAPPING +0-1/4.
4. THE "XXXXX-XXX" STOCKCODE ON THIS DRAWING WILL BE REPLACED WITH THE PROPER SIZE CORRUGATED BOARD SELECTION NUMBER. REFERENCE THE BILL OF MATERIAL.

ITEM	STOCK CODE	QUANTITY	MATERIAL DESCRIPTION	DOCUMENT
3	00364-001	N/A	INK, FLEXO BLACK	00364-000
2	00070-001	N/A	INK, STENCIL, DE-XLM, BLACK	00070-000
1	XXXXX-XXX	N/A	CORRUGATED BOARD, S/W, C FLUTE PARALLEL TO FIRST DIMENSION, 200#	00113-000

WARNING: ALL INFORMATION CONTAINED WITHIN THIS PRINT IS CONFIDENTIAL AND IS THE PROPERTY OF INDIANA DEPT. OF CORRECTION. BY ACCEPTING THIS PRINT THE USER AGREES THAT IT SHALL NOT BE USED FOR ANY OTHER PURPOSE THAN THAT FOR WHICH IT WAS INTENDED.

REV	ERN	STATUS	DATE
NR	010050	NEW RELEASE	7/13/01

NOTES:
AS REQUIRED

PEN PRODUCTS
Prison Enterprises Network

TOLERANCES: AS NOTED
DESIGNATED BY: K.CARTER
PLOT SCALE: 3/32=1
DRAWN BY: 7/27/99
RELEASE DATE: 7/13/01
CHK: 010050
OTHER DATA:

DESCRIPTION: CORRUGATED BOX 12-1/2 X 6-1/2 X 1-5/8

DRAWING NUMBER: 92508-002
REV: NR

PRINT/DIE KEY

LABEL	I.D. NO.	SIZE	DESCRIPTION
AA	N/A	VARIES	STOCK CODE #
BB	V 7296-017	3 3/16 DIA	200# CERTIFICATION SEAL
CC	V 7296-018	7 X 4 1/2	RECTANGULAR LABEL BRACKET

DIMENSIONAL NOTES

ALL BOX DIMENSIONS ARE ±3/16 UNLESS OTHERWISE NOTED.
ALL PRINTING DIMENSIONS ARE ±1/4.

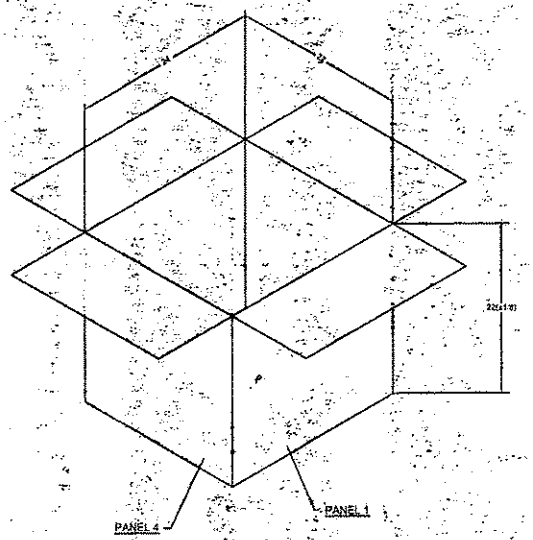

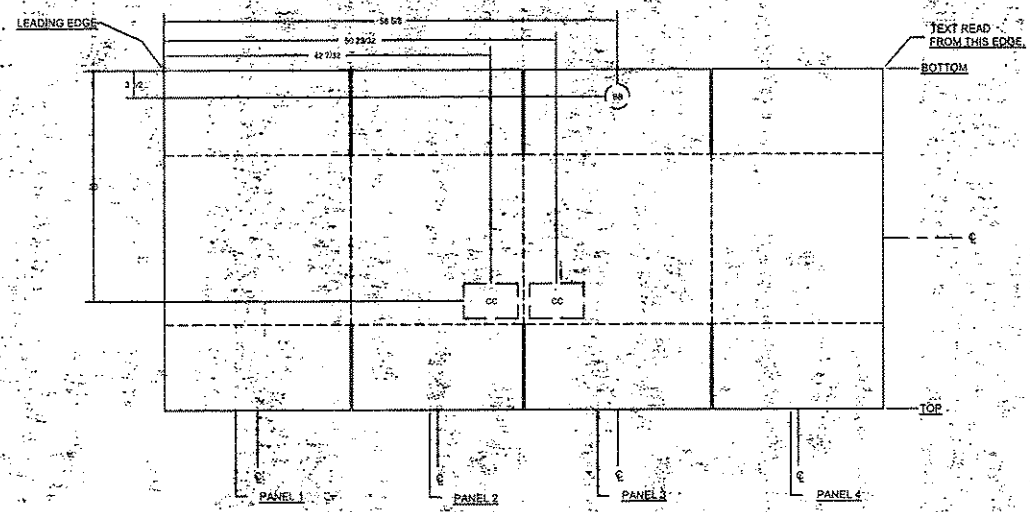

BOX PRINTING LAYOUT DRAWING

FLAP GAP NOTE:
ALL BOX FLAPS SHALL CLOSE AND MEET WITH NO OVERLAP AND A GAP NO GREATER THAN 1/4.

ITEM	STOCK CODE	QUANTITY	MATERIAL DESCRIPTION	DOCUMENT
4	00364-001	N/A	INK, FLEXO BLACK	00364-000
3	00070-001	N/A	INK, STENCIL, DL-XLM, BLACK	00070-000
2	02057-001	N/A	TAPE, NON-ASPHALTIC, GUMMED SEALING, RE-INFORCED THREE-WAY, 3	02057-000
1	01866-001	N/A	CORRUGATED BOARD, S/W, C FLUTE, PARALLEL TO FIRST DIMENSION, 200#, 48X98	00113-000

WARNING: ALL INFORMATION CONTAINED WITHIN THIS PRINT IS CONFIDENTIAL AND IS THE PROPERTY OF INMAKINDEPT, OF CORRECTION, BY ACCEPTING THIS PRINT THE USER AGREES THAT IT SHALL NOT BE USED FOR ANY OTHER PURPOSE THAN THAT FOR WHICH IT WAS INTENDED.

NOTES:

PEN PRODUCTS
Prison Enterprises Network

TOLERANCES: AS NOTED

GENERATED BY: D. MEEHAN | PLOT SCALE: 1/16=1 | DESIGN DATE: 11-04-97

RELEASE DATE: 9-14-98 | CAD: 980048

OTHER DATA:

DESCRIPTION: CORRUGATED BOX 24 X 22 X 22

DRAWING NUMBER: 92500-075 | REV: NR

REV	ERN	STATUS	DATE
NR	980048	NEW RELEASE	9-14-98

ASSEMBLED VIEW - ALL DIMENSIONS I.D.

STYLE: RSC
TYPE: 200# S/W CORRUGATED BD. C - FLUTE

NOTES:

1. FOR LOCATION PURPOSES, ALL GRAPHICS ARE REPRESENTED BY RECTANGLES OR CIRCLES DRAWN AROUND THE OUTERMOST EDGES OF THE ARTWORK. DIMENSIONS ARE HELD TO THE CENTER-LINE OF THE SHAPES. REFERENCE GRAPHICS LOG FOR ACTUAL ARTWORK SAMPLES.
2*. THE STOCK CODE # TO BE HIDDEN WHEN FULLY ASSEMBLED.

ENGINEERING SPECIFICATION
STATE OF INDIANA
DEPARTMENT OF CORRECTION
PEN PRODUCTS

I. OBJECTIVE:
To provide a corrugated shipping box for Garment products.

II. REQUIREMENTS:

A. Material	Equal to or better than 200 lb. Single wall Corrugated Board, May be spliced (glued) to obtain box Dimension.
B. Type	RSC, International Box Code 0201
C. Flap gap	Outer flaps shall close and meet with no overlap and a gap no greater than ¼"
D. Joint	Glue tab (Glue preferred for box "Adhesive, Hot Melt" ETOB National Starch and Chemical Co. Instant Lok 342616).
E. Certification Seal	Must have 200 lb Certification Seal or equivalent per U.S. DOT Regulations 49 CFR. 178.3 & 178.503 and Interstate Commerce Freight Classifications. Located and visible on the purposed bottom of the box when assembled.
F. Text	The stock code numbers to be printed or embossed and hidden when assembled. Text "THIS SIDE UP" minimum text height of 1" ± ¼, letters to be upper case. Location of TEXT and ARROWS to be with a gap of 3 /4 " from top fold line of the largest two panels and centered.
G. Graphics	ARROWS pointing away from Certification seal. Arrows to be minimum height of 1 ½" ± ¼, and

ORIGIN DATE	DESCRIPTION	DOCUMENT NO.
July 13 , 2003	CORRUGATED RSC BOX 20 X 17 1/2 X 17	92500-114
GENERATED BY		RELEASE DATE
J HUGHES		
ERN NO		REVISION NO.
		4

ENGINEERING SPECIFICATION
STATE OF INDIANA
DEPARTMENT OF CORRECTION
PEN PRODUCTS

H. Size (internal dimensions) — Length 20 +/ - 3/16
Width 17 ½ +/-3/16
Height 17 +/ - 3/16

III PROCUREMENT:

A. Packaging/Shipping
Per purchase order

B. Reference — 1992 Fiber Box Handbook
Fiber Box Association

C. Method of Specifying — 92500-114

ORIGIN DATE	DESCRIPTION	DOCUMENT NO.
July 13 , 2003	CORRUGATED RSC BOX 20 X 17 1/2 X 17	92500-114
GENERATED BY		RELEASE DATE
J HUGHES		
ERN NO		REVISION NO.
		4

PRINT/DIE KEY

LABEL	I.D. NO.	SIZE	DESCRIPTION
AA*	N/A	VARIES	STOCK CODE #
BB	V 7296-017	3 3/16 DIA.	200# CERTIFICATION SEAL
CC	V 7296-018	7 X 4 1/2	RECTANGULAR LABEL BRACKET
DD	V 7296-022	6 1/2 X 1 1/2	THIS SIDE UP

DIMENSIONAL NOTES

ALL BOX DIMENSIONS ARE ±3/16 UNLESS OTHERWISE NOTED.
ALL PRINTING DIMENSIONS ARE ±1/4.

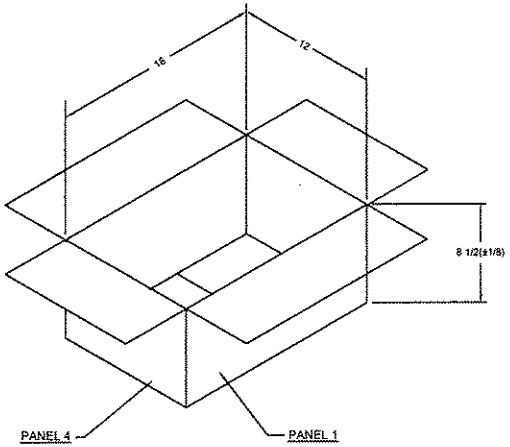

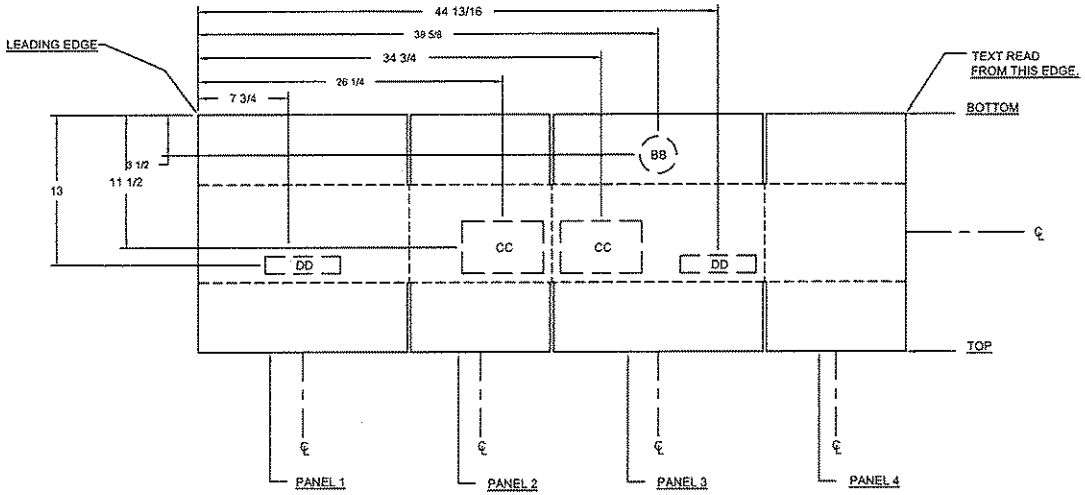

BOX PRINTING LAYOUT DRAWING

FLAP GAP NOTE:

ALL BOX FLAPS SHALL CLOSE AND MEET WITH NO OVERLAP AND A GAP NO GREATER THAN 1/4.

ASSEMBLED VIEW - ALL DIMENSIONS I.D

STYLE: RSC

TYPE: 200# S/W CORRUGATED BD. C - FLUTE

NOTES:

1. FOR LOCATION PURPOSES, ALL GRAPHICS ARE REPRESENTED BY RECTANGLES OR CIRCLES DRAWN AROUND THE OUTERMOST EDGES OF THE ARTWORK. DIMENSIONS ARE HELD TO THE CENTER-LINE OF THE SHAPES. REFERENCE GRAPHICS LOCATION FOR ACTUAL ARTWORK SAMPLES.

*2. THE STOCK CODE # TO BE HIDDEN WHEN FULLY ASSEMBLED.

ITEM	STOCK CODE	QUANTITY	MATERIAL DESCRIPTION	DOCUMENT
4	00364-001	N/A	INK, FLEXO BLACK	00364-000
3	00070-001	N/A	INK, STENCIL, DL-XLM, BLACK	00070-000
2	02057-001	N/A	TAPE, NON-ASPHALTIC, GUMMED SEALING, RE-INFORCED THREE-WAY, 3	02057-000
1	00117-001	N/A	CORRUGATED BOARD, S/W, C FLUTE, PARALLEL TO FIRST DIMENSION, 200#, 43X69	00113-000

WARNING: ALL INFORMATION CONTAINED WITHIN THIS PRINT IS CONFIDENTIAL AND IS THE PROPERTY OF KIZZAN DEPT. OF CORRECTION. BY ACCEPTING THIS PRINT THE USER AGREES THAT IT SHALL NOT BE USED FOR ANY OTHER PURPOSE THAN THAT FOR WHICH IT WAS INTENDED.

REV	ERN	STATUS	DATE
NR	980048	NEW RELEASE	9-14-98

NOTES:

PEN PRODUCTS
Pelton Enterprises Network

TOLERANCES:
DRAWN BY: D. MEEHAN
PLOT SCALE: 3/32=1
ORIGIN DATE: 5-20-98
FRACTIONS: AS NOTED
DECIMALS:
ANGLE:
RELEASE DATE: 9-14-98
ERN: 980048
OTHER DATA:
DESCRIPTION: CORRUGATED BOX 18 X 12 X 8 1/2
DRAWING NUMBER: 92500-014
REV: NR

DIMENSIONAL NOTES

ALL BOX DIMENSIONS ARE ±3/16 UNLESS OTHERWISE NOTED.
ALL PRINTING DIMENSIONS ARE ±1/4

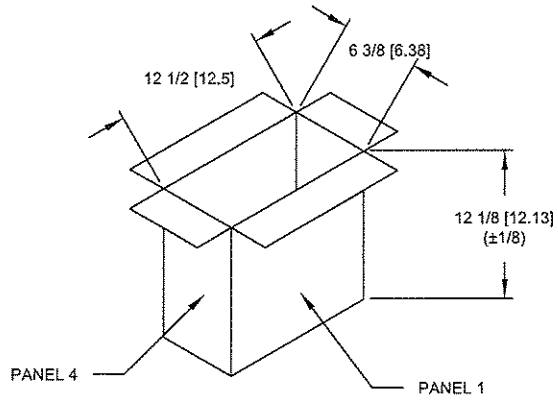

ASSEMBLED VIEW-ALL DIMENSIONS I.D.

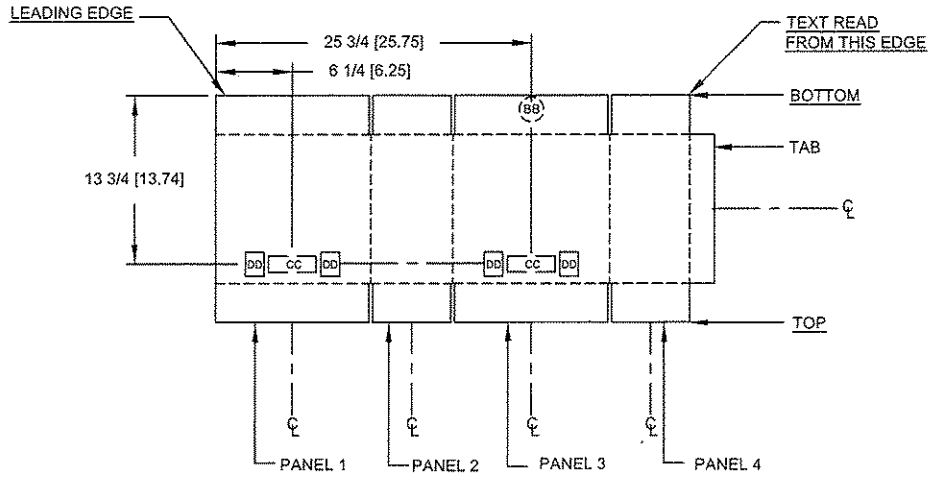

BOX PRINTING LAYOUT DRAWING

BOX PHYSICALS

STYLE: RSC
MATERIAL: EQUAL TO OR BETTER THAN 200# S/W CORRUGATED BOARD,AND MAY BE SPLICED (GLUED)TO OBTAIN BOX DIMENSIONS.
FLAP GAP: OUTER FLAPS SHALL CLOSE AND MEET WITH NO OVERLAP AND A GAP NO GREATER THAN 1/4"
JOINT: GLUED TAB (GLUE PREFERRED FOR BOX " ADHESIVE, HOT MELT" . ETOB NATIONAL STARCH AND CHEMICAL CO. INSTANT LOK 34-2616)

GRAPHICS & FINISHING

1. FOR LOCATION PURPOSES, ALL GRAPHICS ARE REPRESENTED BY RECTANGLES OR CIRCLES DRAWN AROUND THE OUTERMOST EDGES OF THE ARTWORK. DIMENSIONS ARE HELD TO THE CENTER-LINE OF THE SHAPES. REFERENCE GRAPHICS LOCATION FOR ACTUAL ARTWORK SAMPLES.
2. THE STOCK CODE # TO BE PRINTED OR EMBOSSED AND HIDDEN WHEN FULLY ASSEMBLED.
3. BB = 200 LB. CERTIFICATION SEAL OR EQUIVALENT PER U.S. DOT REGULATIONS 49 CFR 178.3 & 178.503 AND INTERSTATE COMMERCE FREIGHT CLASSIFICATIONS.
4. CC = TEXT "THIS SIDE UP". MINIMUM TEXT HEIGHT OF 1". LETTERS TO BE IN UPPER CASE.
5. DD = ARROWS POINTING AWAY FROM CERTIFICATION SEAL. ARROWS TO BE A MINIMUM HEIGHT OF 1 1/2 AND BE SYMMETRICAL ABOUT "CC".

WARNING: ALL INFORMATION CONTAINED WITHIN THIS PRINT IS CONFIDENTIAL AND IS THE PROPERTY OF INDIANA DEPT. OF CORRECTION. BY ACCEPTING THIS PRINT THE USER AGREES THAT IT SHALL NOT BE USED FOR ANY OTHER PURPOSE THAN THAT FOR WHICH IT WAS INTENDED.

REV	ERN	STATUS	DATE
B	020013	REDRAWN WITH CHANGE (SEE ECR# M0006)	06/06/02
A	010930	MODIFIED DIMENSIONS TO CURRENT STANDARDS (SEE ECR #F0071)	5/14/01
NR	010018	NEW RELEASE	4/9/01

NOTES:

PEN PRODUCTS
Prison Enterprises Network

TOLERANCES: AS NOTED | AS NOTED | CARTER/ HUGHES | 3/32 | 1/11/01
06/06/02 | 020013

OTHER DATA:

DESCRIPTION: BOX, RSC, 12-1/2 X 6-3/8 X 12-1/8

DRAWING NUMBER: 92500-098 | REV: B

PRINT/DIE KEY

LABEL	I.D. NO.	SIZE	DESCRIPTION
AA*	N/A	VARIES	STOCK CODE #
BB	V 7296-026	2	200# CERTIFICATION SEAL
CC	V 7296-018	7 X 4-1/2	RECTANGULAR LABEL BRACKET

DIMENSIONAL NOTES

ALL BOX DIMENSIONS ARE ±3/16 UNLESS OTHERWISE NOTED.
ALL PRINTING DIMENSIONS ARE ±1/4

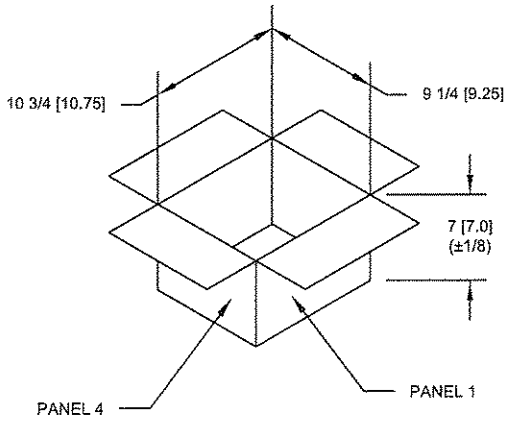

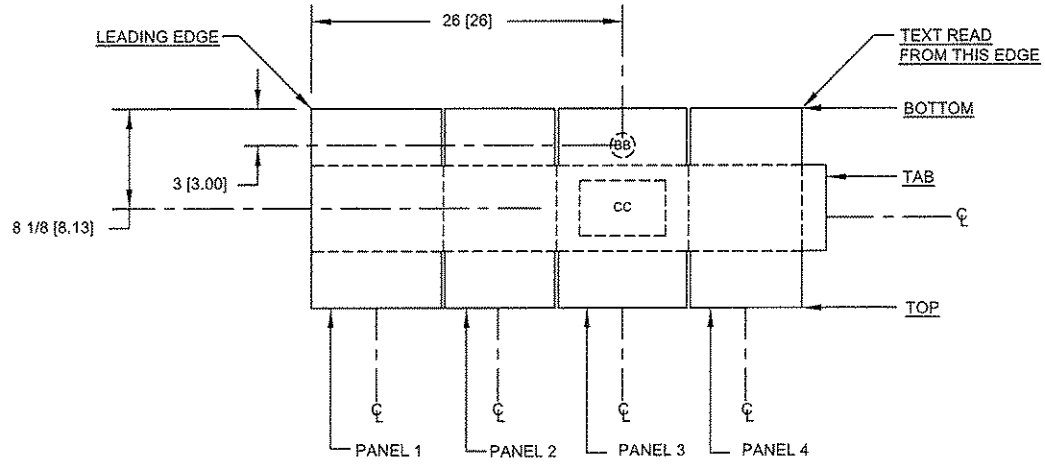

BOX PRINTING LAYOUT DRAWING

FLAP GAP NOTE

ALL BOX FLAPS SHALL CLOSE AND MEET WITH NO OVERLAP AND GAP NO GREATER THAN 1/4.

ASSEMBLED VIEW-ALL DIMENSIONS I.D.

STYLE: RSC
TYPE:200# S/W CORRUGATED BD. C-FLUTE

NOTES:

1. FOR LOCATION PURPOSES, ALL GRAPHICS ARE REPRESENTED BY RECTANGLES OR CIRLES DRAWN AROUND THE OUTERMOST EDGES OF THE ARTWORK. DIMENSIONS HELD TO THE CENTERLINE OF THE SHAPES. REFERENCE GRAPHICS LOCATION FOR ACTUAL ARTWORK SAMPLES.

2* THE STOCKCODE # TO BE HIDDEN WHEN FULLY ASSEMBLED.

3. THE "XXXXX-XXX" ON THIS DRAWING WILL BE REPLACED WITH THE PROPER SIZE CORRUGATED BOARD SELECTION NUMBER. REFERENCE THE BILL OF MATERIAL.

SEE NOTE #3

ITEM	STOCK CODE	QUANTITY	MATERIAL DESCRIPTION	DOCUMENT
4	XXXXX-XXX	N/A	CORRUGATED BOARD, S/W, FLUTE	00113-000
3	00364-001	N/A	INK, FLEXO BLACK	00364-000
2	02057-001	N/A	TAPE, NON-ASPHALTIC, GUMMED SEALING, RE-INFORCED THREE-WAY, 3	02057-000
1	00070-001	N/A	INK, STENCIL, DL-XLM, BLACK	00070-000

WARNING: ALL INFORMATION CONTAINED WITHIN THIS PRINT IS CONFIDENTIAL AND IS THE PROPERTY OF INDIANA DEPT. OF CORRECTION. BY ACCEPTING THIS PRINT THE USER AGREES THAT IT SHALL NOT BE USED FOR ANY OTHER PURPOSE THAN THAT FOR WHICH IT WAS INTENDED.

REV	ERN	STATUS	DATE
NR	010028	NEW RELEASE	5/4/01

NOTES:

PEN PRODUCTS
Prison Enterprises Network

TOLERANCES: DESIGNATED BY: K.R.CARTER | PLOT SCALE: 3/32 | DRAWN DATE: 03/05/01
FRACTION: ±1/32 | DECIMAL: ±.03 | ANGLE: | REVISION DATE: 5/4/01 | ERN: 010028

OTHER DATA:

DESCRIPTION: BOX, RSC, 10-3/4 X 9-1/4 X 7

DRAWING NUMBER: 92500-100 | REV: NR

PRINT/DIE KEY

LABEL	I.D. NO.	SIZE	DESCRIPTION
AA*	N/A	VARIES	STOCK CODE #
BB	V 7296-026	2	200# CERTIFICATION SEAL
CC	V 7296-018	7 X 4-1/2	RECTANGULAR LABEL BRACKET

DIMENSIONAL NOTES

ALL BOX DIMENSIONS ARE ±3/16 UNLESS OTHERWISE NOTED.
ALL PRINTING DIMENSIONS ARE ±1/4

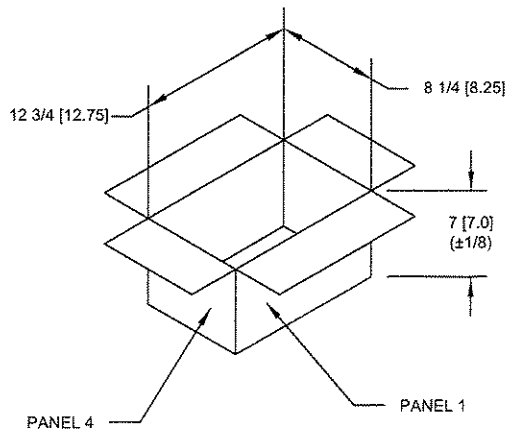

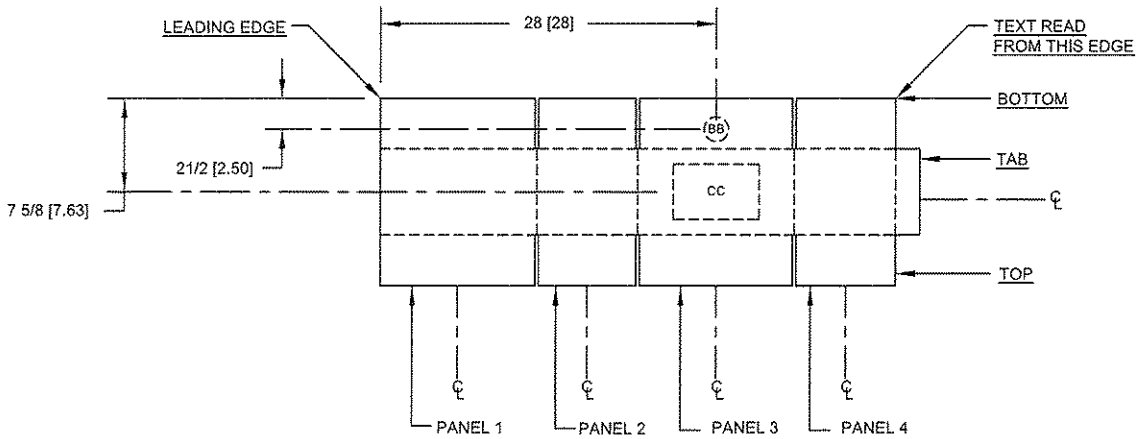

FLAP GAP NOTE

ALL BOX FLAPS SHALL CLOSE AND MEET WITH NO OVERLAP AND GAP NO GREATER THAN 1/4.

ASSEMBLED VIEW-ALL DIMENSIONS I.D.

STYLE: RSC
TYPE:200# S/W CORRUGATED BD. C-FLUTE

BOX PRINTING LAYOUT DRAWING

NOTES:

1. FOR LOCATION PURPOSES, ALL GRAPHICS ARE REPRESENTED BY RECTANGLES OR CIRLES DRAWN AROUND THE OUTERMOST EDGES OF THE ARTWORK. DIMENSIONS HELD TO THE CENTERLINE OF THE SHAPES. REFERENCE GRAPHICS LOCATION FOR ACTUAL ARTWORK SAMPLES.

2* THE STOCKCODE # TO BE HIDDEN WHEN FULLY ASSEMBLED.

3. THE "XXXXX-XXX" ON THIS DRAWING WILL BE REPLACED WITH THE PROPER SIZE CORRUGATED BOARD SELECTION NUMBER. REFERENCE THE BILL OF MATERIAL.

SEE NOTE #3

ITEM	STOCK CODE	QUANTITY	MATERIAL DESCRIPTION	DOCUMENT
4	XXXXX-XXX	N/A	CORRUGATED BOARD, S/W, FLUTE	00113-000
3	00364-001	N/A	INK, FLEXO BLACK	00364-000
2	02057-001	N/A	TAPE, NON-ASPHALTIC, GUMMED SEALING, RE-INFORCED THREE-WAY, 3	02057-000
1	00070-001	N/A	INK, STENCIL, DL-XLM, BLACK	00070-000

WARNING: ALL INFORMATION CONTAINED WITHIN THIS PRINT IS CONFIDENTIAL AND IS THE PROPERTY OF INDIANA DEPT. OF CORRECTION. BY ACCEPTING THIS PRINT THE USER AGREES THAT IT SHALL NOT BE USED FOR ANY OTHER PURPOSE THAN THAT FOR WHICH IT WAS INTENDED.

REV	ERN	STATUS	DATE
NR	010028	NEW RELEASE	5/4/01

NOTES:

PRODUCTS
Prison Enterprises Network

TOLERANCES: FRACTION ±1/32 DECIMAL ±.03 ANGLE

DRAWN BY: K.R.CARTER
PROP SCALE: 3/32
DRAWING DATE: 03/05/01
RELEASE DATE: 5/4/01
TIME: 010028

OTHER DATA:

DESCRIPTION: BOX, RSC, 12-3/4 X 8-1/4 X 7

DRAWING NUMBER: 92500-101
REV: NR

DIMENSIONAL NOTES

ALL BOX DIMENSIONS ARE ± 3/16 UNLESS OTHERWISE NOTED.

ALL PRINTING DIMENSIONS ARE ±1/4

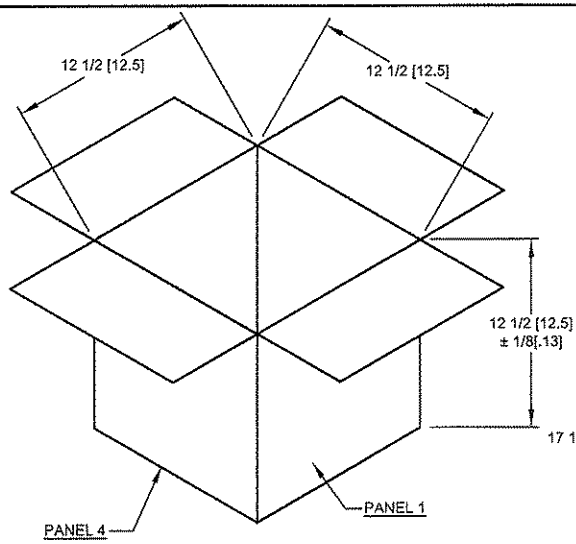

ASSEMBLED VIEW - ALL DIMENSIONS I.D

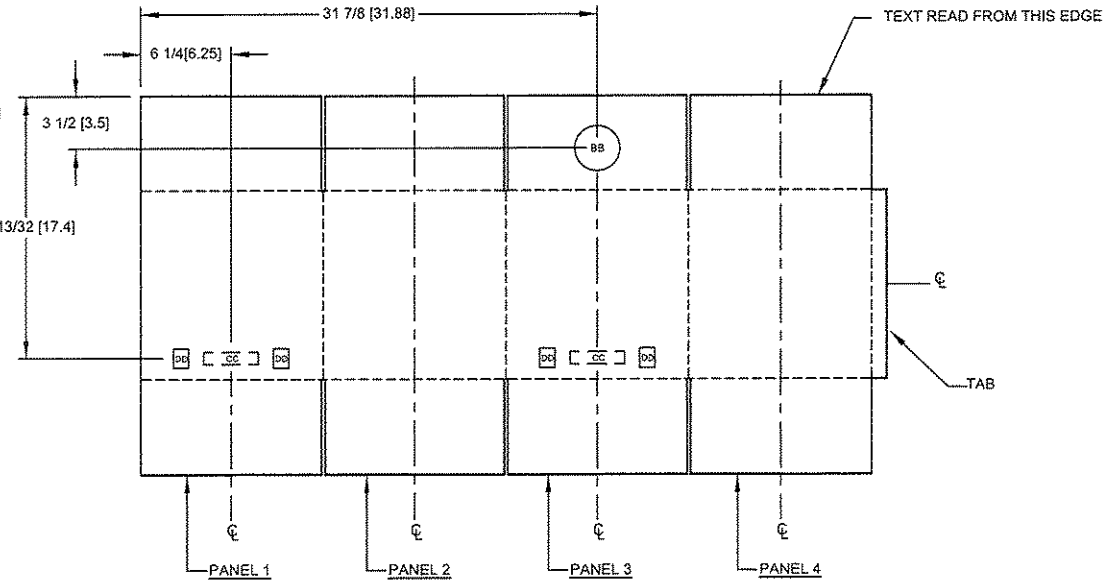

BOX PRINTING LAYOUT DRAWING

BOX PHYSICALS

STYLE: RSC

MATERIAL: EQUAL TO OR BETTER THAN #200 S/W CORRUGATED BOARD. MAY BE SPLICED (GLUED) TO OBTAIN BOX DIMENSIONS.

FLAP GAP: OUTER FLAPS SHALL CLOSE AND MEET WITH NO OVERLAP AND A GAP NO GREATER THAN 1/4"

JOINT: GLUE TAB (GLUE PREFERRED FOR BOX" ADHESIVE, HOT MELT" ETOB NATIONAL STARCH AND CHEMICAL CO. INSTANT LOK 34-2616)

GRAPHICS & FINISHING

1. FOR LOCATION PURPOSES, ALL GRAPHICS ARE REPRESENTED BY RECTANGLES OR CIRCLES DRAWN AROUND THE OUTERMOST EDGES OF THE ARTWORK. DIMENSIONS ARE HELD TO THE CENTER-LINE OF THE SHAPES. REFERENCE GRAPHICS LOCATION FOR ACTUAL ARTWORK SAMPLES.
2. THE STOCK CODE # TO BE PRINTED OR EMBOSSED AND HIDDEN WHEN ASSEMBLED
3. BB = 200 LB. CERTIFICATION SEAL OR EQUIVALENT PER U.S. DOT REGULATION 49 CFR 178.3 & 178.503 AND INTERSTATE COMMERCE FREIGHT CLASSIFICATIONS.
4. CC= TEXT " THIS SIDE UP" MINIMUM TEXT HEIGHT OF 1". LETTERS TO BE IN UPPER CASE.
5. DD= ARROWS POINTING AWAY FROM CERTIFICATION SEAL. ARROWS TO BE A MINIMUM HEIGHT OF 1 1/2" AND BE SYMMETRICAL ABOUT "CC".

WARNING: ALL INFORMATION CONTAINED WITHIN THIS PRINT IS CONFIDENTIAL AND IS THE PROPERTY OF INDIANA DEPT. OF CORRECTION. BY ACCEPTING THIS PRINT THE USER AGREES THAT IT SHALL NOT BE USED FOR ANY OTHER PURPOSE THAN THAT FOR WHICH IT WAS INTENDED.

REV	ERN	STATUS	DATE
NR	020021	NEW RELEASE	09/11/02

NOTES:

PEN PRODUCTS
Prison Enterprises Network

TOLERANCES: | GENERATED BY: J HUGHES | PART SCALE: 1/8 | DRAWN DATE: 05/13/02

FRACTION: AS NOTED | DECIMAL: AS NOTED | ANGLE: | RELEASE DATE: 09/11/02 | EN: 020021

OTHER DATA:

DESCRIPTION: BOX, RSC 12 1/2 x 12 1/2 x 12 1/2

DRAWING NUMBER: 92500-108 | REV: NR

ENGINEERING SPECIFICATION
STATE OF INDIANA
DEPARTMENT OF CORRECTION
PEN PRODUCTS

I. OBJECTIVE:
To provide a corrugated shipping box for soap products in quart size bottles.

II. REQUIREMENTS:

A. Material	Equal to or better than 200 lb. Single wall Corrug ated Board, May be spliced (glued) to obtain box Dimension.
B. Type	RSC, International Box Code 0201
C. Flap gap	Outer fla ps shall close and meet with no overlap and a gap no greater than ¼"
D. Joint	Glue tab (Glue preferred for box " Adhesive, Hot Melt" ETOB N ational Starch and Chemical Co. Instant Lok 342616).
E. Certification Seal	Must have 200 lb Certification Seal or equivalent per U.S. DOT Regulations 49 CFR. 178.3 & 17 8.503 and Interstate Commerce Frei ght Classifications. Located and visible on the purposed bottom of the box when assembled.
F. Text	The stock code numbers to be printed or embossed a nd hidden when assembled. Text "THIS SIDE UP" minimum text height of 1" ± ¼, letters to be upper case. Location of TEXT and ARROWS to be with a gap o f 3 /4 " from top fold line of the lar gest two panels and Centered.
G. Gra phics	ARROWS pointing away from Certification seal. A rrows to be minimum height of 1 ½" ± ¼, and be s ymmetrical about Text ' THIS SIDE UP"

ORIGIN DATE	DESCRIPTION	DOCUMENT NO.
February 24, 2003	CORRUGATED RSC BOX 15 X 11 1/8 X 10 3/ 4	92500-112
GENERATED BY		RELEASE DATE
J HUGHES		04/02/03
ERN NO		REVISION NO.
030012		NR

ENGINEERING SPECIFICATION
STATE OF INDIANA
DEPARTMENT OF CORRECTION
PEN PRODUCTS

H. Compatibilit y — Must be compatible with Partition 92700-016 and 92700-017.

I. Size (internal dimensions) — Length 15 +/ - 3/16
Width 11 1/ 8+/-3/16
Height 10 3 / 4 +/ - 3/16

III PROCUREMENT:

A. Packaging/Shipping
Per purchase order

B. Reference — 1992 Fiber Box Handbook
Fiber Box Association

C. Method of Specifying — 92500-112

ORIGIN DATE	DESCRIPTION	DOCUMENT NO.
February 24, 2003	CORRUGATED RSC BOX 15 X 11 1/8 X 10 3/ 4	92500-112
GENERATED BY		RELEASE DATE
J HUGHES		04/02/03
ERN NO		REVISION NO.
030012		NR

ENGINEERING SPECIFICATION
STATE OF INDIANA
DEPARTMENT OF CORRECTION
PEN PRODUCTS

I. OBJECTIVE:

To provide a corrugated shipping box for cleaning products in packets.

II. REQUIREMENTS:

A. Material	Equal to or better than 200 lb. Single wall Corrugated Board, May be spliced (glued) to obtain box Dimension.
B. Type	RSC, International Box Code 0201
C. Flap gap	Outer flaps shall close and meet with no overlap and a gap no greater than ¼"
D. Joint	Glue tab (Glue preferred for box "Adhesive, Hot Melt" ETOB National Starch and Chemical Co. Instant Lok 342616).
E. Certification Seal	Must have 200 lb Certification Seal or equivalent per U.S. DOT Regulations 49 CFR. 178.3 & 178.503 and Interstate Commerce Freight Classifications. Located and visible on the purposed bottom of the box when assembled.
F. Text	The stock code numbers to be printed or embossed and hidden when assembled. Either by print or embossing the phrase "DO NOT USE KNIFE" shall be in plain view.
G. Compatibility	Must be compatible with Partition 92700-018, 92700-020 and 92700-019. Text "THIS SIDE UP" minimum text height of 1" ± ¼, letters to be upper case. Location of TEXT and ARROWS to be with a gap of 3 /4 " from top fold line of the largest two panels and centered.

ORIGIN DATE	DESCRIPTION	DOCUMENT NO.
June 18, 2004	CORRUGATED RSC BOX 11 X 11 X 7	92500-113
GENERATED BY		RELEASE DATE
J HUGHES		
ERN NO		REVISION NO.
		8

ENGINEERING SPECIFICATION
STATE OF INDIANA
DEPARTMENT OF CORRECTION
PEN PRODUCTS

H. Graphics — ARROWS pointing away from Certification seal. Arrows to be minimum height of 1 ½" ± ¼, and be symmetrical about Text 'THIS SIDE UP"

I. Size (internal dimensions) — Length 11.0 +/ - 3/16
Width 11.0 +/ - 3/16
Height 7.0 +/ - 3/16

III PROCUREMENT:

A. Packaging/Shipping
Per purchase order

B. Reference — 1992 Fiber Box Handbook
Fiber Box Association

C. Method of Specifying — 92500-113

ORIGIN DATE	DESCRIPTION	DOCUMENT NO.
June 18, 2004	CORRUGATED RSC BOX 11 X 11 X 7	92500-113
GENERATED BY J HUGHES		RELEASE DATE
ERN NO		REVISION NO. 8

ENGINEERING SPECIFICATION
STATE OF INDIANA
DEPARTMENT OF CORRECTION
PEN PRODUCTS

I. OBJECTIVE:

To provide a corrugated shipping box for cleaning products.

II. REQUIREMENTS:

A. Material	Equal to or better than 200 lb. Single wall Corrugated Board, May be spliced (glued) to obtain box Dimension.
B. Type	RSC, International Box Code 0201
C. Flap gap	Outer flaps shall close and meet with no overlap and a gap no greater than ¼"
D. Joint	Glue tab (Glue preferred for box "Adhesive, Hot Melt" ETOB National Starch and Chemical Co. Instant Lok 342616).
E. Certification Seal	Must have 200 lb Certification Seal or equivalent per U.S. DOT Regulations 49 CFR. 178.3 & 178.503 and Interstate Commerce Freight Classifications. Located and visible on the purposed bottom of the box when assembled.
F. Text	The stock code numbers to be printed or embossed and hidden when assembled. Either by print or embossing the phrase "DO NOT USE KNIFE" shall be in plain view.
G. Compatibility	Must be compatible with Partition 92700-018, 92700-020 and 92700-019. Text "THIS SIDE UP" minimum text height of 1" ± ¼, letters to be upper case. Location of TEXT and ARROWS to be with a gap of 3 /4 " from top fold line of the largest two panels and centered.

ORIGIN DATE	DESCRIPTION	DOCUMENT NO.
May 14, 2004	CORRUGATED RSC BOX 11 X 7 1/2 X 10	92500-117
GENERATED BY		RELEASE DATE
E. KOLESNIKOV		08/02/07
ERN NO		REVISION NO.
		NR

ENGINEERING SPECIFICATION
STATE OF INDIANA
DEPARTMENT OF CORRECTION
PEN PRODUCTS

H. Graphics — ARROWS pointing away from Certification seal. Arrows to be minimum height of 1 ½" ± ¼, and be symmetrical about Text 'THIS SIDE UP"

I. Size (internal dimensions) — Length 11.0 +/ - 3/16
Width 7 1/2 +/ - 3/16
Height 10.0 +/ - 3/16

III PROCUREMENT:

A. Packaging/Shipping
Per purchase order

B. Reference — 1992 Fiber Box Handbook
Fiber Box Association

C. Method of Specifying — 92500-117

ORIGIN DATE	DESCRIPTION	DOCUMENT NO.
May 14, 2004	CORRUGATED RSC BOX 11 X 7 1/2 X 10	92500-117
GENERATED BY		RELEASE DATE
E. KOLESNIKOV		08/02/07
ERN NO		REVISION NO.
		NR

PRINT/DIE KEY

LABEL	I.D. NO.	SIZE	DESCRIPTION
AA	N/A	3 1/2 - 7 X 3/4	STENCIL
BB	V 7296-026	2" DIA	2" 200# CERTIFICATE SEAL

DIMENSIONAL NOTES

ALL BOX DIMENSIONS ARE ±1/8 UNLESS OTHERWISE NOTED.

ALL PRINTING DIMENSIONS ARE ±1/4.

(*) INDICATES APPROXIMATE LOCATION OF BOX STOCK CODE STENCIL OR LABEL.

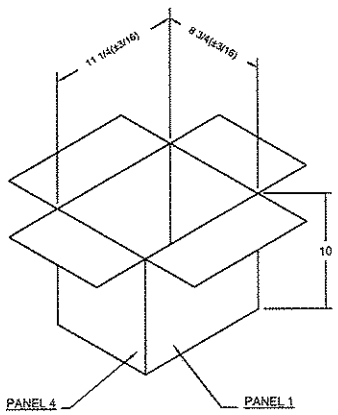

FLAP GAP NOTE:

ALL BOX FLAPS SHALL CLOSE AND MEET WITH NO OVERLAP AND A GAP NO GREATER THAN 1/4.

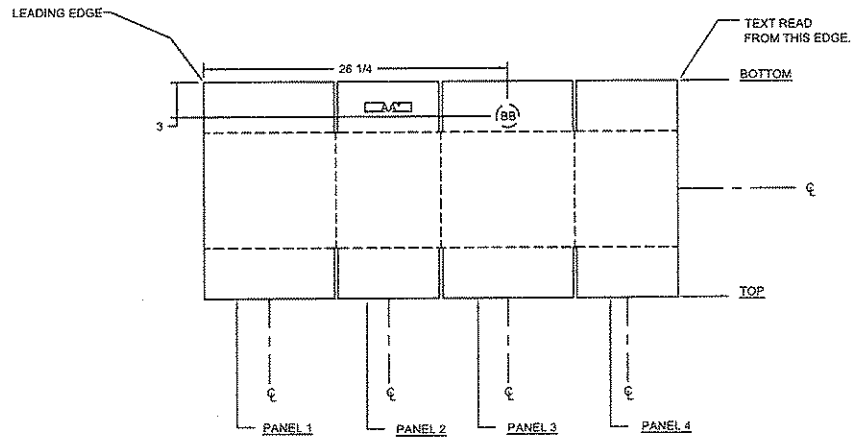

BOX PRINTING LAYOUT DRAWING

ASSEMBLED VIEW - ALL DIMENSIONS I.D

STYLE: RSC

TYPE: 200# S/W CORRUGATED BD. C - FLUTE

NOTES:

1. FOR LOCATION PURPOSES, ALL GRAPHICS ARE REPRESENTED BY RECTANGLES OR CIRCLES DRAWN AROUND THE OUTERMOST EDGES OF THE ARTWORK. DIMENSIONS ARE HELD TO THE CENTER-LINE OF THE SHAPES. REFERENCE GRAPHICS LOG FOR ACTUAL ARTWORK SAMPLES.

ITEM	STOCK CODE	QUANTITY	MATERIAL DESCRIPTION	DOCUMENT
4	00364-001	N/A	INK, FLEXO, BLACK	00364-000
3	00070-001	N/A	INK, STENCIL, DL-XLM, BLACK	00070-000
2	02057-001	N/A	TAPE, NON-ASPHALTIC, GUMMED, SEALING, RE-INFORCED THREE-WAY, 3	02057-000
1	00118-001	N/A	CORRUGATED BOARDS, S/W, C FLUTE, PARALLEL TO FIRST DIMENSION, 200#, 48 X 96	00118-000

WARNING: ALL INFORMATION CONTAINED WITHIN THIS PRINT IS CONFIDENTIAL AND IS THE PROPERTY OF INDIANA DEPT. OF CORRECTION. BY ACCEPTING THIS PRINT THE USER AGREES THAT IT SHALL NOT BE USED FOR ANY OTHER PURPOSE THAN THAT FOR WHICH IT WAS INTENDED.

REV	ERN	STATUS	DATE
NR	960041	NEW RELEASE	11/20/96

NOTES:

PEN PRODUCTS
Prison Enterprises Network

TOLERANCES:
FRACTION: AS NOTED | DECIMAL | ANGLE
OTHER DATA:

GENERATED BY: D. MEEHAN | PLOT SCALE: 3/32=1 | DRAWN ON: 5-30-96
RELEASE DATE: 11-20-96 | ERN: 960041

DESCRIPTION:
CORRUGATED BOX
11 1/4 X 8 3/4 X 10

DRAWING NUMBER: **92500-022** | REV: NR

PRINT/DIE KEY

LABEL	I.D. NO.	SIZE	DESCRIPTION
AA*	N/A	VARIES	STOCK CODE #
BB	V 7296-017	3 3/16 DIA	200# CERTIFICATION SEAL

DIMENSIONAL NOTES

ALL BOX DIMENSIONS ARE ±3/16 UNLESS OTHERWISE NOTED.
ALL PRINTING DIMENSIONS ARE ±1/4.

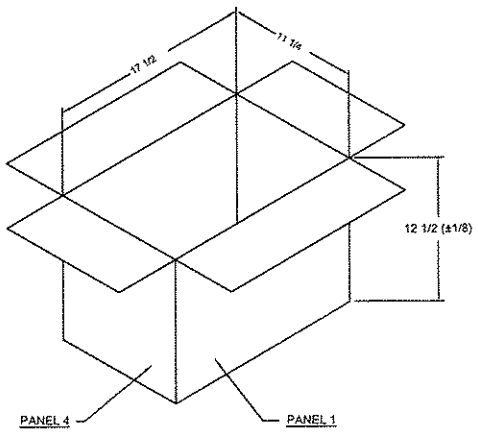

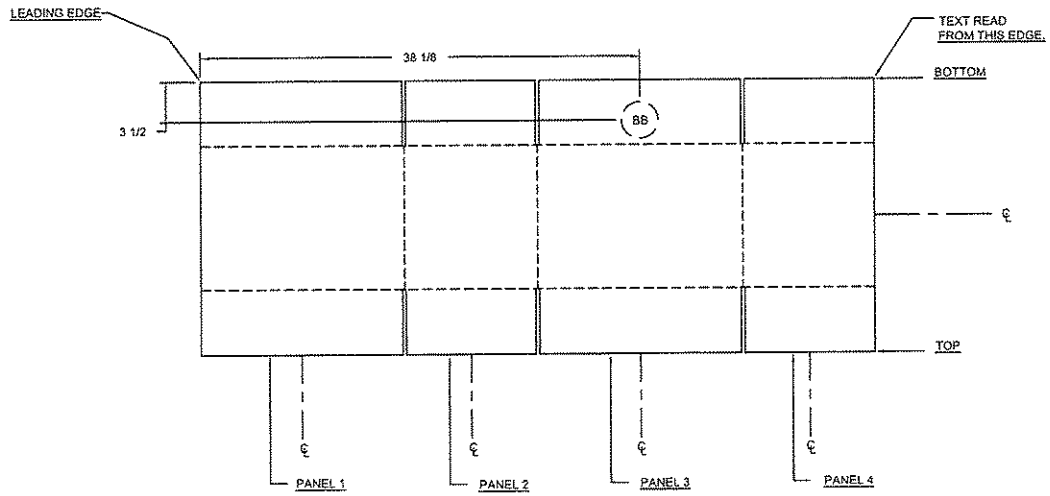

BOX PRINTING LAYOUT DRAWING

FLAP GAP NOTE:

ALL BOX FLAPS SHALL CLOSE AND MEET WITH NO OVERLAP AND A GAP NO GREATER THAN 1/4.

ASSEMBLED VIEW - ALL DIMENSIONS I.D

STYLE: RSC

TYPE: 200# S/W CORRUGATED BD. C - FLUTE

NOTES:

1. FOR LOCATION PURPOSES, ALL GRAPHICS ARE REPRESENTED BY RECTANGLES OR CIRCLES DRAWN AROUND THE OUTERMOST EDGES OF THE ARTWORK. DIMENSIONS ARE HELD TO THE CENTER-LINE OF THE SHAPES. REFERENCE GRAPHICS LOCATION FOR ACTUAL ARTWORK SAMPLES.

2*. THE STOCK CODE # TO BE HIDDEN WHEN FULLY ASSEMBLED.

ITEM	STOCK CODE	QUANTITY	MATERIAL DESCRIPTION	DOCUMENT
4	00364-001	N/A	INK, FLEXO BLACK	00364-000
3	00070-001	N/A	INK, STENCIL, DL-XLM, BLACK	00070-000
2	02057-001	N/A	TAPE, NON-ASPHALTIC, GUMMED SEALING, RE-INFORCED THREE-WAY, 3	02057-000
1	00119-001	N/A	CORRUGATED BOARD, S/W, C FLUTE, PARALLEL TO FIRST DIMENSION, 200#, 49-1/4X60-5/8	00113-000

WARNING: ALL INFORMATION CONTAINED WITHIN THIS PRINT IS CONFIDENTIAL AND IS THE PROPERTY OF INDIANA DEPT. OF CORRECTION. BY ACCEPTING THIS PRINT THE USER AGREES THAT IT SHALL NOT BE USED FOR ANY OTHER PURPOSE THAN THAT FOR WHICH IT WAS INTENDED.

REV	ERN	STATUS	DATE
NR	980048	NEW RELEASE	9-14-98

NOTES:

PRODUCTS
Prison Enterprises Network

TOLERANCES:
GENERATED BY: D. MEEHAN
PLOT SCALE: 3/32=1
ORIGIN DATE: 5-30-97
FRACTION: AS NOTED
DECIMAL:
ANGLE:
REVISED DATE: 9-14-98
FILE: 980048
OTHER DATA:
DESCRIPTION: CORRUGATED BOX
17 1/2 X 11 1/4 X 12 1/2
DRAWING NUMBER: 92500-025
REV: NR

PRINT/DIE KEY

LABEL	I.D. NO.	SIZE	DESCRIPTION
AA*	N/A	VARIES	STOCK CODE #
BB	V 7296-017	3 3/16 DIA	200# CERTIFICATION SEAL
CC	V 7296-022	6 1/2 X 1 1/2	THIS SIDE UP

DIMENSIONAL NOTES

ALL BOX DIMENSIONS ARE ±3/16 UNLESS OTHERWISE NOTED.
ALL PRINTING DIMENSIONS ARE ±1/4.

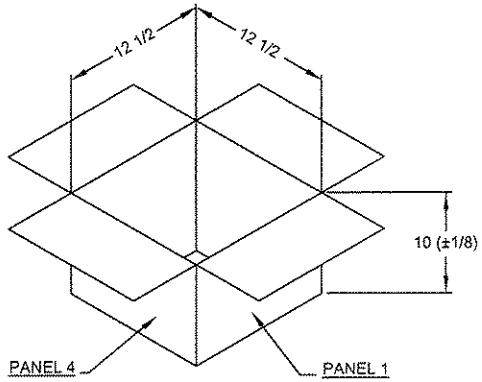

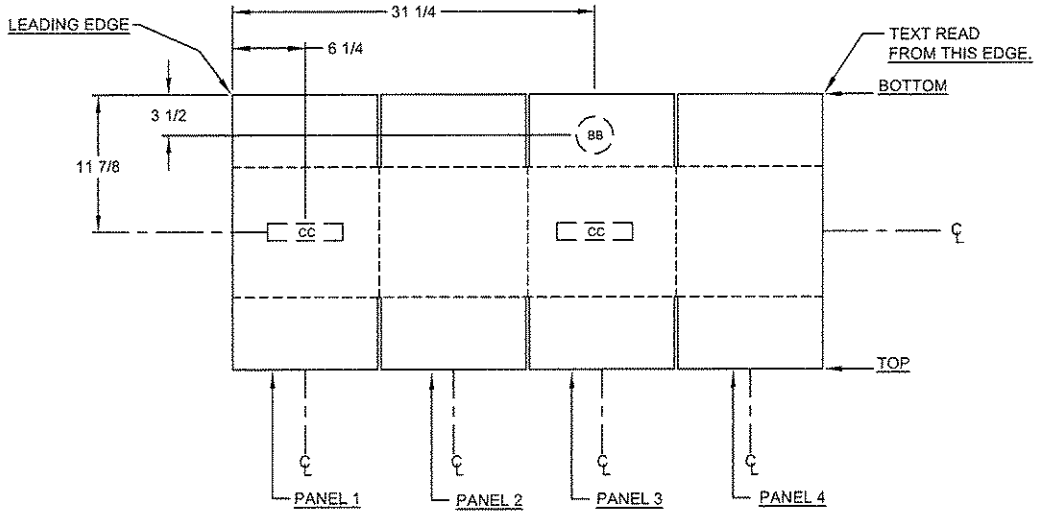

FLAP GAP NOTE:
ALL BOX FLAPS SHALL CLOSE AND MEET WITH NO OVERLAP AND A GAP NO GREATER THAN 1/4.

BOX PRINTING LAYOUT DRAWING

ASSEMBLED VIEW - ALL DIMENSIONS I.D
STYLE: RSC
TYPE: 200# S/W CORRUGATED BD. C - FLUTE

NOTES:
1. FOR LOCATION PURPOSES, ALL GRAPHICS ARE REPRESENTED BY RECTANGLES OR CIRCLES DRAWN AROUND THE OUTERMOST EDGES OF THE ARTWORK. DIMENSIONS ARE HELD TO THE CENTER-LINE OF THE SHAPES. REFERENCE GRAPHICS LOCATION FOR ACTUAL ARTWORK SAMPLES.

2*. THE STOCK CODE # TO BE HIDDEN WHEN FULLY ASSEMBLED.

ITEM	STOCK CODE	QUANTITY	MATERIAL DESCRIPTION	DOCUMENT
4	00364-001	N/A	INK, FLEXO BLACK	00364-000
3	00070-001	N/A	INK, STENCIL, DL-XLM, BLACK	00070-000
2	02057-001	N/A	TAPE, NON-ASPHALTIC, GUMMED SEALING, RE-INFORCED THREE-WAY, 3	02057-000
1	00068-001	N/A	CORRUGATED BOARD, S/W, C FLUTE, PARALLEL TO FIRST DIMENSION, 200#, 75X105	00113-000

WARNING: ALL INFORMATION CONTAINED WITHIN THIS PRINT IS CONFIDENTIAL AND IS THE PROPERTY OF INDIANA DEPT. OF CORRECTION. BY ACCEPTING THIS PRINT THE USER AGREES THAT IT SHALL NOT BE USED FOR ANY OTHER PURPOSE THAN THAT FOR WHICH IT WAS INTENDED.

REV	ERN	STATUS	DATE
B	000064	CHANGE SIZE OF BOX (REFERENCE ECR #F0063)	7/28/00
A	000046	CHANGE SIZE OF BOX (REFERENCE ECR #F0060)	5/23/00
NR	980048	NEW RELEASE	9-14-98

NOTES:

PEN PRODUCTS
Prison Enterprises Network

TOLERANCES:
GENERATED BY: K.CARTER
PLOT SCALE: 3/32=1
CHECKED: 8-16-96
FINISH: AS NOTED
RELEASE DATE: 7/28/00
DIM: 000064
OTHER DATA:
DESCRIPTION: CORRUGATED BOX 12-1/2X12-1/2X10
DRAWING NUMBER: 92500-048
REV: B

PRINT/DIE KEY

LABEL	I.D. NO.	SIZE	DESCRIPTION
AA*	N/A	VARIES	STOCK CODE #
BB	V 7296-026	2 DIA	200# CERTIFICATION SEAL

DIMENSIONAL NOTES

ALL BOX DIMENSIONS ARE ±3/16 UNLESS OTHERWISE NOTED.
ALL PRINTING DIMENSIONS ARE ±1/4.

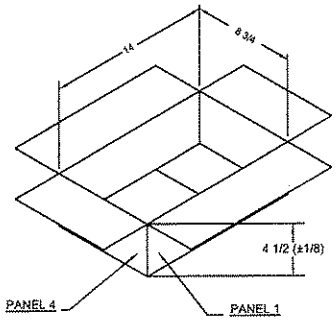

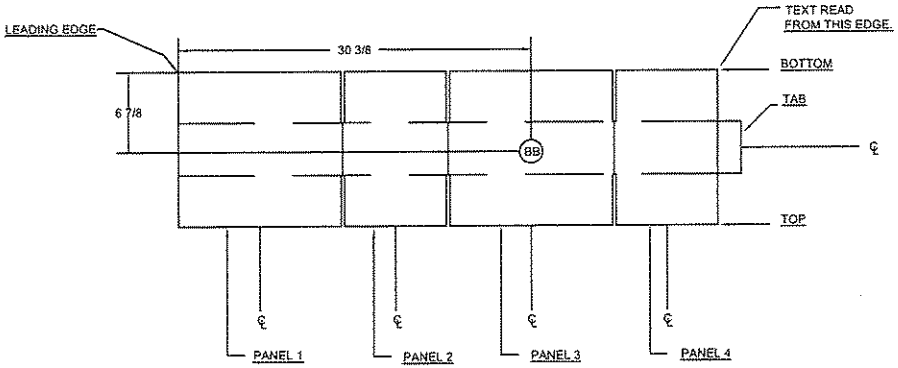

BOX PRINTING LAYOUT DRAWING

FLAP GAP NOTE:

ALL BOX FLAPS SHALL CLOSE AND MEET WITH NO OVERLAP AND A GAP NO GREATER THAN 1/4.

ASSEMBLED VIEW - ALL DIMENSIONS I.D

STYLE: RSC

TYPE: 200# S/W CORRUGATED BD. C - FLUTE

NOTES:

1. FOR LOCATION PURPOSES, ALL GRAPHICS ARE REPRESENTED BY RECTANGLES OR CIRCLES DRAWN AROUND THE OUTERMOST EDGES OF THE ARTWORK. DIMENSIONS ARE HELD TO THE CENTER-LINE OF THE SHAPES. REFERENCE GRAPHICS LOCATION FOR ACTUAL ARTWORK SAMPLES.

2*. THE STOCK CODE # TO BE HIDDEN WHEN FULLY ASSEMBLED.

ITEM	STOCK CODE	QUANTITY	MATERIAL DESCRIPTION	DOCUMENT
2	00070-001	N/A	INK, STENCIL, DL-XLM, BLACK	00070-000
1	00118-001	N/A	CORRUGATED BOARD, S/W, C FLUTE, PARALLEL TO FIRST DIMENSION, 200#, 48X96	00118-001

WARNING: ALL INFORMATION CONTAINED WITHIN THIS PRINT IS CONFIDENTIAL AND IS THE PROPERTY OF INDIANA DEPT. OF CORRECTION. BY ACCEPTING THIS PRINT THE USER AGREES THAT IT SHALL NOT BE USED FOR ANY OTHER PURPOSE THAN THAT FOR WHICH IT WAS INTENDED.

REV	ERN	STATUS	DATE

NOTES:

PEN PRODUCTS
Prison Enterprises Network

TOLERANCES: | DRAWN BY: D. MEEHAN | PLOT SCALE: 3/32=1 | DRAWN DATE: 11-19-96

FINISH: AS NOTED | MATERIAL | ANGLE | MATERIAL DATE | TIME

OTHER DATA:

DESCRIPTION: CORRUGATED BOX 14 X 8 3/4 X 4 1/2

DRAWING NUMBER: 92500-058 | REV

PRINT/DIE KEY

LABEL	I.D. NO.	SIZE	DESCRIPTION
AA*	N/A	VARIES	STOCK CODE #
BB	V 7296-026	2	200# CERTIFICATION SEAL

DIMENSIONAL NOTES

ALL BOX DIMENSIONS ARE ±3/16 UNLESS OTHERWISE NOTED.
ALL PRINTING DIMENSIONS ARE ±1/4

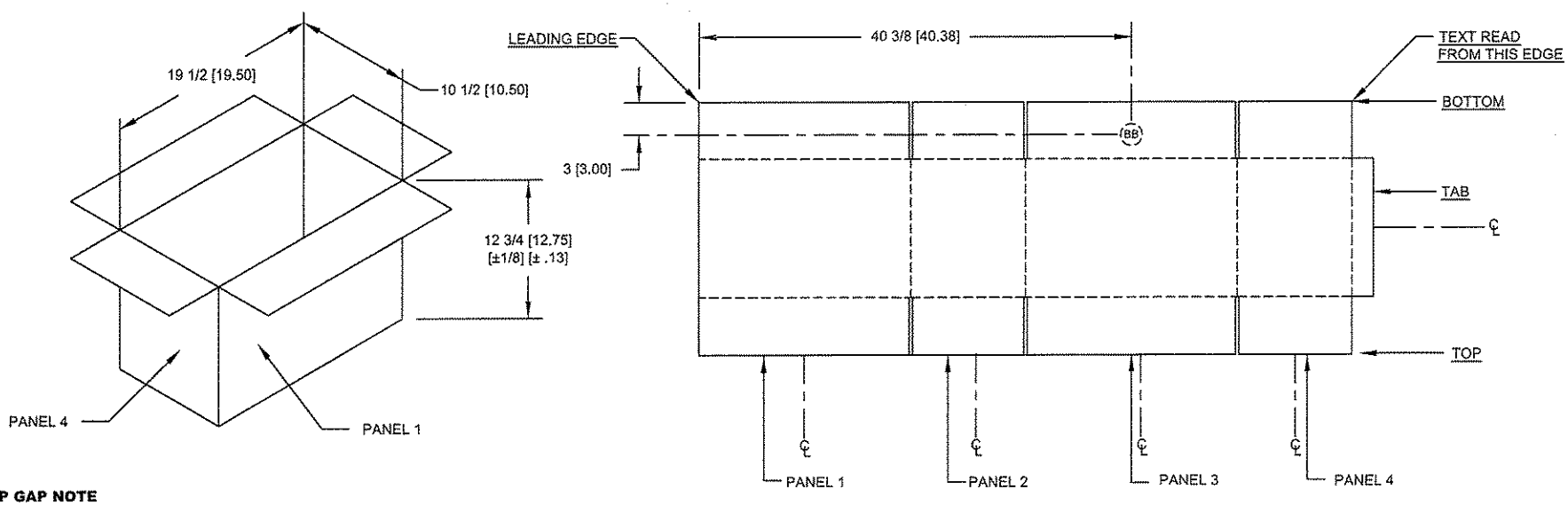

BOX PRINTING LAYOUT DRAWING

FLAP GAP NOTE

ALL BOX FLAPS SHALL CLOSE AND MEET WITH NO OVERLAP AND GAP NO GREATER THAN 1/4.

ASSEMBLED VIEW-ALL DIMENSIONS I.D.

STYLE: RSC
TYPE:200# S/W CORRUGATED BD. C-FLUTE

NOTES:

1. FOR LOCATION PURPOSES, ALL GRAPHICS ARE REPRESENTED BY RECTANGLES OR CIRLES DRAWN AROUND THE OUTERMOST EDGES OF THE ARTWORK. DIMENSIONS HELD TO THE CENTERLINE OF THE SHAPES. REFERENCE GRAPHICS LOCATION FOR ACTUAL ARTWORK SAMPLES.

2* THE STOCKCODE # TO BE HIDDEN WHEN FULLY ASSEMBLED.

3. THE "XXXXX-XXX" ON THIS DRAWING WILL BE REPLACED WITH THE PROPER SIZE CORRUGATED BOARD SELECTION NUMBER. REFERENCE THE BILL OF MATERIAL.

SEE NOTE #3

ITEM	STOCK CODE	QUANTITY	MATERIAL DESCRIPTION	DOCUMENT
4	XXXXX-XXX	N/A	CORRUGATED BOARD, S/W, FLUTE	00113-000
3	00364-001	N/A	INK, FLEXO BLACK	00364-000
2	00302-001	N/A	ADHESIVE, HOT MELT, FREEZER PACKAGING	00302-000
1	00070-001	N/A	INK, STENCIL, DL-XLM, BLACK	00070-000

WARNING: ALL INFORMATION CONTAINED WITHIN THIS PRINT IS CONFIDENTIAL AND IS THE PROPERTY OF INDIANA DEPT. OF CORRECTION. BY ACCEPTING THIS PRINT THE USER AGREES THAT IT SHALL NOT BE USED FOR ANY OTHER PURPOSE THAN THAT FOR WHICH IT WAS INTENDED.

REV	ERN	STATUS	DATE
NR	010052	NEW RELEASE	7/24/01

NOTES:

PEN PRODUCTS
Prison Enterprises Network

TOLERANCES: GENERATED BY: K.R.CARTER | PLOT SCALE: 3/32 | CHECK DATE: 03/05/01
FRACTION: AS NOTED | DECIMAL: AS NOTED | ANGLE: | RELEASE DATE: 7/24/01 | DWN: 010052
OTHER DATA:
DESCRIPTION: BOX, RSC, 19-1/2 X 10-1/2 X 12-3/4
DRAWING NUMBER: 92500-102 | REV: NR

PRINT/DIE KEY

LABEL	I.D. NO.	SIZE	DESCRIPTION
AA*	N/A	VARIES	STOCK CODE #
BB	V7296-017	3 3/16 DIA.	200# CERTIFICATION SEAL
CC	V 7296-067	2 1/2 X 1 11/16	INDIANA INSPECTION STAMP
DD	V 7296-009	2 5/8 X 5/16	KEEP FROZEN
EE	V 7296-007	2 7/8 X 3/8	NEW WEIGHT
FF	V 7296-010	4 3/4 X 3 1/2	SAFE HANDLING INSTRUCTIONS
GG	N/A	3-1/2-7 X 3/4	PEN PRODUCTS ADDRESS
HH	V 7296-097	2 1/2 X 1 11/16	INDIANA INSPECTION STAMP

DIMENSIONAL NOTES

ALL BOX DIMENSIONS ARE ± 3/16 UNLESS OTHERWISE NOTED.

ALL PRINTING DIMENSIONS ARE ±1/4.

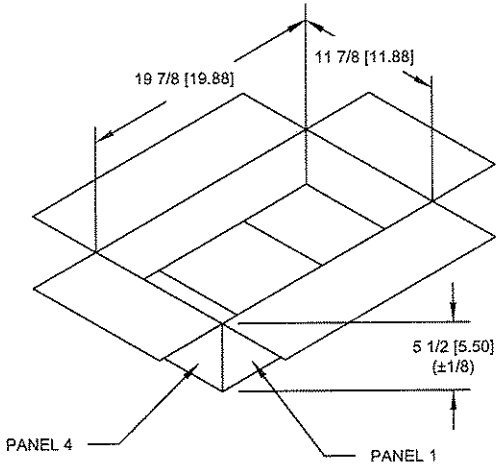

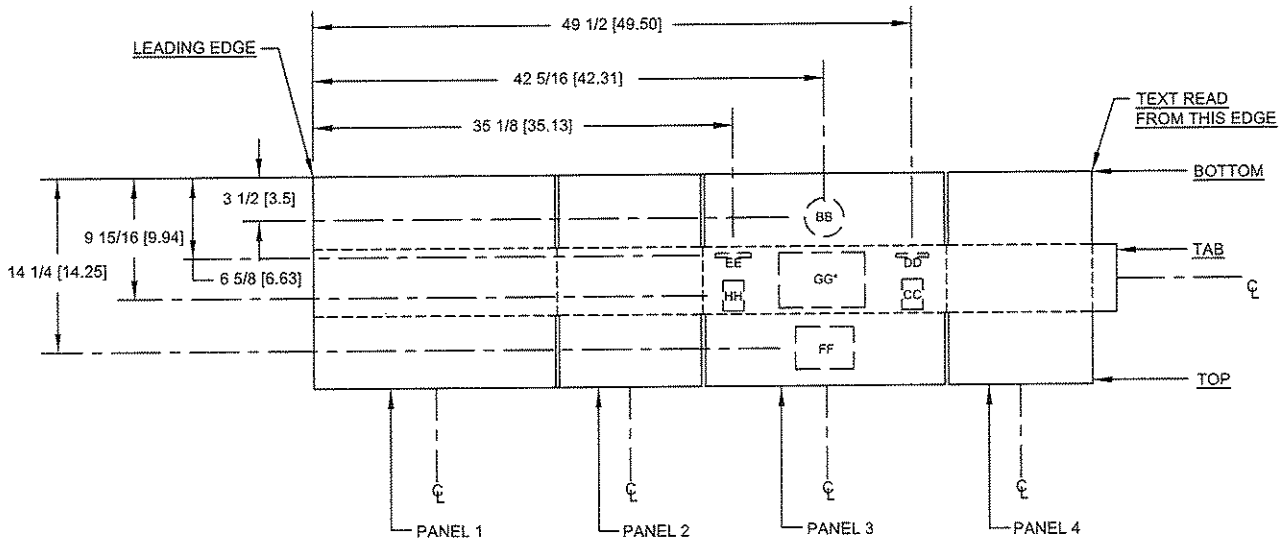

BOX PRINTING LAYOUT DRAWING

FLAP GAP NOTE:
ALL BOX FLAPS SHALL CLOSE AND MEET WITH NO OVERLAP AND A GAP NO GREATER THAN 1/4 [.25]

ASSEMBLED VIEW ALL DIMENSIONS I.D.
STYLE: RSC
TYPE: 200# S/W CORRUGATED BD. C-FLUTE

NOTES:

1. FOR LOCATION PURPOSES, ALL GRAPHICS ARE REPRESENTED BY RECTANGLES OR CIRCLES DRAWN AROUND THE OUTERMOST EDGES OF THE ARTWORK. DIMENSIONS ARE HELD TO THE CENTERLINE OF THE SHAPES. REFERENCE THE GRAPHICS LOG FOR ACTUAL ARTWORK SAMPLES.
2*. THE STOCKCODE # TO BE HIDDEN WHEN FULLY ASSEMBLED.
3. THE "XXXXX-XXX" STOCKCODE ON THIS DRAWING WILL BE REPLACED WITH THE PROPER SIZE CORRUGATE BOARD SELECTION NUMBER. REFERENCE THE BILL OF MATERIALS.

SEE NOTE #3

ITEM	STOCK CODE	QUANTITY	MATERIAL DESCRIPTION	DOCUMENT
4	00364-001	N/A	INK, FLEXO, BLACK	00364-000
3	00302-001	N/A	ADHESIVE, HOT MELT, FREEZER PACKAGING	00302-000
2	XXXXX-XXX	N/A	CORRUGATED BOARD, S/W, C FLUTE, PARALLEL TO FIRST DIMENSION, 200#	00113-000
1	00070-001	N/A	INK, STENCIL, DL-XLM, BLACK	00070-000

WARNING: ALL INFORMATION CONTAINED WITHIN THIS PRINT IS CONFIDENTIAL AND IS THE PROPERTY OF INDIANA DEPT. OF CORRECTION. BY ACCEPTING THIS PRINT THE USER AGREES THAT IT SHALL NOT BE USED FOR ANY OTHER PURPOSE THAN THAT FOR WHICH IT WAS INTENDED.

REV	ERN	STATUS	DATE
NR	010043	NEW RELEASE	6/27/01

NOTES:

PEN PRODUCTS
Prison Enterprises Network

TOLERANCES: AS NOTED | AS NOTED | DESIGNED BY: K.R. CARTER | PLOT SCALE: 1/16 | DRAWN DATE: 03/14/01
RELEASE DATE: 6/27/01 | DATE: 010043
OTHER DATA:
DESCRIPTION: BOX, RSC, 19 7/8 X 11 7/8 X 5 1/2
DRAWING NUMBER: 92500-103 | REV: NR

PRINT/DIE KEY

LABEL	I.D. NO.	SIZE	DESCRIPTION
AA	N/A	3 1/2 - 7 x 3/4	STENCIL
BB	V 7296-017	3 3/16" DIA	3" 200# CERTIFICATE SEAL
CC	V 7296-018	7" X 4 1/2"	RECTANGLE LABEL BRKTS
DD	V 7296-022	6 1/2" X 1 1/2	1 1/2" THIS SIDE UP
EE	V 7296-032	1 1/2" X 2"	UP

DIMENSIONAL NOTES

ALL BOX DIMENSIONS ARE ±1/8 UNLESS OTHERWISE NOTED.

ALL PRINTING DIMENSIONS ARE ±1/4.

(*) INDICATES APPROXIMATE LOCATION OF BOX STOCK CODE STENCIL OR LABEL.

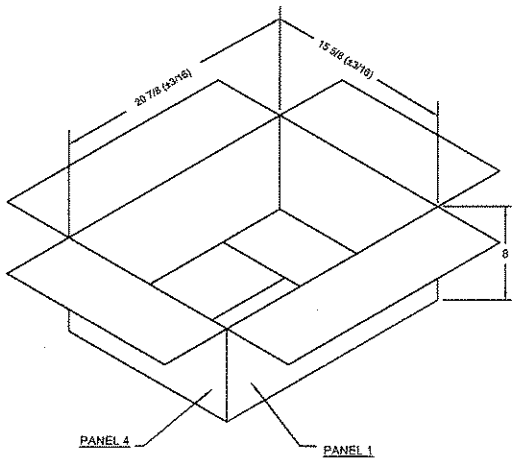

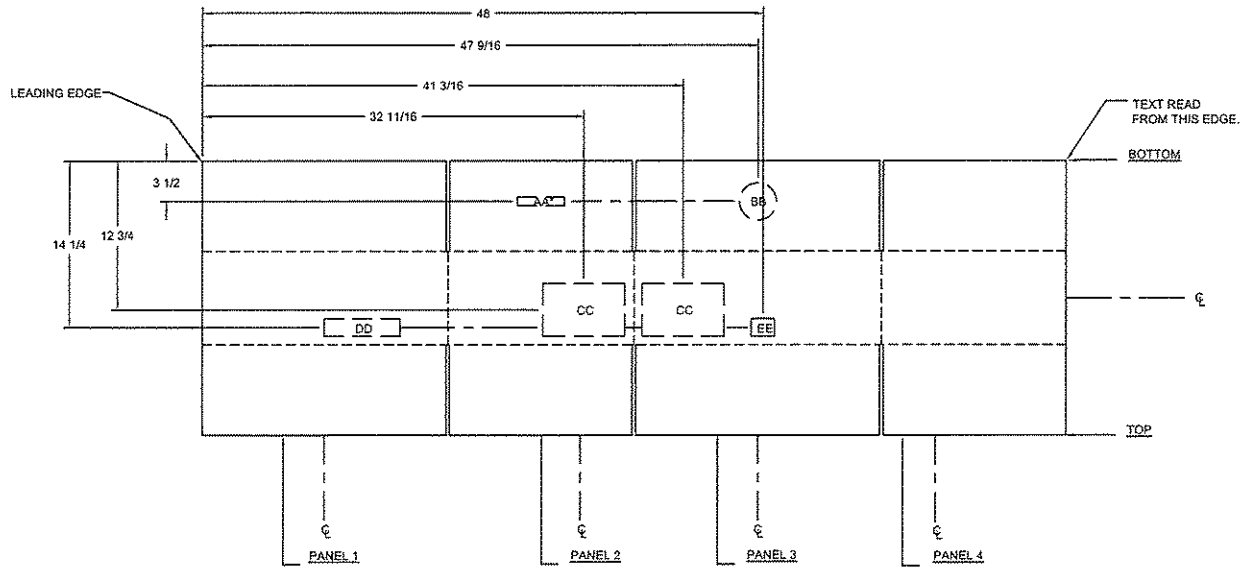

BOX PRINTING LAYOUT DRAWING

FLAP GAP NOTE:

ALL BOX FLAPS SHALL CLOSE AND MEET WITH NO OVERLAP AND A GAP NO GREATER THAN 1/4.

ASSEMBLED VIEW - ALL DIMENSIONS I.D

STYLE: RSC

TYPE: 200# S/W CORRUGATED BD. C - FLUTE

NOTES:

1. FOR LOCATION PURPOSES, ALL GRAPHICS ARE REPRESENTED BY RECTANGLES OR CIRCLES DRAWN AROUND THE OUTERMOST EDGES OF THE ARTWORK. DIMENSIONS ARE HELD TO THE CENTER-LINE OF THE SHAPES. REFERENCE GRAPHICS LOG FOR ACTUAL ARTWORK SAMPLES.

ITEM	STOCK CODE	QUANTITY	MATERIAL DESCRIPTION	DOCUMENT
4	00364-001	N/A	INK, FLEXO BLACK	00364-000
3	00070-001	N/A	INK, STENCIL, DI-XLM, BLACK	00070-000
2	02057-001	N/A	TAPE, NON-ASPHALTIC, GUMMED SEALING, RE-INFORCED THREE-WAY, 3	02057-000
1	00122-001	N/A	CORRUGATED BOARD, S/W, C FLUTE, PARALLEL TO FIRST DIMENSION, 200# 77-1/4 X 78-1/8	00122-000

WARNING: ALL INFORMATION CONTAINED WITHIN THIS PRINT IS CONFIDENTIAL AND IS THE PROPERTY OF INDIANA DEPT. OF CORRECTION. BY ACCEPTING THIS PRINT THE USER AGREES THAT IT SHALL NOT BE USED FOR ANY OTHER PURPOSE THEN THAT FOR WHICH IT WAS INTENDED.

REV	ERN	STATUS	DATE
NR	960038	NEW RELEASE	11/20/96

NOTES:

PEN PRODUCTS
Prison Enterprises Network

TOLERANCES:

GENERATED BY: D. MEEHAN | PLOT SCALE: 3/32 = 1 | DRAWN BY: 5-15-96

FRACTION: AS NOTED | DECIMAL: | ANGLE:

REVISION DATE: 10-29-96 | SIZE: 960038

OTHER DATA:

DESCRIPTION: CORRUGATED BOX 20 7/8 X 15 5/8 X 8

DRAWING NUMBER: 92500-011 | REV: NR

DIMENSIONAL NOTES

ALL BOX DIMENSIONS ARE ± 3/16 UNLESS OTHERWISE NOTED.

ALL PRINTING DIMENSIONS ARE ±1/4

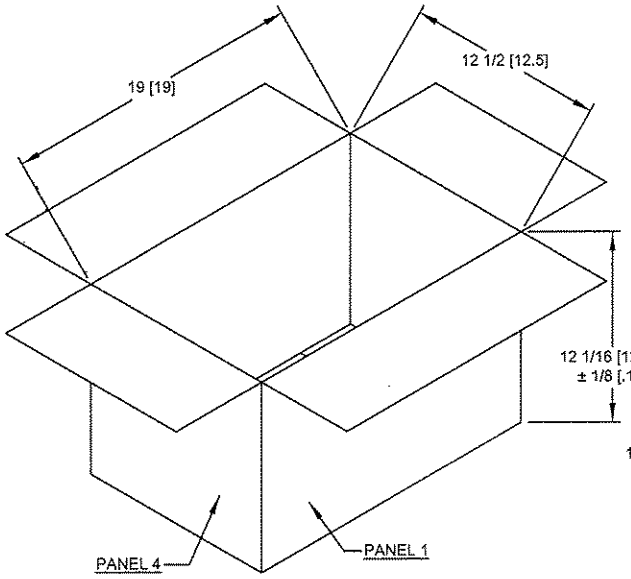

ASSEMBLED VIEW - ALL DIMENSIONS I.D

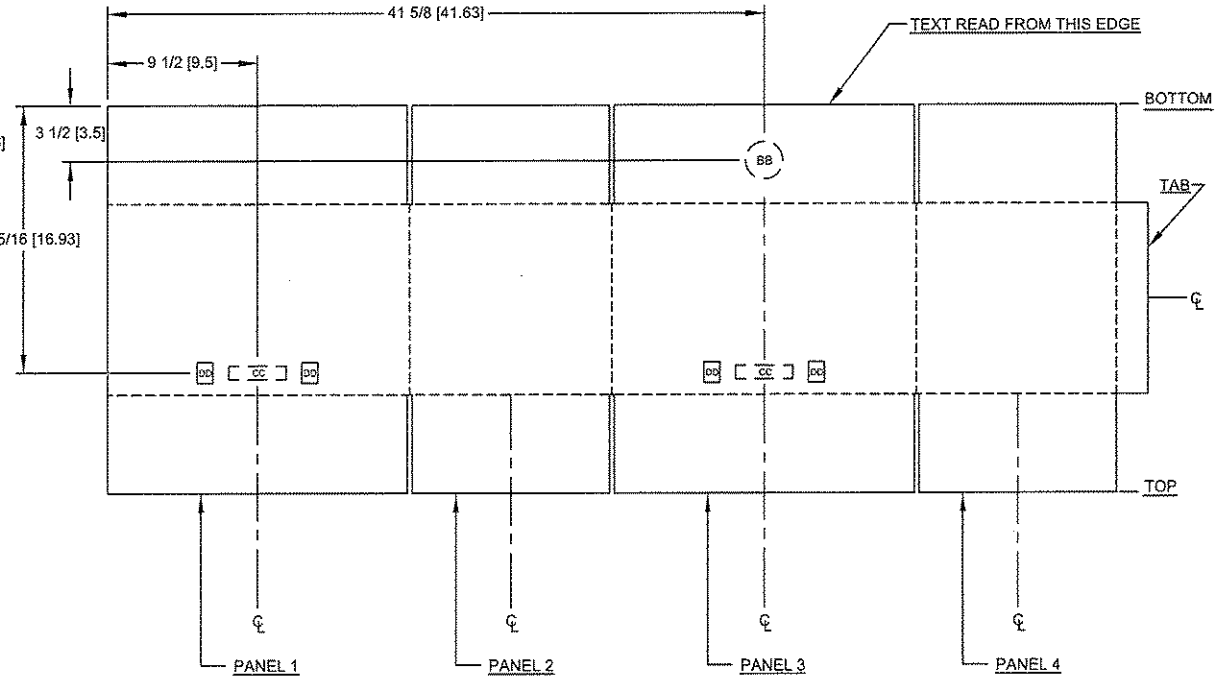

BOX PRINTING LAYOUT DRAWING

BOX PHYSICALS

STYLE: RSC

MATERIAL: EQUAL TO OR BETTER THAN #200 S/W CORRUGATED BOARD. MAY BE SPLICED (GLUED) TO OBTAIN BOX DIMENSIONS.

FLAP GAP: OUTER FLAPS SHALL CLOSE AND MEET WITH NO OVERLAP AND A GAP NO GREATER THAN 1/4"

JOINT: GLUE TAB (GLUE PREFERRED FOR BOX" ADHESIVE, HOT MELT" ETOB NATIONAL STARCH AND CHEMICAL CO. INSTANT LOK 34-2616)

GRAPHICS & FINISHING

1. FOR LOCATION PURPOSES, ALL GRAPHICS ARE REPRESENTED BY RECTANGLES OR CIRCLES DRAWN AROUND THE OUTERMOST EDGES OF THE ARTWORK. DIMENSIONS ARE HELD TO THE CENTER-LINE OF THE SHAPES. REFERENCE GRAPHICS LOCATION FOR ACTUAL ARTWORK SAMPLES.
2. THE STOCK CODE # TO BE PRINTED OR EMBOSSED AND HIDDEN WHEN ASSEMBLED
3. BB = 200 LB. CERTIFICATION SEAL OR EQUIVALENT PER U.S. DOT REGULATION 49 CFR 178.3 & 178.503 AND INTERSTATE COMMERCE FREIGHT CLASSIFICATIONS.
4. CC= TEXT " THIS SIDE UP" MINIMUM TEXT HEIGHT OF 1". LETTERS TO BE IN UPPER CASE.
5. DD= ARROWS POINTING AWAY FROM CERTIFICATION SEAL. ARROWS TO BE A MINIMUM HEIGHT OF 1 1/2" AND BE SYMMETRICAL ABOUT "CC".

WARNING: ALL INFORMATION CONTAINED WITHIN THIS PRINT IS CONFIDENTIAL AND IS THE PROPERTY OF INDIANA DEPT. OF CORRECTION. BY ACCEPTING THIS PRINT THE USER AGREES THAT IT SHALL NOT BE USED FOR ANY OTHER PURPOSE THAN THAT FOR WHICH IT WAS INTENDED.

REV	ERN	STATUS	DATE
B	020019	REDRAWN WITH CHANGE SEE ECR (#M0012)	06/27/02
A	980056	MODIFIED DRAWING AND CHANGED ITEM #2 ON T-STRIP	10/28/98
NR	980048	NEW RELEASE	9/14/98

NOTES:

PEN PRODUCTS
Prison Enterprises Network

TOLERANCES:
GENERATED BY: MEEHAN/HUGHES
PLOT SCALE: 1/8
DESIGN DATE: 5/21/97
FINISH: AS NOTED
DESIGN: AS NOTED
ANGLE
RELEASE DATE: 07/18/02
DWG: 020019
OTHER DATA:
DESCRIPTION: CORRUGATED BOX, 19 x 12 1/2 x 12 1/16
DRAWING NUMBER: 92500-013
REV: B

DIMENSIONAL NOTES

ALL PRINTING IS TO BE CENTERED IN PANEL

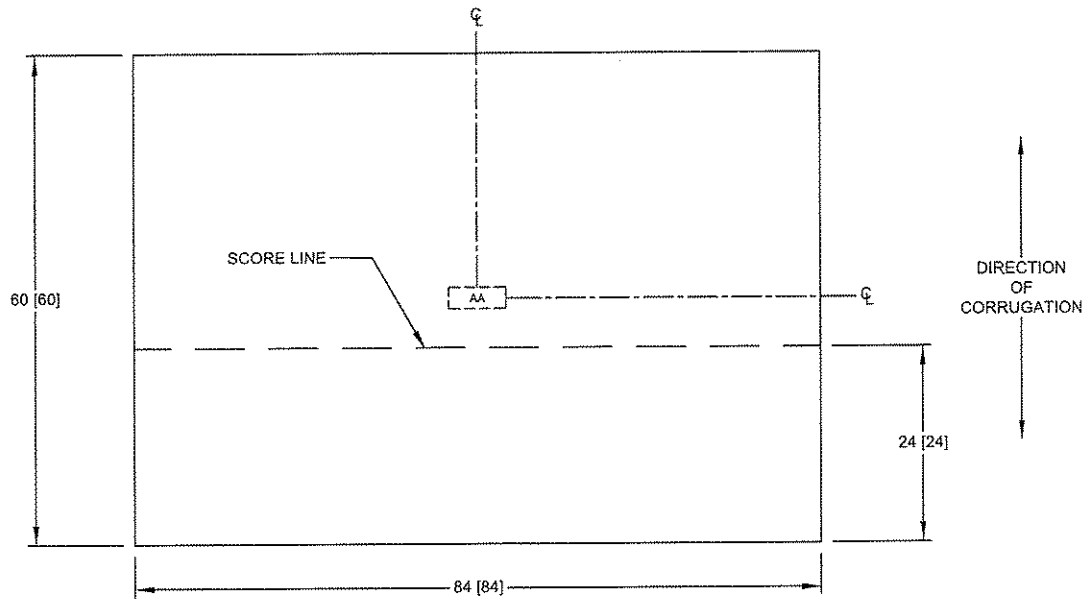

DIVIDER PRINTING LAYOUT DRAWING

BOX PHYSICALS

STYLE: IF - DIVIDER (PAD)
MATERIAL: EQUAL TO OR BETTER THAN 200# S/W CORRUGATED BOARD, C FLUTE, AND MAY BE SPLICED TO OBTAIN BOX DIMENSIONS.

GRAPHICS & FINISHING

1. FOR LOCATION PURPOSES, ALL GRAPHICS ARE REPRESENTED BY RECTANGLES OR CIRCLES DRAWN AROUND THE OUTERMOST EDGES OF THE ARTWORK. DIMENSIONS ARE HELD TO THE CENTER-LINE OF THE SHAPES. REFERENCE GRAPHICS LOCATION FOR ACTUAL ARTWORK SAMPLES.
2. THE STOCK CODE # "AA"TO BE PRINTED OR EMBOSSED ON ONE SIDE ONLY

WARNING: ALL INFORMATION CONTAINED WITHIN THIS PRINT IS CONFIDENTIAL AND IS THE PROPERTY OF INDIANA DEPT. OF CORRECTION. BY ACCEPTING THIS PRINT THE USER AGREES THAT IT SHALL NOT BE USED FOR ANY OTHER PURPOSE THAN THAT FOR WHICH IT WAS INTENDED.

REV	ERN	STATUS	DATE
A	020013	REDRAWN WITH UPDATE SEE (ECR # A0100)	06/07/02
NR	010050	NEW RELEASE	7/13/01

NOTES:

PEN PRODUCTS
Prison Enterprises Network

TOLERANCES: | GENERATED BY: CARTER/HUGHES | PLOT SCALE: 1/16 | DRAWN DATE: 06/07/02
FRACTION: ± 1/4 | DECIMAL: ± .25 | ANGLE: | MATERIAL DATE: 06/07/02 | ERN: 020013
OTHER DATA:
DESCRIPTION: DIVIDER 84 x 60
DRAWING NUMBER: 92600-022 | REV: A

STOCKCODE#	DIVIDER DIMS	
	DIM "A"	DIM "B"
92600-002	48-1/4	60-1/4
92600-003	48-1/4	48-1/4
92600-004	36-1/4	36-1/4
92600-005	30-1/4	30-1/4
92600-006	24-1/4	24-1/4
~~92600-007~~	18-1/4	24-1/4
~~92600-008~~	12-1/4	18-1/4
~~92600-009~~	15-1/4	21-1/4
92600-010	24-1/4	30-1/4
~~92600-011~~	18-1/4	18-1/4
~~92600-012~~	12-1/4	24-1/4
~~92600-016~~	23-1/2	23-1/2
92600-018	36-1/4	48-1/4
92600-025	27-1/2	25-1/2
92600-026	28-1/2	19-1/2
92600-028	22-1/2	22-1/2
92600-029	19-1/2	19-1/2
92600-030	40-1/2	20-1/2
92600-031	72-1/2	33-1/2
92600-032	55-1/2	27-1/2
92600-035	42-1/2	25-1/2
92600-036	81-1/2	25-1/2
92600-048	21-1/2	37-1/2
92600-049	18	18
92600-062	21-1/2	21-1/2
92600-066	42-1/2	30-1/2
92600-067	24-1/2	28-1/2
92600-068	60-1/2	18-1/2
92600-072	6-1/8	12
92600-074	37	37
92600-075	72	43
92600-077	51	43
92600-079	43	43
92600-080	31	31

DIMENSIONAL NOTES

ALL PRINTING IS TO BE CENTERED ON PANEL.

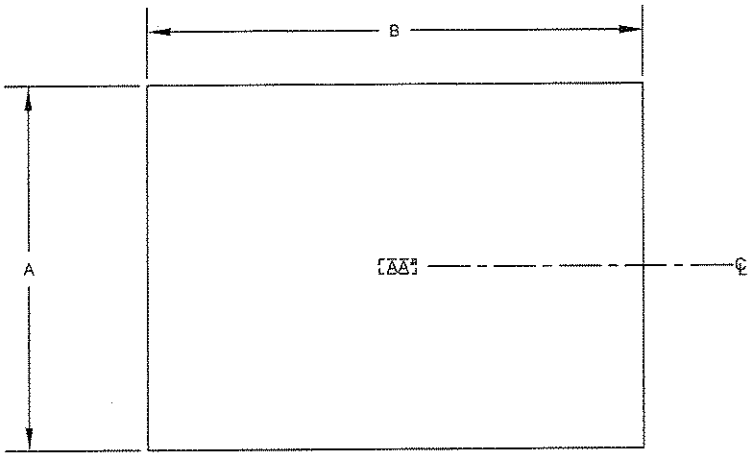

DIVIDER LAYOUT DRAWING

BOX PHYSICALS

STYLE: IF - DIVIDER (PAD)
MATERIAL: EQUAL TO OR BETTER THAN 200# S/W CORRUGATED BOARD, C FLUTE, AND MAY BE SPLICED TO OBTAIN BOX DIMENSIONS.

GRAPHICS & FINISHING

1. FOR LOCATION PURPOSES, ALL GRAPHICS ARE REPRESENTED BY RECTANGLES OR CIRCLES DRAWN AROUND THE OUTERMOST EDGES OF THE ARTWORK. DIMENSIONS ARE HELD TO THE CENTER-LINE OF THE SHAPES. REFERENCE GRAPHICS LOCATION FOR ACTUAL ARTWORK SAMPLES.
2. THE STOCK CODE # TO BE PRINTED OR EMBOSSED AND HIDDEN WHEN FULLY ASSEMBLED.

WARNING: ALL INFORMATION CONTAINED WITHIN THIS PRINT IS CONFIDENTIAL AND IS THE PROPERTY OF INDIANA DEPT. OF CORRECTION. BY ACCEPTING THIS PRINT THE USER AGREES THAT IT SHALL NOT BE USED FOR ANY OTHER PURPOSE THAN THAT FOR WHICH IT WAS INTENDED.

REV	ERN	STATUS	DATE
E	020013	UPDATED NOTES TO STANDARDS AND REMOVED (-078) SEE ECR # M0007)	06/06/02
D	010076	ADDED STOCKCODE AND MODIFIED NOTES (SEE ECR #E0280)	10/22/01
C	010059	MULTIPLE CHANGES (SEE ECR #F0076)	8/9/01
B	990016	ADDED THREE NEW STOCKCODE #'S	4/22/99
A	980031	RE-RELEASE DUE TO CHANGES (PER ECR #F0022)	5/28/98
NR	980028	NEW RELEASE	5/1/98

NOTES:

TOLERANCES: FRACTION ±1/4 DECIMAL ±.25 ANGLE
OTHER DATA:

DESIGNED BY: JOHNSON/CARTER
SCALE: 1/16=1
DRAWN DATE: 7/31/01
RELEASE DATE: 06/06/02
ECN: 020013

PEN PRODUCTS
Prison Enterprises Network

DESCRIPTION: CORRUGATED DIVIDERS

DRAWING NUMBER: 92600-000
REV: E

PRINT/DIE KEY

LABEL	I.D. NO.	SIZE	DESCRIPTION
AA*	N/A	VARIES	STOCK CODE #

DIMENSIONAL NOTES

ALL BOX DIMENSIONS ARE ±3/16 UNLESS OTHERWISE NOTED.
ALL PRINTING DIMENSIONS ARE ±1/4.

STOCKCODE	DUST COVER DIMENSIONS A	B
92800-001	16	21
92800-002	18	36
~~92800-003~~	18	72
92800-004	18	76
92800-005	24	36
~~92800-006~~	24	66
92800-007	24	72
~~92800-008~~	30	60
92800-009	30	66
92800-010	36	72
92800-011	24	12
92800-012	24	18
92800-013	24	24
92800-014	24	30
92800-015	24	42
92800-016	24	48
92800-017	24	54
92800-018	24	60
92800-019	18	66
92800-020	36	36
92800-021	40	40

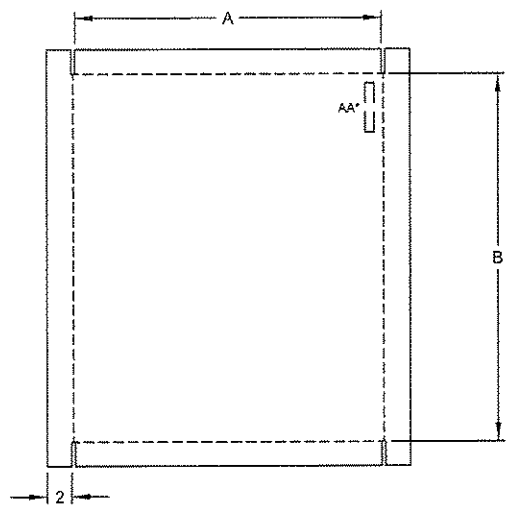

STYLE: IF (DUST COVER).

TYPE: 200# S/W CORRUGATED BD. C-FLUTE.

SEE NOTE #2
SEE NOTE #1

NOTES:

1. ITEM #1 USED ON EVERY DUST COVER TO PRINT STOCK CODE NUMBER.
2. THE "XXXXX-XXX" STOCK CODE ON THIS DRAWING WILL BE REPLACED WITH THE PROPER SIZE CORRUGATED BOARD SELECTION NUMBER. REFERENCE THE BILL OF MATERIAL.

ITEM	STOCK CODE	QUANTITY	MATERIAL DESCRIPTION	DOCUMENT
2	XXXXX-XXX	N/A	CORRUGATED BOARD, S/W, C FLUTE, PARALLEL TO FIRST DIMENSION, 200#	00113-000
1	00070-001	N/A	INK, STENCIL, DL-XLM, BLACK	

WARNING: ALL INFORMATION CONTAINED WITHIN THIS PRINT IS CONFIDENTIAL AND IS THE PROPERTY OF INDIANA DEPT. OF CORRECTION. BY ACCEPTING THIS PRINT THE USER AGREES THAT IT SHALL NOT BE USED FOR ANY OTHER PURPOSE THAN THAT FOR WHICH IT WAS INTENDED.

REV	ERN	STATUS	DATE
A	000092	CHANGED THE RAW MATERIAL FOR 92800-020 (SEE ECR #F0059).	12/6/00
NR	980036	NEW RELEASE	7/10/00

NOTES:

TOLERANCES:
FRACTION: ±3/16 DECIMAL ANGLE

OTHER DATA:

DESIGNED BY: D. MEEHAN
PLOT SCALE: 1/8=1
ORIGIN DATE: 1/31/97
RELEASE DATE: 12/6/00
ERN: 000092

PEN PRODUCTS
Prison Enterprises Network

DESCRIPTION: COVER CORRUGATED

DRAWING NUMBER: 92800-000
REV: A

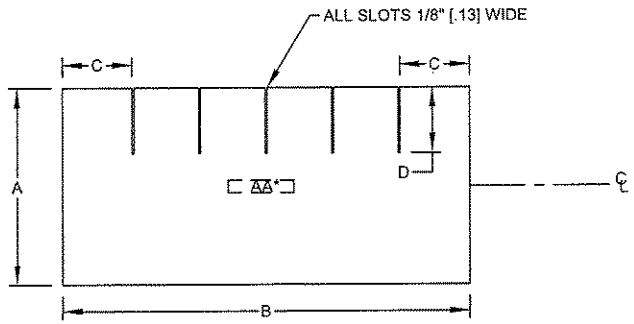

STOCKCODE #	DIVIDER DIMENSIONS			
	A	B	C	D
~~92700-001~~	7 3/4 [7.75]	15 1/2 [15.5]	2 1/2 [2.5]	4 1/2 [4.5]
92700-008	8 1/4 [8.25]	17 3/4 [17.75]	3 [3]	4 1/2 [4.5]

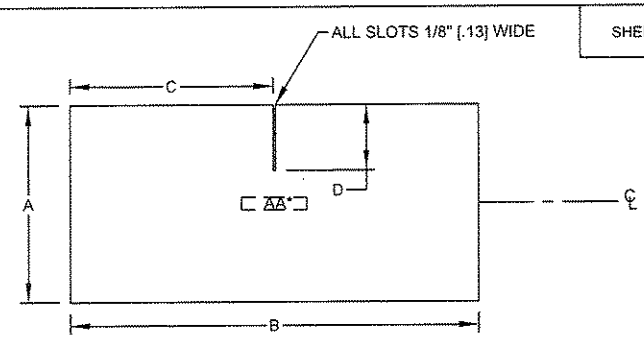

STOCKCODE #	DIVIDER DIMENSIONS			
	A	B	C	D
~~92700-003~~	11 13/16 [11.81]	12 3/8 [12.38]	6 3/16 [6.19]	6 [6]

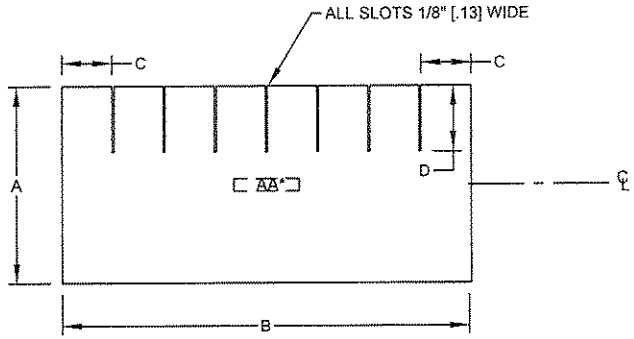

STOCKCODE #	DIVIDER DIMENSIONS			
	A	B	C	D
92700-002	7 3/4[7.75]	20 3/4[20.75]	2 9/16 [2.56]	4 1/2 [4.5]

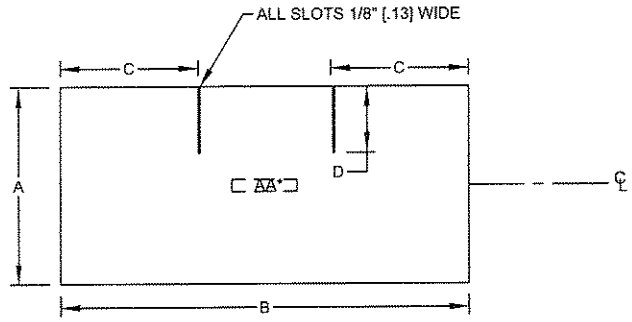

STOCKCODE #	DIVIDER DIMENSIONS			
	A	B	C	D
92700-006	11 13/16 [11.81]	18 7/8 [18.88]	6 5/16 [6.31]	6 [6]

ASSEMBLED VIEW ALL DIMENSIONS I.D.

STYLE: IF

MATERIAL: EQUAL TO OR BETTER THAN
TYPE: 200# S/W CORRUGATED BD. C-FLUTE

NOTES:

1. THE STOCKCODE # TO BE PRINTED OR EMBOSSED AND HIDDEN WHEN FULLY ASSEMBLED. DIMENSIONS ARE HELD TO THE CENTERLINE OF THE SHAPES. (REF. AA*)

WARNING: ALL INFORMATION CONTAINED WITHIN THIS PRINT IS CONFIDENTIAL AND IS THE PROPERTY OF INDIANA DEPT. OF CORRECTION. BY ACCEPTING THIS PRINT THE USER AGREES THAT IT SHALL NOT BE USED FOR ANY OTHER PURPOSE THAN THAT FOR WHICH IT WAS INTENDED.

REV	ERN	STATUS	DATE
NR	010087	NEW RELEASE	11/06/01

NOTES:

PEN PRODUCTS
Prison Enterprises Network

TOLERANCES: GENERATED BY: K.R.CARTER | PLOT SCALE: 1/8 | ORIGIN DATE: 08/28/01

FRACTION: ±1/4 | DECIMAL: ±.25 | ANGLE: | DATE: 11/06/01 | EFFC: 010087

OTHER DATA:

DESCRIPTION: CORRUGATED PARTITION

DRAWING NUMBER: 92700-000 | REV: NR

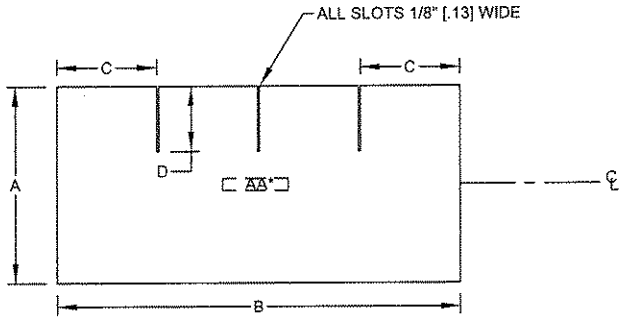

STOCKCODE #	DIVIDER DIMENSIONS			
	A	B	C	D
92700-007	8 1/4 [8.25]	11 3/4	3 [3]	4 1/2 [4.5]

WARNING; ALL INFORMATION CONTAINED WITHIN THIS PRINT IS CONFIDENTIAL AND IS THE PROPERTY OF INDIANA DEPT. OF CORRECTION. BY ACCEPTING THIS PRINT THE USER AGREES THAT IT SHALL NOT BE USED FOR ANY OTHER PURPOSE THAN THAT FOR WHICH IT WAS INTENDED.

REV	ERN	STATUS	DATE
NR	010087	NEW RELEASE	11/06/01

NOTES:

PRODUCTS
Prison Enterprises Network

TOLERANCES: FRACTION ±1/4 DECIMAL ±.25 ANGLE

GENERATED BY: K.R.CARTER
PLOT SCALE: 1/8
LAYOUT DATE: 08/28/01
RELEASE DATE: 11/06/01
ERN: 010087

OTHER DATA:

DESCRIPTION: CORRUGATED PARTITION

DRAWING NUMBER: 92700-000
REV: NR

ENGINEERING SPECIFICATION
STATE OF INDIANA
DEPARTMENT OF CORRECTION
PEN PRODUCTS

I. OBJECTIVE:
To provide a corrugated partition for use in the shipping of soap products in quart size bottles.

II. REQUIREMENTS:

A.	Material	Equal to or better than 200 lb. Single wall C- Flute Corrugated Board.
B.	Style	Interior Forms (IF), International Box Code 0933
C.	Slot Placement	Slot placement and number (3) to be in such a way as to provide equal and adequate spacing for the end product. Suggested spacing center line to center line. Middle Cells =3 3/ 4 Border Cells = 3 5/ 8
D.	Slot Width	Slot width to be of equal width to provide support and proper resistance to movement in all directions between and with other partitions.
E.	Slot Depth	Depth to be no more then 52 % of the height of the partition and no less then 50 % of the height.
F.	Text	The stock code numbers to be printed or embossed.
G.	Compatibility	Must be compatible with Box number 92500-112
H.	Size (Overall dimensions)	Length 14 3/ 4 + / - 1/ 8 Height 10 1/ 2 + / - 1/ 8

ORIGIN DATE	DESCRIPTION	DOCUMENT NO.
March 4, 2003	CORRUGATED PARTITION 14 3/ 4 X 10 1/ 2	92700-016
GENERATED BY		RELEASE DATE
J HUGHES		04/02/03
ERN NO		REVISION NO.
030012		NR

ENGINEERING SPECIFICATION
STATE OF INDIANA
DEPARTMENT OF CORRECTION
PEN PRODUCTS

III PROCUREMENT:

A. Packaging/Shipping
Per purchase order

B. Reference — 1992 Fiber Box Handbook
Fiber Box Association

C. Method of Specifying — 92700-016

ORIGIN DATE	DESCRIPTION	DOCUMENT NO.
March 4, 2003	CORRUGATED PARTITION 14 3/ 4 X 10 1/ 2	92700-016
GENERATED BY		RELEASE DATE
J HUGHES		04/02/03
ERN NO		REVISION NO.
030012		NR

ENGINEERING SPECIFICATION
STATE OF INDIANA
DEPARTMENT OF CORRECTION
PEN PRODUCTS

I. OBJECTIVE:
To provide a corrugated partition for use in the shipping of soap products in quart size bottles.

II. REQUIREMENTS:

A. Material	Equal to or better than 200 lb. Single wall C- Flute Corrugated Board.
B. Style	Interior Forms (IF), International Box Code 0933
C. Slot Placement	Slot placement and number (2) to be in such a way as to provide equal and adequate spacing for the product. Suggested Spacing Center line to center line Middle Cells = 3 3/ 4 Border Cells = 3 5/8
D. Slot Width	Slot width to be of equal width to provide support and proper resistance to movement in all directions between and with other partitions.
E. Slot Depth	Depth to be no more then 52 % of the height of The partition and no less then 50 % of the height.
F. Text	The stock code numbers to be printed or embossed.
G. Compatibility	Must be compatible with Box number 92500-112
H. Size (Overall dimensions)	Length 11 + / - 1/ 8 Height 10 1/ 2 + / - 1/ 8

ORIGIN DATE	DESCRIPTION	DOCUMENT NO.
March 4, 2003	CORRUGATED PARTITION 11 X 10 1/ 2	92700-017
GENERATED BY		RELEASE DATE
J HUGHES		04/02/03
ERN NO		REVISION NO.
030012		NR

ENGINEERING SPECIFICATION
STATE OF INDIANA
DEPARTMENT OF CORRECTION
PEN PRODUCTS

III PROCUREMENT:

A. Packaging/Shipping
Per purchase order

B. Reference — 1992 Fiber Box Handbook
Fiber Box Association

C. Method of Specifying — 92700-017

ORIGIN DATE	DESCRIPTION	DOCUMENT NO.
March 4, 2003	CORRUGATED PARTITION 11 X 10 1/ 2	92700-017
GENERATED BY		RELEASE DATE
J HUGHES		04/02/03
ERN NO		REVISION NO.
030012		NR

ENGINEERING SPECIFICATION
STATE OF INDIANA
DEPARTMENT OF CORRECTION
PEN PRODUCTS

I. OBJECTIVE:
To provide a corrugated partition for use in the shipping of cleaning products.

II. REQUIREMENTS:

A. Material	Equal to or better than 200 lb. Single wall C- Flute Corrugated Board.
B. Style	Interior Forms (IF), International Box Code 0933
C. Slot Placement	Slot placement and number (1) to be in such a way as to provide equal and adequate spacing for the end product. Suggested spacing edge, to center line. Border Cells = 5-7/16
D. Slot Width	Slot width to be of equal width to provide support and proper resistance to movement in all directions between and with other partitions.
E. Slot Depth	Depth to be no more then 52 % of the height of the partition and no less then 50 % of the height.
F. Text	The stock code numbers to be printed or embossed.
G. Compatibility	Must be compatible with Box number 92500-113
H. Size (Overall dimensions)	Length 10-7/8 + / - 1/ 8 Height 4-7/8 + / - 1/ 8

ORIGIN DATE	DESCRIPTION	DOCUMENT NO.
June 21, 2004	CORRUGATED PARTITION 10-7/8 X 4-7/8 WITH 1 SLOT	92700-018
GENERATED BY		RELEASE DATE
J HUGHES		
ERN NO		REVISION NO.
		8

ENGINEERING SPECIFICATION
STATE OF INDIANA
DEPARTMENT OF CORRECTION
PEN PRODUCTS

III PROCUREMENT:

A. Packaging/Shipping
Per purchase order

B. Reference — 1992 Fiber Box Handbook
Fiber Box Association

C. Method of Specifying — 92700-018

ORIGIN DATE	DESCRIPTION	DOCUMENT NO.
June 21, 2004	CORRUGATED PARTITION 10-7/8 X 4-7/8 WITH 1 SLOT	92700-018
GENERATED BY J HUGHES		RELEASE DATE
ERN NO		REVISION NO. 8

ENGINEERING SPECIFICATION
STATE OF INDIANA
DEPARTMENT OF CORRECTION
PEN PRODUCTS

I. OBJECTIVE:
To provide a corrugated partition for use in the shipping of cleaning products.

II. REQUIREMENTS:

A. Material	Equal to or better than 200 lb. Single wall C- Flute Corrugated Board.
B. Style	Interior Forms (IF), International Box Code 0933
C. Slot Placement	Slot placement and number (2) to be in such a way as to provide equal and adequate spacing for the end product. Suggested spacing center line to center line. Middle Cells = 3-5/8 Border Cells = 3-5/8
D. Slot Width	Slot width to be of equal width to provide support and proper resistance to movement in all directions between and with other partitions.
E. Slot Depth	Depth to be no more then 52 % of the height of the partition and no less then 50 % of the height.
F. Text	The stock code numbers to be printed or embossed.
G. Compatibility	Must be compatible with Box number 92500-113
H. Size (Overall dimensions)	Length 10-7/8 + / - 1/ 8 Height 4-7/8 + / - 1/ 8

ORIGIN DATE	DESCRIPTION	DOCUMENT NO.
June 18, 2004	**CORRUGATED PARTITION 10-7/8X 4-7/8 WITH 2 SLOTS**	**92700-019**
GENERATED BY		**RELEASE DATE**
J HUGHES		
ERN NO		**REVISION NO.**
		8

ENGINEERING SPECIFICATION
STATE OF INDIANA
DEPARTMENT OF CORRECTION
PEN PRODUCTS

III PROCUREMENT:

A. Packaging/Shipping
Per purchase order

B. Reference — 1992 Fiber Box Handbook
Fiber Box Association

C. Method of Specifying — 92700-019

ORIGIN DATE	DESCRIPTION	DOCUMENT NO.
June 18, 2004	CORRUGATED PARTITION 10-7/8X 4-7/8 WITH 2 SLOTS	92700-019
GENERATED BY		RELEASE DATE
J HUGHES		
ERN NO		REVISION NO.
		8

ENGINEERING SPECIFICATION
STATE OF INDIANA
DEPARTMENT OF CORRECTION
PEN PRODUCTS

I. OBJECTIVE:
To provide a corrugated partition for use in the shipping of soap products in quart size bottles.

II. REQUIREMENTS:

A.	Material	Equal to or better than 200 lb. Single wall C- Flute Corrugated Board.
B.	Style	Interior Forms (IF), International Box Code 0933
C.	Slot Placement	Slot placement and number (2) to be in such a way as to provide equal and adequate spacing for the product. Suggested Spacing Center line to center line Middle Cells = 3 3/ 4 Border Cells = 3 5/8
D.	Slot Width	Slot width to be of equal width to provide support and proper resistance to movement in all directions between and with other partitions.
E.	Slot Depth	Depth to be no more then 52 % of the height of The partition and no less then 50 % of the height.
F.	Text	The stock code numbers to be printed or embossed.
G.	Compatibility	Must be compatible with Box number 92500-112
H.	Size (Overall dimensions)	Length 10 5/8 + / - 1/ 8 Height 9 5/8 + / - 1/ 8

ORIGIN DATE	DESCRIPTION	DOCUMENT NO.
May 14, 2010	CORRUGATED PARTITION 10 5/8 X 9 5/8	92700-023
GENERATED BY		RELEASE DATE
E. KOLESNIKOV		08/02/07
ERN NO		REVISION NO.
		NR

ENGINEERING SPECIFICATION
STATE OF INDIANA
DEPARTMENT OF CORRECTION
PEN PRODUCTS

III PROCUREMENT:

A. Packaging/Shipping
Per purchase order

B. Reference — 1992 Fiber Box Handbook
Fiber Box Association

C. Method of Specifying — 92700-023

ORIGIN DATE	DESCRIPTION	DOCUMENT NO.
May 14, 2010	CORRUGATED PARTITION 10 5/8 X 9 5/8	92700-023
GENERATED BY		RELEASE DATE
E. KOLESNIKOV		08/02/07
ERN NO		REVISION NO.
		NR

ENGINEERING SPECIFICATION
STATE OF INDIANA
DEPARTMENT OF CORRECTION
PEN PRODUCTS

I. OBJECTIVE:
To provide a corrugated partition for use in the shipping of soap products in quart size bottles.

II. REQUIREMENTS:

A. Material	Equal to or better than 200 lb. Single wall C- Flute Corrugated Board.
B. Style	Interior Forms (IF), International Box Code 0933
C. Slot Placement	Slot placement and number (2) to be in such a way as to provide equal and adequate spacing for the product. Suggested Spacing Center line to center line Middle Cells = 3 3/ 4 Border Cells = 3 5/8
D. Slot Width	Slot width to be of equal width to provide support and proper resistance to movement in all directions between and with other partitions.
E. Slot Depth	Depth to be no more then 52 % of the height of The partition and no less then 50 % of the height.
F. Text	The stock code numbers to be printed or embossed.
G. Compatibility	Must be compatible with Box number 92500-112
H. Size (Overall dimensions)	Length 7 1/8 + / - 1/ 8 Height 9 5/8 + / - 1/ 8

ORIGIN DATE	DESCRIPTION	DOCUMENT NO.
May 14, 2010	CORRUGATED PARTITION 7 1/8 X 9 5/8	92700-024
GENERATED BY		RELEASE DATE
E. KOLESNIKOV		08/02/07
ERN NO		REVISION NO.
		NR

ENGINEERING SPECIFICATION
STATE OF INDIANA
DEPARTMENT OF CORRECTION
PEN PRODUCTS

III PROCUREMENT:

A. Packaging/Shipping
Per purchase order

B. Reference — 1992 Fiber Box Handbook
Fiber Box Association

C. Method of Specifying — 92700-024

ORIGIN DATE	DESCRIPTION	DOCUMENT NO.
May 14, 2010	CORRUGATED PARTITION 7 1/8 X 9 5/8	92700-024
GENERATED BY		RELEASE DATE
E. KOLESNIKOV		08/02/07
ERN NO		REVISION NO.
		NR