INDIANA DEPARTMENT OF
ENVIRONMENTAL MANAGEMENT

2013 Edition

Bulletin PWS 1
December 1987
Revised February 1996
Reprinted June 1997
Revised 2001 & 2009 & 2013

CROSS CONNECTION CONTROL & BACKFLOW PREVENTION MANUAL

This page intentionally blank.

Please consider the environment before printing this manual.

The Indiana Department of Environmental Management

In conjunction with:

Cross Connection Control Committee, City and County of Denver, Colorado;
Department of Natural Resources, State of Wisconsin;
United States Environmental Protection Agency, Water Supply Division; and,
R.W. Muckleroy, Houston, Texas.

Excerpts taken from Cross Connections and Backflow Prevention, by permission.
Copyright 1974, the American Water Works Association.

www.idem.IN.gov

Abstract 4

Introduction 4

- **What is a Cross Connection?** 4
- **Protection of Water Supply Systems** 5

Roles and Responsibilities for Cross Connection Control 5

- **Water Purveyor** 5
- **Indiana Department of Environmental Management (IDEM)** 6
- **Consumer** 7
- **Cross Connection Control Device Inspector/Backflow Tester** 7

State of Indiana Cross Connection Regulations 8

- **Indiana State Department of Health** 8
- **Indiana Department of Environmental Management (IDEM)** 8
- **Indiana Plumbing Code** 19

Guidelines for Developing a Cross Connection Control Program 21

- **Local Ordinances** 21
- **Outreach and Education** 21
- **Inspection** 22
- **Record Keeping** 22
- **Pipe Color Coding** 23
- **Fire Protection Systems** 23
- **Water Loading Stations** 23
- **Water Trucks** 24

Training Providers of Cross Connection Device Inspectors and Testers 24

Unacceptable Backflow Preventer Devices 25

- **Single-Check Valve** 25
- **Changeover Devices** 25

Approved Types of Backflow Prevention Assemblies 26

- **Air-Gap Separation** 26
- **Atmospheric Vacuum Breaker** 28
- **Pressure Vacuum Breaker** 28
- **Double-Check Valve** 28
- **Reduced-Pressure Principle Backflow Preventer** 29
- **Hose Bibb Vacuum Breaker** 30

Proper Selection of Backflow Prevention Devices 31

- **Thermal Expansion** 31

Reported Backflow Incidents Past and Present in Indiana 32

Summary 34

Appendix A: Sample Test Report Form 35

Appendix B: Works Cited 36

Appendix C: Additional and Expanded Definitions 37

Appendix D: Examples of Cross Connections and Recommended Type of Backflow Protection 40

Abstract

This document has been generated by the Indiana Department of Environmental Management (IDEM) to provide general guidelines regarding cross connection control and backflow prevention in the State of Indiana. This manual is intended to serve as an informative and useful introductory reference for backflow prevention, to be used in conjunction with reference texts for more detail. One extremely important text is the **"Manual of Cross Connection Control, Tenth Edition"** by the University of Southern California, 2009, available from the University of Southern California bookstore.

Included in this manual are the Indiana Administrative Codes governing cross connection control and backflow, including codes administered by the Indiana State Department of Health (ISDH) and IDEM, as well as the Indiana Plumbing Code. Guidelines for developing a cross connection control program are also included. A section explaining the legal liability associated with cross connections and backflow is additionally provided for reference. The technical aspects of some common cross connection control devices and backflow prevention devices are also presented. The mention of trade names and commercial products in this manual are for illustrative purposes, and does not constitute endorsement or specific recommendation of use.

Introduction

What is a Cross Connection?

For use in this manual, a **cross connection** is: any physical arrangement whereby a public water supply is connected, directly or indirectly, with any secondary water supply system, sewer drain, conduit, pool, storage reservoir, plumbing fixture, or other device which contains or may contain any water, contaminated liquid, or other waste of unknown or unsafe quality that could impart a contaminant to the drinking water as a result of backflow caused by backpressure or backsiphonage.

Backflow is generally defined as the flow of any foreign liquid, gas or other substance into the distributing pipelines of a potable supply of water from any source or sources other than the intended one. For backflow to occur, two conditions must be present:

1. A link must exist between the potable and the nonpotable system; and,
2. The resultant flow produced by the differential pressure must be toward the potable system. If both systems are at pressures greater than atmospheric (positive pressure), backflow due to back pressure can occur. A pump, elevated tank or boiler can create a back pressure that is greater than the pressure in the potable system.

If the potable system is at a pressure less than atmospheric (negative pressure), the atmospheric pressure on the foreign liquid will force it toward the partial vacuum and backsiphonage occurs. A more explicit term for backflow when subatmospheric pressure exists, backsiphonage is the backing up, or siphoning, of a foreign liquid into a potable water system. Backflow due to back pressure is well illustrated by an accident that occurred during World War II at an East Coast shipyard. The water supply for the firefighting system was drawn from the harbor and supplied at a pressure higher than that used in the potable water system. A temporary cross connection between the two systems, made by someone unfamiliar with the systems, caused the polluted harbor water to be pumped back into the potable water system. This accident resulted in approximately 700 cases of gastroenteritis. A similar incident, reported on the West Coast in 1960, was discovered before anyone became sick.

Protection of Water Supply Systems

In order to protect the public water supply system from cross connections:

- No installation of public water supply piping or part thereof shall be made in such a manner that it will be possible for used, unclean, polluted or contaminated water, mixtures or substances to enter any portion of such piping from any tank, receptacle, equipment or plumbing fixture by reason of backsiphonage or any other cause, either during normal use and operation thereof or when any such tank, receptacle, equipment or plumbing fixture is flooded or subject to pressure in excess of the pressure in the hot-or-cold-water piping;
- No person shall make a connection or allow one to exist between pipes or conduits carrying domestic water supplied by any public or private water service system, and any pipes, conduits or fixtures containing or carrying water from any other source or containing or carrying water which has been used for any purpose whatsoever, or any piping carrying chemicals, liquids, gases, or any substance, unless there is provided an approved backflow prevention device. IDEM's approval must be obtained before any connection is made between the domestic supply and any contaminated, polluted, or auxiliary water system; and,
- No plumbing fixture, device or construction shall be installed or maintained or shall be connected to any domestic water supply when such installation or connection may provide a possibility of polluting such water supply or may provide a cross connection between a distributing system of water for drinking and domestic purposes and water which may become contaminated by such plumbing fixture devices or construction unless there is provided an approved backflow prevention device.

Roles and Responsibilities for Cross Connection Control

Water Purveyor

The water purveyor's responsibility begins at the source of supply and ends at the point of delivery to the consumer's water system. Within those boundaries, the purveyor must provide adequate treatment facilities, public water distribution systems and service piping. In addition, all public water supplies shall be continuously operated and maintained so that water is safe in quality, clean and adequate in quantity, and chemically satisfactory for ordinary domestic consumption. To ensure that the proper precautions are taken, the purveyor shall:

- Exercise reasonable vigilance to insure that the customer has taken the proper steps to protect the public water system;
- When it is determined that a backflow prevention assembly is required, the water purveyor shall require the customer to install an approved backflow preventer device with respect to the degree of hazard. The customer will be responsible for installation at their own expense, testing immediately upon installation, subsequent testing per regulations, proper repair and maintenance of the assembly and keeping adequate records of each test;
- Maintain a list of their customers requiring backflow devices along with type and location of each device; and,
- Obtain from the customer a copy of each backflow device test report and keep the three (3) most recent for review and inspection by IDEM staff.

The duty to install protective devices and inspect was set out by the Indiana Appellate Court in the Lincoln Trust cross connection case of 1929: Pennsylvania Railroad Company vs. Lincoln Trust Company, Admr., 167 NE 721, or 91 Ind. App 28.

In this case, the Fort Wayne city water utility was held liable for the death of a customer. The customer had consumed tap water polluted with river water introduced into the city main through a cross connection with the railroad's main. The railroad main was carrying polluted water from the river as a secondary source. This case charged a water utility with a special duty in cases where cross connections are in existence. The court said:

> "The City having permitted the railroad company to connect its water main with the water main of the City, was duty-bound to exercise reasonable care to see that no polluted and impure water was allowed to enter its mains through the water main of the railroad."

Note that the court established a duty to inspect and the use of reasonable preventive devices. Specifically, it said that the duty of inspection does not end with installation, but continues during use. With regard to devices, the court said the water company should use every reasonable effort to adopt and use all proper means readily known to science for the prevention of accidents.

Indiana Department of Environmental Management (IDEM)

IDEM has the following responsibilities:

- Establish reasonable guidelines and regulations to ensure the public water supplies that people use are safe and provide an adequate drinking water supply. The commissioner uses agency staff to enforce the rules, regulations and policies to be followed in carrying out an effective cross connection control program;
- Assist Indiana's Water Purveyors with developing an effective Cross Connection Control program;
- Review and approve organizations as training providers of cross connection control device inspectors in accordance with 327 IAC 8-10-12;
- Maintain a list of USC and Indiana Plumbing Code approved cross connection control assemblies and devices. The list of approved devices changes frequently. Therefore, we have compiled a list of the various approved certification bodies and their respective websites containing the latest approved lists. This list is available in the "Approved Devices" Section found on page 26;
- Maintain a list of "Active" and "All" Indiana Registered Cross Connection Control Device Inspectors;
- Assist water purveyors in bringing customers into compliance with cross connection regulations. If a utility feels that a facility is a cross connection hazard, and is unable to obtain cooperation regarding the utility's cross connection policies, the utility can contact IDEM's Office of Water Quality, Drinking Water Branch for assistance. If circumstances warrant, the IDEM Drinking Water Branch will contact the persons involved and work toward a resolution. In extreme cases, the IDEM Drinking Water Branch will refer persons for enforcement to ensure compliance with Indiana's regulations. According to Indiana statute, found under IC 13-14-2-2, IDEM employees have the right of entry upon lands or water for the purpose of investigation. When necessary and in accordance with 327 IAC 8-10-10(a), order the water purveyor to remove the customer service meter or otherwise sever the water purveyor connection; and,
- Revoke or suspend the registration of a cross connection control device inspector for improper testing, maintenance, reporting, or other unethical practices in accordance with 327 IAC 8-10 of the Indiana Administrative Code. A hearing is required, as laid out in Indiana Statute under in IC 4-21.5 or IC 13-18-11-8.

Consumer

The consumer has the primary responsibility of preventing pollutants and contaminants from entering their potable water system or the public potable water system. The consumer's responsibility starts at the point of delivery from the public water supply and includes all water conditioning equipment and piping. When it is determined that a backflow prevention device is required for the protection of the public water system, the consumer shall be required to install an approved backflow prevention device at each service connection at their own expense, to properly repair and maintain the device or devices and to keep adequate records of each test and subsequent maintenance and repair.

Cross Connection Control Device Inspector/Backflow Tester

A backflow inspector or tester is a person who has successfully completed training in the testing and inspection of cross connection control devices from a training provider approved by IDEM. The backflow inspector or tester is responsible for the following:

- Testing backflow devices in accordance with procedures in Section 9 of USC's "Manual of Cross Connection Control: Tenth Edition,";
- Ensuring testing equipment is annually tested and calibrated in accordance with procedures outlined in Section 10 of USC's "Manual of Cross Connection Control: Tenth Edition"; and,
- Tagging each tested backflow device and reporting the results of each inspection or test conducted pursuant to 327 IAC 8-10-9(b) and submitting the report to the public water system and customer within 30 days of the inspection or test.

United States Environmental Protection Agency

The Safe Drinking Water Act (SDWA) regulations are intended to protect the quality of source water and to ensure treated drinking water remains safe until it is delivered to consumers. A backflow assembly that does not meet the U.S. EPA lead free rule of .25% introduced into commerce legally on January 3, 2014, can't be used in the installation or repair of a private water systems, residential or non-residential facility providing water for human consumption on January 4, 2014. Exemptions to the prohibition on use and introduction into commerce provisions in 1417(a)(1) and (3) 1417(a)(4)(A) do exist. One exemption is for "pipes, pipe fittings, plumbing fittings, or fixtures, including backflow preventers, that are used exclusively for **nonpotable services**, such as manufacturing, industrial processing, irrigation, outdoor watering, or any other uses where the water is not anticipated to be used for human consumption.

State of Indiana Cross Connection Regulations

The following are sections from the Indiana Administrative Code containing the regulations governing cross connections.

Indiana State Department of Health:

170 IAC 6-1-20 Water quality standards

Authority: IC 8-1-1-3; IC 8-1-2-4
Affected: IC 8-1-2-33

Sec. 20. Quality. (A) Water furnished by any water utility for human consumption or for domestic use shall be of such quality as will have the approval, or comply with the requirements, of the Indiana State Board of Health.
(B) (1) Public water supplies within the distribution pipe systems shall be adequately protected against pollution from back siphonage or cross connections with other systems on customer's property by proper installation of protective devices in accordance with the rules of the Indiana State Board of Health. Such protective devices shall be installed and maintained at the cost and expense of the customer, subject however, to the inspection, test and approval of the utility before being placed in service, and at such times thereafter as recommended by the Indiana State Board of Health.
(2) Public water supplies shall also be adequately protected against any unnecessary and avoidable pollution at their own sources, and at all times after being taken from there, until delivery to the customer, to conform in all cases to the requirements of the Indiana State Board of Health. *(Indiana Utility Regulatory Commission; No. 34805: Standards of Service For Water Utilities Rule 18; filed Nov 28, 1977, 3:00 pm: Rules and Regs. 1978, p. 693; readopted filed Jul 11, 2001, 4:30 p.m.: 24 IR 4233; readopted filed Apr 24, 2007, 8:21 a.m.: 20070509-IR-170070147RFA)*

Indiana Department of Environmental Management (IDEM):

Effective December 13, 2012, the Indiana Department of Environmental Management's Cross Connection Control and Backflow Prevention rules were modified. The new regulations in their entirety can be found below. Major changes/additions from the previous rule are summarized below:

- Added definitions of "atmospheric vacuum breaker backsiphonage prevention assembly", and "spill resistant vacuum breaker";
- Incorporated by reference the December 13, 2010 "List of Approved Backflow Prevention Assemblies" by the Foundation for Cross Connection Control and Hydraulic Research of the University of Southern California, including vertical reduced pressure principal backflow preventers;
- Allowance of a double check valve assembly on a fire sprinkler system without a chemical additive and requiring a reduced pressure (RP) device for one that does have a chemical additive;
- Added spill resistant vacuum breakers as approved backflow prevention devices for irrigation facilities;

- Added installation requirements for atmospheric vacuum breaker backsiphonage prevention assemblies;
- Modified testing interval for reduced pressure principle backflow preventers from every six months to annually and added annual testing interval for atmospheric vacuum breaker backsiphonage prevention assemblies;
- Added requirement for annually testing and calibrating testing equipment for accuracy;
- Added requirement to install an inspection tag upon completion of testing, calibration, or repair of any cross connection control device. The inspection tag must have the name of the inspector, date of inspection, and model, serial and size of the backflow device being tested. The inspection tag must be waterproof and protected against tampering; and,
- Incorporated by reference the "Manual of Cross Connection Control 10th Edition" by the Foundation for Cross Connection Control and Hydraulic Research of the University of Southern California into the training provider course requirements as well as for the backflow prevention assembly field test procedures and gauge accuracy verifications.

Rule 10. Cross Connections; Control; Operation (NOTE: IDEM Only Rules Listed Below)
327 IAC 8-10-1 Definitions
Authority: IC 13-14-8; IC 13-14-9; IC 13-15-1-2; IC 13-15-2-1; IC 13-18-3-1; IC 13-18-4-1
Affected: IC 13-11-2; IC 13-13-5-1; IC 13-18-2

Sec. 1. In addition to the definitions in IC 13-11-2 and 327 IAC 1, the following definitions apply throughout this rule:

(1) "Air gap" means an unobstructed vertical distance through atmosphere between the:
  (A) discharge end of a pipeline supplied from a public water supply; and
  (B) overflow rim of the receiving portion of the customer water system.

(2) "Atmospheric vacuum breaker backsiphonage prevention assembly" means an assembly containing:
  (A) an air inlet valve;
  (B) a check valve seat; and
  (C) an air inlet port.

(3) "Backflow" means the flow of water or contaminants into the public water supply distribution system from a source other than the public water supply.

(4) "Booster pump" means a pump installed on a pipeline to increase water pressure or flow.

(5) "Commissioner" means the commissioner of the Indiana Department of Environmental Management, or the commissioner's authorized representative.

(6) "Cross connection" means any physical arrangement, including cross connection control devices not in working order, whereby a public water supply distribution system is directly connected, either continuously or intermittently, with any secondary source of supply, sewer, drain, conduit, pool, piping, storage reservoir, plumbing fixture, or other device that contains, or may contain, and is capable of imparting to the public water supply, contaminants, contaminated water, sewage, or other waste or liquid of unknown or unsafe quality.

(7) "Cross connection control device" means any device or assembly, approved by the commissioner for construction on or installation in water supply piping, that is capable of preventing contaminants from entering the public water supply distribution system.

(8) "Cross connection control device inspector" means a person who has:
  (A) successfully completed training in testing and inspection of cross connection control devices from a training provider approved by the commissioner;
  (B) received a registration number from the commissioner; and

(C) not been notified by the commissioner that the registration number has been revoked in accordance with section 11(b) of this rule.

(9) "Cross connection hazard" means any customer facility that, because of the nature and extent of activities on the premises or the materials used in connection with the activities or stored on the premises, would present an immediate or potential danger or health hazard to customers of the public water supply should backflow occur.

(10) "Customer" means any person who receives water from a public water supply.

(11) "Customer service line" means the pipeline from the public water supply to the:

(A) first tap, fixture, receptacle, or other point of customer water use; or

(B) secondary source of supply or pipeline branch in a building.

(12) "Customer water system" means all piping, fixtures, and appurtenances, including secondary sources of supply, used by a customer to convey water on his or her premises.

(13) "Double check valve assembly" means a device or assembly composed of two (2) tightly closing shutoff valves surrounding two (2) independently acting check valves, with four (4) test cocks, one (1) upstream of the four (4) valves and one (1) between each of the four (4) check and shutoff valves.

(14) "Downstream" means the direction of flow when only the public water supply is supplying water through the customer water system and backflow is not occurring.

(15) "Pressure vacuum breaker" means a device or assembly containing an independently operating internally loaded check valve and an independently operating loaded air inlet valve located on the downstream side of the check valve for relieving a vacuum or partial vacuum in a pipeline.

(16) "Public water system" means a public water supply for the provision to the public of water for human consumption through pipes or other constructed conveyances, if the system has at least fifteen (15) service connections or regularly serves at least twenty-five (25) individuals daily at least sixty (60) days out of the year. The term includes any collection, treatment, storage, and distribution facilities under control of the operator of the system, and used primarily in connection with such the system and any collection or pretreatment storage facilities not under the control that are used primarily in connection with the system.

(17) "Reduced pressure principle backflow preventer" means a device composed of two (2) tightly closing shutoff valves surrounding two (2) independently acting pressure reducing check valves that, in turn, surround an automatic pressure differential relief valve, and four (4) test cocks, one (1) upstream of the five (5) valves and one (1) between each of the four (4) check and shutoff valves. The check valves effectively divide the structure into three (3) chambers. Pressure is reduced in each downstream chamber allowing the pressure differential relief valve to vent the center chamber to atmosphere should either or both check valves malfunction.

(18) "Registration number" means a unique number assigned to a person by the commissioner demonstrating that the person:

(A) has fulfilled the education and examination requirements as described in section 11 of this rule; and

(B) is recognized by the state as a cross connection control device inspector.

(19) "Secondary source of supply" means any well, spring, cistern, lake, stream, or other water source, intake structure, pumps, piping, treatment units, tanks, and appurtenances used, either continuously or intermittently, to supply water other than from the public water supply to the customer, including tanks used to store water to be used only for firefighting, even though the water contained therein is supplied from the public water supply.

(20) "Spill resistant vacuum breaker" means an assembly containing an independently operating, internally loaded check valve, and an independently operating, loaded air inlet valve, located on the discharge side of the check valve. The assembly is to be equipped with a properly located, resilient seated test cock, a properly located bleed or vent valve, and tightly closing, resilient seated shutoff valves, attached at each end of the assembly.

(21) "Supplier of water" means any person who owns or operates a public water supply.

(22) "Training provider" means an organization that conducts or presents a cross connection control device inspector course approved by the commissioner in conformance with section 12 of this rule.

(23) "Upstream" means the direction of flow opposite to downstream.

(Water Pollution Control Division; 327 IAC 8-10-1; filed Sep 24, 1987, 3:00 p.m.: 11 IR 714; filed Mar 31, 1999, 1:50 p.m.: 22 IR 2515; errata filed Aug 30, 1999, 12:06 p.m.: 23 IR 25; filed Mar 6, 2000, 7:56 a.m.: 23 IR 1629; readopted filed Jan 10, 2001, 3:23 p.m.: 24 IR 1518; readopted filed Nov 21, 2007, 1:16 p.m.: 20071219-IR-327070553BFA; filed Nov 13, 2012, 11:39 a.m.: 20121212-IR-327100414FRA)

327 IAC 8-10-2 Cross connection prohibited; bypass
Authority: IC 13-7-7-5; IC 13-7-14-5
Affected: IC 13-7-7-5; IC 13-7-14-5

Sec. 2. No customer shall cause or allow the construction or maintenance of a cross connection. Piping installed to bypass a cross connection control device constitutes a cross connection unless the bypass piping is also fitted with a similar cross connection control device. *(Water Pollution Control Division; 327 IAC 8-10-2; filed Sep 24, 1987, 3:00 pm: 11 IR 715; readopted filed Jan 10, 2001, 3:23 p.m.: 24 IR 1518; readopted filed Nov 21, 2007, 1:16 p.m.: 20071219-IR-327070553BFA)*

327 IAC 8-10-3 Booster pump connection
Authority: IC 13-14-8; IC 13-14-9; IC 13-15-1-2; IC 13-15-2-1; IC 13-18-3-1; IC 13-18-4-1
Affected: IC 13-11-2; IC 13-13-5-1; IC 13-18-2

Sec. 3. No customer shall cause or allow the installation or maintenance of a booster pump in a public water system unless a device is installed to control operation of the booster pump when pressure to pump suction drops as follows:

(1) Wherever a fire suppression system has a booster pump installed only for fire suppression, it shall have an audible or visual alarm to provide warning when flow occurs and a control valve shall be installed on the booster pump discharge to automatically throttle the flow as necessary to maintain a minimum of ten (10) pounds per square inch, gauge, pump suction pressure.

(2) For all booster pumps other than those described in subdivision (1), a control device shall be installed to either prevent operation of the booster pump, or else to automatically throttle flow to or from the booster pump as necessary to maintain a minimum of twenty (20) pounds per square inch, gauge, pump suction pressure. The supplier of water may require that the control device be calibrated to maintain a higher than twenty (20) pounds per square inch, gauge, pump suction pressure, where necessary to provide a minimum pressure of twenty (20) pounds per square inch, gauge, throughout the pressure zone of the public water system distribution system to which the customer is connected.

(Water Pollution Control Division; 327 IAC 8-10-3; filed Sep 24, 1987, 3:00 p.m.: 11 IR 715; filed Mar 31, 1999, 1:50 p.m.: 22 IR 2516; readopted filed Jan 10, 2001, 3:23 p.m.: 24 IR 1518; readopted filed Nov 21, 2007, 1:16 p.m.: 20071219-IR-327070553BFA)

327 IAC 8-10-4 Cross connection hazards; notice; exemptions
Authority: IC 13-14-8; IC 13-14-9; IC 13-15-1-2; IC 13-15-2-1; IC 13-18-3-1; IC 13-18-4-1
Affected: IC 13-11-2; IC 13-13-5-1; IC 13-18-2

Sec. 4. (a) Wherever a cross connection hazard as specified by subsection (c) is designated:

(1) an air gap shall be constructed or a reduced pressure principle backflow preventer shall be installed, in accordance with section 7 of this rule, on the customer service line for:
    (A) any new facility;
    (B) any modified customer service line; or
    (C) any existing facility where a higher capacity meter is installed; and

(2) neither an air gap nor a reduced pressure principle backflow preventer shall be required to be incorporated into customer service lines that both are utilized solely for fire suppression and are fitted with an audible alarm that will activate when water is detected to be flowing in the customer service line.

(b) Customers who have a cross connection that has resulted in a contaminant being introduced into a public water system or a customer water system:

(1) shall immediately construct an air gap or install a reduced pressure principle backflow preventer on the customer service line in accordance with section 7 of this rule; or

(2) is exempt from the requirements of subdivision (1) because the affected customer service line is both utilized solely for fire suppression and is fitted with an audible alarm that will activate when water is detected to be flowing in the line.

(c) The following customer facilities are designated cross connection hazards:

(1) Aircraft and missile manufacturing plants.
(2) Automotive plants, including those plants that manufacture motorcycles, automobiles, trucks, recreational vehicles, and construction and agricultural equipment.
(3) Beverage bottling plants, including dairies and breweries.
(4) Canneries, packing houses, and reduction plants.
(5) Car washes.
(6) Chemical, biological, and radiological laboratories, including those in high schools, trade schools, colleges, universities, and research institutions.
(7) Hospitals, clinics, medical buildings, autopsy facilities, morgues, other medical facilities, and mortuaries.
(8) Metal and plastic manufacturing, fabricating, cleaning, plating, and processing facilities.
(9) Plants manufacturing paper and paper products.
(10) Plants manufacturing, refining, compounding, or processing fertilizer, film, herbicides, natural or synthetic rubber, pesticides, petroleum or petroleum products, pharmaceuticals, radiological materials, or any chemical that could be a contaminant to the public water supply.
(11) Commercial facilities that use herbicides, pesticides, fertilizers, or any chemical that could be a contaminant to the public water supply.
(12) Plants processing, blending, or refining animal, vegetable, or mineral oils.
(13) Commercial laundries and dye works, excluding coin-operated laundromats.
(14) Sewage, storm water, and industrial waste treatment plants and pumping stations.
(15) Waterfront facilities, including piers, docks, marinas, and shipyards.
(16) Industrial facilities that recycle water.
(17) Restricted or classified facilities (federal government defense or military installations), or other facilities closed to the supplier of water or to the commissioner.

(d) Customer facilities not designated as a cross connection hazard by subsection (c) may be designated a cross connection hazard by written notification from the commissioner to the customer and to the customer's public water system. The notice shall specify the nature of the customer activity that necessitates designation of the customer's facility as a cross connection hazard, and the date by which the customer shall install a cross connection control device in accordance with section 7 of this rule, on the customer service line to the facility so designated.

(e) The commissioner may issue a letter exempting a customer from the requirements of subsection (a) if the customer can show to the satisfaction of the commissioner that the activities taking place at the customer's facility, and the materials used in connection with these activities or stored on the premises, cannot endanger the health of customers of the public water system should backflow occur. An exemption shall remain valid for no more than three (3) years from the date of issuance. If the commissioner finds that the customer facility has become a cross connection hazard, the commissioner will void the exemption and so notify the customer. *(Water Pollution Control Division; 327 IAC 8-10-4; filed Sep 24, 1987, 3:00 p.m.: 11 IR 716; filed Mar 31, 1999, 1:50 p.m.: 22 IR 2516; readopted filed Jan 10, 2001, 3:23 p.m.: 24 IR 1518; readopted filed Nov 21, 2007, 1:16 p.m.: 20071219-IR-327070553BFA)*

327 IAC 8-10-5 Secondary sources of supply; installation of air gaps or other devices
Authority: IC 13-14-8; IC 13-14-9; IC 13-15-1-2; IC 13-15-2-1; IC 13-18-3-1; IC 13-18-4-1
Affected: IC 13-11-2; IC 13-13-5-1; IC 13-18-2

Sec. 5. (a) Customers shall construct an air gap or install a reduced pressure principle backflow preventer or a double check valve assembly in accordance with section 7 of this rule on the customer service line to:

(1) tanks used only to store water from the public water supply for fire suppression that are constructed to maintain the bacteriological quality of the water, in compliance with 327 IAC 8-2; or
(2) secondary sources of supply that:
    (A) use well water as the only private source of supply;
    (B) are constructed to maintain the bacteriological quality of the water, in compliance with 327 IAC 8-2; and
    (C) produce, without treatment, water meeting the drinking water quality standards enumerated in 327 IAC 8-2.

(b) Customers shall construct an air gap, or install a double check valve assembly or reduced pressure principle backflow preventer in accordance with section 7 of this rule for a fire sprinkler system, to prevent stagnant water from backflowing into the drinking water supply. For a fire sprinkler system with a chemical additive, customers shall install a reduced pressure principle backflow preventer to prevent the chemical additive backflowing into the drinking water supply.
(c) No secondary source of supply of a type other than those enumerated in subsections (a) and (b) shall be physically connected on the customer service line to or into the facility. *(Water Pollution Control Division; 327 IAC 8-10-5; filed Sep 24, 1987, 3:00 p.m.: 11 IR 716; filed Mar 31, 1999, 1:50 p.m.: 22 IR 2517; readopted filed Jan 10, 2001, 3:23 p.m.: 24 IR 1518; readopted filed Nov 21, 2007, 1:16 p.m.: 20071219-IR-327070553BFA; filed Nov 13, 2012, 11:39 a.m.: 20121212-IR-327100414FRA)*

327 IAC 8-10-6 Land irrigation facility buried below ground; installation of air gaps or other devices
Authority: IC 13-14-8; IC 13-14-9; IC 13-15-1-2; IC 13-15-2-1; IC 13-18-3-1; IC 13-18-4-1
Affected: IC 13-11-2; IC 13-13-5-1; IC 13-18-2

Sec. 6. Customers shall construct an air gap, or install a reduced pressure principle backflow preventer or pressure type vacuum breaker in accordance with section 7 of this rule, on the water line connecting the public water supply to any land irrigation facility buried below ground that has a sprinkler outlet located less than six (6) inches above grade and is constructed after July 19, 1985. *(Water Pollution Control Division; 327 IAC 8-10-6; filed Sep 24, 1987, 3:00 p.m.: 11 IR 717; filed Mar 31, 1999, 1:50 p.m.: 22 IR 2518; readopted filed Jan 10, 2001, 3:23 p.m.: 24 IR 1518; readopted filed Nov 21, 2007, 1:16 p.m.: 20071219-IR-327070553BFA)*

327 IAC 8-10-7 Construction and installation requirements for air gaps or other devices
Authority: IC 13-14-8; IC 13-14-9; IC 13-15-1-2; IC 13-15-2-1; IC 13-18-3-1; IC 13-18-4-1
Affected: IC 13-11-2; IC 13-13-5-1; IC 13-18-2; IC 22-13-2

Sec. 7. (a) The discharge pipe of an air gap shall terminate a minimum of:

(1) two (2) pipe diameters of the discharge pipe or six (6) inches, whichever is less, above the maximum recorded flood level or above the flood level rim of the receiving vessel, whichever is higher; or

(2) three (3) pipe diameters of the discharge pipe or six (6) inches, whichever is less, above the maximum recorded flood level or above the flood level rim of the receiving vessel, whichever is higher, where:

(A) a side wall, rib, or similar obstruction is spaced closer than three (3) diameters from the piping affecting the air gap; or

(B) two (2) intersecting walls are located closer than four (4) pipe diameters from the piping affecting the air gap.

(b) Only those models of double check valve assemblies, reduced pressure principle backflow preventers, and pressure vacuum breakers that have been listed by the "List of Approved Backflow Prevention Assemblies", by the Foundation for Cross Connection Control and Hydraulic Research of the University of Southern California, February 7, 2012, or those acceptable under the Indiana plumbing code under the Fire Prevention and Building Safety Commission rules at 675 IAC 16-1.2 *[675 IAC 16-1.2 was repealed filed Jun 30, 1999, 2:53 p.m.: 22 IR 3414]* and 675 IAC 16-1.3, shall be installed.

(c) Reduced pressure principle backflow preventers shall be installed horizontally or vertically as listed by the Foundation for Cross Connection Control and Hydraulic Research of the University of Southern California, February 7, 2012, with:

(1) no plug or additional piping affixed to the pressure differential relief valve port; and

(2) the pressure differential relief valve port a minimum of twelve (12) inches above floor level.

Additionally, the device must be installed at a location where any leakage from the pressure differential relief valve port will be noticed, and that allows access to the valve for maintenance and testing from floor level, without use of a ladder or other similar temporary apparatus. The device must not be installed below ground grade level and must not be subject to flooding, excessive heat, or freezing.

(d) All double check valve assemblies shall be installed at a location that allows access to the device for maintenance and testing from floor level, without use of a ladder or other similar temporary apparatus, and that will not subject the device to flooding, excessive heat, or freezing.

(e) Pressure vacuum breakers and spill resistant vacuum breakers shall be installed as near as possible to the irrigation facility, at a location that allows access to the device for maintenance and testing from floor or ground level, without use of a ladder or other similar temporary apparatus, and that will not subject the device to flooding, excessive heat, or freezing. Additionally, the device must be installed between two (2) tightly closing shutoff valves, with its center line or datum point a minimum of twelve (12) inches above:

(1) floor level;

(2) the highest downstream piping or shutoff valve; and

(3) the highest downstream overflow rim or discharge point.

(f) Atmospheric vacuum breaker backsiphonage prevention assemblies must be installed at a location that allows access to the device for maintenance and testing from floor or ground level, without use of a ladder or other similar apparatus, and that will not subject the device to flooding, excessive heat, or freezing. Additionally, the device must be installed as follows:

(1) A minimum of six (6) inches clearance above the overflow rim or downstream piping.
(2) Absolutely no means of shutoff on the discharge side of vacuum breaker.
(3) Must not be under continuous pressure for more than twelve (12) hours in any twenty-four (24) hour period.

(Water Pollution Control Division; 327 IAC 8-10-7; filed Sep 24, 1987, 3:00 p.m.: 11 IR 717; filed Mar 31, 1999, 1:50 p.m.: 22 IR 2518; readopted filed Jan 10, 2001, 3:23 p.m.: 24 IR 1518; readopted filed Nov 21, 2007, 1:16 p.m.: 20071219-IR-327070553BFA; filed Nov 13, 2012, 11:39 a.m.: 20121212-IR-327100414FRA)

327 IAC 8-10-8 Inspection of devices; time limits
Authority: IC 13-14-8; IC 13-14-9; IC 13-15-1-2; IC 13-15-2-1; IC 13-18-3-1; IC 13-18-4-1
Affected: IC 13-11-2; IC 13-13-5-1; IC 13-18-2

Sec. 8. (a) The customer shall install and maintain in working order at all times any cross connection control device or booster pump control device required by this rule.
(b) To ensure that each cross connection control device required by this rule is in working order, the customer shall have each device inspected or tested by a cross connection control device inspector at the time of construction or installation, and at the following intervals, in the following manner:

(1) Air gaps shall be inspected at intervals not exceeding one (1) year to ensure that they continue to meet the requirements of section 7 of this rule.
(2) Reduced pressure principle backflow preventers shall be tested at intervals not exceeding one (1) year to ensure that:
    (A) both check valves are drip-tight under all pressure differentials; and
    (B) the pressure differential relief valve will maintain pressure in the center chamber at least two (2) pounds per square inch below that of the inlet chamber.
(3) Double check valve assemblies shall be tested at intervals not exceeding one (1) year to ensure that both check valves are drip-tight under all pressure differentials.
(4) Pressure vacuum breakers and spill resistant vacuum breakers shall be tested at intervals not exceeding one (1) year to ensure that the air inlet opens fully when water pressure is at or below atmospheric pressure.
(5) Atmospheric vacuum breaker backsiphonage prevention assemblies must be inspected at intervals not exceeding one (1) year to ensure proper operation of the air inlet valve. Removal of canopy may be necessary to determine free movement of air inlet valve.

(c) The customer shall permit access to the customer's premises by the inspector, the customer's public water system, or the commissioner, at reasonable times, and upon presentation of identification, for inspection of the customer water system or testing of cross connection control devices installed in accordance with this rule.
(d) Those customers granted an exemption in accordance with section 4(e) of this rule shall report to the commissioner and to the supplier of water any proposed change in process, plumbing, or materials used or stored at the exempted facility at least fourteen (14) days prior to making the change. Failure to do so shall void the exemption. *(Water Pollution Control Division; 327 IAC 8-10-8; filed Sep 24, 1987, 3:00 p.m.: 11 IR 717; filed Mar 31, 1999, 1:50 p.m.: 22 IR 2518; errata filed Aug 30, 1999, 12:06 p.m.: 23 IR 25; readopted filed Jan 10, 2001, 3:23 p.m.: 24 IR 1518; readopted filed Nov 21, 2007, 1:16 p.m.: 20071219-IR-327070553BFA; filed Nov 13, 2012, 11:39 a.m.: 20121212-IR-327100414FRA)*

327 IAC 8-10-9 Inspectors; reports of inspection or test
Authority: IC 13-14-8; IC 13-14-9; IC 13-15-1-2; IC 13-15-2-1; IC 13-16-1; IC 13-18-3-1; IC 13-18-4-1
Affected: IC 13-11-2; IC 13-13-5-1; IC 13-18-2

Sec. 9. (a) All cross connection control device inspectors shall do the following:
(1) Be registered with the commissioner in accordance with section 11 of this rule.
(2) Submit reports of all inspections as required by subsection (b).
(3) Annually test and calibrate testing equipment for accuracy.
(4) Install an inspection tag upon completion of testing, calibration, or repair, of any cross connection control device. The inspection tag must have at least the following information:
(A) The name of the inspector.
(B) The date of the inspection.
(C) The registration number, model number, serial number, and size of the cross connection control device.

The inspection tag must be waterproof and protected against tampering.
(b) The inspector shall report to the public water system, the customer and, if requested, the commissioner, on a form provided by the commissioner, the results of inspections or tests conducted under section 8(b) of this rule on the following:
(1) Air gaps.
(2) Reduced pressure principle backflow preventers.
(3) Double check valve assemblies.
(4) Pressure vacuum breakers.

Reports shall be submitted to the public water system and to the customer within thirty (30) days of the inspection or test. *(Water Pollution Control Division; 327 IAC 8-10-9; filed Sep 24, 1987, 3:00 p.m.: 11 IR 718; filed Mar 31, 1999, 1:50 p.m.: 22 IR 2519; errata filed Aug 30, 1999, 12:06 p.m.: 23 IR 25; readopted filed Jan 10, 2001, 3:23 p.m.: 24 IR 1518; readopted filed Nov 21, 2007, 1:16 p.m.: 20071219-IR-327070553BFA; filed Nov 13, 2012, 11:39 a.m.: 20121212-IR-327100414FRA)*

327 IAC 8-10-10 Noncompliance; retention of reports; access
Authority: IC 13-14-8; IC 13-14-9; IC 13-15-1-2; IC 13-15-2-1; IC 13-18-3-1; IC 13-18-4-1
Affected: IC 13-11-2; IC 13-13-5-1; IC 13-18-2

Sec. 10. (a) Because cross connections may cause disease through transmission of contaminants via the public water system, the commissioner shall order the public water system to remove the customer service meter or otherwise sever the public water system connection to any customer which the commissioner finds or has reason to believe is in violation of any provision of this rule.
(b) The supplier of water shall retain the three (3) most recent reports of tests conducted on air gaps, reduced pressure principle backflow preventers, double check valve assemblies, and pressure vacuum breakers installed in accordance with this rule. The supplier of water shall permit access to these files at reasonable times and upon presentation of identification by the commissioner.
(c) If so requested, the public water system shall submit to the commissioner copies of any report required to be retained by subsection (b). *(Water Pollution Control Division; 327 IAC 8-10-10; filed Sep 24, 1987, 3:00 p.m.: 11 IR 718; filed Mar 31, 1999, 1:50 p.m.: 22 IR 2519; readopted filed Jan 10, 2001, 3:23 p.m.: 24 IR 1518; readopted filed Nov 21, 2007, 1:16 p.m.: 20071219-IR-327070553BFA)*

327 IAC 8-10-11 Registration of inspectors; list of registered inspectors; list of approved devices
Authority: IC 13-14-8; IC 13-14-9; IC 13-15-1-2; IC 13-15-2-1; IC 13-18-3-1; IC 13-18-4-1
Affected: IC 4-21.5; IC 13-11-2; IC 13-13-5-1; IC 13-18-2; IC 13-18-11-8

Sec. 11. (a) Upon reviewing and finding the information certified by the training provider acceptable, the commissioner shall issue a registration number to each person whose training provider has certified that the applicant has met the following requirements of education and examination:

(1) The information supplied by the applicant must be reviewed and acceptable to the training provider.
(2) Each applicant must attend forty (40) hours of education and successfully complete a written and oral examination for cross connection device inspectors administered by a training provider.

(b) The commissioner may revoke the registration of any cross connection control inspector, following a hearing under IC 4-21.5, when it is found that the inspector has violated any of the provisions set out in this rule or IC 13-18-11-8.

(c) The commissioner shall maintain a list entitled "Indiana Registered Cross Connection Control Device Inspectors, All Inspectors", which is comprised of cross connection control device inspectors registered in Indiana.

(d) The commissioner shall maintain a list entitled "Indiana Registered Cross Connection Control Device Inspectors, Active Inspectors", which is comprised of cross connection control device inspectors:

(1) that are registered in Indiana in accordance with subsection (a); and
(2) who have requested their inclusion on this list in writing to the commissioner during the previous two (2) years.

(e) The commissioner shall maintain a list entitled "List of Approved Backflow Prevention Assemblies, February 7, 2012, by the Foundation for Cross Connection Control and Hydraulic Research, University of Southern California", which is comprised of a listing of cross connection control devices from the Foundation for Cross Connection Control and Hydraulic Research of the University of Southern California.

(f) The commissioner shall make the following lists as described in this section available to the public upon request:

(1) Indiana Registered Cross Connection Control Device Inspectors, All Inspectors.
(2) Indiana Registered Cross Connection Control Device Inspectors, Active Inspectors.
(3) List of Approved Backflow Prevention Assemblies, February 7, 2012, Foundation for Cross Connection Control and Hydraulic Research, University of Southern California.

(Water Pollution Control Division; 327 IAC 8-10-11; filed Sep 24, 1987, 3:00 p.m.: 11 IR 718; filed Mar 31, 1999, 1:50 p.m.: 22 IR 2519; readopted filed Jan 10, 2001, 3:23 p.m.: 24 IR 1518; readopted filed Nov 21, 2007, 1:16 p.m.: 20071219-IR-327070553BFA; filed Nov 13, 2012, 11:39 a.m.: 20121212-IR-327100414FRA)

327 IAC 8-10-12 Approval of an organization as a training provider of cross connection control device inspectors; record keeping
Authority: IC 13-13-5-1; IC 13-14-8; IC 13-14-9; IC 13-15-1-2; IC 13-15-2-1; IC 13-18
Affected: IC 4-21.5; IC 13-11-2; IC 13-18-11-8

Sec. 12. (a) The commissioner shall approve an organization as a training provider of cross connection control device inspectors if the training provider's proposed course meets the following requirements:

(1) The proposed course instruction and examination have a total duration of at least forty (40) hours.
(2) The proposed course deals with matters directly related to the cross connection control devices that include, but are not limited to, the following:
    (A) Cross connection identification, degree of hazard, prevention, control devices, and

practices.

(B) Backflow prevention assembly field test procedures and gauge accuracy verification, Section 9 from the "Manual of Cross Connection Control", Tenth Edition, published October 2009, by the Foundation for Cross Connection Control and Hydraulic Research, University of Southern California.

(C) Cross connection control device inspection, repair, and maintenance.

(D) Content, intent, and related policy of this rule.

(E) Responsibilities of the customer, public water system, and cross connection control device inspector.

(3) Each instructor of the proposed course must be recognized by Indiana as a cross connection control device inspector and qualified by academic work or practical experience directly related to cross connection control device inspection to teach the assigned subject.

(4) Includes both a written and oral examinations proctored by different instructors and meets the following requirements:

(A) A written examination that tests the student's comprehension of the material discussed in subdivision (2).

(B) An oral examination that tests the student's ability and competency to perform inspections, test procedures specified under subdivision (2)(B), and troubleshooting on cross connection control devices.

(5) The organization submits a written request to the commissioner for approval as a training provider of cross connection control device inspectors. The request shall contain the following:

(A) The:

(i) name, address, and telephone number of the organization;

(ii) name of the course;

(iii) specific topics on which there are to be presentations;

(iv) time devoted to each topic; and

(v) dates and locations where the course will be offered.

(B) All instructors':

(i) names;

(ii) registration numbers;

(iii) educational backgrounds;

(iv) professional experiences; and

(v) current professional affiliations.

(C) Information to demonstrate fulfillment of the requirements of subdivision (2) to the satisfaction of the commissioner.

(D) A written class outline.

(b) The commissioner's approval of an organization as a training provider of cross connection control device inspectors shall be valid for a duration of five (5) years.

(c) All training providers must maintain records on the following:

(1) The dates of all courses.

(2) The names of all individuals attending the course.

(3) The duration of the course.

(4) All instructors' names.

(5) The program content.

These records shall be maintained for five (5) years.

(d) Training providers must submit to the commissioner a record of individuals attending courses within thirty (30) days of the conclusion of the course. These records shall be maintained for a five (5) year period. The records shall contain the following:

(1) The name of the course.

(2) The name, address, and current phone number of the individual attending the course.
(3) The date of the course.
(4) Performance on the written and oral examinations required by subsection (a)(4).

(e) The commissioner may revoke the approval of a training provider, following a hearing under IC 4-21.5, when it is found that the training provider has violated any of the provisions set out in the approval of the training provider's cross connection control device inspectors course, in this rule, or IC 13-18-11-8. *(Water Pollution Control Division; 327 IAC 8-10-12; filed Mar 31, 1999, 1:50 p.m.: 22 IR 2520; errata filed Aug 30, 1999, 12:06 p.m.: 23 IR 25; readopted filed Jan 10, 2001, 3:23 p.m.: 24 IR 1518; readopted filed Nov 21, 2007, 1:16 p.m.: 20071219-IR-327070553BFA; filed Nov 13, 2012, 11:39 a.m.: 20121212-IR-327100414FRA)*

327 IAC 8-10-13 Incorporation by reference
Authority: IC 13-14-8; IC 13-14-9; IC 13-15-1-2; IC 13-15-2-1; IC 13-18-3-1; IC 13-18-4-1
Affected: IC 13-11-2; IC 13-13-5-1; IC 13-18-2

Sec. 13. (a) The following materials, including titles and names and addresses of where they may be located for inspection and copying, are incorporated by reference into this rule:

(1) "List of Approved Backflow Prevention Assemblies, February 7, 2012, by the Foundation for Cross Connection Control and Hydraulic Research, University of Southern California", Foundation for Cross Connection Control and Hydraulic Research, University of Southern California, Kaprielian Hall 200, Los Angeles, California 90089-2531 or from the Indiana Department of Environmental Management, Office of Water Quality, Indiana Government Center North, 100 North Senate Avenue, Room N1255, Indianapolis, Indiana 46204.

(2) Backflow Prevention Assembly Field Test Procedures and Gauge Accuracy Verification, Section 9 from the "Manual of Cross Connection Control", Tenth Edition, 1993, published October 2009, by the Foundation for Cross Connection Control and Hydraulic Research, University of Southern California, Kaprielian Hall 200, Los Angeles, California 90089-2531 or from the Indiana Department of Environmental Management, Office of Water Quality, Indiana Government Center North, 100 North Senate Avenue, Room N1255, Indianapolis, Indiana 46204.

(b) The technical standards presented in subsection (a) are continuously revised on a twenty-four (24) month cycle. The commissioner shall commence rulemaking efforts to update the documents incorporated by reference in this section. *(Water Pollution Control Division; 327 IAC 8-10-13; filed Mar 31, 1999, 1:50 p.m.: 22 IR 2521; readopted filed Jan 10, 2001, 3:23 p.m.: 24 IR 1518; errata filed Feb 6, 2006, 11:15 a.m.: 29 IR 1938; readopted filed Nov 21, 2007, 1:16 p.m.: 20071219-IR-327070553BFA; filed Nov 13, 2012, 11:39 a.m.: 20121212-IR-327100414FRA)*

Indiana Plumbing Code:

Effective December 24, 2012, the Fire Prevention and Building Safety Commission's Indiana Plumbing Code rules were modified. The new regulations, also referred to as the "2012 Indiana Plumbing Code", are available for review and reference at the:

Legal and Code Services Section
Indiana Department of Homeland Security
Indiana Government Center South
302 West Washington Street, Room W246
Indianapolis, Indiana 46204

The provisions of this code shall apply to the construction, alteration, and addition to plumbing equipment and systems regulated by this code for Class 1 structures, except townhouses, within the Class 1 structure and up to five (5) feet (1,524 mm) outside of any portion of the Class 1 structure.

Several differences exist between the Indiana Plumbing Code and IDEM's Cross Connection Control rules with respect to backflow devices. IC 22-13-2-4 covers any duplication, conflict, or overlapping of responsibility between the Indiana Plumbing Code and other state agency rules. The table below highlights the main differences between the Indiana Plumbing Code and IDEM's Cross Connection Rules with respect to backflow prevention devices.

Topic	IDEM	Plumbing Code
Testing Frequency	Installed, repaired, relocated and annually	Installed and relocated
Approved Devices	USC and Plumbing Code	Plumbing Code
Approved Testers	Indiana licensed	Does not stipulate
Testing Procedures	USC 10th Edition	Does not stipulate
Inspection Tags	Yes, whenever tested	Does not stipulate
Inspection Reports	Yes, to customer and Public Water System within 30 days	Does not stipulate

In order to ensure both programs requirements are implemented and followed, IDEM and the Indiana Department of Homeland Security have worked together to develop a procedure when the Indiana Plumbing Code applies and where differences exist. This occurs most often whenever an IDEM required backflow device is installed at the direction of the consumer within the Indiana Plumbing Code's purview. In such a case, the customer must agree in writing to the water purveyor to meet the requirements of the IDEM's rules. For example, a customer meeting the definition of "high hazard" business installs a reduced-pressure (RP) backflow device on their service line as it enters their building. Since it was installed inside the building, the Indiana Plumbing Code must be met and the customer must agree in writing to the water purveyor that they will have the device tested by an Indiana backflow tester at least annually and that the results will be provided to the water purveyor.

Guidelines for Developing a Cross Connection Control Program

Local Ordinances

Utilities may not find it necessary to develop a local ordinance to create and operate a cross connection control program. Existing state regulations and utility policies often provide all the authority a utility needs to initiate and operate a cross connection control program. The purpose of a local ordinance or policy is to compliment or enhance the state statutes and regulations. The local ordinance must be at least as stringent as the applicable state regulations. If the utility decides that a local ordinance is desirable, the process of enacting this local ordinance is an important part of the public education role of the utility. A local ordinance must provide the water supplier with the enforcement authority needed to implement an effective cross connection control program. The local ordinance should also give the water supplier the right of entry for the purposes of inspection and investigation, as well as the authority to take enforcement action, such as the termination of water service. Additional functionality the local ordinance may provide is as follows:

- In addition to the seventeen facilities identified in the 327 IAC 8-10 of the Indiana Administrative Code as cross connection hazards, the utility may designate additional facilities as cross connection hazards;
- A utility may want to designate residential irrigation systems that are permanently attached to the potable water system as hazards. This would require the owners of residential irrigation systems to install backflow prevention devices; and,
- A utility may want to require that all test reports from backflow prevention device inspections be submitted to the utility.

Outreach and Education

The most practical way to run an effective cross connection control program is to provide public education for both technical and lay people who must work with the program. Some important education and outreach steps include:

- Developing and maintaining the cooperation of the county health agencies, the water customers and the local government officials;
- Informing the customers of the potential public health risks that can result from a cross connection. The local water utility may educate the public through bill inserts, special mailings or maintain internet sites to explain cross connection and backflow prevention to its residential and commercial customers;
- Explaining the necessity of a “right of entry” to customers;
- Locating the manufacturers of different backflow prevention devices and local distributors;
- Knowing the certified backflow prevention device inspectors in your area;
- Identifying customers with potential cross connection hazards;
- Understanding how to categorize hazards as high or low-risk; and,
- Developing policies concerning new construction and existing facilities.

Inspection

It is important to conduct site surveys or inspections where cross connections are likely to occur. An inspection for potential cross connection hazards can be conducted by anyone authorized by the utility. IDEM recommends that the inspection be performed by an individual certified in the state of Indiana as a backflow prevention inspector or tester, or someone familiar with plumbing and backflow hazards. Some important items to remember are:

- Inspectors should get to know their customers and the water-using processes within facilities that are inspected;
- Inspections should begin at the point of service and continue downstream the length of the customer's drinking water system;
- When installing new connections, customers with potential cross connection hazards should be identified;
- The degree of hazard and the hydraulic demands must be considered when selecting a backflow preventer assembly; and,
- The installation of backflow devices must be in accordance with IDEM, the Indiana Plumbing Code, the Rule 327 IAC 8-10, and manufacturer's specifications. The assembly must be accessible for maintenance and testing from floor level without use of a ladder or similar temporary apparatus.

Record Keeping

Records are vital information that help assure cross connection control devices are in working order and protect utilities from legal liability. The importance of keeping accurate and complete records cannot be overstated.

- The water purveyor must retain the three most recent test reports for air gaps, atmospheric vacuum breakers, reduced-pressure principle backflow preventers, pressure vacuum breakers, spill-resistant pressure vacuum breakers and double-check valve assemblies.
- Copies of test reports (see Appendix A for sample form) must be retained by the water purveyor, the customer, the backflow inspector or tester and be available if requested by IDEM. The inspector is responsible for distributing the test report to the appropriate entities within 30 days of the inspection or test.
- The backflow tester must install an inspection tag on all backflow devices they test. The tag must be waterproof and "protected against tampering". Some examples of waterproof tags would be ones that are laminated/sealed or made of a material such as tyvek. Some examples of "protected against tampering" would include laminated, sealing mechanism, use of a permanent marker and distinct punch marking. The tag must be installed immediately after completing the test and contain at least the following information:

  (1) Manufacturer's name, size, model and serial number of the backflow device,

  (2) Date of inspection, and,

  (3) The name of the inspector.

Pipe Color Coding

When two or more piping systems are used for water in a building or industrial plant, extreme care should be taken not to interconnect the systems. There may be a potable water system in addition to systems carrying lesser quality water, such as fire protection. To help prevent the possibility of the two systems being interconnected, pipes should be identified adequately by legends and color coding based on the "Recommended Standards for Water Works: 2012 Edition" (ten states standard) or the American Standards Association "Scheme for Identification of Piping Systems" (ASA A13.1-1956).

Color coding should not be used solely to identify the contents of the pipes but should be used to supplement the use of legends. Potable water lines should be painted dark blue or with the bands of dark blue and the words "potable water" stenciled on the pipe at appropriate intervals. Pipes carrying water for fire protection should be painted red and be stenciled. Piping systems carrying other material or water for other purposes should also be clearly identified with appropriate legends and color coding.

Fire Protection Systems

Fire protection systems must comply with the rules of the Fire Prevention and Building Safety Commission. Facilities with fire protection systems are often cross connection hazards. Fire protection systems are sometimes connected to auxiliary, nonpotable water sources. Chemical additives or frost inhibitors are sometimes used in fire protection systems. Fire protection systems are not required to be disinfected and sanitized to the same standards as potable water systems. Due to the infrequency with which fire protection systems are used, water standing in the system becomes "stale" or discolored due to iron or manganese and should not be allowed to enter the potable system.

Water Loading Stations

Potable water loading stations used for overhead filling of tanks through a hatch opening at the top are often used to fill potable vessels and other tanks or contaminated vessels. These stations follow specific standards:

1. The filling spout must not be allowed to intrude into the tank. An air gap of at least two (2) pipe diameters of the filling pipe must be maintained above the flood level rim of the receiving vessel.

2. There shall be no backflow to the public water supply.

3. Hoses shall not be contaminated by contact with the ground.

Water Trucks

Water trucks for swimming pools, garden ponds, cisterns, street cleaning, landscaping, ornamental fountains, etc., can be cross connection hazards if proper precautions are not taken when filling the truck from a potable water source. Many water trucks are equipped with an air gap or a reduced-pressure principle backflow prevention assembly on the water intake. If a backflow prevention device is not an integral part of the water truck, a reduced-pressure principle backflow prevention assembly should be installed on the water supply, downstream of the water meter, if a meter is required.

Training Providers of Cross Connection Device Inspectors and Testers

At the time of printing there are four organizations approved in Indiana to certify backflow prevention device inspectors:

- American Backflow Prevention Association – Howard Millsaps (765) 220-5570
- Indiana School of Backflow and Cross Connection – Dave Rushing (317) 867-3388
- Indiana State Pipe Trades Association – Kent Prosser (260) 490-5696
- Test Gauge and Backflow Supply – James Probst (317) 786-8990

Reciprocity with other states is not automatic. An individual should contact IDEM's Drinking Water Branch with questions about reciprocity. Training providers must meet the requirements of 327 IAC 8-10-12, including recertification of their training program every 5 years.

Unacceptable Backflow Preventer Devices

Single-Check Valve

The prevention of backflow in pipelines is a critical problem that requires the tight closing of valves under all conditions of service when flow ceases in the normal direction. Therefore, when a potable water system must be protected against contamination from backflow, it is essential that the preventive device be fully adequate, well-constructed, properly installed and carefully maintained.

Currently IDEM recognizes only backflow prevention devices that have been approved by the Foundation for Cross Connection Control and Hydraulic Research, University of Southern California or the Indiana Plumbing Code. However, keep in mind for situations where the customer chooses to install the backflow prevention device within the Indiana Plumbing Code's purview, the device must be installed in compliance with the Indiana Plumbing Code.

Changeover Devices

Changeover devices and four-way valves have been approved by some states under certain circumstances. A number have been used to quickly change over from one water supply source to another. These devices provide an alternate, but not simultaneous, supply to equipment from a potable domestic supply or a nonpotable auxiliary source. Changeovers include swing devices, swivel devices, four-way plug valves, sliding multi-port tubes (manually or hydraulically operated) and others.

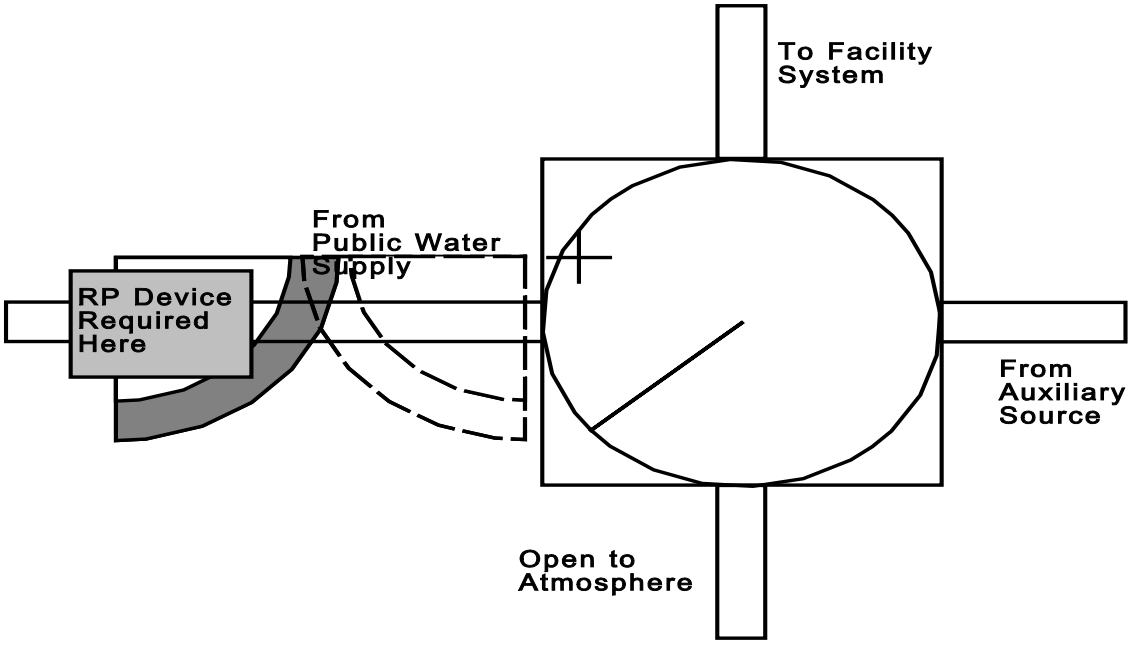

None of these devices should be classified as backflow preventers because they fail to meet the requirements of an approved backflow preventer. For short periods after the swivel has been switched from a nonpotable source to a potable one, the flow of nonpotable water into an approved water system may occur if the system is not protected by a backflow prevention device.

Approved Types of Backflow Prevention Assemblies

In accordance with 327 IAC 8-10-7, only those models of double check valve assemblies, reduced pressure principle backflow preventers, and pressure vacuum breakers that have been listed by the "List of Approved Backflow Prevention Assemblies", by the Foundation for Cross Connection Control and Hydraulic Research of the University of Southern California, February 7, 2012, or those acceptable under the Indiana Plumbing Code under the Fire Prevention and Building Safety Commission rules are approved types of backflow prevention devices. Below is a list of organizations recognized and their respective websites containing their current list of approved devices:

- Foundation for Cross Connection Control and Hydraulic Research of the University of Southern California (USC) http://www.usc.edu/dept/fccchr/list.html ;
- Canadian Standards Association (CSA) – http://directories.csa-international.org/directorymain.asp ; and,
- American Society of Sanitary Engineering (ASSE) – http://www.asse-plumbing.org/prodlist_new.asp .

Most backflow preventers fall into one of three classes: the vacuum breaker, the double-check valve, or the reduced-pressure principle valve. All prevent backflow due to superior pressure, or back pressure on the downstream side of a system, which will overcome the pressure on the supply side. They are installed in the main supply system where there is a possibility of backflow.

Air-Gap Separation

Air-gap separation (AG) is probably the oldest method of preventing cross connections that result in backflow due to either back pressure or backsiphonage. In many states, it is still the only method approved for preventing this type of backflow. Air-gap separation is the unobstructed vertical distance through free atmosphere between the lowest opening from any pipe or faucet supplying water to a tank, plumbing fixture or other device and the flood-level rim of the receptacle.

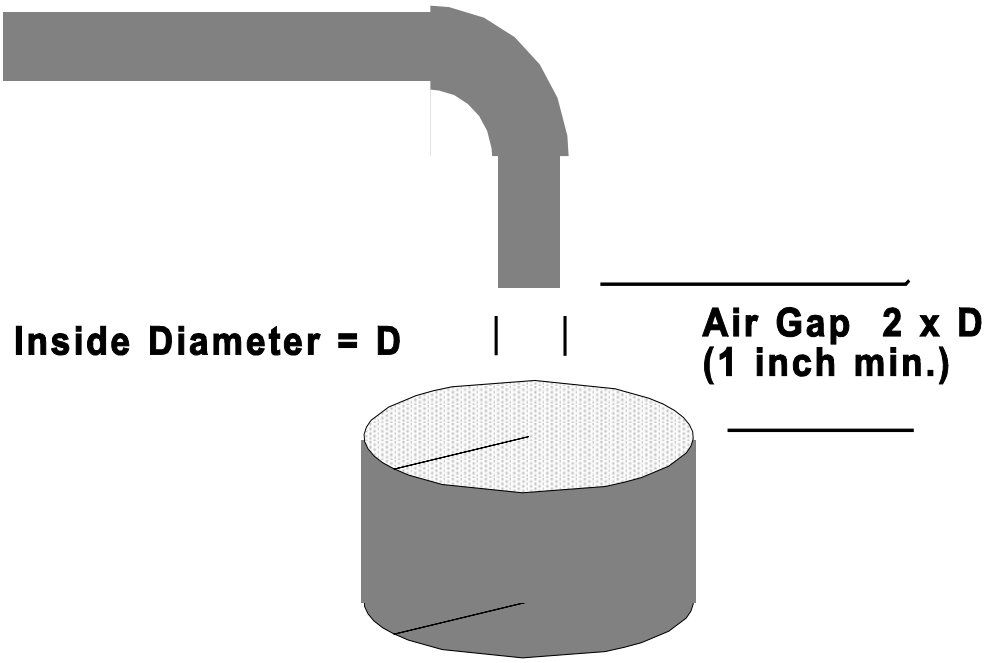

Although an air gap generally affords maximum protection, it can be bypassed easily, its effectiveness thus being entirely destroyed. It is also not reliable if the gap is too small. As defined in USC and Plumbing Code, *an air gap should be twice the diameter of the effective opening of the supply pipe. In no case shall the gap be less than one inch, or 25.4 mm.*

"The Recommended Standards for Water Works: 2012 edition" by the Great Lakes - Upper Mississippi River Board of Public Health and Environmental Managers recommends that for water treatment facility design of chemical addition to drinking water that:
no direct connection exists between any sewer and a drain or overflow from the feeder, solution chamber or tank by providing that at all drains terminate at maximum six inches or two pipe diameters, whichever is lesser, above the overflow rim of a receiving sump, conduit or waste receptacle.

Atmospheric Vacuum Breaker

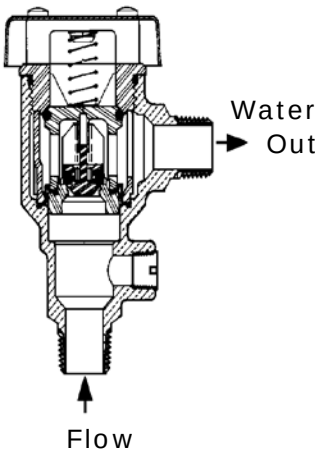

The atmospheric vacuum breaker (AVB) assembly is one of the most simple and least expensive types of backflow preventers. The AVB contains an air inlet valve, check seat and an air inlet port. Water flowing through the AVB causes the air inlet valve to close against the air inlet port. When normal water flow is stopped, the air inlet valve falls to form a block for backsiphonage. The AVB protects against non-health hazards or health hazards under backsiphonage only. The atmospheric vacuum breaker is not designed to protect against back pressure. Based on the design and operation of AVB, the following criteria must be implemented:

1. Absolutely no shut-off valves are allowed on the discharge side of the AVB;
2. A minimum of six inches of clearance above all downstream piping of the AVB or any overflow rim is required; and,
3. The AVB shall not be under continuous pressure for more than 12 hours.

Pressure Vacuum Breaker

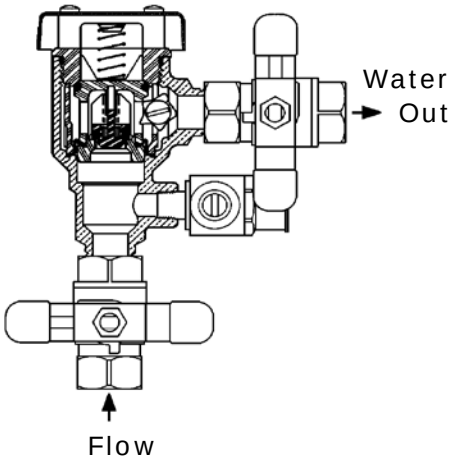

The pressure vacuum breaker (PVB) assembly evolved from the need to have a testable atmospheric vacuum breaker. The PVB contains an internally loaded check valve and an internally loaded air inlet valve. The valves independently act with the air inlet valve located downstream of the check valve. Shut-off valves and test cocks are located at each end of the assembly. The PVB, unlike the atmospheric vacuum breaker, can be tested. The PVB protects against non-health hazards or health hazards under backsiphonage only. The pressure vacuum breaker is not designed to protect against back pressure. Based on the design and operation of PVB, the following criteria must be implemented:

1. Shut-off valves may be installed on the downstream of PVB; and,
2. A minimum clearance of 12 inches above all downstream piping must be established.

Double-Check Valve

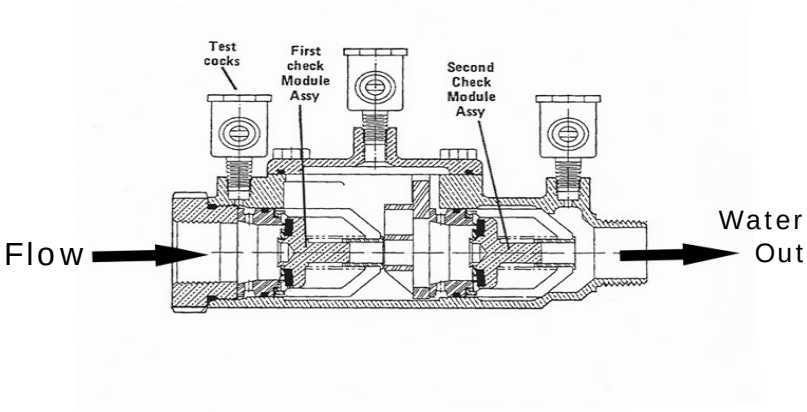

The double-check valve (DCV) consists of two independently acting, resilient seat check valves located between two tightly closing shut-off valves, together with suitable test cocks, and stop valves arranged so that the main check valves can be tested for water tightness.

This device is one of the oldest types of backflow preventers, dating back to the late 19th century. An approved double-check valve device is regarded as an assembly that meets the requirements of American Water Works Association (AWWA) Standard for Double-Check Valve Backflow Prevention Assembly (AWWA C510-07) or an assembly that has been approved by a testing laboratory sanctioned by the Conference of State Sanitary Engineers.

Reduced-Pressure Principle Backflow Preventer

An approved Reduced-Pressure Principle device (RP) is regarded as an assembly that meets the requirements of the AWWA Standard for Reduced-Pressure Principle Backflow Prevention Assembly (AWWA C511-07) or an assembly that has been approved by a laboratory sanctioned by USC or Plumbing Code. The reduced-pressure principle backflow preventer, introduced to the water supply industry about 1942, is safer than the double-check valve. The device consists of an automatic differential-pressure valve located between two or more independently acting, spring-loaded, resilient seat-check valves. These seat-check valves are, in turn, located between two tightly closing shut-off valves. Suitable test cocks are provided for testing the tightness of the main check valves. Since this device discharges to the atmosphere, it can be used where codes call for an air gap. Backflow assemblies installed in a confined space are not recommended. For example, the RP cannot be installed in pits.

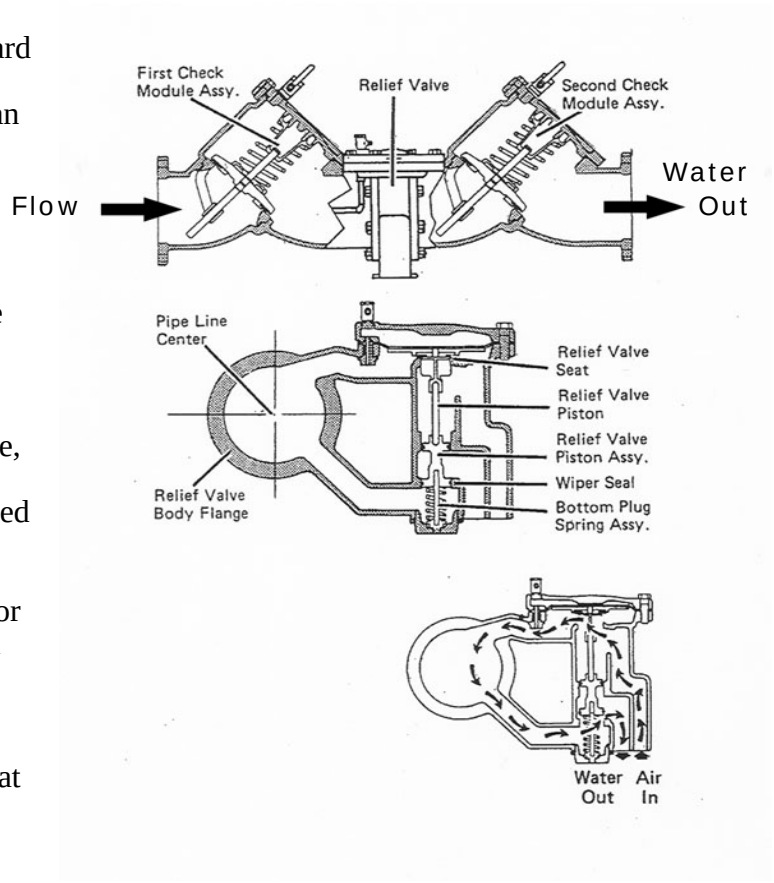

The RP operates on the hydraulic principle that water will not flow from a zone of lower pressure to a zone of higher pressure. As a differential-pressure valve, the relief valve is held in a closed position when the pressure on the supply side is higher by a prescribed amount than that in the zone between the two main check valves. When the pressure on the supply side of the unit falls below a set value, the relief valve opens, and the intermediate zone discharges to atmosphere. If the pressure on the discharge side of the device becomes higher than the supply pressure and the second-check valve malfunctions, the intermediate zone also discharges to atmosphere. An outstanding advantage that the reduced-pressure principle backflow preventer has over the double-check valve is the visible indication of malfunctioning long before a danger of backflow exists. Hence, repairs can be made while the device is still effectively acting as a backflow preventer.

The AWWA Standard for Reduced-Pressure Principle Backflow Prevention Assembly (C511-07) details the requirements for design, materials of construction, and operation of the devices in all sizes. AWWA Manual M14 provides guidelines for the operation of double-check valves and reduced-pressure principle devices.

In the Los Angeles area, the reduced-pressure principle device has been used since 1944 and has given excellent service. In more than 100,000 tests conducted at the University of Southern California by the Foundation for Cross Connection Control Research, there has never been a case of backflow, as indicated by sickness or death, where this device has been used.

More than 200 of these devices are used at atomic energy installations. At the Oak Ridge National Laboratory, exhaustive tests were conducted in 1962 to determine whether the device would provide an adequate air-gap separation. The reduced-pressure principle device was tested under varying conditions, including ionic diffusion, lower pressure on the supply side, and water hammer on the discharge side. The report states, in part: “Using a solution of manganese and potassium nitrates as a non-radioactive tracer, backflow from the discharge side to the supply side was not detectable by activation and radiochemical analysis having a sensitivity of 0.2 ppb of manganese.”

Hose Bibb Vacuum Breaker

The hose bibb vacuum breaker is designed specifically to be mounted on a faucet to prevent backsiphonage. It may be used on a wash basin or laboratory faucet or outside hose bibb. This unit can readily be subject to back pressure by simply having the hose outlet higher than the faucet. However, this device is better than no protection at all.

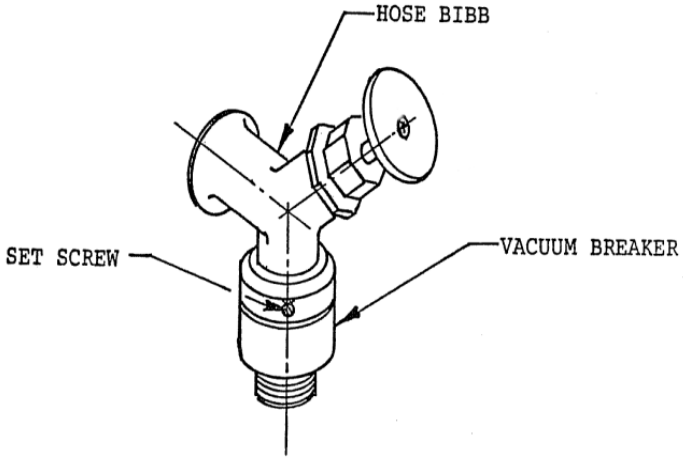

HOSE BIBB VACUUM BREAKER

Proper Selection of Backflow Prevention Devices

When selecting a backflow prevention device, whether it is used for a cross connection at the system connection or a cross connection at the point of use, the following questions will help determine which device will be most appropriate:

1. Is it an indirect or direct cross connection? An indirect cross connection is subject to backsiphonage only, while a direct cross connection is a connection which is subject to back pressure,
2. What is the degree of hazard? A “low hazard pollutant” shall mean a substance which is only aesthetically objectionable (i.e. bacteriological, unusual taste, odor, beverages, etc.). A “high hazard contaminant” shall mean a substance that could cause illness or death if ingested (i.e. toxic chemicals, radioactive materials, etc.).
3. Is the system under continuous use or pressure for more than 12 of any 24-hour period with no shut-off valves or obstructions downstream? The pressure vacuum breaker assembly may be used under continuous pressure, while the atmospheric vacuum breaker must not be used under continuous pressure.
4. What hydraulic conditions will the backflow prevention device experience at the point of connection? Backflow prevention assemblies are to be used within their rated operating conditions. A backflow prevention device which is over specified will increase the cost unnecessarily. Engineering data from the manufacturer should be consulted when selecting a backflow prevention device.

Examples of cross connections and the recommended type of backflow protection can be found in Appendix D.

Thermal Expansion

When installing a backflow prevention device, attention must be paid to the thermal expansion of water downstream from the point of isolation. The thermal expansion of water confined in pipes and fixtures could increase the water pressure resulting in a catastrophic failure. Facilities with water heaters and double-check valves or reduced-pressure principle backflow preventers should include a pressure relief valve, expansion tank or other device to accommodate thermal expansion. The smaller the isolated system, the less inherent tolerance to thermal expansion exists. Therefore, pressure relief devices are essential in residential facilities which are equipped with water heaters and backflow prevention devices.

Reported Backflow Incidents Past and Present in Indiana

There are no reporting requirements nationally for backflow incidents, and no central repository for backflow incident information. Nonetheless, data on backflow incidents have been actively collected by several organizations, including the following:

- Centers for Disease Control (CDC), the federal agency that tracks epidemiology of illnesses as reported by doctors and health care providers.
- Cross Connection Control Committee of the Pacific Northwest Section of the American Water Works Association (AWWA PNWS), a technical and educational association for the drinking water industry.
- University of Southern California's (USC's) Foundation for Cross Connection Control and Hydraulic Research, a water engineering research and industry standards development organization.
- American Backflow Prevention Association (ABPA), a training and advocacy association for the water system industry.

Below are some examples of backflow incidents within Indiana:

- In 2011, untreated river water seeped into an old storage tank which was cross connected to a potable water storage tank. The cross connection was not protected with a backflow assembly and only had a gate valve which failed allowing river water to enter the distribution piping system.
- In 2010, an Indiana restaurant shut off its own plumbing system to accomplish an upgrade which lowered their plumbing system pressure. Backflow occurred through a detergent mixer and blue colored contaminated water was served to customers.
- In 2005, the drinking water supply for an Indiana town was directly connected with pond water being utilized for a fire suppression system in a local facility. The interconnection was separated only by a single check valve.
- In 2004, the pressure relief valve for a residential water heater was removed and plugged, causing the water heater to explode. The meter for the service connection was equipped with a check valve only.
- In 2002, North Liberty School domestic plumbing was contaminated with isopropyl alcohol.
- In 2001, an electric power and light company's ground water wells were directly connected to city water mains causing bacteriological contamination.
- In 2000, a rubber seal factory paint sprayer gun was directly connected to the drinking water supply for cleaning purposes.
- In 1996, following a water main flushing, a Huntington, Indiana resident complained of low water pressure. Upon removing the house meter, it was discovered that the meter had been clogged with resin that had backsiphoned from a water softener while the main was being flushed.

- In 1995 a chemical company was washing and flushing a tank when the flush water was backsiphoned into the potable water system inside the building. The backflow prevention device failed.
- In 1993 the potable water of an industrial facility became contaminated with soluble oil when an internal backflow device was bypassed.
- In 1992 antifreeze backflowed into a university laboratory's potable water. A nearby water main break had caused the backsiphonage of antifreeze from a cooling system. The reduced-pressure principle device had failed.
- In 1992 a school found pink-colored water at the dishwashing station. A chemical treatment for the boiler had backsiphoned due to a faulty check valve.
- In 1990 a middle school experienced a backflow of antifreeze from the school's boiler make-up water and air-conditioning units. There was no backflow preventer on either water line at the time of the incident.
- In 1987 a government building experienced backsiphonage from a direct connection of laboratory equipment, dishwashing units, cooling towers, auxiliary wells, etc. into the potable water lines.

Summary

In closing, a community has only one effective weapon to protect potable water: *control*.

The following essential points should serve as a constant reminder to any jurisdiction maintaining a cross connection control program:

1. Cross connections are a public health problem. Control is vital.

2. Separate piping systems for potable and nonpotable water, or wastewater, offer the optimum means to protect potable water systems from contamination. The maintenance of complete separation, when both types of systems are in the same building, is extremely difficult. It is a tremendous task to make a complete, detailed survey of a large industrial complex. Cross connections are sometimes hidden underground, in walls or in water-using equipment. Frequent piping changes often result in new cross connections. In addition, the cost of periodic cross connection inspections is thought to be considerable by many.

3. The responsibility for eliminating cross connections in public water systems has been placed squarely on the shoulders of the water purveyor. A water purveyor's liability cannot be shifted to any other person or authority. They can be held responsible for another authority's acts or lack of action should negligence be shown. The courts of the United States and Indiana have upheld this position.

4. It is important for local authorities to prioritize the protection of their community's water supply. Local authorities must adopt a cooperative attitude, apply their enforcement powers vigorously and provide adequate ordinances, legal advice and assistance, definitive directives and lists of approved devices classified by use.

5. If local building ordinances fail to cope with in-plant, cross connection problems, water purveyors have no alternative but to protect the public water supply from contamination originating in a customer's water system. Water purveyors have adopted a control system called "cross connection control by containment." This simply means that the purveyor installs, or requires to be installed, a suitable backflow preventer at the customer's service connection, on the downstream side of the meter. Responsibility for cross connections within a facility is thus placed on its owners, but the purveyor's water supply is protected against any possibility of contamination so long as the backflow preventer is maintained and tested at the prescribed intervals. Because of the difficulty in tracing out the complexity of water lines in a plant, a containment approach is a necessity.

Appendix A: Sample Test Report Form

Backflow Prevention Device Test and Maintenance Report

Test for (circle appropriate option): DCV RP PVB SVB AVB

DCV = Double-Check Valve, RP = Reduced Pressure Principle, PVB = Pressure Vacuum Breaker, SVB = Spill-Resistant Vacuum Breaker, AVB = Atmospheric Vacuum Breaker

	Reduced Pressure Principle				
	Double Check Valve Assembly		Relief Valve	PVB/SVB	AVB
	Check Valve # 1	Check Valve # 2			
Initial Test	Held at ____ PSID Leaked ☐	Held at ___PSID Leaked ☐	Opened at: _____ PSID Did not Open ☐	Air Inlet Opened at _____ PSID Did Not Open ☐	Free Movement of Air Inlet Valve Free Fall ☐
Repairs and Materials Used					Cleaned ☐ Replaced ☐
Test After Repair	_____ PSID Closed Tight ☐	_____ PSID Closed Tight ☐	Opened at: _____ PSID	Air Inlet Opened at: _____ PSID Check Valve: _____ PSID	
Installation	Improper ☐ Comments:		Improper ☐ Comments:	Improper ☐ Comments:	Improper ☐ Comments:

The above test result is certified to be true. **Inspection tag installed?** ☐

TEST BY:
*First and Last Name:*_____ *Registration Number:*_____

*Address:*_____ *Date of Inspection:*_____

REPAIRED BY:
*First and Last Name:*_____ *Registration Number:*_____

*Address:*_____ *Date of Inspection/Repaired:*_____

Appendix B: Works Cited

American Water Works Association. (1990). *Manual of Water Supply Practices, Recommended Practice for Backflow Prevention and Cross Connection Control, AWWA M14. Second edition*. Denver: American Water Works Association.

American Water Works Association. (1992). *AWWA Standard for Double Check Valve Backflow-Prevention Assembly (ANSI/AWWA C510-07)*. Denver: American Water Works Association.

American Water Works Association. (1992). *AWWA Standard for Reduced-Pressure Principle Backflow-Prevention Assembly (ANSI/AWWA C511-07)*. Denver: American Water Works Association.

Foundation for Cross Connection Control and Hydraulic Research. (2009). *Manual of Cross Connection Control, Tenth Edition*. Los Angeles: Foundation for Cross Connection Control and Hydraulic Research.

The Great Lakes-Upper Mississippi River Board of Public Health and Environmental Managers. (2012). *Recommended Standards for Water Works*. Albany: The Great Lakes-Upper Mississippi River Board of Public Health and Environmental Managers.

United States Environmental Protection Agency, Office of Water, Office of Drinking Water. (2003). *Cross Connection Control Manual*. Washington, D.C.: U.S. EPA.

Appendix C: Additional and Expanded Definitions (Definitions only apply for purposes of 327 IAC 8-10)

Air-gap separation - the unobstructed vertical distance through the free atmosphere between the lowest opening from any pipe or faucet supplying water to a tank, plumbing fixture or other device and the flood level rim of the receptacle. An "approved air-gap separation" shall be at least double the inside diameter of the supply pipe or six inches, whichever is less as measured vertically above the top rim of the vessel; in no case shall the gap be less than one inch. In cases where: (A) a side wall, rib, or similar obstruction is spaced closer than three diameters from the piping affecting the air gap; or (B) two intersecting walls are located closer than four pipe diameters from the piping affecting the air gap; a minimum of three times the diameter of the discharge pipe or six inches, whichever is less, is required above the maximum recorded flood level or above the flood level rim of the receiving vessel, whichever is higher.

Approved - the term "approved" is used in reference to a water supply system or backflow prevention device or method. It shall mean a prevention strategy that is considered acceptable by the appropriate regulatory agency.

Auxiliary supply - any water source or system other than the public water supply that may be available in the building or premises.

Backflow - the flow of any foreign liquid, gas or substance into the distributing pipe lines of a potable supply of water. Backflow may occur under two conditions: pressure greater than atmospheric (see **back pressure**), and pressure that is subatmospheric (see **backsiphonage**).

Backflow prevention device, approved - a device that has been investigated and approved by IDEM and the water purveyor having jurisdiction. Approval of the device may be left solely to the water purveyor at the discretion of the regulatory agencies.

Backflow prevention device tester, certified - a person in good standing who is qualified to test backflow prevention devices and has proven their competency to the satisfaction of the appropriate regulatory agencies.

Back pressure - backflow caused by a pump, elevated tank, boiler or other means that could create pressure within the system greater than the supply pressure.

Backsiphonage - a form of backflow due to a negative or subatmospheric pressure within a water system.

Consumer - the owner or operator of a private potable water system served by a public water supply.

Contamination - an impairment of a public water supply's quality caused by the presence of any foreign substance (organic, inorganic, radiological or biological) to a degree which creates a hazard to public health through poisoning or through the spread of disease (see **pollution**) or creates a nuisance condition such as discoloration, staining, tastes or odors.

Cross connection, point of - a specific point or location in a public or a consumer's potable water system where a cross connection exists.

Hazard, degree of - expresses the results of an evaluation of a health, system or plumbing hazard.

Hazard, health - any condition, device or practice in a water supply system and its operation that creates, or may create, a danger to the health and well-being of a consumer.

Hazard, high (contamination) - a physical or toxic hazard which could be detrimental to human health.

Hazard, low (pollution) - a hazard which could cause aesthetic problems or have a detrimental effect on the quality of water in a potable water system.

Hazard, plumbing - a cross connection in a consumer's potable water system that may permit backsiphonage in the event of a negative pressure in the supply line or due to back pressure in which the downstream piping pressure is greater than the supply line pressure. Unprotected plumbing-type cross-connections are considered to be health hazards. They include, but are not limited to, faulty connections to fixtures such as toilets, sinks, water softeners, tubs, lavatories, wash trays and domestic washing machines.

Hazard, system - a threat to the physical quality of the public water or the consumer's potable water system. Also included is the introduction of a material not dangerous to health but aesthetically objectionable that would have a degrading effect on the quality of the potable water in the system.

Industrial fluid - any fluid or solution that may chemically, biologically or physically degrade the approved water supply.

Industrial line - a separate water piping system serving water-using devices, with a backflow preventer or air-gap separation on the line where the water is taken from the potable water line, also known as the point of takeoff.

Industrial piping system, consumers - a system used by a consumer for the transmission or storage of anything other than a water supply intended or used for human consumption or food processing. Such a system would include all pipes, conduits, tanks, receptacles, mixtures, equipment and appurtenances used to produce, convey or store substances that are or may be polluted.

Isolation - installation of a backflow prevention device at the point of a service connection on the downstream side of the water meter.

Nonpotable water - water not safe for drinking, personal or culinary use.

Operator - the person in direct or responsible charge and supervising the operation of a wastewater or water treatment plant or a water distribution system.

Person - any person, firm, organization, partnership, trust or association of persons, joint venture, corporation or company. The United States, the State of Indiana and any officer or agent thereof are also included in this definition.

Points of delivery - see **Service connection**.

Pollution - the presence of any foreign substance in water that tends to degrade water quality so as to impair its potability or usefulness. The substance can be organic, inorganic, radiologic or biologic.

Potable water - water that is safe for drinking, personal or culinary use.

Premises - an integrated land area, including improvements, undivided by public thoroughfares or water distribution mains where all parts of the land area are operated under the same management and for the same purpose.

Protection device - any of the following devices: 1) air-gap separation; 2) approved double-check valve assembly; 3) approved reduced-pressure principle backflow prevention assembly, or 4) atmospheric or pressure vacuum breaker.

Service connection - the terminal end of a service from the public water supply where the water purveyor surrenders jurisdiction and sanitary control over the water at its point of delivery to the consumer's water system. If a meter is installed at the end of the service connection then the service connection would be the downstream terminus of the meter.

Water delivered (or delivered water) - any water supplied by a water purveyor from a public water supply to a consumer's water system after it has passed the point of delivery and is no longer under the sanitary control of the water purveyor.

Water purveyor - the owner or operator of a public water supply.

Water supply, approved - any public or consumer's potable water supply that has been investigated and approved by IDEM. IDEM shall have the final judgment as to safety and potability, in determining what constitutes an approved water supply.

Water system, consumer's - any potable or nonpotable water system located on a consumer's premises, whether supplied by a public water supply or an auxiliary water system.

Appendix D: Examples of Cross Connections and Recommended Type of Backflow Protection

Any fixture with a submerged inlet could be a cross connection hazard. Potential cross connections exist between the consumer's water system and the following fixtures. The devices listed are only recommendations. The type of device or method of protection required should be commensurate with the degree of hazard.

AG – Air Gap, AVB – Atmospheric Vacuum Breaker, DCV – Double Check Valve, PVB – Pressure Vacuum Breaker, RP – Reduced Pressure, SPVB – Spill Prevention Vacuum Breaker

Fixture	Device
Air-conditioning equipment with dual safe and unsafe water supplies or with direct sewer connection for wastewater	RP
Aquariums with a below-the-rim water inlet	AG/RP
Aspirator on surgical, dental or industrial equipment operated by water ejector	AVB
Aspirators on chemical sprayers	AVB
Automatic device for filling tanks, boilers and vats which have overflow connections to a sewer	AG/AVB
Automatic soap dispenser	AG/AVB
Any direct connection between water pipes and sewers, even though gate valves are used	RP
Any individual vat, tank, etc., which has an inverted water supply connection or a water supply connection below the top of the spill rim	RP
Baptistery with below-the-rim water connection	AG/AVB
Bath with below-the-rim water connection	not allowed
Bedpan washer and sterilizer with below-the-rim water connection, or with inverted water supply subject to direct contamination	AVB
Bidet with submerged inlet	AVB
Boilers	AG/RP
Bird bath with submerged inlet	AG/RP
Cellar drains of the water ejector type	AG
Cistern supply in private home, cross connected with the city supply	RP
Coffee urn with direct water supply and sewer connections	AVB
Combination faucet with one safe and one unsafe supply	AVB
Condenser on medical and industrial equipment	AG/RP
Cuspidor with water supply connection	RP
Commercial dishwashing machines	AVB
Dual water supplies, such as hot water supply from an unsafe source	AG/RP
Dental cuspidor and saliva ejector with unprotected water supply connection	RP
Drinking fountain with submerged water inlet or with the water supply line passing through the drain	not allowed
Dishwasher with water inlet below the rim	AVB

Dual water supplies cross connected in factories, etc.	RP
Egg boiler having direct water supply and sewer connections	AVB
Ejector actuated by direct water connection	RP
Filter with waste connected direct to sewer	AG
Fish pond with submerged water inlet	AG/RP
Floor drain with flushing connection, often used in operating rooms	AVB
Flushometer valve not protected with siphon breaker	AVB
Foot tub with submerged water inlet	not allowed
Floor drain having automatic device for sealing	AG
Frost-proof hydrant, whether or not the valve drains to the sewer or to the ground surrounding the sewer	AVB
Fire hydrant with drain connection to sewer or weephole to the sewer or to the ground surrounding the sewer	RP
Garbage can washers	AVB/PVBA
Gas-type chlorinator with dual feed to mixing basin and clear well	AG/RP
Grease trap with water supply connection for flushing	AG
Hose for sink, laundry tray, soap kettles, etc.	AVB
Hose outlets for washing down industrial, commercial or other equipment	AVB
Hydraulic elevator with waste connection direct to sewer	AG
Hospital equipment such as autoclave, instrument sterilizer, utensil sterilizer, etc., with submerged inlets and with direct connections to the sewer	RP
Industrial processes requiring direct water connections	RP
Industrial water supplies process appliances with direct water supply connections not having adequate air gaps	RP
Kitchen fixtures with common waste and supply lines	not allowed
Kitchen sink garbage disposal or grinder	AG/AVB
Lawn sprinkling systems	SPVB/PVB/DCV
Lawn sprinkling systems with automatic chemical dispenser	SPVB/PVB/RP
Leaky water main or service near sewer	RP
Make-up water tank at swimming pool with below-water inlet	AG
Ordinary home and store-type evaporative air cooling units, with a float valve to maintain water at a constant level	RP
Pump used for dual purposes, with one safe and one unsafe supply	AG/RP
Pump used for unsafe material having a direct water connection for priming	AG/RP
Pump pit with drain connection to sump or sewer line	AG
Rubber hose with hand control or self-closing faucets attached, as used in connection with baths, industrial vats, containers, etc.	AVB
Refrigeration equipment with water cooling	AG/RP
Rubber hose connection extending water line to below the overflow rim of sinks, lavatories, tanks, tubs, laboratory apparatus, etc.	AVB
Sealing ring on sewage pump with direct water connection	AG/RP

Sewage lift with direct water connection	AG/RP
Sinks with below-the-rim water inlets	Not allowed
Sludge line with direct water connection for flushing	AG/RP
Sterilizers of all kinds, both medical and dental, with submerged inlets	RP
Still with direct water connection	RP
Steam table with water supply connection entering the bottom of the table	AVB
Seat-action water closet with pressure tank having a flush valve in or attached to the bowl	AVB
Swimming pool with direct water connection	AG/RP
Siphon flush tank with water connection below the overflow rim	AG
Therapeutic bath with submerged inlet	AG
Toilet equipped with flushometer valve attached to the bowl	AVB
Tumbler washer in beverage sink having submerged inlet	AG/AVB
Tank with inverted supply or below-the-rim supply	AG
Urinal having direct flushing device	AG
Vat with inverted supply or below-the-rim supply	AG/RP
Water softener waste discharge or overflow pipe	AG
Water cooler improperly designed and using toxic refrigerant which may pollute the water supply	RP
Watering troughs (dairies, hog farms and horse stables)	AG/AVB
Water-operated aspirator on a suction flask in laboratories, etc.	AVB
Water-operated aspirator in undertaking establishments, hospitals, etc.	AVB
Water closet of the hopper type with pressure tank having a flush valve in or attached to the bowl	AVB
X-ray developing tank with submerged water supply inlet	RP
Yard hydrant having drip openings below ground surface that may allow polluted ground water to drain into the water supply pipes	RP