National Pollutant Discharge Elimination System

FACT SHEET

U.S. Steel Corporation, Midwest Plant

June 29, 2010

Indiana Department of Environmental Management

100 North Senate Avenue
Indianapolis, Indiana 46204
(317) 232-8603
Toll Free (800) 451-6027
www.idem.IN.gov

Permittee:	U.S. Steel Corporation, Midwest Plant One North Broadway, MS 70-A Gary, Indiana 46402
Existing Permit Information:	Permit Number: IN0000337 SIC Code 3316 Cold Rolled Steel EPA Reference Number: INR000109017
Source Contact:	Robert Lange (219) 888-4500 Manager, Environmental Control
Source Location:	6300 U.S. Route 12 Portage, Indiana
Receiving Stream:	Portage-Burns Waterway (Burns Ditch)
Proposed Action:	Renewal
Source Category	Major – Industrial
Permit Writer:	Matthew Carmichael Senior Environmental Manager – (317) 233-5961

Table of Contents

1.0 Introduction **3**
2.0 Facility description **4**
2.1 General 4
2.2 Wastewater Treatment 5
2.3 Outfall Locations 6
3.0 Permit History **7**
3.1 Compliance history 7
4.0 Receiving Water **7**
4.1 Receiving Stream Water Quality 8
4.2 Great Lakes System Discharger Requirements 8
5.0 Permit limitations **8**
5.1 New Permit Limits 9
5.2 Technology-Based Effluent Limits 13
5.3 Water Quality-Based Effluent Limits 14
5.4 Original Permit Limits 15
5.5 Biomonitoring Requirements 16
5.6 Antidegradation 16
5.7 Stormwater Requirements 19
5.8 Water Treatment Additives 20
5.9 316(b) Requirements 21
5.10 Reporting Requirements for Solvents, Degreasing Agents, Rolling Oils, Water Treatment Chemicals and Biocides 22
6.0 Permit Draft Discussion **23**
6.1 Wastewater Discharge Limitations 23
6.2 Reopening Clauses 33
6.3 Spill Response and Reporting Requirement 34
6.4 Pollutant Minimization Program Requirements 34
6.5 Antibacksliding 35
6.6 Permit Processing/Public Comment 35

1.0 INTRODUCTION

The U.S. Steel Corporation has applied for the renewal of NPDES Permit No. IN0000337 for their Midwest Plant. The permit was transferred from the National Steel Midwest Division to the U.S. Steel Corporation in June, 2003. A permit modification was issued May 23, 1991 to incorporate effluent limitations for total residual chlorine and total residual oxidants resulting from the use of water treatment additives to control zebra mussels. The permit expired in March, 1995, and has since then been administratively extended. A five-year permit is proposed.

Development of a Fact Sheet for NPDES permits is required by Title 40 of the Code of Federal Regulations, Section 124.8 and 124.6. This Fact Sheet is prepared in order to document the technical basis and risk management decisions that are considered in the determination of water quality based NPDES Permit effluent limitations. The technical basis for the Fact Sheet may consist of evaluations of promulgated effluent guidelines and other treatment-technology based standards, existing effluent quality, instream biological, chemical and physical conditions, and the allocations of pollutants to meet Indiana Water Quality Standards. U.S. Steel Corporation Midwest Plant effluent limits based on available treatment technologies are required by Section 301(b) of the Clean Water Act. Many of these have already been established by U.S. EPA in the effluent guideline regulations (a.k.a. categorical regulations) for industry categories in 40 CFR Parts 405-499. If regulations have not been established for a category of dischargers, IDEM may establish technology-based limits (TBELs) based on best professional judgment (BPJ).

IDEM reviews the need for water quality-based effluent limits (WQBELs) on a pollutant-by-pollutant basis. Wasteload allocations are used to develop these limits based on the pollutants that have been detected in the discharge, and the receiving water's assimilative capacity. The assimilative capacity depends on the flow in the water receiving the discharge, and the concentration of the pollutant upstream. The greater the upstream flow, and the lower the upstream concentration, the greater the assimilative capacity is. Assimilative capacity may represent dilution (as in allocations for metals), or it may also incorporate the break-down of pollutants in the receiving water (as in allocations for oxygen-demanding materials).

The need for water quality-based limits is determined by comparing the wasteload allocation for a pollutant to a measure of the effluent quality. The measure of effluent quality is called PEQ – Projected Effluent Quality. This is a statistical measure of the average and maximum effluent values for a pollutant. As with any statistical method, the more data that exists for a given pollutant, the more likely that PEQ will match the actual observed data. A PEQ is calculated by multiplying the highest measured value by a statistical factor that accounts for effluent variability and limitations associated with small data sets. For example if only one sample exists, the factor is 6.2, for two samples - 3.8, for three samples - 3.0. The factors continue to decline as samples sizes increase. If the pollutant concentrations are fairly constant, but the data set is small, these factors may make PEQ appear larger than it would be shown to be if more sample results existed.

In addition to the reasonable potential approach detailed above EPA has provided additional guidance to IDEM on determining the need for water quality based effluent limits at the final outfall using TBELs determined appropriate at an internal outfall. This approach is separate from the RPE statistical analysis done during the modeling phase of permit development. Once the TBELs are calculated these are then compared to the WQBELs using the allowed mass calculated for the TBELs. If the TBELs calculated mass exceed the WQBELs mass then there is a reasonable potential to exceed a water quality criterion and WQBELs are required at the final outfall.

2.0 FACILITY DESCRIPTION

2.1 General

The U.S. Steel Corporation Midwest Plant finishes coils received from other U.S. Steel plants into cold rolled, galvanized, chromium or tin plated strip and sheet products. Activities at the permitted facility include acid pickling, cold rolling, alkaline cleaning, operation of a sheet temper mill, continuous annealing, electro-galvanizing, and tin electroplating.

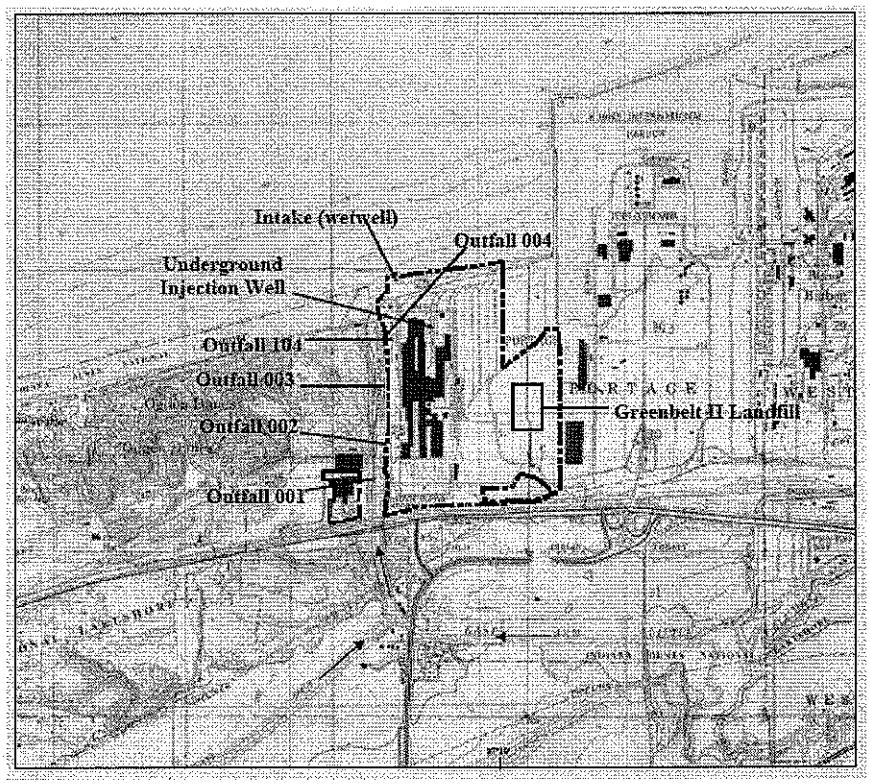

Figure 1: Facility Location

http://www.mapquest.com/maps?city=Portage&state=IN&address=6300+U.s.+Route+12

6300 U.S. Route 12
Portage, Indiana
Porter County

2.2 Wastewater Treatment

Wastewater and stormwater runoff regulated by the NPDES permit is discharged from four separate external outfalls 001, 002, 003, and 004 (direct discharges to waters of the state). Internal Outfall 104 currently contributes process wastewater from steel finishing and from the Greenbelt II Landfill to Outfall 004. Plans for new chrome treatment plant have been submitted to reduce total chromium loading to Burns Waterway from Outfall 004 via proposed internal Outfall 204. To ensure that the contribution in wastewater from Internal Outfall 204 does not constitute a new or increased discharge in accordance with the antidegradation requirements under 327 IAC 5-2-11.7(a)(2), a virtual outfall has been added to the permit as compliance point 304. Limits originally calculated for Internal Outfall 104 have been applied to compliance point 304. To account for the combined wastestreams of 104 and 204, reporting requirements for 304 will be the sum of mass for both Internal Outfalls 104 and 204 which will confirm that the contribution from 204 is not causing a significant lowering of water quality in Lake Michigan for Outfall 004. Outfall 500 represents the combined thermal discharge from Outfalls 002, 003 and 004. The outfalls, and corresponding operations contributing to flow, are outlined in Table 1 below:

Table 1

Outfall	Operations Contributing to Flow	Treatment System	Discharge Point
001	Storm water runoff	None	Burns Ditch
102 (internal outfall)	Storm water runoff	None	002
002	Storm water runoff, non-contact cooling water	None	Burns Ditch
103 (internal outfall)	Storm water runoff	None	003
003	Storm water runoff, non-contact cooling water	None	Burns Ditch
104 (internal outfall)	Process wastewater, Greenbelt II landfill leachate (prior to outfall 204 activation)	*see Table 2	004
204 (internal outfall)	Chrome Process wastewater, Greenbelt II landfill leachate	*see Table 2	004
304 (compliance point)	Internal Outfalls 104 and 204	-	004
004	Process wastewater and Greenbelt II landfill leachate from 104 & 204, storm water runoff, non-contact cooling water	*see Table 2	Burns Ditch
500	Thermal discharge from 002, 003, and 004	-	Burns Ditch

Table 2

Outfalls 104 and 204 Treatment Description
Pretreatment (to Final Wastewater Treatment) Flow equalization (chemical addition) Mixing (chemical addition) API oil separation (skimming)
Final Wastewater Treatment (to Outfall 104) Flow equalization (aeration) Skimming Mixing (chemical addition) Flocculation (clarification) Sedimentation (skimming) Discharge to Outfall 004 Sludge thickening (chemical addition) Sludge dewatering filter press Sludge disposal to landfill
Chrome Treatment (to Outfall 204) Chemical treatment (reduction) Mixing

The discharge of non-contact cooling water - previously discharged from Outfall 005 - and sanitary wastewater - previously discharged from Outfall 006 - have been discontinued. Sanitary wastewater from the permitted facility is now directed to the City of Portage WWTP.

Production rates for the tin and chromium electroplating operations are based on process wastewater flow rates subject to regulation under 40 CFR 433. The storm water discharged at Outfall 001 receives no treatment. Noncontact cooling water discharged at Outfalls 002, 003 and 004 is dechlorinated seasonally with sodium metabisulfite. Currently, treatment of Greenbelt II Landfill leachate and process wastewater discharged at Outfall 104 (and ultimately Outfall 004) includes pretreatment oil separation, acid neutralization, chemical treatment-equalization, skimming, aeration, pH control, coagulant addition, mixing, flocculation, and settling. The permittee utilizes a chrome reduction treatment system that converts hexavalent chromium to trivalent chromium for Outfall 104. The trivalent chromium is directed to the main WWTP where it is removed as a metal hydroxide. Similar to the existing chrome treatment plant, the new chrome treatment plant for proposed Outfall 204 will treat hexavalent chrome wastewaters via a reduction process using sodium bisulfite, sulfuric acid, and sodium hydroxide. The new chrome treatment plant will also treat leachate from the Greenbelt II landfill and have dedicated sludge management equipment.

2.3 Outfall Locations

<u>001</u>
Latitude: 41° 37' 19"
Longitude: 87° 10' 36"

<u>002</u>
Latitude: 41° 37' 23"
Longitude: 87° 10' 33"

003
Latitude: 41° 37' 35"
Longitude: 87° 10' 33"

004
Latitude: 41° 37' 51"
Longitude: 87° 10' 33"

104
Latitude: 41° 37' 51"
Longitude: 87° 10' 33"

204
Latitude: 41° 37' 51"
Longitude: 87° 10' 20"

3.0 PERMIT HISTORY

3.1 Compliance history

Recent violations of numeric permit limitations include those for pH (July 2005) at Outfall 004 and pH (April 06) at Outfall 104. Additionally, the permittee reported the presence of foam (Feb 06) and coloration (Oct 06) at Outfall 004. No other compliance issues were noted at the time of permit renewal.

http://www.epa-echo.gov/echo/compliance_report_water_icp.html
[Link to EPA NPDES permit compliance]

4.0 RECEIVING WATER

The receiving stream for the discharge from all external outfalls regulated under the NPDES permit is Portage-Burns Waterway (Burns Ditch). Portage-Burns Waterway, a tributary to the Indiana portion of the open waters of Lake Michigan, is located within the Great Lakes system and is protected by Indiana's water quality standards for the Great Lakes system under 327 IAC 2-1.5. Portage-Burns Waterway is designated for full-body contact recreation and shall be capable of supporting a well-balanced, warm water aquatic community. The East Branch of Little Calumet River and its tributaries downstream to Lake Michigan via Portage-Burns Waterway are designated in 327 IAC 2-1.5-5(a)(3)(B) as salmonid waters and shall be capable of supporting a salmonid fishery. The Indiana portion of the open waters of Lake Michigan is designated in 327 IAC 2-1.5-19(b)(2) as an outstanding state resource water (OSRW). Discharges to tributaries of OSRWs are subject to the antidegradation implementation procedure for OSRWs in 327 IAC 5-2-11.7(a)(2).

The Q 7,10 low flow value of Portage-Burns Waterway is 110 cfs. The stream design flows used in the wasteload allocation analysis for the permitted discharge were calculated using daily mean flow data reported at USGS gaging station 04095090 Burns Ditch at Portage. This station is located at the bridge upstream of Outfall 002. The three outfalls are located approximately 0.06 miles (004), 0.4 miles (003) and 0.6 miles (002) upstream of Lake Michigan on the east bank of Portage-Burns Waterway. Daily mean flow data approved by the USGS are available for this station for the period October 1, 1994 through September 30, 2007. The U.S. EPA program DFLOW was used to calculate stream design flows using the daily mean flow data.

4.1 Receiving Stream Water Quality

Portage-Burns Waterway in Assessment Unit INC0164_T1108 is currently placed on Indiana's 2008 303(d) List of impaired waters for PCBs in Fish Tissue. The Lake Michigan shoreline is on the 2008 303(d) list for mercury and PCBs in fish tissue. The IDEM develops Indiana's 303(d) List of Impaired Waters every two years as part of the state's Integrated Water Monitoring and Assessment Report (IR), which is submitted to the U.S. EPA every two years in accordance with Sections 305(b) and 303(d) of the Clean Water Act (CWA). CWA Section 305(b) requires states to make water quality assessments and provide water quality reports to the U.S. EPA, and CWA Section 303(d) requires states to identify waters, through their Section 305(b) water quality assessments, that do not or are not expected to meet applicable water quality standards with federal technology based standards alone. Under CWA Section 303(d), states are also required to develop a priority ranking for these waters taking into account the severity of the pollution and the designated uses of the waters. Once this listing and ranking of impaired waters is completed, states are required to develop Total Maximum Daily Loads (TMDLs) for these waters in order to achieve compliance with the water quality standards. These requirements were met for the 2008 cycle by the submission of Indiana's IR to the U.S. EPA and the subsequent approval of Indiana's 303(d) list by that agency.

http://www.in.gov/idem/4680.htm
[link to water quality-limited database – 303d list]

http://www.in.gov/idem/4676.htm
[link to TMDL web site]

4.2 Great Lakes System Discharger Requirements

The permittee discharges to a waterbody that has been identified as a water of the state within the Great Lakes system. In addition to OSRW antidegradation implementation procedures, it is subject to other NPDES requirements specific to Great Lakes system dischargers under 327 IAC 2-1.5 and 327 IAC 5-2-11.2 through 327 IAC 5-2-11.6. These rules address water quality standards applicable to dischargers within the Great Lakes system and reasonable potential to exceed water quality standards procedures.

As required by 327 IAC 5-2-11.3(b)(2), Part II.A.16. of the renewal permit specifically prohibits the permittee from undertaking deliberate actions that would result in new or increased discharges of BCC's or new or increased permit limits for non-BCC's, without first proving that the new or increased discharge would not result in a significant lowering of water quality, or by submission and approval of an antidegradation demonstration to the IDEM.

5.0 PERMIT LIMITATIONS

Two categories of effluent limitations exist for NPDES permits: 1) Technology based effluent limits (TBELs), and 2) Water quality based effluent limits (WQBELs).

Technology based effluent limits are developed by applying the national effluent limitation guidelines (ELGs) established by EPA for specific industrial categories. Technology based effluent limits were established to require a minimum level of treatment for industrial or municipal sources using available technology. In the absence of federally promulgated guidelines can also be based upon BPJ. Technology based limits are the primary mechanism of control and enforcement of water pollution under the CWA. Technology based treatment requirements under section 301(b) of the CWA represent the minimum level of control that must be imposed in a section 402 permit [40 CFR 125.3(a)]. Accordingly, every individual member of a discharge class or category is required to operate their water pollution control technologies according to industry-wide standards and accepted engineering practices. This means that technology-based effluent limits based upon a BPJ determination are applied at end-of-pipe and mixing zones are not allowed [40 CFR 125.3(a)]. Similarly, since the statutory deadlines for BPT, BAT and BCT have all passed, compliance schedules are also not allowed.

Water quality based effluent limits are designed to be protective of the beneficial uses of the receiving water and are independent of the available treatment technology. The need for WQBELs is determined by application of the reasonable potential procedures contained in 327 IAC 5-2-11.5. WQBELs are developed using the water quality criteria in 327 IAC 2-1.5, the wasteload allocation procedures in 327 IAC 5-2-11.4 and the procedures for converting wasteload allocations into WQBELs in 327 IAC 5-2-11.6. In addition to numeric WQBELs, the narrative water quality criteria contained in 327 IAC 2-1.5-8 have been included in this permit to ensure that the narrative water quality criteria are met.

According to 40 CFR 122.44 and 327 IAC 5, NPDES permit limits are based on either technology-based limitations, where applicable, best professional judgment (BPJ), or Indiana Water Quality-Based Effluent Limitations, whichever is most stringent.

5.1 New Permit Limits

Outfall 002

DISCHARGE LIMITATIONS

Table 1

	Quantity or Loading			Quality or Concentration			Monitoring	Requirements
Parameter	Monthly Average	Daily Maximum	Units	Monthly Average	Daily Maximum	Units	Measurement Frequency	Sample Type
Flow	Report	Report	MGD	-	-	-	Weekly	24 Hour Total
Oil and Grease	------	------	-----	-	Report	mg/l	Weekly	Grab
Total Residual Chlorine	0.59	1.2	lbs/day	0.01	0.02	mg/l	Daily	Grab

Table 2

	Quality or Concentration			Monitoring	Requirements
Parameter	Daily Minimum	Daily Maximum	Units	Measurement Frequency	Sample Type
pH	6.0	9.0	s.u.	Weekly	Grab

Outfall 003

DISCHARGE LIMITATIONS

Table 3

Parameter	Quantity or Loading Monthly Average	Quantity or Loading Daily Maximum	Units	Quality or Concentration Monthly Average	Quality or Concentration Daily Maximum	Units	Monitoring Requirements Measurement Frequency	Monitoring Requirements Sample Type
Flow	Report	Report	MGD	-	-	-	Weekly	24 Hour Total
Oil and Grease	------	------	-----	-	Report	mg/l	Weekly	Grab
Total Residual Chlorine	1.6	3.1	lbs/day	0.01	0.02	mg/l	Daily	Grab

Table 4

Parameter	Quality or Concentration Daily Minimum	Quality or Concentration Daily Maximum	Units	Monitoring Requirements Measurement Frequency	Monitoring Requirements Sample Type
pH	6.0	9.0	s.u.	Weekly	Grab

Outfall 004

DISCHARGE LIMITATIONS

Table 5

Parameter	Quantity or Loading Monthly Average	Quantity or Loading Daily Maximum	Units	Quality or Concentration Monthly Average	Quality or Concentration Daily Maximum	Units	Monitoring Requirements Measurement Frequency	Monitoring Requirements Sample Type
Flow	Report	Report	MGD	-	-	-	5 X Weekly	24 Hour Total
Oil and Grease	Report	Report	lbs/day	Report	Report	mg/l	5 X Weekly	Grab
Mercury	Report	Report	lbs/day	Report	Report	ng/l	6 X Yearly	Grab
Silver	0.028	0.048	lbs/day	0.076	0.13	ug/l	2 X Monthly	24-Hr. Comp.
F. Cyanide	2.7	4.8	lbs/day	0.0075	0.013	mg/l	2 X Monthly	24-Hr. Comp.
Total Residual Chlorine	3.7	7.3	lbs/day	0.01	0.02	mg/l	Daily	Grab
Cadmium	2.8	4.8	lbs/day	0.0077	0.013	mg/l	2 X Monthly	24-Hr. Comp.
Copper	11	19	lbs/day	0.030	0.052	mg/l	2 X Monthly	24-Hr. Comp.
Whole Effluent Toxicity	------	------	------	1.5	------	TUc	Quarterly	24-Hr. Comp.

Table 6

Parameter	Quality or Concentration Daily Minimum	Quality or Concentration Daily Maximum	Units	Monitoring Requirements Measurement Frequency	Monitoring Requirements Sample Type
pH	6.0	9.0	s.u.	5 X Weekly	Grab

Outfall 104

DISCHARGE LIMITATIONS

Table 7

Parameter	Quantity or Loading Monthly Average	Daily Maximum	Units	Quality or Concentration Monthly Average	Daily Maximum	Units	Monitoring Measurement Frequency	Requirements Sample Type
Flow	Report	Report	MGD	-	-	-	5 X Weekly	24 Hour Total
TSS	Report	Report	lbs/day	Report	Report	mg/l	5 X Weekly	24-Hr. Comp.
Oil and Grease	------	Report	lbs/day	Report	Report	mg/l	5 X Weekly	3 grabs/24 Hr.
T. Chromium	Report	Report	lbs/day	Report	Report	mg/l	5 X Weekly	24-Hr. Comp.
Zinc	Report	Report	lbs/day	Report	Report	mg/l	5 X Weekly	24-Hr. Comp.
Lead	Report	Report	lbs/day	Report	Report	mg/l	Monthly	24-Hr. Comp.
Nickel	Report	Report	lbs/day	Report	Report	mg/l	Monthly	24-Hr. Comp.
Cadmium	Report	Report	lbs/day	Report	Report	mg/l	Monthly	24-Hr. Comp.
Copper	Report	Report	lbs/day	Report	Report	mg/l	Monthly	24-Hr. Comp.
Silver	Report	Report	lbs/day	Report	Report	mg/l	Monthly	24-Hr. Comp.
T. Cyanide	Report	Report	lbs/day	Report	Report	mg/l	5 X Weekly	24-Hr. Comp.
Hex. Chromium	Report	Report	lbs/day	Report	Report	mg/l	Weekly	Grab
Naphthalene	------	Report	lbs/day	------	Report	mg/l	Monthly	Grab
Fluoride	Report	Report	lbs/day	Report	Report	mg/l	Weekly	24-Hr. Comp.
Tetrachloro-Ethylene	-------	Report	lbs/day	Report	Report	mg/l	Monthly	Grab
Total Toxic Organics	------	Report	lbs/day	Report	Report	mg/l	Monthly	24-Hr. Comp.

Table 8

Parameter	Quality or Concentration Daily Minimum	Daily Maximum	Units	Monitoring Measurement Frequency	Requirements Sample Type
pH	Report	Report	s.u.	5 X Weekly	Grab

Outfall 204

DISCHARGE LIMITATIONS

Table 9

Parameter	Quantity or Loading Monthly Average	Daily Maximum	Units	Quality or Concentration Monthly Average	Daily Maximum	Units	Monitoring Measurement Frequency	Requirements Sample Type
Flow	Report	Report	MGD	-	-	-	5 X Weekly	24 Hour Total
TSS	Report	Report	lbs/day	Report	Report	mg/l	5 X Weekly	24-Hr. Comp.
Oil and Grease	------	Report	lbs/day	Report	Report	mg/l	5 X Weekly	3 grabs/24 Hr.
T. Chromium	Report	Report	lbs/day	Report	Report	mg/l	5 X Weekly	24-Hr. Comp.
Zinc	Report	Report	lbs/day	Report	Report	mg/l	5 X Weekly	24-Hr. Comp.
Lead	Report	Report	lbs/day	Report	Report	mg/l	Monthly	24-Hr. Comp.
Nickel	Report	Report	lbs/day	Report	Report	mg/l	Monthly	24-Hr. Comp.
Cadmium	Report	Report	lbs/day	Report	Report	mg/l	Monthly	24-Hr. Comp.
Copper	Report	Report	lbs/day	Report	Report	mg/l	Monthly	24-Hr. Comp.
Silver	Report	Report	lbs/day	Report	Report	mg/l	Monthly	24-Hr. Comp.

T. Cyanide	Report	Report	lbs/day	Report	Report	mg/l	5 X Weekly	24-Hr. Comp.
Hex. Chromium	Report	Report	lbs/day	Report	Report	mg/l	Weekly	Grab
Naphthalene	------	Report	lbs/day	------	Report	mg/l	Monthly	Grab
Fluoride	Report	Report	lbs/day	Report	Report	mg/l	Weekly	24-Hr. Comp.
Tetrachloro-Ethylene	-------	Report	lbs/day	Report	Report	mg/l	Monthly	Grab
Total Toxic Organics	------	Report	lbs/day	Report	Report	mg/l	Monthly	24-Hr. Comp.

Table 10

	Quality or Concentration			Monitoring	Requirements
Parameter	Daily Minimum	Daily Maximum	Units	Measurement Frequency	Sample Type
pH	Report	Report	s.u.	5 X Weekly	Grab

Outfall 304

DISCHARGE LIMITATIONS[1]

Table 11

	Quantity or Loading			Quality or Concentration			Monitoring	Requirements
Parameter	Monthly Average	Daily Maximum	Units	Monthly Average	Daily Maximum	Units	Measurement Frequency	Sample Type
Flow	Report	Report	MGD	-	-	-	5 X Weekly	24 Hour Total
TSS	1,147	2,290	lbs/day	Report	Report	mg/l	5 X Weekly	24-Hr. Comp.
Oil and Grease	------	765	lbs/day	Report	Report	mg/l	5 X Weekly	3 grabs/24 Hr.
T. Chromium	10.0	30.0	lbs/day	Report	Report	mg/l	5 X Weekly	24-Hr. Comp.
Zinc	10.0	30.0	lbs/day	Report	Report	mg/l	5 X Weekly	24-Hr. Comp.
Lead	5.90	13.73	lbs/day	Report	Report	mg/l	Monthly	24-Hr. Comp.
Nickel	42.94	71.81	lbs/day	Report	Report	mg/l	Monthly	24-Hr. Comp.
Cadmium	Report	Report	lbs/day	Report	Report	mg/l	Monthly	24-Hr. Comp.
Copper	Report	Report	lbs/day	Report	Report	mg/l	Monthly	24-Hr. Comp.
Silver	Report	Report	lbs/day	Report	Report	mg/l	Monthly	24-Hr. Comp.
T. Cyanide	3.41	7.95	lbs/day	Report	Report	mg/l	5 X Weekly	24-Hr. Comp.
Hex. Chromium	0.17	0.51	lbs/day	Report	Report	mg/l	Weekly	Grab
Naphthalene	------	1.72	lbs/day	------	Report	mg/l	Monthly	Grab
Fluoride	150	400	lbs/day	Report	Report	mg/l	Weekly	24-Hr. Comp.
Tetrachloro-Ethylene	-------	2.59	lbs/day	Report	Report	mg/l	Monthly	Grab
Total Toxic Organics	------	38.43	lbs/day	Report	Report	mg/l	Monthly	24-Hr. Comp.

[1] Reported mass for each parameter is to be calculated as a sum of mass in lbs/day of both internal Outfalls 104 and 204. Compliance for 304 will be met if the sum of mass for both Outfalls 104 and 204 does not exceed the daily maximum and monthly average mass limits for 304.

Outfall 001, 102, and 103

DISCHARGE LIMITATIONS

Table 12

Parameter	Quantity or Loading Monthly Average	Daily Maximum	Units	Quality or Concentration Monthly Average	Daily Maximum	Units	Monitoring Measurement Frequency	Requirements Sample Type
Flow	Report	Report	MGD	------	-----	-----	Quarterly	24 Hour Total
TSS	------	------	------	------	Report	mg/l	Quarterly	Grab
COD	------	------	------	------	Report	mg/l	Quarterly	Grab
Oil and Grease	------	------	------	------	Report	mg/l	Quarterly	Grab
Ammonia	------	------	------	------	Report	mg/l	Quarterly	Grab
Zinc	------	------	------	------	Report	mg/l	Quarterly	Grab
pH	------	------	------	------	Report	s.u.	Quarterly	Grab

5.2 Technology-Based Effluent Limits

The wastewater comprising Outfall 304 is regulated under the federal effluent limitations guidelines of 40 CFR 420 – Iron and Steel Manufacturing Point Source Category. The permittee's April 2009 NPDES updated application identified the following operations as contributing wastewaters to the effluent discharged:

1 acid pickling line
2 cold reduction mills
1 annealing line
1 sheet temper mill
2 cleaning lines
2 tin temper mills
Greenbelt II landfill leachate
2 preparation lines
2 electroplating lines
2 hot-dip coating lines
3 shear lines
galvanizing
1 double cold reduction mill

The following average daily production rates are used in the calculation of technology-based effluent limitations for this facility:

Acid Pickling (removal of scale and/or oxide from steel surfaces using strong acid solutions):

- Hydrochloric (with 1 fume scrubber) 9,688 (1,000 lbs/day)

Cold Forming (operation in which shape of metal is changed by plastic deformation at a temperature below that at which recrystallization occurs):

- Recirculating Temper Mills 4,082 (1,000 lbs/day)
- Direct Application Temper Mills 2,455 (1,000 lbs/day)
- Combination Cold Mills 10,193 (1,000 lbs/day)

Alkaline Cleaning (application of solutions containing caustic soda, soda ash, alkaline silicates, or alkaline phosphates to a metal surface to remove mineral deposits, animal fats and oils):

- Continuous 3,962 (1,000 lbs/day)
- Continuous (new source) 474 (1,000 lbs/day)
- Batch (Annealing only) 3,865 (1,000 lbs/day)

Hot Coating (operations in which precleaned steel is immersed into molten metal bath to improve resistance to corrosion, or, to improve appearance and paintability):

- Galvanizing (with 1 fume scrubber) 3,057 (1,000 lbs/day)
- Galvanizing (new source with 1 fume scrubber) 1,375 (1,000 lbs/day)

Production rates for the tin and chromium electroplating operations are based on process wastewater flow rates subject to regulation under 40 CFR 433.

Appendixes B, C, and D contain the tabulated ELGs from the federal regulations and the calculated permit limits for Outfall 304.

5.3 Water Quality-Based Effluent Limits

The need for WQBELs was determined using the Great Lakes system reasonable potential procedure contained in 327 IAC 5-2-11.5. Water quality-based effluent limitations were calculated using the surface water quality criteria for the Great Lakes system contained in 327 IAC 2-1.5 and the following implementation procedures for the Great Lakes system: the wasteload allocation procedure contained in 327 IAC 5-2-11.4 and the procedure for calculating WQBELs from wasteload allocations contained in 327 IAC 5-2-11.6.

See Appendix E for the reasonable potential statistical analysis using effluent monitoring data and the derivation of the water quality-based effluent limits from the wasteload allocations.

In addition to establishing WQBELs based on the reasonable potential statistical procedure contained in 327 IAC 5-2-11.5(b), IDEM is also required to establish WQBELs under 327 IAC 5-2-11.5(a) "If the commissioner determines that a pollutant or pollutant parameter (either conventional, nonconventional, a toxic substance, or whole effluent toxicity (WET)) is or may be discharged into the Great Lakes system at a level that will cause, have the reasonable potential to cause, or contribute to an excursion above any applicable narrative criterion or numeric water quality criterion or value under 327 IAC 2-1.5."

For each pollutant receiving TBELs at an internal outfall, and for which water quality criteria or values exist or can be developed, concentration and corresponding mass-based WQBELs were calculated at the final outfall. This was done for cadmium, hexavalent chromium, total chromium, copper, lead, nickel, silver, zinc, total cyanide, naphthalene and tetrachloroethylene at Outfall 004. The mass-based WQBELs at the final outfall were compared to the mass-based TBELs at the internal outfall. Since the facility is authorized to discharge up to the mass-based TBELs, if the mass-based TBELs at the internal outfall exceed the mass-based WQBELs at the final outfall, the pollutant may be discharged at a level that will cause an excursion above a numeric water quality criterion or value under 327 IAC 2-1.5 and WQBELs are required for the pollutant at the final outfall. This was the case for cadmium, copper and silver. Therefore, WQBELs are required for cadmium, copper and silver regardless of the results of the reasonable potential statistical procedure. However, the results of the reasonable potential statistical procedure were used to help establish the monitoring frequency.

5.4 Original Permit Limits

Outfalls 001, 002, 003, and 005*

DISCHARGE LIMITATIONS

Table 1

Parameter	Quantity or Loading Monthly Average	Daily Maximum	Units	Quality or Concentration Monthly Average	Daily Maximum	Units	Monitoring Measurement Frequency	Requirements Sample Type
Flow	Report	Report	MGD	-	-	-	Weekly	Estimate
Oil and Grease	------	------	-----	Report	Report	mg/l	Weekly	Grab
Total Residual Chlorine	------	------	------	0.02	0.04	mg/l	Weekly	Grab
Total Residual Oxidants	------	------	------	------	0.05	mg/l	Weekly	Grab

Outfall 004

DISCHARGE LIMITATIONS

Table 2

Parameter	Quantity or Loading Monthly Average	Daily Maximum	Units	Quality or Concentration Monthly Average	Daily Maximum	Units	Monitoring Measurement Frequency	Requirements Sample Type
Flow	Report	Report	MGD	-	-	-	5 X Weekly	Estimate
Oil and Grease	------	------	-----	Report	Report	mg/l	5 X Weekly	Grab
TSS	Report	Report	lbs/day	Report	Report	mg/l	Weekly	24-Hr. Comp.
BOD_5	Report	Report	lbs/day	Report	Report	mg/l	2 X Monthly	24-Hr. Comp.

Outfall 104

DISCHARGE LIMITATIONS

Table 3

Parameter	Quantity or Loading Monthly Average	Daily Maximum	Units	Quality or Concentration Monthly Average	Daily Maximum	Units	Monitoring Measurement Frequency	Requirements Sample Type
Flow	Report	Report	MGD	------	------	------	5 X Weekly	24-Hr. Total
TSS	1,147	2,290	lbs/day	------	------	------	Weekly	24-Hr. Comp.
Oil and Grease	------	765	lbs/day	------	------	------	5 X Weekly	3 Grabs/24 Hr.
Total Iron	38	138	lbs/day	Report	Report	mg/l	5 X Weekly	24-Hr. Comp.
Total Chromium	10.0	30.0	lbs/day	Report	Report	mg/l	5 X Weekly	24-Hr. Comp.
Total Zinc	10.0	30.0	lbs/day	Report	Report	mg/l	5 X Weekly	24-Hr. Comp.
Total Lead	5.90	13.73	lbs/day	Report	Report	mg/l	5 X Weekly	24-Hr. Comp.
Total Cyanide	3.41	7.95	lbs/day	Report	Report	mg/l	Quarterly	24-Hr. Comp.
Sulfate	28,300	60,000	lbs/day	Report	Report	mg/l	5 X Monthly	24-Hr. Comp.
Chloride	Report	Report	lbs/day	Report	Report	mg/l	Weekly	24-Hr. Comp.
Fluoride	150	400	lbs/day	Report	Report	mg/l	Weekly	24-Hr. Comp.

Hex. Chromium	1.07	2.31	lbs/day	Report	Report	mg/l	Weekly	Grab
BOD_5	Report	Report	lbs/day	Report	Report	mg/l	Weekly	24-Hr. Comp.
Naphthalene	------	3.70	lbs/day	------	Report	mg/l	Quarterly	Grab
TCE	------	5.98	lbs/day	------	Report	mg/l	Quarterly	Grab
Total Residual Chlorine	Report	Report	------	Report	Report	mg/l	2 X Monthly	Grab

Outfall 006*

DISCHARGE LIMITATIONS

Table 4

	Quantity or Loading			Quality or Concentration			Monitoring	Requirements
Parameter	Monthly Average	Daily Maximum	Units	Monthly Average	Daily Maximum	Units	Measurement Frequency	Sample Type
Flow	Report	Report	MGD	------	------	------	3 X Weekly	24-Hr. Total
BOD_5	40	60	lbs/day	10	15	mg/l	2 X Weekly	24-Hr. Comp.
TSS	40	60	lbs/day	10	15	mg/l	2 X Weekly	24-Hr. Comp.
Fecal Coliform	------	------	------	200	400	count/100 ml	Weekly	Grab
Total Residual Chlorine	------	------	------	------	0.05	mg/l	Weekly	Grab

* Outfalls 005 and 006 are no longer active

5.5 Biomonitoring Requirements

Indiana's regulations for the Great Lakes system include narrative criteria with numeric interpretations for acute (2-1.5-8(b)(1)(E)(ii)) and chronic (2-1.5-8(b)(2)(A)(iv)) whole effluent toxicity (WET) and a procedure for conducting reasonable potential for WET (5-2-11.5(c)(1)). The U.S. EPA did not approve the reasonable potential procedure for WET so Indiana is now required under 40 CFR Part 132.6(c) to use the reasonable potential procedure in Paragraphs C.1 and D of Procedure 6 in Appendix F of 40 CFR Part 132. IDEM used this procedure in conducting the reasonable potential analysis for WET. The analysis is included in the wasteload allocation report in Appendix E. The results of the reasonable potential analysis for WET show that the discharge from Outfall 004 has a reasonable potential to exceed the numeric interpretation of the narrative criterion for chronic WET. Therefore, WQBELs are required for WET.

Once a determination is made that WQBELs are required for WET, the WQBELs are established in accordance with 327 IAC 5-2-11.6(d). This provision allows a case-by-case determination of whether to establish a WQBEL for only acute or chronic WET, or WQBELs for both acute and chronic WET, the number of species required for testing and the particular species required for testing. No acute toxicity has been demonstrated so it was decided to establish a WQBEL for only chronic WET at Outfall 004. Chronic toxicity has been demonstrated for both *Ceriodaphnia dubia* and Fathead Minnow so testing is required for both of these species. The WQBEL was established as a monthly average limit and set equal to the chronic wasteload allocation in accordance with 327 5-2-11.6(d)(1)(E). The monthly average WQBEL for WET is 1.5 chronic toxicity units (TUc) and chronic WET testing is required once every three months at Outfall 004 for the term of this permit.

5.6 Antidegradation

According to 327 IAC 5-2-11.7(a)(2), for a new or increased discharge of a pollutant or pollutant parameter from a new or existing Great Lakes discharger into a tributary of an OSRW for which a new or increased permit limit would be required, the following apply:

(1) 5-2-11.3(a) and 5-2-11.3(b) apply to the new or increased discharge; and
(2) the discharge shall not cause a significant lowering of water quality in the OSRW.

According to nonrule policy document Water-002-NPD, "Antidegradation Requirements for Outstanding State Resource Waters Inside the Great Lakes Basin," a new or increased discharge into a tributary of Lake Michigan will not cause a significant lowering of water quality in Lake Michigan if any of the following are met:

(1) The new or increased discharge into a tributary of Lake Michigan is the result of an activity that will result in a significant overall environmental benefit to Lake Michigan.

(2) The new or increased discharge into a tributary of Lake Michigan does not cause a significant lowering of water quality in the tributary, as determined under 327 IAC 5-2-11.3(b)(1)(A) or 327 IAC 5-2-11.3(b)(1)(B).

(3) For non-bioaccumulative chemicals of concern, the new or increased discharge into a tributary of Lake Michigan uses less than 10% of the unused loading capacity of Lake Michigan. For the purposes of this provision:

   (A) "Unused loading capacity" means that amount of the total loading capacity not utilized by point source and nonpoint source discharges.
   (B) "Total loading capacity" means the product of the applicable water quality criterion times the sum of the following:
      (i) The flow in the tributary at the point it enters into Lake Michigan; and
      (ii) An equal volume of Lake Michigan water.
   (C) The unused loading capacity and total loading capacity will be established at the time that the request to lower the water quality is proposed. The stream flows used in the calculations will be the applicable stream design flows for the particular criteria.

New mass limits for total residual chlorine were calculated for Outfalls 002, 003 and 004. New mass and concentration limits for free cyanide were also calculated for Outfall 004. As shown in the wasteload allocation report in Appendix E, the new limits for total residual chlorine and free cyanide do not cause a significant lowering of water quality for total residual chlorine or free cyanide in Portage-Burns Waterway under 5-2-11.3(b)(1)(B). Therefore, condition (2) is met and the new limits for total residual chlorine and free cyanide do not cause a significant lowering of water quality in Lake Michigan.

New mass-based TBELs for cadmium, copper, nickel, silver and total toxic organics were calculated because the regulation of these parameters is required under the federal effluent guidelines of 40 CFR 433. These guidelines were promulgated July 15, 1983 and were first applied to this facility in a permit renewal issued October 11, 1983. The permit renewal included limits for all the parameters included in the guideline except cadmium, copper, nickel, silver and total toxic organics. IDEM cannot find any rationale in the Fact Sheets of any previous permits for excluding these parameters. The TBELs under 40 CFR 433 are calculated based on the discharge flow volume. According to the Fact Sheet of the 1983 permit renewal, the flow volume

that was used in the first application of the guideline to this facility was 2.162 mgd. The flow used to calculate TBELs in the current permit renewal is 2.3 mgd. To satisfy antidegradation requirements, IDEM also calculated TBELs for cadmium, copper, nickel, silver and total toxic organics based on the original flow volume. TBELs based on the original flow volume are being included in the permit renewal as the new TBELs for internal Outfall 304.

IDEM believes that the new limits for cadmium, copper, nickel, silver and total toxic organics are authorized under the previous permit and are therefore authorized under the renewal permit and antidegradation does not apply. Nonetheless, under 5-2-11.3(b)(1)(C)(ii), the following does not constitute a significant lowering of water quality.

New limits for an existing permitted discharger that are not a result of changes in pollutant loading, and will not allow an increase in pollutant loading, including new limits that are a result of the following:

(AA) New or improved monitoring data.

(BB) New or improved analytical methods.

(CC) New or modified water quality criteria or values.

(DD) New or modified effluent limitations guidelines, pretreatment standards, or control requirements for POTWs.

The new limits for cadmium, copper, nickel, silver and total toxic organics are not a result of changes in pollutant loading and will not allow an increase in pollutant loading since they are authorized under the previous permit. They fall under the provision in (DD) since they are a new application of effluent limitations guidelines. Therefore, the new limits do not cause a significant lowering of water quality in Portage-Burns Waterway. According to 5-2-11.7(a)(2)(C)(i), the requirements of 5-2-11.7(a)(2) will be considered to have been met when one or more of the items listed in 5-2-11.3(b)(1)(C)(ii) apply. Therefore, the new limits for cadmium, copper, nickel, silver and total toxic organics do not cause a significant lowering of water quality in Lake Michigan.

EPA has provided additional guidance to the State on determining the need for water quality based effluent limits at the final outfall using TBELs determined appropriate at an internal outfall. If the TBELs calculated mass exceed the water quality based effluent limits mass then there is a reasonable potential to exceed a water quality criterion and water quality based effluent limits are required at the final outfall. This has occurred for cadmium, copper and silver at Outfall 004. A similar antidegradation rationale applies to these new limits as applied to the new limits for internal Outfall 304. Since the new WQBELs for cadmium, copper and silver are required as a result of the new internal TBELs, they are not a result of changes in pollutant loading and since they are more stringent than the internal TBELs, they will not allow an increase in pollutant loading. The new limits fall under the provision in 5-2-11.3(b)(1)(C)(ii)(DD) since they are the result of a new application of effluent limitations guidelines for internal Outfall 304. Therefore, the new limits do not cause a significant lowering of water quality in Portage-Burns Waterway. According to 5-2-11.7(a)(2)(C)(i), the requirements of 5-2-11.7(a)(2) will be considered to have been met when one or more of the items listed in 5-2-11.3(b)(1)(C)(ii) apply. Therefore, the new limits for cadmium, copper, and silver at Outfall 004 do not cause a significant lowering of water quality in Lake Michigan.

5.7 Stormwater Requirements

The renewal permit includes storm water monitoring requirements at Outfall Outfalls 001, 102, and 103. Outfalls 102 and 103 have been added to the permit to represent internal outfalls of Outfalls 002 and 003 respectively. The incorporation of Outfalls 102 and 103 is necessary to ensure monitoring of storm water prior to mixing with the wastestreams discharging at Outfalls 002 and 003. Monitoring requirements for flow, TSS, COD, oil and grease and pH have been included at Outfall 001 for storm water discharges exposed to industrial activity. Monitoring requirements for zinc have been included at Outfall 001 based on the monitoring requirements for primary metals facilities (applicable to SIC 3312-3317) in U.S.EPA's 2008 multi sector general permit.

In addition to the monitoring requirements included at Outfall 001, the permittee will have 12 months from the effective date of the permit to develop and implement the stormwater permit conditions in Part I.D. and the Storm Water Pollution Prevention Plan (SWP3) in Part I.E. for the permitted facility.

EPA has determined that non-numeric Technology-Based Effluent Limits are equal to BPT/BAT/BCT for Stormwater associated with industrial activity.

The Non-Numeric Stormwater Conditions and Effluent Limits contain the technology-based effluent limitations. Effective implementation of these requirements should meet the applicable water quality based effluent limitations.

The non-numeric requirements of the permit contain effluent limitations, defined in the CWA as restrictions on quantities, rates, and concentrations of constituents which are discharged. Violation of any of these effluent limitations constitutes a violation of the permit.

The technology-based effluent limitations require the permittee to minimize exposure of raw, final, or waste materials to rain, snow, snowmelt, and runoff. In doing so, the permittee is required, to the extent technologically available and economically practicable and achievable, to either locate industrial materials and activities inside or to protect them with storm resistant coverings. In addition, it is required to: (1) use good housekeeping practices to keep exposed areas clean, (2) regularly inspect, test, maintain and repair all industrial equipment and systems to avoid situations that may result in leaks, spills, and other releases of pollutants in stormwater discharges, (3) minimize the potential for leaks, spills and other releases that may be exposed to stormwater and develop plans for effective response to such spills if or when they occur, (4) stabilize exposed area and contain runoff using structural and/or non-structural control measures to minimize onsite erosion and sedimentation, and the resulting discharge of pollutants, (5) divert, infiltrate, reuse, contain or otherwise reduce stormwater runoff, to minimize pollutants in your discharges, (6) enclose or cover storage piles of salt or piles containing salt used for deicing or other commercial or industrial purposes, including maintenance of paved surfaces, (7) train all employees who work in areas where industrial materials or activities are exposed to stormwater, or who are responsible for implementing activities necessary to meet the conditions of this permit (e.g., inspectors, maintenance personnel), including all members of your Pollution Prevention Team, (8) ensure that waste, garbage and floatable debris are not discharged to receiving waters by keeping exposed areas free of such materials or by intercepting them before they are discharged, and (9) minimize generation of dust and off-site tracking of raw, final or waste materials.

To meet the non-numeric effluent limitations in Part I.D.3, the permit requires the U.S. Steel Corporation, Midwest Plant, to select control measures (including best management practices) to address the selection and design considerations in Part I.D.4.

The permittee must control its discharge as necessary to meet applicable water quality standards. It is expected that compliance with the technology-based effluent limitations and other terms and conditions in this permit will meet this effluent limitation. However, if at any time the permittee, or IDEM, determines that the discharge causes or contributes to an exceedance of applicable water quality standards, the permittee must take corrective actions, and conduct follow-up monitoring.

Part D.5 of the permit requires an annual review of the selection, design, installation, and implementation of the control measures to determine if modifications are necessary to meet the effluent limitations in the permit. This annual review will reinforce the continuous improvement of stormwater discharges.

"Term and Condition" to Provide Information in a SWPPP

Distinct from the effluent limitation provisions in the permit, the permit requires the discharger to prepare a Stormwater Pollution Prevention Plan (SWPPP) for its facility. The SWPPP is intended to document the selection, design, installation, and implementation (including inspection, maintenance, monitoring, and corrective action) of control measures being used to comply with the effluent limits set forth in Part I.E. of the permit. In general, the SWPPP must be kept up-to-date, and modified whenever necessary to reflect any changes in control measures that were found to be necessary to meet the effluent limitations in this permit.

The requirement to prepare a SWPPP is not an effluent limitation, rather it documents what practices the discharger is implementing to meet the effluent limitations in Part I.D. of the permit. The SWPPP is not an effluent limitation because it does not restrict quantities, rates, and concentrations of constituents which are discharged. Instead, the requirement to develop a SWPPP is a permit "term or condition" authorized under sections 402(a)(2) and 308 of the Act. Section 402(a)(2) states, "[t]he Administrator shall prescribe conditions for [NPDES] permits to assure compliance with the requirements of paragraph (1) of this subsection, including conditions on data and information collection, reporting, and such other requirements as he deems appropriate." The SWPPP requirements set forth in this permit are terms or conditions under the CWA because the discharger is documenting information on how it intends to comply with the effluent limitations (and inspection and evaluation requirements) contained elsewhere in the permit. Thus, the requirement to develop a SWPPP and keep it updated is no different than other information collection conditions, as authorized by section 402(a)(2), in other permits.

Public availability of documents

Part I.E.2.d(2) of the permit requires that the permittee retain a copy of the current SWPPP at the facility and it must be immediately available, at the time of an onsite inspection or upon request, to IDEM. Additionally, interested persons can request a copy of the SWPPP through IDEM. By requiring members of the public to request a copy of the SWPPP through IDEM, the Agency is able to provide the permittees with assurance that any Confidential Business Information contained within its SWPPP is not released to the public.

5.8 Water Treatment Additives

The following water treatment additives have been approved for use in the NPDES permit:

OUTFALL 002

BL-126 (Sodium Bisulfite)	NaOCl (Sodium Hypochlorite)

OUTFALL 003

BL-126 (Sodium Bisulfite)	NaOCl (Sodium Hypochlorite)

OUTFALL 004

BL-126 (Sodium Bisulfite)	NaOCl (Sodium Hypochlorite)
P-8905L (Aluminum Coagulant)	P-899L (Aluminum Coagulant)
P-841L (Tannin Coagulant)	P-891L (Aluminum Coagulant)
P-895L (Starch Coagulant)	P-813E (Anionic Polymer)
P-817E (Anionic Polymer)	F-31 (Magnesium Hydroxide)
FO-120 (Antifoam)	CL-2840 (Nitrate-based Corrosion Inhibitor)
CL-2875 (Molybdate-based Inhibitor)	CL-2865 (Oil Filming Corrosion Inhibitor)
BL-1307	CL-240
CL-4442	Nalco 71325
Nalco DT9472	

The approval of these additives is based on the fact that the calculated discharge concentrations of each product is below the Tier II aquatic life value as determined under 327 IAC 2-1.5-12.

In the event that changes are to be made in the use of water treatment additives (including dosage rates) contributing to the outfall regulated under the NPDES permit, the permittee shall notify the Indiana Department of Environmental Management as required in Part II.C.1 of the permit. The use of any new or changed water treatment additives or dosage rates shall not cause the discharge from any permitted outfall to exhibit chronic or acute toxicity. Acute and chronic aquatic toxicity information must be provided with any notification regarding any new or changed water treatment additives or dosage rates.

5.9 316(b) Requirements

Section 316(b) of the Clean Water Act requires that facilities minimize adverse environmental impact resulting from the operation of cooling water intake structures (CWIS) by using the "best technology available" (BTA). U.S. EPA has promulgated rules to implement these requirements for new facilities (Phase I rules), large, existing power plants (Phase II rules), and offshore oil and gas extraction facilities (Phase III rules), and that implementation must take place through the issuance of NPDES permits. However, there is a large universe of facilities which are not specifically addressed by the rules, including:

- New facilities with a CWIS design flow less than 2 MGD;
- Existing power plants with a CWIS design flow less than 50 MGD;

- Manufacturing facilities such as existing steel mills, paper mills, etc. with a surface water intake that use at least a portion of their intake flow for cooling purposes.

U.S. EPA has recently emphasized that all of these facilities, including those not specifically addressed by rules must be evaluated for 316(b) compliance. 40 C.F.R. §125.90(b) directs permitting authorities to establish 316(b) requirements on a best professional judgment (BPJ) basis for existing facilities not subject to categorical section 316(b) regulations (Phase I, II (currently remanded) or III rules. IDEM is required to make a BTA determination using BPJ so the permit will comply with the federal regulation.

In response to a Request for Additional Information Pursuant to the Clean Water Act 316(b) from IDEM, the United States Steel Corporation submitted information and technical data on the cooling water intake structure at the Midwest Plant, dated November the 7th, 2008. An evaluation of the information and data has been performed, and it has been determined that this technology currently represents the best technology available to minimize adverse environmental impact in accordance with Section 316(b) of the federal Clean Water Act (33 U.S.C. section 1326). A summary entailing the submitted information and rationale for this determination follows.

The Midwest intake is designed with a closed intake conduit to withdraw water from Lake Michigan via four intake openings (diameter is approximately 8 feet 8 inches each), which are capped with bars spaced approximately 7 inches apart in a grid pattern. The four intake openings are located approximately 2,800 feet off-shore of the Midwest facility in the Southern Lake Michigan Basin. An 84-inch diameter pipe transports water from the openings in Lake Michigan to Pump Station #1. Pump Station #1 includes two forebays equipped with one vertical screen of 1/4th inch mesh each; four vertical Fairbanks – Morse Deep Well Turbine pumps with a maximum capacity of approximately 17.2 MGD each; and a distribution manifold to deliver cooling water to all plant areas. From November of 2007, through October 2008, intake volumes for Pump Station #1 averaged approximately 36.4 MGD with three pumps typically running at one time. Current maintenance includes annual inspection by divers for integrity and condition status of the intake system and normal preventative maintenance inspections of mechanical pump and water distribution components.

Based upon this information and documentation provided to IDEM, IDEM has evaluated the information and has made a BTA determination on the information submitted.

I. The magnitude of the calculated velocities at the mouth of the intake structures in Lake Michigan is equal to or less than a flow velocity of 0.5 ft/s that is believed to impair fish swimming ability.

II. A permit condition has been included to determine adequate fish return of species to demonstrate minimize fish mortality.

III. The off shore location of the cooling water intake structure is located such that entrainment is minimized.

Any additional Studies and/or additional information shall be submitted prior to or with the permit renewal.

5.10 Reporting Requirements for Solvents, Degreasing Agents, Rolling Oils, Water Treatment Chemicals and Biocides

Annually, US Steel Midwest Plant will report as part of the fourth monthly Discharge Monitoring Report of the following year, the total quantity (lbs/yr) of each solvent, degreasing agent, water treatment chemical, rolling oil and biocide that was purchased for that year and which can be present in any outfall regulated by this permit. This reporting requirement includes all surfactants, anionic, cationic and non-ionic, which may be used in part or wholly as a constituent in these compounds.

US Steel Midwest Plant will maintain these files for a period of ten years. Files will include the Material Safety Data Sheet, FIFRA Label for each biocide, chemical name and CAS Number for each compound used. If these compounds contain proprietary material, US Steel Midwest Plant may maintain this information in a separate file that can be accessed by U.S. EPA or IDEM personnel with appropriate authority.6.0 Permit Draft Discussion

6.1 Wastewater Discharge Limitations

The effluent limitations contained in the NPDES permit are based on the more stringent of the technology-based effluent limitations required under 327 IAC 5-5-2, and the water quality-based effluent limitations (WQBELs) developed under the provisions of 327 IAC 2-1.5 and 327 IAC 5-2-11.6. Technology-based effluent limitations are applied to the treated process wastewater at a point prior to mixing with any other wastestreams, while WQBELs are applied at the point where the effluent discharges to a water of the state. In addition to consideration of technology-based and water quality-based effluent limitations, the antibacksliding provisions of 327 IAC 5-2-10(11) require that limitations from the previous permit be retained whenever they are more stringent than current technology or water quality-based limits, unless meeting one of the exceptions under 327 IAC 5-2-10(11)(B). This permit has maintained the same mass limits for TSS, Oil and Grease, T. Chrome, T. Zinc, Fluoride, T.Cyanide and T.Lead for the two previous permit cycles. The previous permit carried those limits through for both antidegradation and water quality issues. The permittee was meeting the limits and continues to do so regardless in the changes in production presented in the renewal applications. The anti-backsliding policy section 402(o)(1) prohibits the relaxation of limits established on the basis of BPJ limits – to reflect subsequently promulgated less stringent guidelines.

The following is an outfall-by-outfall summary of the wastewater discharged under the NPDES permit, and the applicable effluent limitations rationale:

<u>Outfalls 104, 204, and 304</u>

U.S. Steel Corporation Midwest Plant has submitted plans to construct a new chrome treatment plant to reduce total chromium loading to Burns Waterway from Outfall 004. The new chrome treatment plant will treat hexavalent chrome wastewaters from the Tin Free Steel (TFS), Electrolytic Tinning Lines (ETL), and Galvanizing Lines via a reduction process (i.e., chrome removal) using sodium bisulfite, sulfuric acid, and sodium hydroxide. The new chrome treatment plant will also treat leachate from the Greenbelt II landfill and have dedicated sludge management equipment. United States Steel Corporation anticipates that the new chrome treatment plant will be operational during the renewed permit's lifecycle. The existing chrome treatment plant discharges to Burns Waterway via Outfall 004 through Internal Outfall 104. Effluent from the new chrome treatment plant will be discharged to Burns Waterway via Outfall 004. The operation and effectiveness of the new chrome treatment plant is projected to reduce total chromium loading to Burns Waterway. The estimated maximum daily flow for Outfall 204 is 1.44 MGD.

Citing the fact that Internal Outfall 204 will be further treatment of the same effluent for Internal Outfall 104, monitoring for the same parameters under the Federal Effluent Guidelines (FEGs) of 40 CFR 420 - Iron and Steel Manufacturing Point Source Category, Subparts I (Acid Pickling), J (Cold Forming), K (Alkaline Cleaning), and L (Hot Coating), and 40 CFR 433 - Metal Finishing Category, has been included. Limits for the combined effluent from Internal Outfalls 104 and 204 will be covered under the same FEGs calculated for 104, by applying the 104 limits to Compliance Point 304.

Outfall 304 (compliance point)

The wastewater covered under compliance point 304 is subject to the Federal Effluent Guidelines of 40 CFR 420 - Iron and Steel Manufacturing Point Source Category, Subparts I (Acid Pickling), J (Cold Forming), K (Alkaline Cleaning), and L (Hot Coating). A portion of the wastewaters is also subject to 40 CFR 433 - Metal Finishing Category. The technology-based effluent limitations from the Federal Effluent Guidelines represent the minimum level of control (treatment) required under 327 IAC 5-5. The limits derived from 40 CFR 420 are calculated based on production values for applicable operations. The limits derived from 40 CFR 433 are based on flow volumes of applicable operations.

The following parameters (with applicable guidelines) are regulated for Outfall 304:

TSS (40 CFR 420, Subparts I, J, K, L; 40 CFR 433)
Oil & Grease (40 CFR 420, Subparts I, J, K, L; 40 CFR 433)
pH (40 CFR 420, Subparts I, J, K, L; 40 CFR 433)
Total Lead (40 CFR 420, Subparts I, J, L; 40 CFR 433)
Total Zinc (40 CFR 420, Subparts I, J, L; 40 CFR 433)
Total Chromium (40 CFR 433)
Total Nickel (40 CFR 433)
Total Copper (40 CFR 433)
Total Cadmium (40 CFR 433)
Total Silver (40 CFR 433)
Total Cyanide (40 CFR 433)
Naphthalene (40 CFR 420, Subpart J)
Tetrachloroethylene (40 CFR 420, Subpart J)
Hexavalent Chromium (40 CFR 420, Subpart L)
Total Toxic Organics (40 CFR 433)
pH (40 CFR 420, 40 CFR 433)

Flow

The effluent flow from Outfall 104 is to be monitored in accordance with 327 IAC 5-2-13(a)(2). Flow measurement is to be reported five times weekly.

pH

The effluent limitation for pH (within 6.0 to 9.0 s.u.) are being assessed at final Outfall 004. Therefore, internal limitations for pH are not being continued but reporting of pH are being retained. Since 104 and 204 represent two separate treatment systems pH is reported there individually and not at the compliance outfall 304. pH is to be measured five times weekly by a grab sample.

TSS, Oil and Grease, Hex. Chromium, Zinc, T. Chromium, T. Cyanide, Fluoride, and Lead

The effluent limitations for the referenced parameters originally for Outfall 104 from the previous permit have been retained to apply to Outfall 304. Pursuant to the federal antibacksliding provisions, the limits for these parameters cannot be relaxed to the quantities calculated from current production levels/volumes under 40 CFR 420 and 40 CFR 433 (See Part 6.5 of Fact Sheet). Assuming antibacksliding concerns are addressed, any increases in the loadings at the internal outfalls that do not include any additional treatment prior to discharge through the final outfall have to meet all antidegradation considerations.

TSS, oil and grease, total chromium, total cyanide, and zinc are to be measured five times weekly. Hexavalent chromium, and fluoride are to be measured one time weekly. Lead is to be measured monthly. Monitoring frequencies have been established taking into consideration the monitoring frequencies from the previous permit, all available effluent data, and the discharge volumes reported at Outfall 104. The required sample type for all parameters at Outfall 304, other than oil and grease and hexavalent chromium, is a 24 hour composite sample. The required sample type for hexavalent chromium is a grab sample, while oil and grease is to be measured by a minimum of three (3) grab samples collected at equally spaced time intervals for the duration of the discharge within a twenty-four (24) hour period.

Naphthalene and Tetrachloroethylene

Effluent limitations for naphthalene and tetrachloroethylene are included at Outfall 304 because the regulation of these parameters is required under the federal effluent guidelines of 40 CFR 420. The limits are based on current production levels regulated under the federal guidelines. Both parameters are to be measured monthly by a grab sample.

Cadmium, Copper, Nickel, Silver, and Total Toxic Organics

Monitoring requirements for cadmium, copper, silver, and effluent limitations for nickel, total toxic organics were not previously in the permit and have been added to Outfall 304, because the regulation of these parameters is required under the applicable federal effluent guidelines of 40 CFR 420 and 40 CFR 433. The effluent limitations were calculated based on current production rates (40 CFR 420). To satisfy antidegradation requirements, IDEM calculated TBELs for nickel and total toxic organics based on the original flow volume for Outfall 104 of 2.162 MGD. Cadmium, copper, nickel, silver and total toxic organics are to be measured monthly by a 24 hour composite sample. The permittee may submit the certification statement for TTO in Part I.A.4., footnote [6] in lieu of the monitoring requirements through the submission of the TTO Management Plan outlined in Part I.H. of the permit.

BOD_5, Chloride, Sulfate, Total Residual Chlorine And Total Iron

Monitoring requirements and effluent limitations originally for 104 have not been retained at Outfall 304 for BOD_5, chloride, sulfate, total residual chlorine and total iron. None of these parameters are regulated by applicable Federal Effluent Guidelines and are not necessarily reflective of the minimum level of treatment required of the WWTP by state and federal regulations. These parameters are only a concern when applying water quality standards at the point of discharge to a water of the state (See Outfall 004).

Appendices B, C, and D include the production/flow values for applicable operations, the multiplication factors from applicable Federal Effluent Guidelines, and the resulting technology-based effluent limitations applied at Outfall 304. As these limits are less stringent than those contained in the previous permit, the limits from the previous permit have been retained in the renewal permit in accordance with the antibacksliding provisions of 40 CFR 122.44(l)(1) and (2).

Outfalls 104 and 204

Limits originally calculated for Internal Outfall 104 have been applied to Outfall 304 (compliance point). However, only monitoring for the same parameters for 104 will remain so that the combined mass for those parameters and the parameters for 204 will be limited under the same compliance point 304, citing the fact that wastewater treatment processes at Outfall 204 are further treating the effluent for 104 as opposed to being an additional wastewater source for Outfall 004.

Outfall 002

Outfall 002 represents the discharge of non-contact cooling water. Although storm water is discharged at the same location, its discharge is designated as Outfall 102 in order to facilitate the monitoring of storm water separately. Sampling of all parameters at Outfall 002 is to be conducted during dry weather conditions to ensure the samples are representative of the volume and nature of the discharge of non-contact cooling water.

Flow

The effluent flow from Outfall 002 is to be monitored in accordance with 327 IAC 5-2-13(a)(2). Flow measurement is to be reported weekly.

pH

Effluent limitations for pH have been retained from the previous permit and are consistent with the minimum water quality criteria of 327 IAC 2-1.5-8(c)(2). The pH of the effluent is to be within a range of 6.0 to 9.0 standard units. pH is to be measured weekly by a grab sample.

Oil and Grease

Monitoring requirements for oil and grease have been included in the renewal permit at Outfall 002. Discharges to a surface water shall not contain oil or other substances in amounts sufficient to create a visible film or sheen on the receiving water. It is not expected that the discharge will contain oil and grease. If oil and grease is detected, it could be a sign of improper operation and maintenance of the system. Therefore, if oil and grease is measured in the effluent in significant quantities, above 5 mg/l, the source of such discharge is to be investigated and eliminated, if feasible. Oil and grease is to be measured weekly by a grab sample.

Total Residual Chlorine

Due to the fact that the permitted facility seasonally adds chlorine to the intake water (for zebra mussel control) that ultimately discharges at Outfall 002, monitoring requirements and effluent limitations for total residual chlorine have been retained in the renewal permit. Monitoring is required on a daily basis when the facility is chlorinating and for an additional three days after chlorination has ceased. The effluent limitations are developed in accordance with the water quality-based requirements specific to GLI dischargers in 327 IAC 5-2-11.6. Considering the close proximity of the points of discharge from the three outfalls, the flows from each were combined in the calculation of WQBELs for total residual chlorine.

The effluent limitations of 0.01 mg/l as a monthly average and 0.02 mg/l as a daily maximum are water quality-based, and are below the limit of quantitation (LOQ) of 0.06 mg/l. In accordance with 327 IAC 5-2-11.6(h)(3), compliance with the daily maximum limit will be demonstrated when effluent concentrations for total residual chlorine are less than the LOQ. The permittee must comply with the monthly average limit, but may consider daily values that are less than the LOQ to be zero for purposes of calculating a monthly average value.

In accordance with 327 IAC 5-2-11.6(g)(1), mass limits and a mass-based compliance value for total residual chlorine are included in the renewal permit at Outfall 002, based on a flow volume of 7.08 MGD. Monitoring of total residual chlorine is to be conducted daily by a grab sample.

Total Residual Oxidants

Monitoring requirements and effluent limitations for total residual oxidants have not been retained in the renewal permit as bromine-based water treatment additives are no longer in use at the permitted facility.

Outfall 003

Outfall 003 represents the discharge of non-contact cooling water. Although storm water is discharged at the same location, its discharge is designated as Outfall 103 in order to facilitate the monitoring of storm water separately. Sampling of required parameters at Outfall 003 is to be conducted during dry weather conditions to ensure the samples are representative of the volume and nature of the discharge of non-contact cooling water.

Flow

The effluent flow from Outfall 003 is to be monitored in accordance with 327 IAC 5-2-13(a)(2). Flow measurement is to be reported weekly.

pH

Effluent limitations for pH have been retained from the previous permit and are consistent with the minimum water quality criteria of 327 IAC 2-1.5-8(c)(2). The pH of the effluent is to be within a range of 6.0 to 9.0 standard units. pH is to be measured weekly by a grab sample.

Oil and Grease

Monitoring requirements for oil and grease have been included in the renewal permit at Outfall 003. Discharges to a surface water shall not contain oil or other substances in amounts sufficient to create a visible film or sheen on the receiving water. It is not expected that the discharge will contain oil and grease. If oil and grease is detected, it could be a sign of improper operation and maintenance of the system. Therefore, if oil and grease is measured in the effluent in significant quantities, above 5 mg/l, the source of such discharge is to be investigated and eliminated, if feasible. Oil and grease is to be measured weekly by a grab sample.

Total Residual Chlorine

Due to the fact that the permitted facility seasonally adds chlorine to the intake water (for zebra mussel control) that ultimately discharges at Outfall 003, monitoring requirements and effluent limitations for total residual chlorine have been retained in the renewal permit. Monitoring is required on a daily basis when the facility is chlorinating and for an additional three days after chlorination has ceased. The effluent limitations are developed in accordance with the water quality-based requirements specific to GLI dischargers in 327 IAC 5-2-11.6. Considering the close proximity of the points of discharge from the three outfalls, the flows from each were combined in the calculation of WQBELs for total residual chlorine.

The effluent limitations of 0.01 mg/l as a monthly average and 0.02 mg/l as a daily maximum are water quality-based, and are below the limit of quantitation (LOQ) of 0.06 mg/l. In accordance with 327 IAC 5-2-11.6(h)(3), compliance with the daily maximum limit will be demonstrated when effluent concentrations for total residual chlorine are less than the LOQ. The permittee must comply with the monthly average limit, but may consider daily values that are less than the LOQ to be zero for purposes of calculating a monthly average value.

In accordance with 327 IAC 5-2-11.6(g)(1), mass limits and a mass-based compliance value for total residual chlorine are included in the renewal permit at Outfall 003, based on a flow volume of 18.7 MGD. Monitoring of total residual chlorine is to be conducted daily by a grab sample.

Total Residual Oxidants

Monitoring requirements and effluent limitations for total residual oxidants have not been retained in the renewal permit as bromine-based water treatment additives are no longer in use at the permitted facility.

Outfall 004

Outfall 004 represents the discharge of treated process wastewater from Outfalls 104 and 204, non-contact cooling water and Greenbelt II landfill leachate. Although storm water is discharged at the same location, it is treated through the treatment plants prior to discharge to Outfall 004, therefore separate storm water monitoring is not required at this time.

Flow

The effluent flow from Outfall 004 is to be monitored in accordance with 327 IAC 5-2-13(a)(2). Flow measurement is to be reported 5 X Weekly.

pH

Effluent limitations for pH have been retained from the previous permit and are consistent with the minimum water quality criteria of 327 IAC 2-1.5-8(c)(2). The pH of the effluent is to be within a range of 6.0 to 9.0 standard units. pH is to be measured 5 X Weekly by a grab sample.

Oil and Grease

Oil and Grease is limited under compliance point, Outfall 304 – the combined equivalent of internal Outfalls 104 and 204 which contribute to Outfall 004. Therefore, monitoring requirements for oil and grease have been included in the renewal permit at Outfall 004. Oil and grease is to be measured five (5) times weekly by a grab sample.

Total Residual Chlorine

Due to the fact that the permitted facility seasonally adds chlorine to the intake water (for zebra mussel control) that ultimately discharges at Outfall 004, monitoring requirements and effluent limitations for total residual chlorine have been retained in the renewal permit. Monitoring is required on a daily basis when the facility is chlorinating and for an additional three days after chlorination has ceased. The effluent limitations are developed in accordance with the water quality-based requirements specific to GLI dischargers in 327 IAC 5-2-11.6. Considering the close proximity of the points of discharge from the three outfalls, the flows from each were combined in the calculation of WQBELs for total residual chlorine.

The effluent limitations of 0.01 mg/l as a monthly average and 0.02 mg/l as a daily maximum are water quality-based, and are below the limit of quantitation (LOQ) of 0.06 mg/l. In accordance with 327 IAC 5-2-11.6(h)(3), compliance with the daily maximum limit will be demonstrated when effluent concentrations for total residual chlorine are less than the LOQ. The permittee must comply with the monthly average limit, but may consider daily values that are less than the LOQ to be zero for purposes of calculating a monthly average value.

In accordance with 327 IAC 5-2-11.6(g)(1), mass limits and a mass-based compliance value for total residual chlorine are included in the renewal permit at Outfall 004, based on a flow volume of 43.8 MGD. Monitoring of total residual chlorine is to be conducted daily by a grab sample .

Mercury

A reasonable potential analysis for Mercury was done in accordance with the reasonable potential statistical procedure in 327 IAC 5-2-11.5(b) from a Waste Load Allocation performed by the Department of Environmental Management in February 2009 (Appendix E). The results of the reasonable potential procedure are included in Table 2 of Appendix E and they show that there is no reasonable potential to exceed (RPE) the Water Quality Based Effluent Limits (WQBELs) for Mercury. Therefore, only monitoring for Mercury has been included upon renewal of this permit.

Free Cyanide

A reasonable potential analysis for Free Cyanide was done in accordance with the reasonable potential statistical procedure in 327 IAC 5-2-11.5(b) from a Waste Load Allocation performed by the Department of Environmental Management in February 2009 (Appendix E). The results of the reasonable potential procedure are included in Table 2 of Appendix E and they show that there is a reasonable potential to exceed (RPE) the Water Quality Based Effluent Limits (WQBELs) for Free Cyanide. Therefore, monthly average and daily maximum limits for Free Cyanide have been included upon renewal of this permit. The Projected Effluent Quality (PEQ) used to calculate the RPE for Free Cyanide was based on a limited data set, requiring a high multiplying factor. As a resultant of the high multiplying factor, the PEQ exceeded the Monthly Average and Daily Maximum Preliminary Effluent Limits (PELs). In light of this fact, a reopening clause for Free Cyanide has been included in this permit. The permittee will be allowed to request a review of reasonable potential for Free Cyanide upon the submission of more effluent data. The data is to be collected at a minimum frequency of two times per month and for a minimum duration of ten months. Once a formal request to reopen the permit has been made and the data submitted, the PEQ may be recalculated to determine if there is no longer a reasonable potential to exceed the WQBELs for Free Cyanide.

Cadmium, Copper and Silver

EPA has provided additional guidance to the State on determining the need for water quality based effluent limits at the final outfall using TBELs determined appropriate at an internal outfall. This approach is separate from the RPE statistical analysis done during the modeling phase of permit development. Once the TBELs are calculated these are then compared to the water quality based effluent limits using the allowed mass calculated for the TBELs. If the TBELs calculated mass exceed the water quality based effluent limits mass then there is a reasonable potential to exceed a water quality criterion and water quality based effluent limits are required at the final outfall. This has occurred for Cadmium, Copper and Silver for Outfall 004. Because of the more restrictive water quality based effluent limits at Outfall 004, corresponding mass based limits for these parameters at Outfall 304 are not necessary and are given as report only.

Total Residual Oxidants

Monitoring requirements and effluent limitations for total residual oxidants have not been retained in the renewal permit as bromine-based water treatment additives are no longer in use at the permitted facility.

Outfalls 001, 102 and 103 (Storm Water)

Outfalls 001, 102, and 103 regulate the discharge of storm water runoff from the permitted facility. Outfall 001 is retained from the previous permit and represents the direct discharge of storm water runoff to Portage-Burns Waterway. Outfalls 102 and 103 represent the discharge of storm water runoff prior to mixing with any other wastewater discharged at Outfalls 002 and 003 respectively. In addition to the Storm Water Pollution Prevention Plan (SWP3) requirements under Part I.E of the permit, the permittee will be required to monitor flow, TSS, COD, zinc, Ammonia, oil and grease, and pH. Noncontact cooling water is no longer discharged through Outfall 001, so Total Residual Chlorine is no longer a pollutant of concern at Outfall 001.

Outfall 500 (Temperature Requirements)

Noncontact cooling water is discharged at Outfalls 002, 003 and 004. The temperature of the effluent from the combined outfalls is regulated under 327 IAC 2-1.5-8(c)(4) for a warm water aquatic community. As Portage-Burns Waterway is designated as a salmonid water under 327 IAC 2-1.5-5(a)(3)(B), the effluent temperature is also regulated under 327 IAC 2-1.5-8(d)(2) for cold water fish. According to the Lake Michigan Fisheries Office of the Indiana Department of Natural Resources, spawning and imprinting of salmonids occurs from September through the end of May annually and can occur at any place in the watershed. The temperature criteria for a warm water aquatic community and for cold water fish apply outside of a mixing zone.

327 IAC 2-1.5-8(c)(4) sets a maximum temperature limit by month, while 327 IAC 2-1.5-8(d)(2)(A) prohibits temperatures from exceeding 70° F at any time, and 327 IAC 2-1.5-8(d)(2)(B) prohibits temperatures from exceeding 65° F during spawning and imprinting of salmonids. 327 IAC 2-1.5-8(d)(2) states that these temperature limits apply unless due to natural causes. Therefore, the temperature limits for cold water fish are inapplicable when measured temperatures upstream of the discharge from Outfalls 002, 003 and 004 equal or exceed the temperature limit for that day. 327 IAC 2-1.5-8(d)(2) also states that the maximum temperature rise above natural shall not exceed 2°F at any time or place.

The thermal effluent requirements in the previous permit are based on temperature criteria that applied prior to the 1990 change in water quality standards. Prior to 1990, Portage-Burns Waterway was considered a migration route for salmonids so the permit included temperature criteria for migration routes for those months where they were more stringent than criteria that applied to a warm water aquatic community. Portage-Burns Waterway is now designated as a salmonid water and the temperature criteria are more stringent than those that applied to salmonid migration routes. Therefore, the temperature limits in the previous permit were updated to include the more stringent of the temperature criteria for cold water fish in 2-1.5-8(d) or for a warm water aquatic community in 2-1.5-8(c)(4). The previous permit includes a provision for instances where the upstream temperature equals or exceeds the temperature limit for any given day. In these instances the temperature from the combined discharge from Outfalls 002, 003 and 004 is prohibited from raising the temperature greater than 2°F at the edge of the mixing zone. This provision is only consistent with the temperature criteria for cold water fish. Based on a review of upstream temperature data presented in Attachment 35 of the wasteload allocation report in Appendix E, there is no reasonable potential to exceed the maximum temperature requirements for warm water aquatic communities during the months when temperature criteria for cold water fish are more stringent. Therefore, this provision was retained for those months when the temperature criteria for cold water fish are more stringent.

The following represents a month-by-month breakdown of the temperature limits included in the renewal permit:

	Jan	Feb	Mar	Apr	May	Jun	Jul	Aug	Sept	Oct	Nov	Dec
°F	50	50	60	65*	65*	70*	70*	70*	65*	65*	65*	57
°C	10	10	15.6	18.3*	18.3*	21.1*	21.1*	21.1*	18.3*	18.3*	18.3*	14

* in instances when the upstream temperature measurement equals or exceeds the referenced monthly temperature limit, the discharge will be considered to be in compliance with temperature requirements when the temperature rise at the edge of the mixing zone is no greater than 2°F.

Compliance with the thermal requirements in the previous permit is determined using a model developed by the facility in 1991 that calculates the temperature rise at the edge of the mixing zone for each outfall. A review of the model is included in the wasteload allocation report in Appendix E. Based on the review, the model may no longer be used to determine compliance with the temperature limits in the permit. Instead, the permit includes a requirement to measure the temperature in Portage-Burns Waterway at the edge of the mixing zone. The thermal mixing zone for Outfalls 002, 003 and 004 is the area in Portage-Burns Waterway extending from Outfall 002 to one-half the width of Portage-Burns Waterway and to a distance of 300 feet downstream of Outfall 004. Temperature measurements shall be taken at the edge of the mixing zone approximately 300 feet downstream of Outfall 004 and at mid-stream.

Instead of measuring the temperature at the edge of the mixing zone, the permittee may choose to submit a new model for review by IDEM as a measure to achieve compliance with the temperature limits in this permit. A reopening clause has been included in this permit to allow review for a proposed thermal model whereby the permit may be reopened to include such a provision for compliance. Any new model must limit the mixing zone to one-half the width of Portage-Burns Waterway and account for: upstream flow and temperature; effluent flow and temperature; and, the combined effect of the discharges from Outfalls 002, 003 and 004 on the temperature at the edge of the mixing zone. The permittee has a 24 month schedule of compliance to develop a newly proposed model or install monitoring equipment to comply with the current thermal effluent requirements. Any proposed model should be provided to IDEM at least 90 (ninety) days prior to anticipated use of model for review and must be approved by IDEM before use.

As an interim condition the permittee shall submit a progress report to the Compliance Data Section of OWQ no later than twelve (12) months from the effective date of this permit. This report shall include detailed information on the steps the permittee has taken to achieve compliance with the final temperature limitations.

6.2 Reopening Clauses

The following reopening clauses were incorporated into Part I.I. of the permit allowing it to be modified or, alternately, revoked and reissued after public notice and opportunity for hearing;

- to comply with any applicable effluent limitation or standard issued or approved under 301(b)(2)(C),(D) and (E), 304 (b)(2), and 307(a)(2) of the Clean Water Act, if the effluent limitation or standard so issued or approved:

    a. contains different conditions or is otherwise more stringent than any effluent limitation in the permit; or

    b. controls any pollutant not limited in the permit.

- to incorporate any of the reopening clause provisions cited at 327 IAC 5-2-16.

- to include a case-specific Limit of Detection (LOD) and/or Limit of Quantitation (LOQ). The permittee must demonstrate that such action is warranted in accordance with the procedures specified under Appendix B, 40 CFR Part 136, using the most sensitive analytical methods approved by EPA under 40 CFR Part 136, or approved by the Commissioner.

- to revise or remove the requirements of the pollutant minimization program, if supported by information generated as a result of the program.

- request a review to determine if there is no longer a reasonable potential to exceed the Water Quality Based Effluent Limits for Free Cyanide based upon the submission of more effluent data. The data is to be collected at a minimum frequency of two times per month and for a duration of ten months.

- to allow review for a proposed thermal model whereby the permit may be reopened to include such a provision for compliance. Any new model must limit the mixing zone to one-half the width of Portage-Burns Waterway and account for: upstream flow and temperature; effluent flow and temperature; and, the combined effect of the discharges from Outfalls 002, 003 and 004 on the temperature at the edge of the mixing zone.

6.3 Spill Response and Reporting Requirement

Reporting requirements associated with the Spill Reporting, Containment, and Response requirements of 327 IAC 2-6.1 are included in Part II.B.2.c. and Part II.C.3. of the NPDES permit. Spills from the permitted facility meeting the definition of a spill under 327 IAC 2-6.1-4(15), the applicability requirements of 327 IAC 2-6.1-1, and the Reportable Spills requirements of 327 IAC 2-6.1-5 (other than those meeting an exclusion under 327 IAC 2-6.1-3 or the criteria outlined below) are subject to the Reporting Responsibilities of 327 IAC 2-6.1-7.

It should be noted that the reporting requirements of 327 IAC 2-6.1 do not apply to those discharges or exceedances that are under the jurisdiction of an applicable permit when the substance in question is covered by the permit and death or acute injury or illness to animals or humans does not occur. In order for a discharge or exceedance to be under the jurisdiction of this NPDES permit, the substance in question (a) must have been discharged in the normal course of operation from an outfall listed in this permit, and (b) must have been discharged from an outfall for which the permittee has authorization to discharge that substance.

6.4 Pollutant Minimization Program Requirements

The renewal permit includes WQBELs for total residual chlorine and silver that are below the limit of quantitation for the approved analytical methods. In accordance with 327 IAC 5-2-11.6(h)(7), the permit includes a provision requiring the permittee to develop and conduct a pollutant minimization program (PMP) for total residual chlorine and silver. In accordance with 327 IAC 5-2-11.6(h)(7), the permittee is required to develop and conduct a pollutant minimization program (PMP) for each pollutant with a WQBEL below the LOQ. The goal of PMP is to maintain the effluent at or below the WQBEL.

Part I.G. of the permit outlines the requirements of the PMP. In lieu of a PMP, the permittee may chose to demonstrate that the discharge of total residual chlorine and silver is reasonably expected to be in compliance with the WQBEL at the points of discharge under the provisions of 327 IAC 5-2-11.6(h)(7)(B). One basic PMP for TRC can be submitted for all affected Outfalls.

6.5 Antibacksliding

The relaxation of effluent limitations from comparable limits in the previous permit is subject to federal and state antibacksliding requirements. In the case of the technology-based effluent limitations calculated from the federal effluent guidelines at Outfall 104, the applicable regulations are the federal antibacksliding provisions of 40 CFR 122.44(l)(1) and (2). According to 40 CFR 122.44(l)(1), backsliding is prohibited unless circumstances on which the previous permit were based have materially and substantially changed since the time the permit was issued and would constitute cause for permit modification or revocation and reissuance under 40 CFR 122.62. Because effluent data indicates that the permittee consistently complies with the technology-based effluent limitations at Outfall 104, and those mass limits were not adjusted through changes in production through the use of BPJ in the last permit, any increases in production values since the permit was last issued are not considered to be of a material and substantial nature. Therefore, the technology-based effluent limitations at Outfall 104 have not been raised to levels calculated based on current production values.

6.6 Permit Processing/Public Comment

Pursuant to IC 13-15-5-1, IDEM will publish a general notice in the newspaper with the largest general circulation within the above county. A 30-day comment period is available in order to solicit input from interested parties, including the general public. Comments concerning the draft permit should be submitted in accordance with the procedure outlined in the enclosed public notice form.

Appendix A

Wastewater Flow Schematic I

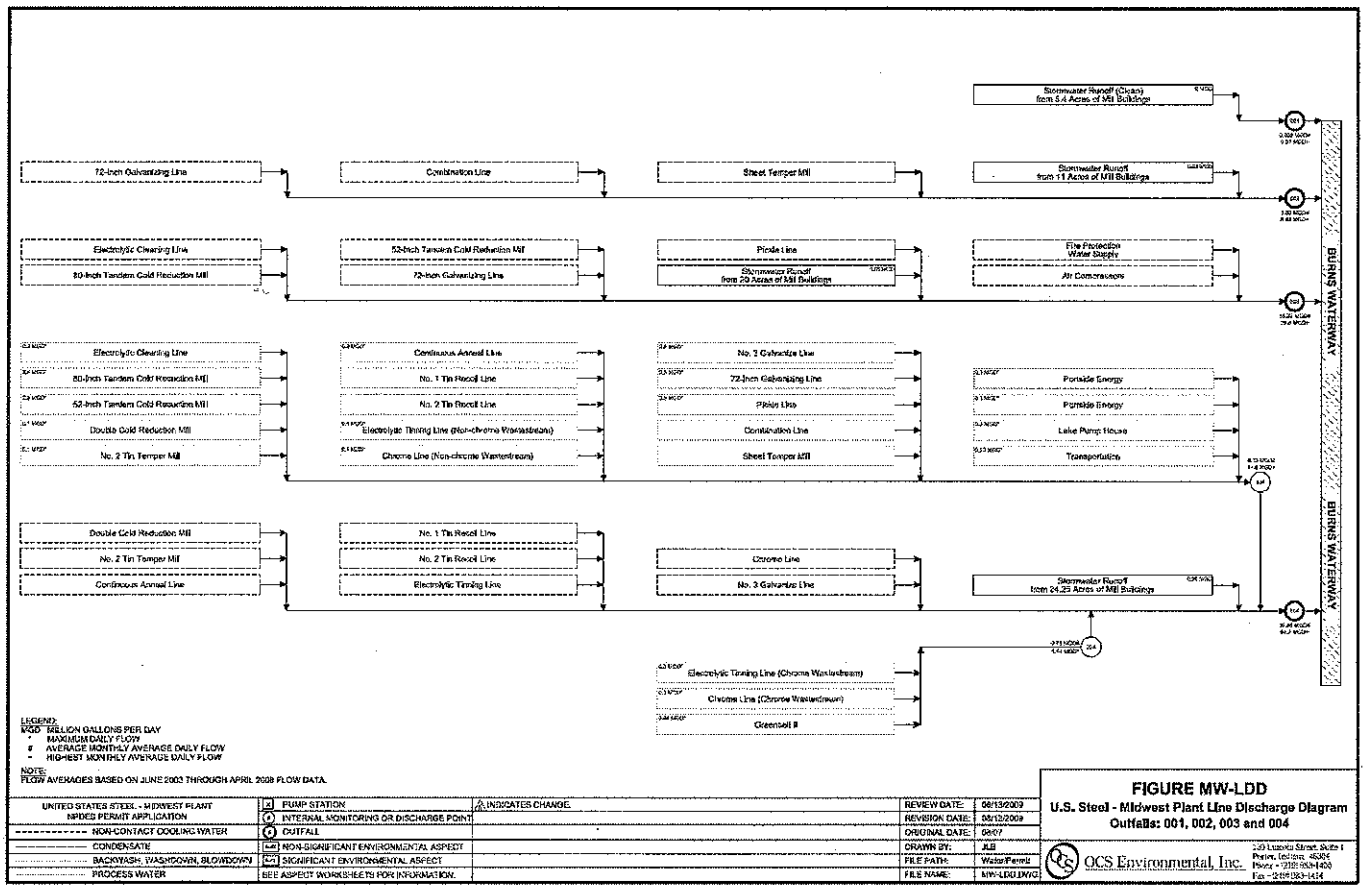

Appendix A
(cont.)
Wastewater Flow Schematic II

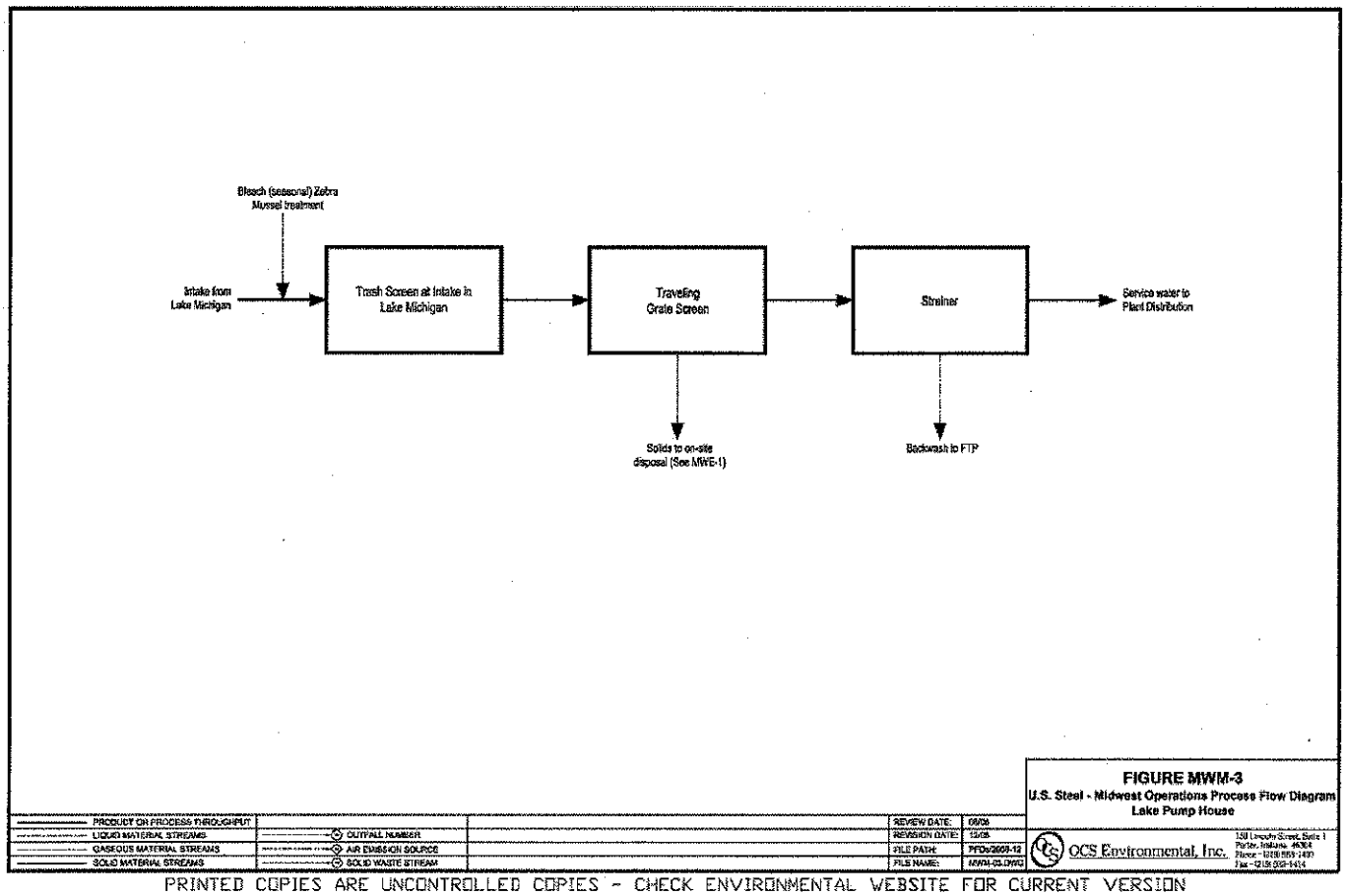

PRINTED COPIES ARE UNCONTROLLED COPIES - CHECK ENVIRONMENTAL WEBSITE FOR CURRENT VERSION

Appendix A
(cont.)
Wastewater Flow Schematic III

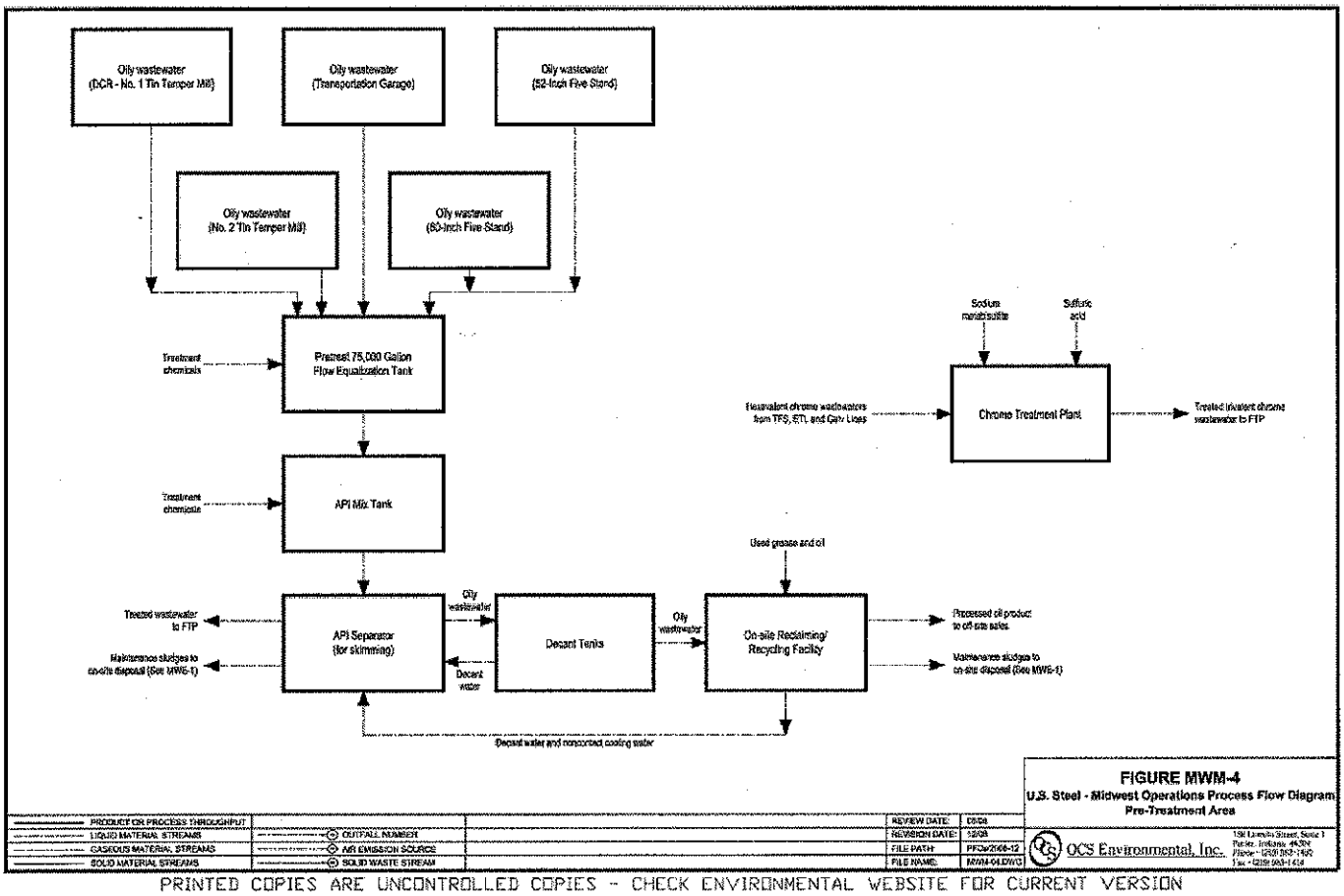

PRINTED COPIES ARE UNCONTROLLED COPIES - CHECK ENVIRONMENTAL WEBSITE FOR CURRENT VERSION

Appendix A
(cont.)
Wastewater Flow Schematic IV

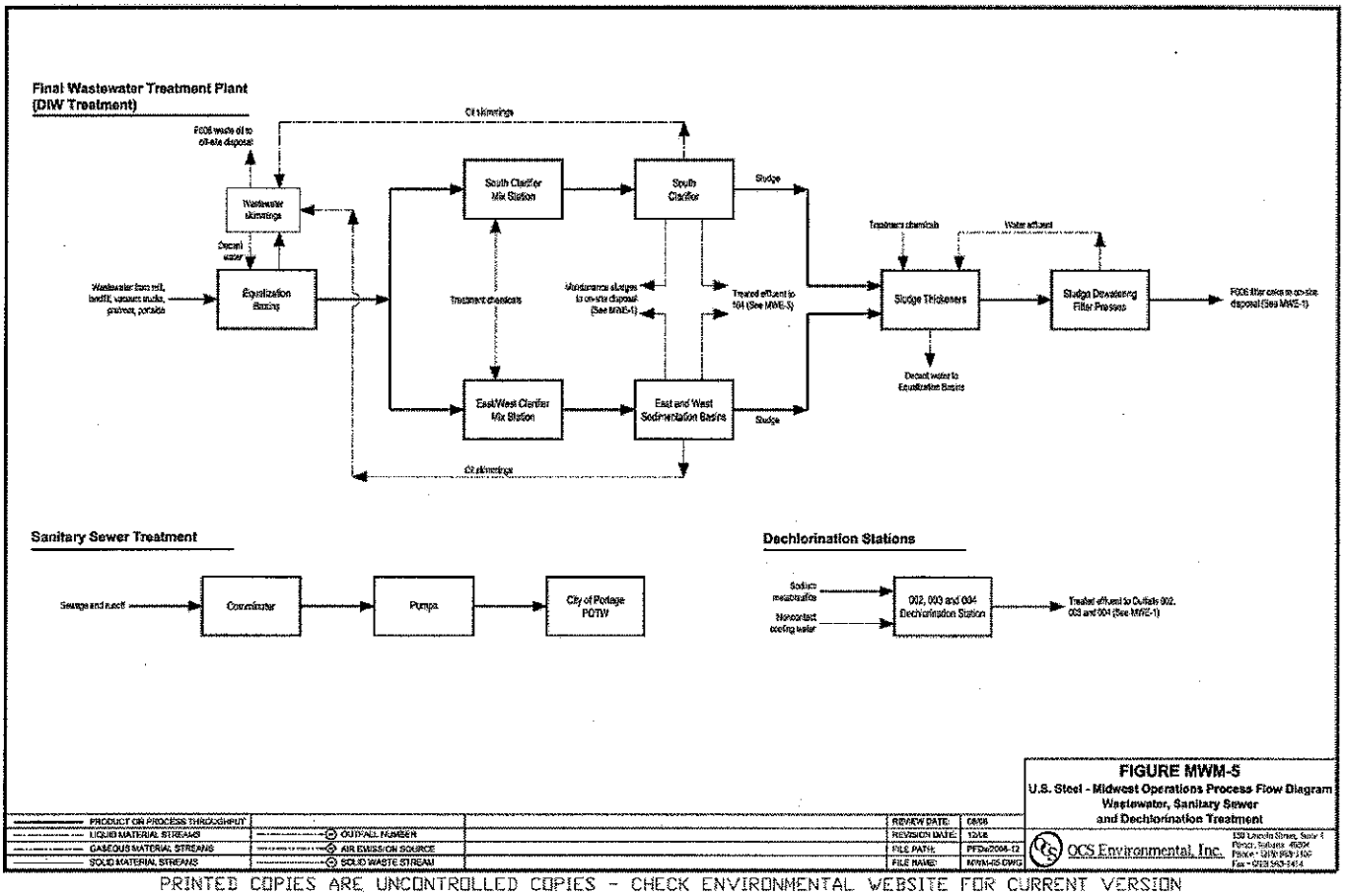

FIGURE MWM-5
U.S. Steel - Midwest Operations Process Flow Diagram Wastewater, Sanitary Sewer and Dechlorination Treatment

PRODUCT OR PROCESS THROUGHPUT
LIQUID MATERIAL STREAMS — OUTFALL NUMBER
GASEOUS MATERIAL STREAMS — AIR EMISSION SOURCE
SOLID MATERIAL STREAMS — SOLID WASTE STREAM

REVIEW DATE	08/08
REVISION DATE	12/08
FILE PATH	PFDs/2008-12
FILE NAME	MWM-05.DWG

OCS Environmental, Inc.

PRINTED COPIES ARE UNCONTROLLED COPIES - CHECK ENVIRONMENTAL WEBSITE FOR CURRENT VERSION

Appendix A
(cont.)
Wastewater Flow Schematic V

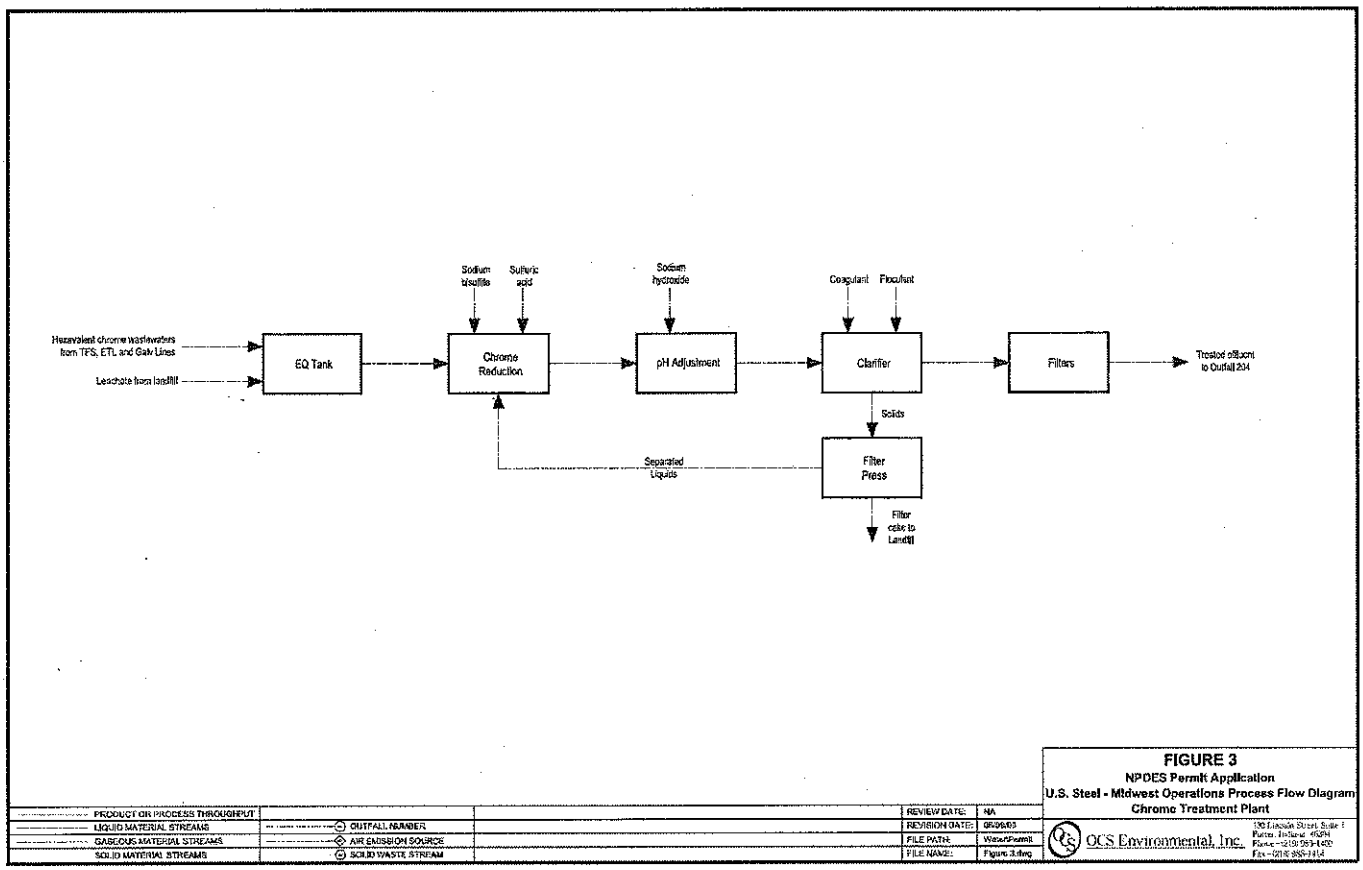

FIGURE 3
NPDES Permit Application
U.S. Steel - Midwest Operations Process Flow Diagram
Chrome Treatment Plant

PRODUCT OR PROCESS THROUGHPUT			REVIEW DATE:	NA
LIQUID MATERIAL STREAMS	OUTFALL NUMBER		REVISION DATE:	06/06/03
GASEOUS MATERIAL STREAMS	AIR EMISSION SOURCE		FILE PATH:	Water/Permit
SOLID MATERIAL STREAMS	SOLID WASTE STREAM		FILE NAME:	Figure 3.dwg

OCS Environmental, Inc.

Appendix B

Technology-based Effluent Limitations - TSS

Operation	40 CFR	Production in 1,000 lbs/day * # scrubbers **flow (MGD)	Multiplication factor: (40 CFR 420 = lbs/1,000 lbs of product) (40 CFR 433 = mg/l)		Effluent Limitations (lbs/day)	
			Monthly Average	Daily Maximum	Monthly Average	Daily Maximum
HCl Pickling - strip, sheet & plate	Subpart I - 420.92(b)(2)	9,688	0.035	0.0818	339.08	792.48
HCl Pickling - fume scrubbers	Subpart I - 420.92(b)(4)	* 2	2.45 (Kg/day)	5.72 (Kg/day)	10.8	25.22
Cold Forming - cold rolling mills, recirculation	Subpart J - 420.102(a)(2)	4,082	0.00313	0.00626	12.78	25.55
Cold Forming - cold rolling mills, combination	Subpart J - 420.102(a)(3)	10,193	0.0376	0.0751	383.26	765.49
Cold Forming - cold rolling mills, direct application	Subpart J - 420.102(a)(5)	2,455	0.0501	0.1	123	245.5
Alkaline Cleaning - batch	Subpart K - 420.112(a)	3,865	0.0313	0.073	120.97	282.15
Alkaline Cleaning - continuous	Subpart K - 420.112(b)	3,962	0.0438	0.102	173.54	404.12
Alkaline Cleaning - batch and continuous (NSPS)	Subpart L - 420.114(a)	474	0.00626	0.0146	2.97	6.92
Hot Coating - galvanizing, terne coating and other coatings - strip, sheet, miscellaneous	Subpart L - 420.122(a)(1)	3,057	0.0751	0.175	229.58	534.98
Hot Coating - galvanizing, terne coating and other coatings- strip, sheet and miscellaneous (NSPS)	Subpart L - 420.124(a)(1)	1,375	0.0188	0.0438	25.85	60.23
Metal Finishing	433.13(a)	** 2.3	31 mg/l	80 mg/l	595	1151.61
				Total	**2016.83**	**4294.25**

Technology-based Effluent Limitations - Oil & Grease

Operation	40 CFR	Production in 1,000 lbs/day * # scrubbers **flow (MGD)	Multiplication factor: (40 CFR 420 = lbs/1,000 lbs of product) (40 CFR 433 = mg/l)		Effluent Limitations (lbs/day)	
			Monthly Average	Daily Maximum	Monthly Average	Daily Maximum
HCl Pickling - strip, sheet & plate	Subpart I - 420.92(b)(2)	9,688	0.0117	0.035	113.35	339.08
HCl Pickling - fume scrubbers	Subpart I - 420.92(b)(4)	* 2	0.819 (Kg/day)	2.45 (Kg/day)	3.61	10.8
Cold Forming - cold rolling mills, recirculation	Subpart J - 420.102(a)(2)	4,082	0.00104	0.00261	4.25	10.65
Cold Forming - cold rolling mills, combination	Subpart J - 420.102(a)(3)	10,193	0.0125	0.0313	127.41	319.04
Cold Forming - cold rolling mills, direct application	Subpart J - 420.102(a)(5)	2,455	0.0167	0.0417	41	102.37
Alkaline Cleaning - batch	Subpart K - 420.112(a)	3,865	0.0104	0.0313	40.2	120.97
Alkaline Cleaning - continuous	Subpart K - 420.112(b)	3,962	0.0146	0.0438	57.85	173.54
Alkaline Cleaning - batch and continuous (NSPS)	Subpart L - 420.114(a)	474	0.00209	0.00626	0.99	2.97
Hot Coating - galvanizing, terne coating and other coatings - strip, sheet, miscellaneous	Subpart L - 420.122(a)(1)	3,057	0.025	0.0751	76.43	229.58
Hot Coating - galvanizing, terne coating and other coatings- strip, sheet and miscellaneous (NSPS)	Subpart L - 420.124(a)(1)	1,375	0.00626	0.0188	8.61	25.85
Metal Finishing	433.13(a)	** 2.3	26 mg/l	52 mg/l	499.03	998.06
				Total	**972.73**	**2332.91**

Technology-based Effluent Limitations - Total Lead

Operation	40 CFR	Production in 1,000 lbs/day * # scrubbers **flow (MGD)	Multiplication factor: (40 CFR 420 = lbs/1,000 lbs of product) (40 CFR 433 = mg/l)		Effluent Limitations (lbs/day)	
			Monthly Average	Daily Maximum	Monthly Average	Daily Maximum
HCl Pickling - strip, sheet & plate	Subpart I - 420.92(b)(2)	9,688	0.000175	0.000526	1.7	5.1
HCl Pickling - fume scrubbers	Subpart I - 420.92(b)(4)	* 2	0.0123 (Kg/day)	0.0368 (Kg/day)	0.05	0.16
Cold Forming - cold rolling mills, recirculation	Subpart J - 420.102(a)(2)	4,082	0.0000156	0.0000469	0.06	0.19
Cold Forming - cold rolling mills, combination	Subpart J - 420.102(a)(3)	10,193	0.000188	0.000563	1.92	5.74
Cold Forming - cold rolling mills, direct application	Subpart J - 420.102(a)(5)	2,455	0.00025	0.000751	0.61	1.84
Hot Coating - galvanizing, terne coating and other coatings - strip, sheet, miscellaneous	Subpart L - 420.122(a)(1)	3,057	0.000376	0.00113	1.15	3.45
Hot Coating - galvanizing, terne coating and other coatings- strip, sheet and miscellaneous (NSPS)	Subpart L - 420.124(a)(1)	1,375	0.0000939	0.000282	0.13	0.39
Metal Finishing	433.14(a)	** 2.3	0.43 mg/l	0.69 mg/l	8.25	13.24
				Total	**13.87**	**30.11**

Appendix C

Technology-based Effluent Limitations - Total Zinc

Operation	40 CFR	Production in 1,000 lbs/day * # scrubbers **flow (MGD)	Multiplication factor: (40 CFR 420 = lbs/1,000 lbs of product) (40 CFR 433 = mg/l)		Effluent Limitations (lbs/day)	
			Monthly Average	Daily Maximum	Monthly Average	Daily Maximum
HCl Pickling - strip, sheet & plate	Subpart I - 420.92(b)(2)	9,688	0.000234	0.000701	2.27	6.79
HCl Pickling - fume scrubbers	Subpart I - 420.92(b)(4)	* 2	0.0164 (Kg/day)	0.0491 (Kg/day)	0.07	0.22
Cold Forming - cold rolling mills, recirculation	Subpart J - 420.102(a)(2)	4,082	0.0000104	0.0000313	0.04	0.13
Cold Forming - cold rolling mills, combination	Subpart J - 420.102(a)(3)	10,193	0.000125	0.000376	1.27	3.83
Cold Forming - cold rolling mills, direct application	Subpart J - 420.102(a)(5)	2,455	0.000167	0.000501	0.41	1.23
Hot Coating - galvanizing, terne coating and other coatings - strip, sheet, miscellaneous	Subpart L - 420.122(a)(1)	3,057	0.0005	0.0015	1.53	4.59
Hot Coating - galvanizing, terne coating and other coatings-strip, sheet and miscellaneous (NSPS)	Subpart L - 420.124(a)(1)	1,375	0.000125	0.000376	0.17	0.52
Metal Finishing	433.14(a)	** 2.3	1.48 mg/l	2.61 mg/l	28.41	50.1
				Total	**34.17**	**67.41**

Technology-based Effluent Limitations - Total Chromium

Operation	40 CFR	Production in 1,000 lbs/day * # scrubbers **flow (MGD)	Multiplication factor: (40 CFR 420 = lbs/1,000 lbs of product) (40 CFR 433 = mg/l)		Effluent Limitations (lbs/day)	
			Monthly Average	Daily Maximum	Monthly Average	Daily Maximum
Metal Finishing	433.14(a)	** 2.3	1.71 mg/l	2.77 mg/l	32.82	53.17
				Total	**32.82**	**53.17**

Technology-based Effluent Limitations - Total Nickel

Operation	40 CFR	Production in 1,000 lbs/day * # scrubbers **flow (MGD)	Multiplication factor: (40 CFR 420 = lbs/1,000 lbs of product) (40 CFR 433 = mg/l)		Effluent Limitations (lbs/day)	
			Monthly Average	Daily Maximum	Monthly Average	Daily Maximum
Metal Finishing	433.14(a)	** 2.162	2.38 mg/l	3.98 mg/l	42.94	71.81
				Total	**42.94**	**71.81**

Technology-based Effluent Limitations - Total Cadmium

Operation	40 CFR	Production in 1,000 lbs/day * # scrubbers **flow (MGD)	Multiplication factor: (40 CFR 420 = lbs/1,000 lbs of product) (40 CFR 433 = mg/l)		Effluent Limitations (lbs/day)	
			Monthly Average	Daily Maximum	Monthly Average	Daily Maximum
Metal Finishing	433.14(a)	** 2.162	0.26 mg/l	0.69 mg/l	4.69	12.45
				Total	**4.69**	**12.45**

Technology-based Effluent Limitations - Total Copper

Operation	40 CFR	Production in 1,000 lbs/day * # scrubbers **flow (MGD)	Multiplication factor: (40 CFR 420 = lbs/1,000 lbs of product) (40 CFR 433 = mg/l)		Effluent Limitations (lbs/day)	
			Monthly Average	Daily Maximum	Monthly Average	Daily Maximum
Metal Finishing	433.14(a)	** 2.162	2.07 mg/l	3.38 mg/l	37.35	60.98
				Total	**37.35**	**60.98**

Technology-based Effluent Limitations - Total Cyanide

Operation	40 CFR	Production in 1,000 lbs/day * # scrubbers **flow (MGD)	Multiplication factor: (40 CFR 420 = lbs/1,000 lbs of product) (40 CFR 433 = mg/l)		Effluent Limitations (lbs/day)	
			Monthly Average	Daily Maximum	Monthly Average	Daily Maximum
Metal Finishing	433.14(a)	** 2.3	0.65 mg/l	1.20 mg/l	12.48	23.03
				Total	**12.48**	**23.03**

Appendix D

Technology-based Effluent Limitations - Hex. Chromium

Operation	40 CFR	Production in 1,000 lbs/day * # scrubbers **flow(MGD)	Multiplication factor:(40 CFR 420 = lbs/1,000 lbs of product)(40 CFR 433 = mg/l)		Effluent Limitations (lbs/day)	
			Monthly Average	Daily Maximum	Monthly Average	Daily Maximum
Hot Coating - galvanizing, terne coating and other coatings - strip, sheet, miscellaneous	Subpart L - 420.122(a)(1)	3,057	0.0000501	0.00015	0.15	0.46
Hot Coating - galvanizing, terne coating and other coatings - strip, sheet, miscellaneous	Subpart L - 420.124(a)(1)	1,375	0.0000125	0.0000376	0.02	0.05
				Total	0.17	0.51

Technology-based Effluent Limitations - Total Silver

Operation	40 CFR	Production in 1,000 lbs/day * # scrubbers **flow (MGD)	Multiplication factor: (40 CFR 420 = lbs/1,000 lbs of product) (40 CFR 433 = mg/l)		Effluent Limitations (lbs/day)	
			Monthly Average	Daily Maximum	Monthly Average	Daily Maximum
Metal Finishing	433.14(a)	** 2.162	0.24 mg/l	0.43 mg/l	4.33	7.76
				Total	4.33	7.76

Technology-based Effluent Limitations - Naphthalene

Operation	40 CFR	Production in 1,000 lbs/day * # scrubbers **flow (MGD)	Multiplication factor: (40 CFR 420 = lbs/1,000 lbs of product) (40 CFR 433 = mg/l)		Effluent Limitations (lbs/day)	
			Monthly Average	Daily Maximum	Monthly Average	Daily Maximum
Cold Forming - cold rolling mills, recirculation	Subpart J - 420.102(a)(2)	4,082		0.0000104		0.04
Cold Forming - cold rolling mills, combination	Subpart J - 420.102(a)(3)	10,193		0.000125		1.27
Cold Forming - cold rolling mills, direct application	Subpart J - 420.102(a)(5)	2,455		0.000167		0.41
				Total		1.72

chnology-based Effluent Limitations - Tetrachloroethyle

Operation	40 CFR	Production in 1,000 lbs/day * # scrubbers **flow (MGD)	Multiplication factor: (40 CFR 420 = lbs/1,000 lbs of product) (40 CFR 433 = mg/l)		Effluent Limitations (lbs/day)	
			Monthly Average	Daily Maximum	Monthly Average	Daily Maximum
Cold Forming - cold rolling mills, recirculation	Subpart J - 420.102(a)(2)	4,082		0.0000156		0.06
Cold Forming - cold rolling mills, combination	Subpart J - 420.102(a)(3)	10,193		0.000188		1.92
Cold Forming - cold rolling mills, direct application	Subpart J - 420.102(a)(5)	2,455		0.00025		0.61
				Total		2.59

Technology-based Effluent Limitations - TTO

Operation	40 CFR	Production in 1,000 lbs/day * # scrubbers **flow (MGD)	Multiplication factor: (40 CFR 420 = lbs/1,000 lbs of product) (40 CFR 433 = mg/l)		Effluent Limitations (lbs/day)	
			Monthly Average	Daily Maximum	Monthly Average	Daily Maximum
Metal Finishing	433.14(a)	** 2.162		2.13 mg/l		38.43
				Total		38.43

Appendix E

DEPARTMENT OF ENVIRONMENTAL MANAGEMENT

INDIANAPOLIS

OFFICE MEMORANDUM

Date: June 8, 2010

To: Matthew Carmichael
Industrial Permits Section

From: John Elliott
Permits Branch

Subject: Wasteload Allocation Report for U.S. Steel - Midwest Plant in Porter County (IN0000337, WLA000062)

Reasonable potential and antidegradation analyses for individual toxic pollutants were done for the renewal of the NPDES permit for U.S. Steel - Midwest Plant (formerly National Steel, Midwest Division). The analyses were done for Outfalls 002, 003 and 004. In addition, a reasonable potential analysis for whole effluent toxicity (WET) was done for Outfall 004 and the thermal effluent requirements in the current permit for Outfalls 002, 003 and 004 were reviewed. Outfalls 002 and 003 consist of noncontact cooling water and stormwater while Outfall 004 consists of noncontact cooling water, stormwater and treated process wastewater (the treated process wastewater is regulated through internal Outfall 104). The discharge through each outfall is to Portage-Burns Waterway, a tributary to the Indiana portion of the open waters of Lake Michigan. Therefore, the discharge through each outfall is covered under the rules for the Great Lakes system. The effluent flows used in the analyses were 7.08 mgd for Outfall 002, 18.7 mgd for Outfall 003 and 43.8 mgd for Outfall 004.

Portage-Burns Waterway is designated for full-body contact recreation and shall be capable of supporting a well-balanced, warm water aquatic community. The East Branch of Little Calumet River and its tributaries downstream to Lake Michigan via Burns Ditch (Portage-Burns Waterway) are designated in 327 IAC 2-1.5-5(a)(3)(B) as salmonid waters and shall be capable of supporting a salmonid fishery. The Indiana portion of the open waters of Lake Michigan is designated in 327 IAC 2-1.5-19(b)(2) as an outstanding state resource water (OSRW). Discharges to tributaries of OSRWs are subject to the antidegradation implementation procedure for OSRWs in 327 IAC 5-2-11.7(a)(2).

The 2008 assessment unit for Portage-Burns Waterway is INC0164_T1108. This assessment unit is on the 2008 303(d) list for PCBs in fish tissue. The Lake Michigan shoreline is on the 2008 303(d) list for mercury and PCBs in fish tissue. A TMDL for *E. coli* for Portage-Burns Waterway (assessment unit INC0164_T1108) was approved by U.S. EPA January 28, 2005 and is part of the Little Calumet/Burns Ditch TMDL. The TMDL requires load reductions from nonpoint sources,

but not from point source discharges. The TMDL does not require permit limits for *E. coli* for Outfall 002, 003 or 004. A TMDL for *E. coli* for the Lake Michigan shoreline was approved by U.S. EPA September 1, 2004 and is part of the Lake Michigan TMDL.

The stream design flows used in the wasteload allocation analysis were calculated using daily mean flow data reported at USGS gaging station 04095090 Burns Ditch at Portage. This station is located at the bridge upstream of Outfall 002. The three outfalls are located approximately 0.06 miles (004), 0.4 miles (003) and 0.6 miles (002) upstream of Lake Michigan on the east bank of Portage-Burns Waterway. Daily mean flow data approved by the USGS are available for this station for the period October 1, 1994 through September 30, 2007. The U.S. EPA program DFLOW was used to calculate stream design flows using the daily mean flow data. The Q7,10 at the gage is 110 cfs.

The facility adds chlorine to their intake water to control zebra mussels and the current permit includes limits for total residual chlorine at Outfalls 002, 003 and 004. Therefore, a reasonable potential analysis was done under 5-2-11.5(a) and it was determined that water quality-based effluent limitations (WQBELs) for total residual chlorine are required for Outfalls 002, 003 and 004. A reasonable potential analysis for Outfalls 002 and 003 was done for pollutants of concern other than total residual chlorine in accordance with the provision for discharges of once-through noncontact cooling water in 327 IAC 5-2-11.5(g). The results of the analysis show that there is no reasonable potential to exceed for any of the pollutants of concern considered in the analysis. In accordance with 5-2-11.5(g)(6), it is assumed that the stormwater discharges to Outfalls 002 and 003 will be regulated as if they discharged directly to Portage-Burns Waterway and will receive requirements consistent with other stormwater discharges.

A reasonable potential analysis for Outfall 004 was done for pollutants of concern other than total residual chlorine in accordance with the reasonable potential statistical procedure in 327 IAC 5-2-11.5(b). The effluent data available to conduct the reasonable potential analysis consist of a limited number of data points provided as part of the permit renewal application. The data were collected in 1994, 2001, 2008, 2009 and 2010. The facility monitors their treated process wastewater at internal Outfall 104 for many of the pollutants of concern at Outfall 004. Data collected at internal Outfall 104 were used in a separate, conservative test of reasonable potential for Outfall 004 due to a limited data set at Outfall 004. It is considered conservative because the available data show that the pollutant concentrations at Outfall 004 are lower than those at internal Outfall 104 due to the addition of noncontact cooling water to Outfall 004.

The calculation of the monthly average and daily maximum projected effluent quality (PEQ) for individual toxic pollutants using data collected at Outfall 004 is included in Table 1. The results of the reasonable potential procedure are included in Table 2 and they show that there is a reasonable potential to exceed for silver and free cyanide. The calculation of the monthly average and daily maximum PEQs for chloride, fluoride and sulfate using data collected at internal Outfall 104 is included in Table 3. The results are included in Table 4 and they show that there is no reasonable potential to exceed for chloride, fluoride or sulfate.

A PEQ exceeded a PEL in Table 2 because a high multiplying factor was used to calculate the PEQ due to a limited data set. In no case did an effluent sample with a quantifiable value exceed a PEL. Even though reasonable potential for silver and free cyanide are based on limited data sets, WQBELs are still required based on 5-2-11.5(b). However, it is recommended that the facility be allowed to request a review of reasonable potential after more data are collected. The data should be collected at a minimum frequency of two times per month and for a minimum duration of ten months. This will allow monthly averages and a coefficient of variation to be calculated.

The WQBELs for total residual chlorine for Outfalls 002, 003 and 004 are included in Tables 5, 6, and 7, respectively. Considering the location of the three outfalls, the flows from the three outfalls were combined in the calculation of WQBELs for total residual chlorine. Water quality-based effluent limitations for silver and free cyanide at Outfall 004 are included in Table 7 based on the results of the reasonable potential analysis. Water quality-based effluent limitations for the pollutants of concern that are regulated by Federal Effluent Limitation Guidelines at internal Outfall 104 are included for Outfall 004 in Table 7. Although the reasonable potential analysis for these pollutants of concern, except silver, at Outfall 004 showed that there was no reasonable potential based on the statistical procedure in 5-2-11.5(b), the WQBELs are being provided for comparison to technology-based effluent limitations that apply to internal Outfall 104.

A reasonable potential analysis for Outfall 004 for WET was done in accordance with the Federal Great Lakes Guidance in 40 CFR Part 132. U.S. EPA overpromulgated Indiana's reasonable potential procedure for WET in 327 IAC 5-2-11.5(c)(1) and Indiana is now required to apply specific portions of the Federal Great Lakes Guidance when conducting reasonable potential analyses for WET. Indiana's requirements are included under 40 CFR Part 132.6. The results of the reasonable potential analysis for WET show that the discharge from Outfall 004 has a reasonable potential to exceed the numeric interpretation of the narrative criterion for chronic WET. Therefore, WQBELs are required for WET.

Once a determination is made that WQBELs are required for WET, the WQBELs are established in accordance with 327 IAC 5-2-11.6(d). This provision allows a case-by-case determination of whether to establish a WQBEL for only acute or chronic WET, or WQBELs for both acute and chronic WET, the number of species required for testing and the particular species required for testing. The purpose of this WLA report is not to make these determinations, but to provide the numerical limits. The numerical limits for acute and chronic WET are included in Table 7.

Antidegradation for discharges to tributaries of OSRWs under 327 IAC 5-2-11.7(a)(2) was considered for this discharge. New mass limits for total residual chlorine are required for Outfalls 002, 003 and 004. New mass and concentration limits for silver and free cyanide are required for Outfall 004. According to 5-2-11.7(a)(2), for a new or increased discharge of a pollutant or pollutant parameter from a new or existing Great Lakes discharger into a tributary of an OSRW for which a new or increased permit limit would be required, the following apply:

(1) 5-2-11.3(a) and 5-2-11.3(b) apply to the new or increased discharge; and
(2) the discharge shall not cause a significant lowering of water quality in the OSRW.

The provisions under 5-2-11.3(b) were applied to the new limits for total residual chlorine, silver and free cyanide. The new limits for total residual chlorine, silver and free cyanide were determined to not cause a significant lowering of water quality in Portage-Burns Waterway under 5-2-11.3(b)(1)(B).

According to nonrule policy document Water-002-NPD, "Antidegradation Requirements for Outstanding State Resource Waters Inside the Great Lakes Basin," if a new or increased discharge into a tributary of an OSRW does not cause a significant lowering of water quality in the tributary, as determined under 5-2-11.3(b)(1)(A) or 5-2-11.3(b)(1)(B), it will not cause a significant lowering of water quality in the OSRW. It was determined that the new limits for total residual chlorine, silver and free cyanide do not cause a significant lowering of water quality in Portage-Burns Waterway under 5-2-11.3(b)(1)(B). Therefore, they do not cause a significant lowering of water quality in Lake Michigan.

The thermal effluent requirements in the current permit were also reviewed to determine if they are protective of water quality in Portage-Burns Waterway. The current permit was issued in 1990 and includes thermal effluent requirements for the combined effect of Outfalls 002, 003 and 004. The requirements are based on temperature criteria that applied prior to the 1990 change in water quality standards. Prior to 1990, Portage-Burns Waterway was considered a migration route for salmonids and additional temperature criteria protective of salmonids applied. The current permit includes temperature criteria for migration routes for those months where they are more stringent than criteria that apply to a warm water aquatic community.

Portage-Burns Waterway is now designated as a salmonid water and the temperature criteria in 2-1.5-8(d) for cold water fish apply. These criteria are more stringent than those for salmonid migration routes and include criteria for periods when salmonid spawning or imprinting occur. Based on discussions with the Department of Natural Resources, IDEM has defined the period of spawning and imprinting as September through May and the criteria are applied throughout the watershed as spawning and imprinting can occur at any place in the watershed. Therefore, the temperature limits in the current permit should be updated to include the more stringent of the temperature criteria for cold water fish in 2-1.5-8(d) or for a warm water aquatic community in 2-1.5-8(c)(4).

Compliance with the current thermal requirements is determined using a model developed by the facility in 1991 that calculates the temperature rise at the edge of the mixing zone for each outfall. A review of the model is included in the attached documentation. Based on the review, it is recommended that the current model no longer be considered sufficient to determine compliance with the temperature limits in the permit. The following recommendations are provided to assist in the development of a new means of determining the compliance of the discharges from Outfalls 002, 003 and 004 with the thermal requirements:

(1) If technically feasible, the best option is to install a temperature monitoring device in Portage-Burns Waterway at the edge of the mixing zone. Based on the IDEM policy of allowing one-half the stream for thermal mixing zones, an appropriate thermal mixing zone for Outfalls 002, 003 and 004 would extend along Portage-Burns Waterway from Outfall 002 to mid-stream and then downstream to a point at mid-stream and downstream of Outfall 004. The distance from Outfall 004 to the mouth of Portage-Burns Waterway is about 350 feet. Considering the width of Portage-Burns Waterway, a mid-stream point about 300 feet downstream of Outfall 004 could be considered the edge of the mixing zone. A temperature monitoring device would be installed at this point.

(2) The modeling of thermal mixing zones has advanced significantly since the current model was developed in 1991. The USGS installed a flow gage upstream of Outfall 002 in 1994 and long-term temperature data upstream of Outfall 002 and for the specific outfalls are available. In addition, instrumentation is available to monitor the dynamic flow regime in Portage-Burns Waterway to determine the frequency of reverse flows in the vicinity of the outfalls. Therefore, it should now be possible to do a more sophisticated analysis to determine the impact of Outfalls 002, 003 and 004 on the temperature of Portage-Burns Waterway and to develop a more refined model.

The documentation of the wasteload allocation analysis is included as an attachment.

TABLE 1
Calculation of Projected Effluent Quality Using Outfall 004 Data
For U.S. Steel - Midwest Plant Outfall 004 in Porter County
(IN0000337, WLA000062)

Parameter	Monthly Average PEQ					Daily Maximum PEQ				
	Maximum Monthly Average (mg/l)	Number of Monthly Averages	CV	Multiplying Factor	Monthly Average PEQ (mg/l)	Maximum Daily Sample (mg/l)	Number of Daily Samples	CV	Multiplying Factor	Daily Maximum PEQ (mg/l)
Antimony					0.012	0.0019	1	0.6	6.2	0.012
Arsenic III					0.015	0.0024	1	0.6	6.2	0.015
Barium					0.062	0.01	1	0.6	6.2	0.062
Beryllium					0.031	0.005	1	0.6	6.2	0.031
Cadmium	0.000055	1	0.6	6.2	0.00034	0.00023	4	0.6	2.6	0.0006
Chromium (VI)	0.00062	1	0.6	6.2	0.0038	0.00086	4	0.6	2.6	0.0022
Total Chromium	0.009	1	0.6	6.2	0.056	0.23	6	0.6	2.1	0.48
Cobalt					0.012	0.002	1	0.6	6.2	0.012
Copper	0.0014	1	0.6	6.2	0.0087	0.0017	4	0.6	2.6	0.0044
Lead	0.00024	1	0.6	6.2	0.0015	0.00026	4	0.6	2.6	0.00068
Manganese					0.62	0.1	1	0.6	6.2	0.62
Mercury	0.00000058	10	0.4	1.5	0.00000087	0.0000006	22	0.5	1.3	0.00000078
Molybdenum					0.062	0.01	1	0.6	6.2	0.062
Nickel	0.0027	1	0.6	6.2	0.017	0.13	6	0.6	2.1	0.27
Selenium	0.00027	1	0.6	6.2	0.0017	0.00038	4	0.6	2.6	0.00099
Silver	0.00005	1	0.6	6.2	0.00031	0.00005	3	0.6	3.0	0.00015
Thallium					0.0038	0.00062	1	0.6	6.2	0.0038
Tin					0.12	0.02	1	0.6	6.2	0.12
Titanium					0.062	0.01	1	0.6	6.2	0.062
Zinc	0.0062	1	0.6	6.2	0.038	0.075	6	0.6	2.1	0.16
Ethylbenzene					0.019	0.005	2	0.6	3.8	0.019
Naphthalene	0.0001	1	0.6	6.2	0.00062	0.00011	4	0.6	2.6	0.00029
Phenol					0.038	0.01	2	0.6	3.8	0.038
Tetrachloroethylene	0.00024	1	0.6	6.2	0.0015	0.00024	4	0.6	2.6	0.00062
Toluene					0.019	0.005	2	0.6	3.8	0.019
1,1,1-Trichloroethane					0.019	0.005	2	0.6	3.8	0.019
Boron					0.19	0.03	1	0.6	6.2	0.19
Cyanide, Free	0.0024	1	0.6	6.2	0.015	0.0033	4	0.6	2.6	0.0086
Cyanide, Total	0.0022	1	0.6	6.2	0.014	0.0022	4	0.6	2.6	0.0057
Total Ammonia (as N)										
Summer					0.23	0.061	2	0.6	3.8	0.23
Winter					0.23	0.061	2	0.6	3.8	0.23

6/8/2010

TABLE 2
Results of Reasonable Potential Statistical Procedure Using Outfall 004 Data
For U.S. Steel - Midwest Plant Outfall 004 in Porter County
(IN0000337, WLA000062)

Parameter	Monthly Average Comparison			Daily Maximum Comparison			WQBELs Required Based on 327 IAC 5-2-11.5(b)?
	Monthly Average PEQ (mg/l)	Monthly Average PEL (mg/l)	PEQ > PEL?	Daily Maximum PEQ (mg/l)	Daily Maximum PEL (mg/l)	PEQ > PEL?	
Antimony	0.012	0.099	No	0.012	0.20	No	No
Arsenic III	0.015	0.18	No	0.015	0.37	No	No
Barium	0.062	1.5	No	0.062	3.1	No	No
Beryllium	0.031	0.037	No	0.031	0.074	No	No
Cadmium	0.00034	0.0077	No	0.0006	0.013	No	No
Chromium (VI)	0.0038	0.014	No	0.0022	0.027	No	No
Total Chromium	0.056	0.26	No	0.48	0.51	No	No
Cobalt	0.012	0.023	No	0.012	0.047	No	No
Copper	0.0087	0.030	No	0.0044	0.052	No	No
Lead	0.0015	0.028	No	0.00068	0.055	No	No
Manganese	0.62	1.5	No	0.62	3.1	No	No
Mercury	0.00000087	0.0000013	No	0.00000078	0.0000032	No	No
Molybdenum	0.062	0.99	No	0.062	2.0	No	No
Nickel	0.017	0.15	No	0.27	0.30	No	No
Selenium	0.0017	0.0057	No	0.00099	0.012	No	No
Silver	0.00031	0.000076	Yes	0.00015	0.00013	Yes	Yes
Thallium	0.0038	0.0074	No	0.0038	0.015	No	No
Tin	0.12	0.17	No	0.12	0.34	No	No
Titanium	0.062	3.1	No	0.062	6.2	No	No
Zinc	0.038	0.27	No	0.16	0.55	No	No
Ethylbenzene	0.019	0.14	No	0.019	0.27	No	No
Naphthalene	0.00062	0.032	No	0.00029	0.065	No	No
Phenol	0.038	0.22	No	0.038	0.45	No	No
Tetrachloroethylene	0.0015	0.074	No	0.00062	0.15	No	No
Toluene	0.019	0.12	No	0.019	0.23	No	No
1,1,1-Trichloroethane	0.019	0.51	No	0.019	1.0	No	No
Boron	0.19	2.0	No	0.19	3.9	No	No
Cyanide, Free	0.015	0.0075	Yes	0.0086	0.013	No	Yes
Cyanide, Total	0.014	116	No	0.0057	281	No	No
Total Ammonia (as N)							
Summer	0.23	1.5	No	0.23	3.1	No	No
Winter	0.23	1.6	No	0.23	3.2	No	No

6/8/2010

TABLE 3
Calculation of Projected Effluent Quality Using Internal Outfall 104 Data
For U.S. Steel - Midwest Plant Outfall 004 in Porter County
(IN0000337, WLA000062)

Parameter	Monthly Average PEQ					Daily Maximum PEQ				
	Maximum Monthly Average (mg/l)	Number of Monthly Averages	CV	Multiplying Factor	Monthly Average PEQ (mg/l)	Maximum Daily Sample (mg/l)	Number of Daily Samples	CV	Multiplying Factor	Daily Maximum PEQ (mg/l)
Chloride	166	36	0.2	1.0	166	188	157	0.2	1.0	188
Sulfate	290	36	0.2	1.0	290	357	156	0.2	1.0	357
Fluoride	0.31	36	0.1	1.0	0.31	0.47	157	0.2	1.0	0.47

6/8/2010

TABLE 4
Results of Reasonable Potential Statistical Procedure Using Internal Outfall 104 Data
For U.S. Steel - Midwest Plant Outfall 004 in Porter County
(IN0000337, WLA000062)

Parameter	Monthly Average Comparison			Daily Maximum Comparison			WQBELs Required Based on 327 IAC 5-2-11.5(b)?
	Monthly Average PEQ (mg/l)	Monthly Average PEL (mg/l)	PEQ > PEL?	Daily Maximum PEQ (mg/l)	Daily Maximum PEL (mg/l)	PEQ > PEL?	
Chloride	166	257	No	188	516	No	No
Sulfate	290	514	No	357	1032	No	No
Fluoride	0.31	1.7	No	0.47	3.5	No	No

6/8/2010

TABLE 5
Water Quality-based Effluent Limitations
For U.S. Steel - Midwest Plant Outfall 002 in Porter County
(IN0000337, WLA000062)

Parameter	Quality or Concentration			Quantity or Loading*			Samples/Month
	Monthly Average	Daily Maximum	Units	Monthly Average	Daily Maximum	Units	
Chlorine (total residual)	0.01	0.02	mg/l	0.59	1.2	lbs/day	4

*Based on an effluent flow of 7.08 mgd.

6/8/2010

TABLE 6
Water Quality-based Effluent Limitations
For U.S. Steel - Midwest Plant Outfall 003 in Porter County
(IN0000337, WLA000062)

Parameter	Quality or Concentration			Quantity or Loading*			Samples/Month
	Monthly Average	Daily Maximum	Units	Monthly Average	Daily Maximum	Units	
Chlorine (total residual)	0.01	0.02	mg/l	1.6	3.1	lbs/day	4

*Based on an effluent flow of 18.7 mgd.

6/8/2010

TABLE 7
Water Quality-based Effluent Limitations
For U.S. Steel - Midwest Plant Outfall 004 in Porter County
(IN0000337, WLA000062)

Parameter	Quality or Concentration Monthly Average	Daily Maximum	Units	Quantity or Loading* Monthly Average	Daily Maximum	Units	Monthly Sampling Frequency
Cadmium	0.0077	0.013	mg/l	2.8	4.8	lbs/day	2
Chromium (VI)	0.014	0.027	mg/l	5.1	9.9	lbs/day	4
Total Chromium	0.26	0.51	mg/l	93	187	lbs/day	4
Copper	0.030	0.052	mg/l	11	19	lbs/day	2
Lead	0.028	0.055	mg/l	10	20	lbs/day	4
Nickel	0.15	0.30	mg/l	55	110	lbs/day	4
Silver	0.000076	0.00013	mg/l	0.028	0.048	lbs/day	2
Zinc	0.27	0.55	mg/l	99	201	lbs/day	4
Naphthalene	0.032	0.065	mg/l	12	24	lbs/day	4
Tetrachloroethylene	0.074	0.15	mg/l	27	55	lbs/day	4
Chlorine (total residual)	0.01	0.02	mg/l	3.7	7.3	lbs/day	4
Cyanide, Free	0.0075	0.013	mg/l	2.7	4.8	lbs/day	2
Cyanide, Total	116	281	mg/l	42401	102714	lbs/day	4
Whole Effluent Toxicity							
Acute		1.0	TUa				
Chronic	1.5		TUc				

*Based on an effluent flow of 43.8 mgd.

6/8/2010

Documentation of Wasteload Allocation Analysis For Discharges to the Great Lakes System

Analysis By: John Elliott *JE*
Date: June 8, 2010
WLA Number: 62

Facility Information

- **Name:** U.S. Steel - Midwest Plant (formerly National Steel, Midwest Division)
- **NPDES Permit Number:** IN0000337
- **Permit Expiration Date:** March 31, 1995
- **County:** Porter
- **Purpose of Analysis:** Permit Renewal

Outfall 001

- **Facility Operations:** stormwater runoff
- **Current Permitted Flow:** an average flow of 0.013 mgd is given in the permit Fact Sheet
- **Type of Treatment:** none
- **Effluent Flow:** The highest monthly average flow from October 2006 through September 2008 was 0.199 mgd and occurred during February 2007 (see Attachment 1). The February 10, 2009 permit application update lists an average flow of 0.27 mgd.

Outfall 002

- **Facility Operations:** stormwater runoff and noncontact cooling water for bearings
- **Current Permitted Flow:** an average flow of 2.3 mgd is given in the permit Fact Sheet
- **Type of Treatment:** none
- **Effluent Flow:** 7.08 mgd (The highest monthly average flow from October 2006 through September 2008 was 7.08 mgd and occurred during November 2006. The February 10, 2009 permit application update lists an average flow of 8.44 mgd.)

Outfall 003

- **Facility Operations:** stormwater runoff and noncontact cooling water for air, gas and oil coolers
- **Current Permitted Flow:** an average flow of 7.23 mgd is given in the permit Fact Sheet
- **Type of Treatment:** none
- **Effluent Flow:** 18.7 mgd (The highest monthly average flow from October 2006 through September 2008 was 18.7 mgd and occurred during January 2007. The February 10, 2009 permit application update lists an average flow of 29.8 mgd.)

- **Current Effluent Limits (Outfalls 001, 002 and 003):**

Pollutant	Monthly Average		Daily Maximum	
	(mg/l)	(lbs/day)	(mg/l)	(lbs/day)
Oil & Grease	Report	--	Report	--

Outfall 004

- **Facility Operations:** internal Outfall 104, noncontact cooling water for air, gas and oil coolers and stormwater runoff
- **Applicable Effluent Guidelines:** only those that apply to internal Outfall 104
- **Current Permitted Flow:** an average flow of 19.2 mgd is given in the permit Fact Sheet
- **Type of Treatment:** none besides the treatment for internal Outfall 104
- **Current Effluent Limits:** (In addition to the limits below, biomonitoring is required for this outfall. The acute toxicity reduction evaluation (TRE) trigger is an LC50 of less than 100% effluent and the chronic TRE trigger is an NOEL of less than 17.23% effluent.)

Pollutant	Monthly Average		Daily Maximum	
	(mg/l)	(lbs/day)	(mg/l)	(lbs/day)
Oil & Grease	Report	--	Report	--
TSS	Report	Report	Report	Report
BOD5	Report	Report	Report	Report

- **Effluent Flow for WLA Analysis:** 43.8 mgd (The highest monthly average flow from October 2006 through September 2008 was 43.8 mgd and occurred during August 2007. The monthly average flow from outfall 104 during this month was 8.49 mgd. The February 10, 2009 permit application update lists an average flow of 64.7 mgd.)

Internal Outfall 104

- **Facility Operations:** pickle lines, two cold reduction mills, annealing line, sheet temper mill, two cleaning lines, two tin temper mills, two preparation lines, two electroplating lines, two hot-dip coating lines, three shear lines and galvanizing
- **Applicable Effluent Guidelines:** 40 CFR Part 420 Iron and Steel Manufacturing Point Source Category for acid pickling, cold rolling, alkaline cleaning and hot coating operations and 40 CFR Part 433 Metal Finishing Point Source Category for tin and chromium electroplating operations. The pollutants covered include cadmium, total chromium, hexavalent chromium, copper, total cyanide, lead, nickel, silver, zinc, naphthalene and tetrachloroethylene.

- **Current Permitted Flow:** an average flow of 5.88 mgd is given in the permit Fact Sheet; it appears from the permit Fact Sheet that mass limits based on the Outfall 004 average flow of 19.2 mgd were calculated using water quality criteria and compared to existing mass limits and those based on effluent limitation guidelines; this resulted in the mass limits for lead and total cyanide being based on water quality criteria and an effluent flow of 19.2 mgd
- **Type of Treatment:** pretreatment (flow equalization, mixing and API oil separation), chrome treatment (chemical treatment and mixing) and final wastewater treatment (flow equalization, skimming, mixing, flocculation and sedimentation)
- **Current Effluent Limits:**

Pollutant	Monthly Average		Daily Maximum	
	(mg/l)	(lbs/day)	(mg/l)	(lbs/day)
TSS	--	1,147	--	2,290
Oil & Grease	--	--	--	765
Iron	Report	38	Report	138
Total Chromium	Report	10	Report	30
Zinc	Report	10	Report	30
Lead	Report	5.9	Report	13.73
Total Cyanide	Report	3.41	Report	7.95
Sulfate	Report	28,300	Report	60,000
Chloride	Report	Report	Report	Report
Fluoride	Report	150	Report	400
Hexavalent Chromium	Report	1.07	Report	2.31
BOD5	Report	Report	Report	Report
Naphthalene	--	--	Report	3.7
Tetrachloroethylene	--	--	Report	5.98
Total Residual Chlorine	Report	--	Report	--

- **Effluent Flow for WLA Analysis:** Not Applicable (The highest monthly average flow from October 2006 through September 2008 was 9.05 mgd and occurred during September 2008. The February 10, 2009 permit application update lists an average flow of 11.6 mgd.)

Outfalls 001, 002, 003 and 004

- **Type of Treatment:** A permit modification was issued May 23, 1991 to allow the use of water treatment additives to control zebra mussels.
- **Current Effluent Limits:**

Pollutant	Monthly Average		Daily Maximum	
	(mg/l)	(lbs/day)	(mg/l)	(lbs/day)
Total Residual Oxidants	--	--	0.05	--
Total Residual Chlorine	0.02	--	0.04	--

Pollutants of Concern for Outfalls 002 and 003

The pollutants of concern were identified by first considering the parameters included in the existing permit for Outfalls 002 and 003 and any individual chemicals added to the cooling water. Water treatment additives that are mixtures of chemicals are reviewed separate from this wasteload allocation report. The next step was to consider data reported on Form 2C and data reported as part of additional monitoring conducted for the permit renewal. Finally, any pollutants not monitored that have the potential to be present at elevated levels due to improper operation and maintenance of the cooling system (e.g. pollutants added from corrosion and erosion) were considered. The pollutants of concern are included in the table below.

Pollutants of Concern for WLA Analysis for Outfalls 002 and 003	
Pollutant	**Reason for Inclusion on Pollutants of Concern List**
Total residual chlorine	Limited in existing permit at Outfalls 002 and 003. The facility uses chlorine.
Aluminum, antimony, arsenic, barium, boron, total chromium, chloride, cobalt, copper, free cyanide, total cyanide, fluoride, iron, lead, manganese, molybdenum, nickel, selenium, silver, sulfate, thallium, tin, titanium, zinc and ammonia-N	Data available from Form 2C and or additional monitoring.

Pollutants of Concern for WLA Analysis for Outfall 004

The pollutants of concern were identified by first considering the parameters included in the existing permit for Outfall 004 and any individual chemicals added to the cooling water. Water treatment additives that are mixtures of chemicals are reviewed separate from this wasteload allocation report. The next step was to consider the parameters included in the Federal Effluent Limitation Guidelines that apply to internal Outfall 104 and the parameters included in the existing permit for internal Outfall 104. Next, the "Development Document for Final Effluent Limitations Guidelines and Standards for the Iron and Steel Manufacturing Point Source Category," April 2002, EPA-821-R-02-004, was reviewed to identify pollutants of concern for each applicable subcategory of the guidelines. Next, the "Development Document for Effluent Limitations Guidelines and Standards for the Metal Finishing Point Source Category," June 1983, EPA 440/1-83/091, was reviewed to identify pollutants of concern. Finally, data reported on Form 2C and data reported as part of additional monitoring conducted for the permit renewal were reviewed. The pollutants of concern are included in the table below.

Pollutants of Concern for WLA Analysis for Outfall 004	
Pollutant	**Reason for Inclusion on Pollutants of Concern List**
Total residual chlorine	Limited in existing permit at Outfall 004. The facility uses chlorine.
Cadmium, hexavalent chromium, total chromium, copper, total cyanide, lead, nickel, silver, zinc, naphthalene and tetrachloroethylene	Effluent Limitation Guidelines apply to internal Outfall 104.
Fluoride, iron and sulfate	Limited in existing permit at internal Outfall 104. Identified as pollutant of concern in Iron and Steel Development Document.
Chloride	Monitored in existing permit at internal Outfall 104.
Aluminum, antimony, arsenic, barium, boron, cobalt, manganese, molybdenum, selenium, tin, titanium, ammonia-N, bis(2-ethylhexyl)phthalate, ethylbenzene, phenol, toluene and 1,1,1-trichloroethane	Identified as pollutant of concern in Iron and Steel Development Document. Data available from Form 2C.
Beryllium, free cyanide, mercury and thallium	Identified as pollutant of concern in Metal Finishing Development Document. Data available from Form 2C and or additional monitoring.
Vanadium	Identified as pollutant of concern in Iron and Steel Development Document. Data not available from Form 2C or additional monitoring.
Whole effluent toxicity	Monitored (TRE triggers apply) in existing permit at Outfall 004.

Receiving Stream Information

- **Receiving Stream:** Outfalls 001, 002, 003 and 004 discharge to Portage-Burns Waterway about 0.7, 0.6, 0.4 and 0.06 miles upstream of the Indiana portion of the open waters of Lake Michigan, respectively (see Attachment 2)
- **Drainage Basin:** Lake Michigan
- **Public Water System Intakes Downstream:** None on Portage-Burns Waterway. There are several public water system intakes in Lake Michigan, but none will impact this analysis.
- **Designated Stream Use:** Portage-Burns Waterway is designated for full-body contact recreation and shall be capable of supporting a well-balanced, warm water aquatic community. Lake Michigan is designated for full-body contact recreation and shall be capable of supporting a well-balanced, warm water aquatic community. The East Branch of Little Calumet River and its tributaries downstream to Lake Michigan via Burns Ditch (Portage-Burns Waterway) are designated in 327 IAC 2-1.5-5(a)(3)(B) as salmonid waters and shall be capable of supporting a salmonid fishery. Therefore, Portage-Burns Waterway is designated as a salmonid water. The Indiana portion of the open waters of Lake Michigan is designated in 327 IAC 2-1.5-5(a)(3)(G) as a salmonid water and shall be capable of supporting a salmonid fishery. The Indiana portion of the open waters of Lake Michigan is designated in 327 IAC 2-1.5-19(b)(2) as an outstanding state resource water (OSRW). Discharges to tributaries of OSRWs are subject to the antidegradation implementation procedure for OSRWs in 327 IAC 5-2-11.7.
- **14 Digit HUC:** 04040001060040
- **Assessment Unit (2008):** INC0164_T1108
- **303(d) List (2008):** Portage-Burns Waterway (assessment unit INC0164_T1108) is on the 2008 303(d) list for PCBs in fish tissue. The Lake Michigan shoreline is on the 2008 303(d) list for mercury and PCBs in fish tissue.
- **TMDL Status:** A TMDL for *E. coli* for Portage-Burns Waterway (assessment unit INC0164_T1108) was approved by U.S. EPA January 28, 2005 and is part of the Little Calumet/Burns Ditch TMDL. The current U.S. Steel - Midwest permit includes the discharge of sanitary wastewater from Outfall 006. The TMDL notes that U.S. Steel - Midwest is planning to discharge their sanitary wastewater to the Portage WWTP. According to the U.S. Steel - Midwest May 2005 DMR, Outfall 006 was closed May 25, 2005. The TMDL requires load reductions from nonpoint sources, but not from point source discharges. With the elimination of the sanitary discharge, the TMDL does not require permit limits for *E. coli* on any of the U.S. Steel - Midwest outfalls. A TMDL for *E. coli* for the Lake Michigan shoreline was approved by U.S. EPA September 1, 2004 and is part of the Lake Michigan TMDL.
- **Q7,10 (Upstream of Facility):** 110 cfs (USGS gaging station 04095090 Burns Ditch at Portage is on Portage-Burns Waterway at the bridge downstream of Outfall 001 and upstream of Outfall 002. This station began operation 10-1-1994. Daily mean flow data approved by the USGS for this station are available from the USGS website for the period 10-1-1994 through 9-30-2007. The U.S. EPA has a program (DFLOW version 3.1) that calculates stream design flows using daily mean flow values. The program was downloaded from the U.S. EPA website and used to calculate the stream design flows using the approved daily mean flow data. The stream design flows are based on the climatic year (April 1 through

March 31). It should be noted that the Q7,10 calculated using the flow data is less than expected considering the flow contributions from the watershed (ArcelorMittal Burns Harbor, East Branch Little Calumet River and Salt Creek) upstream of the gage. The USGS was contacted about the reliability of flow data recorded at the gage. The hydrodynamics at the gage are complicated by backwater and reverse flows due to Lake Michigan. The gage consists of a water-stage recorder and an Acoustic Doppler velocity meter. The USGS is confident that the daily mean flows recorded at the gage are accurate to within plus or minus 10-15% and should not be biased low. Therefore, the data were used to calculate the stream design flows.)

- **Q1,10 (Upstream of Facility):** 88 cfs
- **Q90,10 (Upstream of Facility):** 186 cfs
- **Harmonic Mean Flow (Upstream of Facility):** 352 cfs
- **Nearby Dischargers:** There are several dischargers to tributaries of Portage-Burns Waterway upstream of this facility. The Chesterton WWTP (IN0022578), Praxair (IN0043435) and ArcelorMittal Burns Harbor (IN0000175) discharge to East Branch Little Calumet River. The Valparaiso WWTP (IN0024660) and South Haven WWTP (IN0030651) discharge to Salt Creek and a number of sanitary WWTPs discharge to tributaries of Salt Creek. The Portage WWTP (IN0024368) discharges to Burns Ditch. Only ArcelorMittal, Valparaiso and Portage currently have monitoring data available for metals. All of these dischargers contribute to the background concentrations upstream of U.S. Steel - Midwest. However, only the ArcelorMittal and Portage discharges were specifically considered in the WLA analysis because of the availability of data and the fact that they are relatively close to U.S. Steel - Midwest.

Calculation of Water Quality-based Effluent Limitations for Total Residual Chlorine

Total residual chlorine is a common pollutant of concern for Outfalls 002, 003 and 004. Noncontact cooling water is no longer discharged through Outfall 001 so it is no longer a pollutant of concern at Outfall 001. Outfalls 002 (7.08 mgd), 003 (18.7 mgd) and 004 (43.8 mgd) are located on the same side of Portage-Burns Waterway within a 0.5 mile segment. Because of the potential for overlapping mixing zones, these discharges were combined (total discharge of 69.58 mgd) in the calculation of water quality-based effluent limitations (WQBELs) for total residual chlorine. This was done in accordance with 5-2-11.4(b)(3)(D) which requires the combined effect of overlapping mixing zones to be evaluated to ensure that applicable criteria and values are met in the area where the mixing zones overlap. The background concentration of total residual chlorine was set equal to zero because instream data are not available and any contribution from upstream dischargers is not expected to result in measurable concentrations in the receiving stream.

The coefficient of variation used to calculate monthly average and daily maximum WQBELs was set equal to the default value of 0.6. The number of samples per month used to calculate monthly average WQBELs was set equal to 4 based on the expected monitoring frequency. The spreadsheet used to calculate WQBELs is included in Attachment 3.

Calculation of Preliminary Effluent Limitations for Outfall 004

The representative background concentration of a pollutant for use in developing wasteload allocations is determined in accordance with 327 IAC 5-2-11.4(a)(8). According to this provision, best professional judgment is to be used to select the one data set that most accurately reflects or estimates background concentrations when data in more than one of the following data sets exist:

(A) Acceptable available water column data.
(B) Water column concentrations estimated through use of acceptable available caged or resident fish tissue data.
(C) Water column concentrations estimated through use of acceptable available or projected pollutant loading data.

The background concentration is calculated as the geometric mean of the selected data set. In the case of U.S. Steel - Midwest, instream data are available from fixed water quality monitoring station BD 1 Burns Ditch at Portage. This station is located at the U.S. Highway 12 Bridge upstream of Outfall 001. Water quality data from fixed station BD 1 were obtained for the period January 2003 through December 2007. Instream data for all of the pollutants of concern are not available from fixed station BD 1 so data were obtained from nearby waterbodies. The Surveys Section conducted quarterly trace metals sampling in Deep River downstream of the Lake George Dam during the period from 2002 through 2006. The data from the trace metals sampling were used for several pollutants that are not monitored at the fixed station and for cadmium which was reported as nondetect at the fixed station. Water quality data were obtained from the Surveys Section database. The time periods chosen for the different data sets are based on the availability of data and the desire to have data for whole years. Data were limited to the last five years. IDEM sampling data were not available for boron, cobalt, molybdenum, tin and titanium so the background concentrations were determined using data for Lake Michigan reported by BP Products in their April 2002 permit renewal application. Based on 327 IAC 5-2-11.4(b)(1), a mixing zone is not allowed for BCCs so stream data were not required for mercury.

The background concentration of each pollutant based on instream data was determined by calculating the geometric mean of the instream data for the pollutant (327 IAC 5-2-11.4(a)(8)). In 327 IAC 5-2-11.4(a)(8) a procedure is included for calculating background concentrations when the data set includes values below the limit of detection. In this procedure, values in the data set below the limit of detection (LOD) are assigned the value (V) and then the geometric mean of the data set is calculated. The value (V) is determined as follows:

$$V = (LOD) \times [1 - (\text{Number of nondetects})/(\text{Total number of values})]$$

The fixed station data are actually reported as less than the limit of quantitation (LOQ). Therefore, a procedure based on best professional judgment was used for the fixed station data. If less than one-half the values in the data set were below the LOQ, the values below the LOQ were assigned the value (V) and then the geometric mean of the data set was calculated. The

value (V) was determined as follows:

$$V = (LOQ) \times [1 - (\text{Number below LOQ})/(\text{Total number of values})]$$

If one-half or more of the values in the data set were below the LOQ, the values below the LOQ were set equal to one-half the LOQ. The determination of background concentrations based on instream data is included in Attachments 4 through 10. The daily mean flow measured at USGS gaging station 04095090 Burns Ditch at Portage the day each sample at fixed station BD 1 was collected is included in Attachments 5-7 along with the pollutant concentration data.

Pollutant loading data for some pollutants of concern are available for the Portage WWTP and pollutant loading data for most of the pollutants of concern in this WLA analysis are available for ArcelorMittal Burns Harbor. However, considering the multiple sources of flow upstream of U.S. Steel - Midwest and the distance between the dischargers, it was decided that the instream data would more accurately reflect the background concentrations. However, the effluent concentrations available for ArcelorMittal and Portage were compared to the background concentrations calculated using the instream data to determine if the background concentration of any pollutant may potentially be underestimated, and if so, whether the potentially higher background concentration would significantly impact the preliminary effluent limitations and reasonable potential analysis. After reviewing the data for ArcelorMittal and Portage, the background concentrations calculated using the instream data were considered to be acceptable to calculate preliminary effluent limitations and do the reasonable potential analyses.

The background concentration of chromium (VI) was set equal to zero after consideration of the fixed station and trace metals sampling results for chromium (VI). The background concentration of free cyanide was set equal to zero after consideration of the sampling results for total cyanide at the fixed station and the trace metals sampling results for free cyanide. For the organic chemicals that are pollutants of concern, data from fixed station BD-1 are only available for naphthalene and total phenolics. The most recent data are from 2000. The data are included in Attachment 11. The data for total phenolics are from regular monthly fixed station monitoring and the data for naphthalene are from a special project. While the data are greater than five years old, effluent data for ArcelorMittal Burns Harbor show that it discharges detectable levels of naphthalene so the data were used in the analysis. The data for total phenolics were assumed to be representative of the background concentration of phenol. The background concentrations of the other organic chemicals were set equal to zero because stream data are not available and effluent data submitted with the ArcelorMittal Burns Harbor permit application show effluent concentrations <2 ug/l.

Outfalls 002 and 003 contribute noncontact cooling water and stormwater to Portage-Burns Waterway upstream of Outfall 004. A review of effluent data for these outfalls revealed that effluent concentrations are similar to or less than background concentrations (see Reasonable Potential Analysis for Outfall 002 and Outfall 003, below). Therefore, except for the calculation of WQBELs for total residual chlorine, it was decided to consider these flows in the

determination of stream design flows for the calculation of preliminary effluent limitations (PELs) for Outfall 004. The combined monthly average flows for Outfalls 002 and 003 are included in Attachment 12 for the last two years (October 2006 through September 2008). The last two years of approved daily mean flow data for the USGS gage are also included. The lowest combined flow occurred in November 2007. The effluent flows at Outfalls 002 and 003 are reported on a weekly basis. The flows reported each week in November and December were averaged with the flow from the prior week to calculate combined weekly average flows. The calculations are included in Attachment 12. The lowest weekly average flow was 30 cfs. A value of 30 cfs was added to the Q7,10, Q90,10 and harmonic mean flows. Since effluent flows are not reported on a daily basis, the combined Outfall 002 and 003 flow was not added to the Q1,10 value. The stream design flows for Outfall 004 are included below:

- **Q7,10 (Outfall 004):** 140 cfs
- **Q1,10 (Outfall 004):** 88 cfs
- **Q90,10 (Outfall 004):** 216 cfs
- **Harmonic Mean Flow (Outfall 004):** 382 cfs

According to 5-2-11.4(a)(13), the 50th percentile downstream hardness is to be used to determine the criteria for those metals whose criteria are dependent on hardness. There is no downstream fixed station so hardness data were obtained from fixed station BD 1. The 50th percentile hardness calculated using the last five years of data is 271 mg/l. The data are included in Attachment 13. According to 5-2-11.4(a)(13), the 75th percentile downstream temperature and pH are to be used to determine the ammonia-N criteria. Temperature and pH data were also obtained from fixed station BD 1. Using the last five years of data, the summer/winter 75th percentile pH values are 8.0/8.0 s.u. and the summer/winter 75th percentile temperatures are 24/8.2 °C. The data are included in Attachments 14 and 15.

In addition to the aquatic life, human health and wildlife criteria that apply to all waters within the Great Lakes system, there are criteria in 327 IAC 2-1.5-8(j) that apply specifically to Lake Michigan. For the pollutants of concern, Lake Michigan criteria apply to chloride, fluoride and sulfate. The criteria for chloride are the same as the aquatic life criteria that apply to Portage-Burns Waterway. The criteria for fluoride and sulfate are more stringent. In accordance with 327 IAC 5-2-11.4(a)(3), TMDLs, WLAs calculated in the absence of a TMDL, and preliminary WLAs must ensure attainment of applicable water quality standards including all numeric and narrative water quality criteria set forth in 327 IAC 2-1.5-8 and 327 IAC 2-1.5-16, and Tier I criteria and Tier II values established under 327 IAC 2-1.5-11 through 327 IAC 2-1.5-16. Therefore, to ensure that the concentrations of fluoride and sulfate in Portage-Burns Waterway meet the Lake Michigan criteria for these pollutants at the confluence of Portage-Burns Waterway with Lake Michigan, PELs were calculated using the Lake Michigan criteria and 100% dilution of effluent and receiving stream flow. These PELs were compared to the PELs based on the discharge meeting aquatic life, human health and wildlife criteria in Portage-Burns Waterway and the more stringent PELs were used as the applicable PELs.

The coefficient of variation used to calculate monthly average and daily maximum PELs was set equal to the default value of 0.6. The number of samples per month used to calculate monthly average PELs was based on the expected monitoring frequency. For mercury the number of samples per month was set equal to 1. For cadmium, copper, silver and free cyanide the number of samples per month was set equal to 2 and for the other pollutants the number of samples per month was set equal to 4. Aquatic life criteria or ambient screening values are currently not available for aluminum or iron so PELs could not be calculated for these pollutants of concern.

The spreadsheet used to calculate PELs is included in Attachment 16. Human health cancer criteria or values are available for bis(2-ethylhexyl) phthalate and tetrachloroethylene. However, effluent data submitted with the permit application show a concentration of <10 ug/l for bis(2-ethylhexyl) phthalate. Based on a conversation with staff at the Indiana State Department of Health laboratory, concentrations of bis(2-ethylhexyl) phthalate in the range of 10 to 20 ug/l could be the result of lab contamination. Considering the data submitted with the permit application, bis(2-ethylhexyl) phthalate will not be considered present in the discharge. Since the discharge only contains one substance with human health cancer criteria, the additivity provision under 327 IAC 5-2-11.4(a)(4)(A) will not have to be used to adjust any human health cancer wasteload allocations. Aquatic life screening values for sulfate in Attachment 16 are based on the sulfate criteria in 327 IAC 2-1-6(a)(5) using Lake Michigan hardness (140 mg/l) and chloride (15 mg/l) concentrations. The applicable PELs for fluoride and sulfate are based on Lake Michigan criteria. The PELs for tin and titanium were calculated using ambient screening values instead of actual water quality criteria. Therefore, they cannot be used as effluent limitations in an NPDES permit, but they can be used to screen the discharge for potential water quality impacts.

Reasonable Potential Analysis for Outfall 002 and Outfall 003

U.S. Steel - Midwest does not monitor Outfall 002 or Outfall 003 for toxic pollutants other than total residual chlorine. However, they did provide dry weather sampling data for Outfall 002 and Outfall 003 as part of their April 1999 revised permit renewal application. For the parameters not currently monitored or limited at Outfall 002 and Outfall 003, the data reported with the April 1999 revised permit renewal application are the same as the data reported with the September 1994 permit renewal application. The data are included in Attachment 17. They also conducted additional monitoring for the permit renewal in September 2001 and in April and May 2010. The data are included in Attachments 18-A and 18-B. Since these outfalls only consist of once-through noncontact cooling water and stormwater, a reasonable potential to exceed analysis was conducted under 327 IAC 5-2-11.5(g). The implementation of this provision must be in accordance with the following: "Revised Addendum to the National Pollutant Discharge Elimination System Memorandum of Agreement Between the State of Indiana and the United States Environmental Protection Agency Region 5 Concerning Indiana's Great Lakes Water Quality Standards and Implementation Procedures Rulemaking" signed in March 2006.

The provision in 5-2-11.5(g) may be used if the intake and outfall points for the noncontact cooling water are located on the same body of water and the discharge consists solely of once-through noncontact cooling water. Under 5-2-11.5(g)(6), if a wastestream consisting solely of

noncontact cooling water combines with a wastestream consisting of stormwater, this provision may still be applied to the wastestream consisting solely of noncontact cooling water if, for the wastestream composed entirely of stormwater, permit conditions that the commissioner determines to be necessary to protect the water quality of the receiving waterbody are imposed. The requirements imposed shall be as if the stormwater wastestream discharged directly into the receiving waterbody and shall be consistent with requirements imposed on other similar stormwater discharges to the waterbody. It is assumed that the stormwater discharges to Outfalls 002 and 003 will be regulated as if they discharged directly to Portage-Burns Waterway and will receive requirements consistent with other stormwater discharges.

In accordance with 327 IAC 5-2-11.5(b)(4)(B)(iv), an intake pollutant shall be considered to be from the same body of water as the discharge if the intake point is located on Lake Michigan and the outfall point is located on a tributary of Lake Michigan and the following conditions are met:

(A) The representative background concentration of the pollutant in the receiving water, as determined under 327 IAC 5-2-11.4(a)(8) (excluding any amount of the pollutant in the facility's discharge) is similar to or greater than that in the intake water.
(B) Any difference in a water quality characteristic (such as temperature, pH, and hardness) between the intake and receiving waters does not result in an adverse impact on the receiving water.

The facility reported intake data in addition to effluent data with their permit renewal application and the data are included in Attachments 17, 18-A and 18-B. Lake Michigan data are also available from IDEM fixed water quality monitoring stations. The representative background concentration in Portage-Burns Waterway upstream of the facility was determined above (see Calculation of Preliminary Effluent Limitations for Outfall 004). A review of the background and intake concentrations for each pollutant of concern shows that the background concentration is similar to or greater than the intake concentration. The data for free cyanide for Outfalls 002 and 003 were greater than the data for total cyanide. Since free cyanide is a subset of total cyanide, the free cyanide samples are not considered valid. While the hardness of the intake water (140 mg/l at fixed station LM OD Lake Michigan at Ogden Dunes; see Attachment 13) is less than that in Portage-Burns Waterway (271 mg/l; see Attachment 13), it is not expected to result in an adverse impact on the receiving stream. Therefore, Portage-Burns Waterway and Lake Michigan may be considered the same body of water for purposes of implementing the reasonable potential provision in 5-2-11.5(g).

A comparison of the intake data to the Outfall 002 and 003 data in Attachments 17, 18-A and 18-B shows that the concentrations of the pollutants of concern in Outfalls 002 and 003 are similar to the concentrations in the intake water. Therefore, the use of the intake water as noncontact cooling water is not resulting in elevated levels of the pollutants of concern in the discharges through Outfalls 002 and 003. Therefore, based on the provision in 5-2-11.5(g), the pollutants of concern for which Outfall 002 and 003 data are available in Attachments 17, 18-A and 18-B do not show reasonable potential to exceed.

Reasonable Potential Analysis for Outfall 004

Calculation of Projected Effluent Quality

U.S. Steel - Midwest does not monitor Outfall 004 for toxic pollutants other than total residual chlorine. However, they did provide data for Outfall 004 as part of their April 1999 revised permit renewal application. For the parameters not currently monitored or limited at Outfall 004, the data reported with the April 1999 revised permit renewal application are the same as the data reported with the September 1994 permit renewal application. The data are included in Attachment 17. They conducted additional monitoring for the permit renewal in September 2001. The data are included in Attachment 18-A. At the request of IDEM, they conducted additional monitoring in 2008 and submitted data for all pollutants requested except vanadium. The facility continued to monitor for mercury in 2009 and 2010. The data for internal Outfall 104 are included in Attachment 19 and the data for Outfall 004 are included in Attachments 20-A and 20-B. Outfall 004 consists of treated wastewater from internal Outfall 104, noncontact cooling water and stormwater. The facility currently monitors internal Outfall 104 for hexavalent chromium, total chromium, total cyanide, lead, zinc, chloride, fluoride, sulfate, naphthalene and tetrachloroethylene. Considering the other sources of flow to Outfall 004, the concentrations of these pollutants at internal Outfall 104 are expected to be higher than at Outfall 004. Therefore, in addition to the data included as part of the permit renewal application, data collected at internal Outfall 104 for the period October 2005 through September 2008 were used in a separate, conservative test of reasonable potential at Outfall 004.

Data collected for total cyanide at internal Outfall 104 were also used to calculate PEQs for free cyanide. These were compared to the PELs for free cyanide as a conservative test of reasonable potential for free cyanide. The data for internal Outfall 104 were obtained from the monthly monitoring report (MMR) for each month. The data for total chromium, total cyanide and zinc are not included in this report due to the large number of samples. The data for the other pollutants are included in Attachments 21 through 23. The sulfate data in Attachment 22 are net values. The maximum monthly average and maximum daily value both occurred in December 2005. The facility monitors sulfate in the intake water and reports internal Outfall 104 sulfate values as net values after subtracting the intake concentration. The monthly average intake concentration was 24 mg/l and the daily maximum intake concentration was 26 mg/l in December 2005. These values were added to the maximum monthly average and maximum daily values in Attachment 22 to obtain maximum monthly average and maximum daily values for use in calculating PEQs.

The effluent data used in the reasonable potential analysis include values reported as less than (<) the LOD. There is no procedure in the rules for handling effluent data reported as less than the LOD. As a conservative first test of reasonable potential, they are typically set equal to the LOD. Therefore, values reported as less than (<) the LOD were assigned the reported less than value. Monthly averages were calculated for those months for which at least two data points were available. For those pollutants of concern monitored in 2008 at the request of IDEM, the data from 1994 and 2001 were only used in addition to the 2008 data to calculate PEQs if at least one

of the 1994 or 2001 values was reported as greater than the LOD.

Comparison of PEQs to PELs

The reasonable potential analysis using the Outfall 004 data reported as part of the permit renewal application is included in Attachment 24. The results show that a PEQ exceeds a PEL for silver, free cyanide, chloride, fluoride and sulfate. The reasonable potential analysis using the internal Outfall 104 data is included in Attachment 25. The results show that a PEQ exceeds a PEL for lead and free cyanide. Further analysis for each of these pollutants of concern is included below:

Lead: For Outfall 004, one sample (<20 ug/l) was reported with the permit renewal application and four samples (maximum of 0.26 ug/l) were reported as part of the 2008 additional sampling. In the reasonable potential analysis using Outfall 004 data, the monthly average PEQ was less than the monthly average PEL and the daily maximum PEQ was less than the daily maximum PEL. For internal Outfall 104, all the samples obtained from MMRs were less than the LOD of 30 ug/l. This value is greater than the monthly average PEL of 28 ug/l. Therefore, in the reasonable potential analysis using internal Outfall 104 data, the monthly average PEQ exceeded the monthly average PEL based on a high LOD. Since the monthly average PEQ is based on non-quantifiable values greater than the monthly average PEL, the reasonable potential analysis using limited Outfall 004 data is based on more representative data and it can be concluded that there is no reasonable potential to exceed for lead at Outfall 004. The reasonable potential analysis using internal Outfall 104 data simply shows that the daily values are consistently less than 30 ug/l which is close to the monthly average PEL for lead of 28 ug/l.

Silver: For Outfall 004, three samples (maximum of <0.05 ug/l) less than the PEL were reported as part of the 2008 additional sampling. The monthly average PEQ is 0.31 ug/l and the monthly average PEL is 0.075 ug/l. The daily maximum PEQ is 0.15 ug/l and the daily maximum PEL is 0.13 ng/l. Therefore, reasonable potential is based on the reasonable potential multiplying factor used to calculate the monthly average and daily maximum PEQs.

Free Cyanide: For Outfall 004, one sample (<2 ug/l) was reported as part of the 2001 additional sampling and four samples (maximum of 3.3 ug/l) were reported as part of the 2008 additional sampling. In the reasonable potential analysis using Outfall 004 data, the monthly average PEQ is 15 ug/l and the monthly average PEL is 6.4 ug/l. The daily maximum PEQ is 8.6 ug/l and the daily maximum PEL is 13 ug/l. The monthly average PEQ exceeded the monthly average PEL based on the reasonable potential multiplying factor used to calculate the monthly average PEQ. The maximum value is also less than the limit of quantitation (LOQ). For the reasonable potential analysis using internal Outfall 104 data, the monthly average PEQ exceeded the monthly average PEL and the daily maximum PEQ exceeded the daily maximum PEL. Since the PEQs for free cyanide for internal Outfall 104 are based on data for total cyanide, no conclusion can be made concerning reasonable potential for free cyanide using internal Outfall 104 data. However, there is reasonable potential to exceed for free cyanide based on the analysis using Outfall 004 data.

Chloride: For Outfall 004, one sample (55 mg/l) was reported as part of the 2001 additional sampling and four samples (maximum of 89 mg/l) were reported as part of the 2008 additional sampling. In the reasonable potential analysis using Outfall 004 data, the monthly average PEQ is 508 mg/l and the monthly average PEL is 257 mg/l. The daily maximum PEQ is 205 mg/l and the daily maximum PEL is 516 mg/l. The monthly average PEQ exceeded the monthly average PEL based on the reasonable potential multiplying factor used to calculate the monthly average PEQ. In the reasonable potential analysis using internal Outfall 104 data, a PEQ did not exceed a PEL. A comparison of the data for chloride at internal Outfall 104 (Attachment 19) to that at Outfall 004 (Attachment 20-A) shows that the cooling water added to Outfall 004 dilutes the higher pollutant concentrations at internal Outfall 104. This shows that the reasonable potential analysis using internal Outfall 104 data is a conservative analysis and can be considered to be based on more representative data due to the limited data available for Outfall 004. Therefore, it can be concluded that there is no reasonable potential to exceed for chloride at Outfall 004.

Fluoride: For Outfall 004, one sample (930 ug/l) was reported with the permit renewal application and one sample (320 ug/l) was reported as part of the 2001 additional sampling. Four samples (maximum of 500 ug/l) were reported as part of the 2008 additional sampling. In the reasonable potential analysis using Outfall 004 data, the monthly average PEQ is 2500 ug/l and the monthly average PEL is 1700 ug/l. The daily maximum PEQ is 2000 ug/l and the daily maximum PEL is 3500 ug/l. The monthly average PEQ exceeded the monthly average PEL based on the reasonable potential multiplying factor used to calculate the monthly average PEQ. In the reasonable potential analysis using internal Outfall 104 data, a PEQ did not exceed a PEL. A comparison of the data for fluoride at internal Outfall 104 (Attachment 19) to that at Outfall 004 (Attachment 20-A) shows that the cooling water added to Outfall 004 dilutes the higher pollutant concentrations at internal Outfall 104. This shows that the reasonable potential analysis using internal Outfall 104 data is a conservative analysis and can be considered to be based on more representative data due to the limited data available for Outfall 004. It should be noted that the 2008 Outfall 004 and internal Outfall 104 data for fluoride were obtained using an analytical method with an LOQ of 500 ug/l and the MMR data for internal Outfall 104 were obtained using an analytical method with an LOQ of 250 ug/l. Therefore, it can be concluded that there is no reasonable potential to exceed for fluoride at Outfall 004.

Sulfate: For Outfall 004, one sample (89 mg/l) was reported with the permit renewal application and four samples (maximum of 150 mg/l) were reported as part of the 2008 additional sampling. In the reasonable potential analysis using Outfall 004 data, the monthly average PEQ is 887 mg/l and the monthly average PEL is 514 mg/l. The daily maximum PEQ is 345 mg/l and the daily maximum PEL is 1032 mg/l. The monthly average PEQ exceeded the monthly average PEL based on the reasonable potential multiplying factor used to calculate the monthly average PEQ. A comparison of the data for sulfate at internal Outfall 104 (Attachment 19) to that at Outfall 004 (Attachment 20-A) shows that the cooling water added to Outfall 004 dilutes the higher pollutant concentrations at internal Outfall 104. This shows that the reasonable potential analysis using internal Outfall 104 data is a conservative analysis and can be considered to be based on more representative data due to the limited data available for Outfall 004. Therefore, it can be

concluded that there is no reasonable potential to exceed for sulfate at Outfall 004.

Conclusion
Even though reasonable potential for silver and free cyanide are based on limited data sets, WQBELs are still required. However, it is recommended that the facility be allowed to request a review of reasonable potential after more data are collected. The data should be collected at a minimum frequency of two times per month and for a minimum duration of ten months. This will allow monthly averages and a coefficient of variation to be calculated. It should be noted that WQBELs for silver will be required, regardless of the reasonable potential statistical procedure, if the mass-based WQBELs at Outfall 004 are more stringent than the technology-based limits for silver that apply to internal Outfall 104.

Reasonable Potential Analysis for Total Residual Chlorine

In addition to establishing WQBELs based on the reasonable potential statistical procedure, IDEM is also required to establish WQBELs under 5-2-11.5(a) "If the commissioner determines that a pollutant or pollutant parameter (either conventional, nonconventional, a toxic substance, or whole effluent toxicity (WET)) is or may be discharged into the Great Lakes system at a level that will cause, have the reasonable potential to cause, or contribute to an excursion above any applicable narrative criterion or numeric water quality criterion or value under 327 IAC 2-1.5." Chlorine is added to the intake water for zebra mussel control at concentrations exceeding water quality criteria. Therefore, chlorine may be discharged at a level that will cause an excursion above the numeric water quality criterion for total residual chlorine under 2-1.5 and WQBELs for total residual chlorine are required at outfalls receiving noncontact cooling water. Outfalls 002, 003 and 004 receive noncontact cooling water so WQBELs for total residual chlorine are required at these outfalls.

Reasonable Potential Analysis for WET for Outfall 004
U.S. EPA disapproved the reasonable potential procedure for whole effluent toxicity at 327 IAC 5-2-11.5(c)(1). In place of 5-2-11.5(c)(1), IDEM is required to apply Paragraphs C.1 and D of Procedure 6 in Appendix F of 40 CFR Part 132. The following analysis is based on Paragraphs C.1 and D of Procedure 6 in Appendix F of 40 CFR Part 132.

Effluent Data
U.S. Steel - Midwest is required to monitor for acute and chronic WET using *Ceriodaphnia dubia* and Fathead Minnow two times per year. The samples have typically been collected in May and November. Effluent data for WET for the period May 2003 through November 2008 are included in Attachment 26. Chronic toxicity was calculated using the NOEC values because the IC_{25} values were not reported.

Reasonable Potential Analysis for Acute WET
The WET of an effluent is or may be discharged at a level that will cause, have the reasonable potential to cause, or contribute to an excursion above the numeric interpretation of the narrative criterion for acute WET at 2-1.5-8(b)(1)(E)(ii) when effluent specific WET data demonstrates that:

(TUa effluent) x (B) x (effluent flow)/(Qad + effluent flow) > AC

where,

TUa effluent = maximum acute WET result
B = multiplying factor from 5-2-11.5(h)
effluent flow = effluent flow used to calculate WQBELs for individual pollutants
Qad = amount of receiving water available for dilution
AC = numeric interpretation of the narrative criterion for acute WET

For U.S. Steel - Midwest, the following apply:

TUa effluent = <1.0 TUa (*Ceriodaphnia dubia* and Fathead Minnow)
B = 1.0 (based on 12 samples and a CV of 0.0)
effluent flow = 43.8 mgd
Qad = 0.0 mgd (an alternate mixing zone has not been approved for acute WET)
AC = 1.0 TUa (the applicable numeric interpretation of the narrative criterion for acute WET for the case where an alternate mixing zone for acute WET has not been approved)

(<1.0 TUa) x (1.0) x (43.8 mgd)/(0.0 mgd + 43.8 mgd) = <1.0 TUa

It cannot be demonstrated that the calculated value is greater than 1.0 TUa, so there is no reasonable potential for acute WET.

Reasonable Potential Analysis for Chronic WET
The WET of an effluent is or may be discharged at a level that will cause, have the reasonable potential to cause, or contribute to an excursion above the numeric interpretation of the narrative criterion for chronic WET at 2-1.5-8(b)(2)(A)(iv) when effluent specific WET data demonstrates that:

(TUc effluent) x (B) x (effluent flow)/(Qad + effluent flow) > CC

where,

TUc effluent = maximum chronic WET result
B = multiplying factor from 5-2-11.5(h)
effluent flow = effluent flow used to calculate WQBELs for individual pollutants

Qad = amount of receiving water available for dilution
CC = numeric interpretation of the narrative criterion for chronic WET

For U.S. Steel - Midwest, the following apply:

TUc effluent = 5.8 TUc (Fathead Minnow)
B = 2.0 (based on 12 samples and a CV of 0.9)
effluent flow = 43.8 mgd
Qad = 22.5 mgd (25% of the Q7,10 (90 mgd))
CC = 1.0 TUc

(5.8 TUc) x (2.0) x (43.8 mgd)/(22.5 mgd + 43.8 mgd) = 7.7 TUc

Since the calculated value is greater than 1.0 TUc, there is reasonable potential for chronic WET.

Antidegradation Analysis for High Quality Waters for Non-BCCs

New mass limits for total residual chlorine are required at Outfalls 002, 003 and 004. Since the discharges from all three outfalls were combined in the calculation of PELs, the discharges were also combined in the antidegradation analysis. New mass and concentration limits for silver and free cyanide are also required at Outfall 004. Significant lowering determinations for total residual chlorine, silver and free cyanide were made under 327 IAC 5-2-11.3(b)(1)(B).

High Quality Water Determination

High Quality Water Determination		
Pollutant	**High Quality Water? (Yes/No)**	**Rationale for Determination**
Total residual chlorine, silver and free cyanide	Yes	There are no data available to determine the quality of Portage-Burns Waterway for total residual chlorine, silver or free cyanide. Therefore, Portage-Burns Waterway will be considered a high quality water for total residual chlorine, silver and free cyanide.

Significant Lowering Determination for Total Residual Chlorine

Existing Effluent Flow: 69.58 mgd (Combined Outfalls 002, 003 and 004)

- **Results:** The results of the significant lowering determination are included in Attachment 27 and they show that the WQBELs for total residual chlorine do not cause a significant lowering of water quality for total residual chlorine under 327 IAC 5-2-11.3(b)(1)(B). Therefore, an antidegradation demonstration is not required for total residual chlorine.

Significant Lowering Determination for Silver and Free Cyanide

Existing Effluent Flow: 43.8 mgd (Outfall 004)

Results: The results of the significant lowering determination are included in Attachment 28. Effluent limits are not included in the current permit for silver or free cyanide so the existing effluent quality for these pollutants was used in the significant lowering determination. The existing effluent quality was set equal to the monthly average PEQ. The results show that the WQBELs for silver and free cyanide do not cause a significant lowering of water quality for silver or free cyanide under 327 IAC 5-2-11.3(b)(1)(B). Therefore, an antidegradation demonstration is not required for silver or free cyanide.

Antidegradation Analysis for OSRWs

According to 327 IAC 5-2-11.7(a)(2), for a new or increased discharge of a pollutant or pollutant parameter from a new or existing Great Lakes discharger into a tributary of an OSRW for which a new or increased permit limit would be required, the following apply:

(1) 5-2-11.3(a) and 5-2-11.3(b) apply to the new or increased discharge; and
(2) the discharge shall not cause a significant lowering of water quality in the OSRW.

According to nonrule policy document Water-002-NPD, "Antidegradation Requirements for Outstanding State Resource Waters Inside the Great Lakes Basin," a new or increased discharge into a tributary of Lake Michigan will not cause a significant lowering of water quality in Lake Michigan if any of the following are met:

(1) The new or increased discharge into a tributary of Lake Michigan is the result of an activity that will result in a significant overall environmental benefit to Lake Michigan.
(2) The new or increased discharge into a tributary of Lake Michigan does not cause a significant lowering of water quality in the tributary, as determined under 327 IAC 5-2-11.3(b)(1)(A) or 327 IAC 5-2-11.3(b)(1)(B).
(3) For non-bioaccumulative chemicals of concern, the new or increased discharge into a tributary of Lake Michigan uses less than 10% of the unused loading capacity of Lake Michigan. For the purposes of this provision:
    (A) "Unused loading capacity" means that amount of the total loading capacity not utilized by point source and nonpoint source discharges.
    (B) "Total loading capacity" means the product of the applicable water quality criterion times the sum of the following:
        (i) The flow in the tributary at the point it enters into Lake Michigan; and
        (ii) An equal volume of Lake Michigan water.
    (C) The unused loading capacity and total loading capacity will be established at the time that the request to lower the water quality is proposed. The stream flows used in the calculations will be the applicable stream design flows for the particular criteria.

New mass limits for total residual chlorine were calculated for Outfalls 002, 003 and 004. New mass and concentration limits for silver and free cyanide were also calculated for Outfall 004. The new limits for total residual chlorine, silver and free cyanide do not cause a significant lowering of water quality for total residual chlorine, silver or free cyanide in Portage-Burns Waterway under 5-2-11.3(b)(1)(B). Therefore, condition (2) is met and the new limits for total residual chlorine, silver and free cyanide do not cause a significant lowering of water quality in Lake Michigan.

Thermal Requirements

The current permit issued in 1990 includes thermal effluent requirements for the combined effect of Outfalls 002, 003 and 004. The requirements are based on temperature criteria that applied prior to the 1990 change in water quality standards. Prior to 1990, Portage-Burns Waterway was considered a migration route for salmonids and the following temperature criteria, in addition to those that apply to a warm water aquatic community, applied outside of the mixing zone.

(1) The maximum temperature rise at any time or place above natural shall not exceed 2 °F.
(2) The temperature shall not exceed 70 °F at any time or place during periods of migration nor exceed 85 °F at any time.

These criteria were incorporated in the thermal requirements along with the temperature criteria for a warm water aquatic community when they are more stringent than those for salmonids. Due to the presence of ArcelorMittal Burns Harbor (formerly Bethlehem Steel), which has a 316(a) thermal variance, upstream of the facility, only the 2 °F maximum temperature rise requirement had to be met when the upstream temperature equaled or exceeded the maximum limitation for the day. The actual periods of salmonid migration were not specifically listed in the permit.

The facility was originally required to select a downstream temperature sampling site at the edge of the mixing zone to measure compliance with the thermal requirements. The requirements for determining mixing zones in the regulations prior to 1990 were to be considered in determining the location. Those requirements are the same as the current ones in 327 IAC 2-1-4 for the non-Great Lakes system which state that the mixing zone should be limited to no more than 25% of the cross-sectional area and/or volume of flow of the stream, leaving at least 75% free as a zone of passage for aquatic biota nor should it extend over one-half of the width of the stream. Due to nautical traffic in Portage-Burns Waterway, the facility was allowed to develop a mathematical model for determining mixed river temperature. The model was to consider upstream flow and temperature and effluent flow and temperature.

In January 1991 the facility submitted to IDEM the mathematical model they planned to use to show compliance with their thermal requirements. The model was developed by ERM-North Central, Inc., St. Charles, Missouri. The model was one that simulates buoyant surface jets and

was developed prior to the completion of CORMIX 3 which IDEM would currently use to evaluate buoyant surface discharges. In developing the model, the consultant relied on the work of the principle developer of CORMIX 3. That work is included in the paper "Buoyant Surface Jets" by Gerhard H. Jirka, E. Eric Adams and Keith D. Stolzenbach published in "ASCE Journal of the Hydraulics Division," November 1981. The underlying model is a jet integral model for a buoyant surface jet discharging into a stagnant receiving water of large horizontal and vertical extent. According to the paper, the jet integral model is a good predictor of the details of the mixing process provided certain phenomena are accounted for and these phenomena relate mainly to the following three factors: the jet like behavior ceases after a transition distance; shallow receiving water causes bottom attachment; and, strong crosscurrents cause shoreline attachment downstream of the discharge.

Considering that the discharge is to a flowing channel of limited vertical extent, it was necessary to account for these three factors. The model developed by ERM included equations to calculate the following: the transition distance which is the distance from the discharge point where the jet-like near field region transitions into the density-driven far field region; the maximum jet depth which is the maximum depth at which excess jet buoyancy or temperature becomes negligible; the shallow water reduction factor which accounts for the effect of shallow water in limiting the vertical entrainment contribution; and, the stable centerline dilution factor which occurs at the end of the transition distance.

ERM defined the edge of the mixing zone as the lateral edge of the surface jet where excess velocity approaches zero. ERM stated that this point is roughly defined as the distance from the jet centerline to a point where the temperature rise is half of the centerline value. The temperature rise at the edge of the mixing zone was then estimated as half of the stable centerline temperature rise calculated by a heat balance utilizing the stable centerline dilution factor, effluent temperature and receiving stream temperature.

To account for shoreline attachment, ERM included an equation to check for shoreline attachment from the "Buoyant Surface Jets" paper. Shoreline attachment causes recirculation within the jet which reduces dilution. To account for the reduced dilution, ERM used the equation for predicting the maximum temperature rise downstream of the outfall for a shoreline attached buoyant surface jet in the paper "Design Criteria for Cooling-Water Outlet Structures" by Michael Schatzmann and Eduard Naudascher published in "ASCE Journal of the Hydraulics Division," March 1980. Whereas the temperature rise is determined at the end of the transition distance for the non-shoreline attached jet, ERM determined the maximum temperature rise at the outfall for the shoreline attached jet. ERM ran several simulations at varying river and effluent conditions and determined the ratio of the temperature rise at the edge of the mixing zone for the non-attached jet to the temperature rise at the outfall for the shoreline attached jet. The average ratio was used as a standard correction factor. If the shoreline attachment equation shows that the discharge is shoreline attached, the temperature rise at the edge of the mixing zone calculated for a non-attached jet is multiplied by the correction factor to obtain the temperature rise at the edge of the mixing zone for the shoreline attached jet.

The calculations in the ERM report are incorporated in an Excel spreadsheet that is used to determine compliance with the thermal requirements in the permit. Outfalls 002, 003 and 004 are each modeled separately using the temperature upstream of Outfall 002 as the upstream temperature for each outfall. The model output is the temperature at the edge of the mixing zone and the temperature rise at the edge of the mixing zone for each outfall. In May 1998 the facility submitted a request to modify the spreadsheet used to do the calculations. The facility had contracted the Advent Group to compare the spreadsheet equations to the methodology in the ERM report to verify accuracy and completeness. The Advent Group suggested some modifications to the spreadsheet to better conform to the methodology in the report.

After reviewing the documentation for the model and the spreadsheet used to do the calculations, the following concerns are noted:

(1) The transition distance is not bounded so the model can predict the stable centerline dilution to a distance well beyond the width of the waterway. The mixing zone rules that were applied when the permit was issued limited mixing zones to one-half the width of the stream. The Great Lakes rules that are now in effect do not specify the mixing zone for thermal discharges, but IDEM currently limits the mixing zone for thermal discharges to one-half the width of the stream to allow for a zone of passage.
(2) Instead of using the centerline dilution to calculate the temperature rise, the temperature rise was determined at the distance from the jet centerline where the temperature rise is half of the centerline value. Elevated temperature forms a barrier in the stream to fish, so having a transition distance that exceeds the width of the stream in conjunction with elevated temperatures that extend beyond the centerline can form a sizable barrier.
(3) The thermal limitations in the current permit were designed to limit the cumulative impact of the thermal discharges from Outfalls 002, 003 and 004. The model considers each outfall separately. While the outfalls are some distance apart, the temperature upstream of Outfall 004 would still be expected to be influenced by Outfalls 002 and 003.
(4) The model considered a stream velocity of 0.5 ft/sec and depth of 8 feet. At a channel width of 200 feet, the resulting stream flow is 800 cfs (noted below as "flow in ERM report") which is much larger than the Q7,10 (110 cfs) and harmonic mean (352 cfs) flows.
(5) The shoreline attached correction factor is not well documented, but results in a substantial reduction in the dilution. For outfalls 002 and 003, the correction factor is not applied for discharge flows around 9 mgd or greater. For Outfall 004 the correction factor is not applied for discharge flows around 80 mgd or greater. Based on the current discharge flows, the correction factor is only applied to Outfalls 002 and 004.

To illustrate these concerns, the model was run using the data from the September 2008 MMR. A comparison of the available dilution factor (the sum of the potential upstream flow allowed for mixing and the effluent flow divided by the effluent flow) at three stream flows (Q7,10, harmonic mean and flow in ERM report) to the modeled dilution factor is included for Outfalls 002, 003 and 004 in Attachments 29 through 31. The modeled transition distance is also included in these attachments. The difference between the available and modeled dilution factors

is greatest for Outfall 003 for which the shoreline correction factor is not applied at the current discharge flow. A comparison of temperature rise (Delta T) at the edge of the mixing zone (set equal to 50% of the stream flow) to the modeled Delta T for Outfalls 002, 003 and 004 is included in Attachments 32 through 34. The comparison in Attachment 34 shows that the discharge from Outfall 004 has the greatest potential to cause instream exceedances of the 2 °F Delta T portion of the temperature criteria for cold water fish. Whereas the model gave a 2.4 °F Delta T, the Delta T calculated using a 50% mixing zone was 7.4 °F at the Q7,10 flow and 3.1 °F at the harmonic mean flow. It should be noted that the modeled transition distance and dilution factor are highly dependent on the temperature difference between the upstream temperature and the effluent temperature. The transition distance and dilution factor both increase with decreasing temperature difference. Temperature differences throughout the year can be higher or lower than shown in the example. At lower temperature differences, the modeled transition distance and dilution factor are even larger than shown in the attachments.

In the 1990 water quality standards, Portage-Burns Waterway was no longer specifically listed as a migration route for salmonids, but it was designated as a salmonid water and subject to specific water quality criteria for cold water fish. In the 1997 Great Lakes rulemaking, Portage-Burns Waterway was designated in 327 IAC 2-1.5-5(a)(3)(B) as a salmonid water and was subject to the water quality criteria for cold water fish in 2-1.5-8(d). In addition to the temperature criteria for a warm water aquatic community in 2-1.5-8(c)(4), the following temperature criteria for cold water fish in 2-1.5-8(d) now apply to the discharge outside of the mixing zone:

(1) The maximum temperature rise above natural shall not exceed 2 °F at any time or place.
(2) Unless due to natural causes, the temperature shall not exceed the following:
    (A) 70 °F at any time.
    (B) 65 °F during spawning or imprinting periods.

In 2001 a biologist at the DNR Lake Michigan Fisheries Office at Michigan City in LaPorte County was consulted about the time periods for spawning and imprinting in designated salmonid waters. IDEM received a letter from DNR dated March 7, 2001 and, based on that letter, IDEM has defined the spawning and imprinting period as September through May. Therefore, the 70 °F criterion is applied from June 1 through August 31 and the 65 °F criterion is applied from September 1 through May 31. The letter indicated that spawning and imprinting can occur at any place in the watershed so the criteria are applied throughout the watershed. The DNR confirmed IDEM's definition of the spawning and imprinting period in a February 23, 2009 email from Brian Breidert of DNR to John Elliott of IDEM.

IDEM fixed water quality monitoring station BD 1 Burns Ditch at Portage is located at the U.S. Highway 12 Bridge upstream of Outfall 002. A comparison of monthly temperature data collected at the station to the warm water and cold water temperature criteria is included in Attachment 35. The comparison shows that the upstream temperature has not exceeded the warm water criterion in any month in any year and has not exceeded the cold water criterion during the months of November through March in any year. For the months of April through

October, the upstream temperature has exceeded the cold water criterion for the month at least once. When the upstream temperature exceeds the criterion due to natural causes, only the criterion that limits the temperature rise above natural to 2 °F applies.

Based on the change in the temperature criteria applicable to the discharge, the temperature limits in the current permit should be revised. The maximum temperature during the months of June, July and August should be set at 70 °F and the maximum temperature during the months of April, May, September, October and November should be set at 65 °F. Otherwise, the temperature criteria applicable to a warm water aquatic community apply. As noted above, there are a number of problems with the current model that is used to determine compliance. It should no longer be considered sufficient to determine compliance with the temperature limits in the permit. The following recommendations are provided to assist in the development of a new means of determining the compliance of the discharges from Outfalls 002, 003 and 004 with the temperature criteria:

(1) If technically feasible, the best option is to install a temperature monitoring device in Portage-Burns Waterway at the edge of the mixing zone. Based on the IDEM policy of allowing one-half the stream for thermal mixing zones, an appropriate thermal mixing zone for Outfalls 002, 003 and 004 would extend along Portage-Burns Waterway from Outfall 002 to mid-stream and then downstream to a point at mid-stream and downstream of Outfall 004. The distance from Outfall 004 to the mouth of Portage-Burns Waterway is about 350 feet. Considering the width of Portage-Burns Waterway, a mid-stream point about 300 feet downstream of Outfall 004 could be considered the edge of the mixing zone. A temperature monitoring device would be installed at this point.

(2) The modeling of thermal mixing zones advanced significantly with the introduction of CORMIX 3 in 1993 and with subsequent revisions. The USGS installed a flow gage upstream of Outfall 002 in 1994 and long-term temperature data upstream of Outfall 002 and for the specific outfalls are available. In addition, instrumentation is available to monitor the dynamic flow regime in Portage-Burns Waterway to determine the frequency of reverse flows in the vicinity of the outfalls. Therefore, it should now be possible to do a more sophisticated analysis to determine the impact of Outfalls 002, 003 and 004 on the temperature of Portage-Burns Waterway and to develop a more refined model.

ATTACHMENT 1
U.S. Steel Midwest Plant Monthly Average Flows

Date	Outfall 001 (mgd)	Outfall 002 (mgd)	Outfall 003 (mgd)	Outfall 004 (mgd)	Outfall 104 (mgd)
Oct-06	0.043	6.963	17.636	43.197	7.259
Nov-06	0.036	7.079	17.428	42.176	7.283
Dec-06	0.056	6.944	18.611	23.276	6.654
Jan-07	0.044	6.583	18.672	26.105	6.927
Feb-07	0.199	5.404	16.051	20.258	6.791
Mar-07	0.053	5.411	15.341	21.344	7.33
Apr-07	0.052	5.377	15.724	20.251	7.492
May-07	0.029	5.364	15.807	21.477	8.072
Jun-07	0.019	5.396	15.984	23.021	8.402
Jul-07	0.021	5.301	16.722	20.356	8.446
Aug-07	0.068	5.683	17.614	43.753	8.488
Sep-07	0.011	5.404	16.557	29.214	8.525
Oct-07	0.028	5.592	16.655	30.224	8.514
Nov-07	0.023	5.117	15.278	36.456	8.17
Dec-07	0.004	5.403	15.585	36.081	7.369
Jan-08	0.003	5.584	15.421	20.808	7.648
Feb-08	0.006	5.416	15.371	16.845	6.914
Mar-08	0.00029	5.424	15.507	21	7.126
Apr-08	0.00047	5.418	16.161	21.469	7.881
May-08	0.00036	5.443	17.051	21.981	8.485
Jun-08	0.00037	5.395	16.864	21.628	8.325
Jul-08	0.00026	5.397	17.014	23.146	8.731
Aug-08	0.000097	5.427	17.033	26.703	8.913
Sep-08	0.007	5.435	16.521	30.398	9.051
Maximum	**0.199**	**7.079**	**18.672**	**43.753**	**9.051**

ATTACHMENT 2
U.S. Steel Midwest Plant Outfall Locations

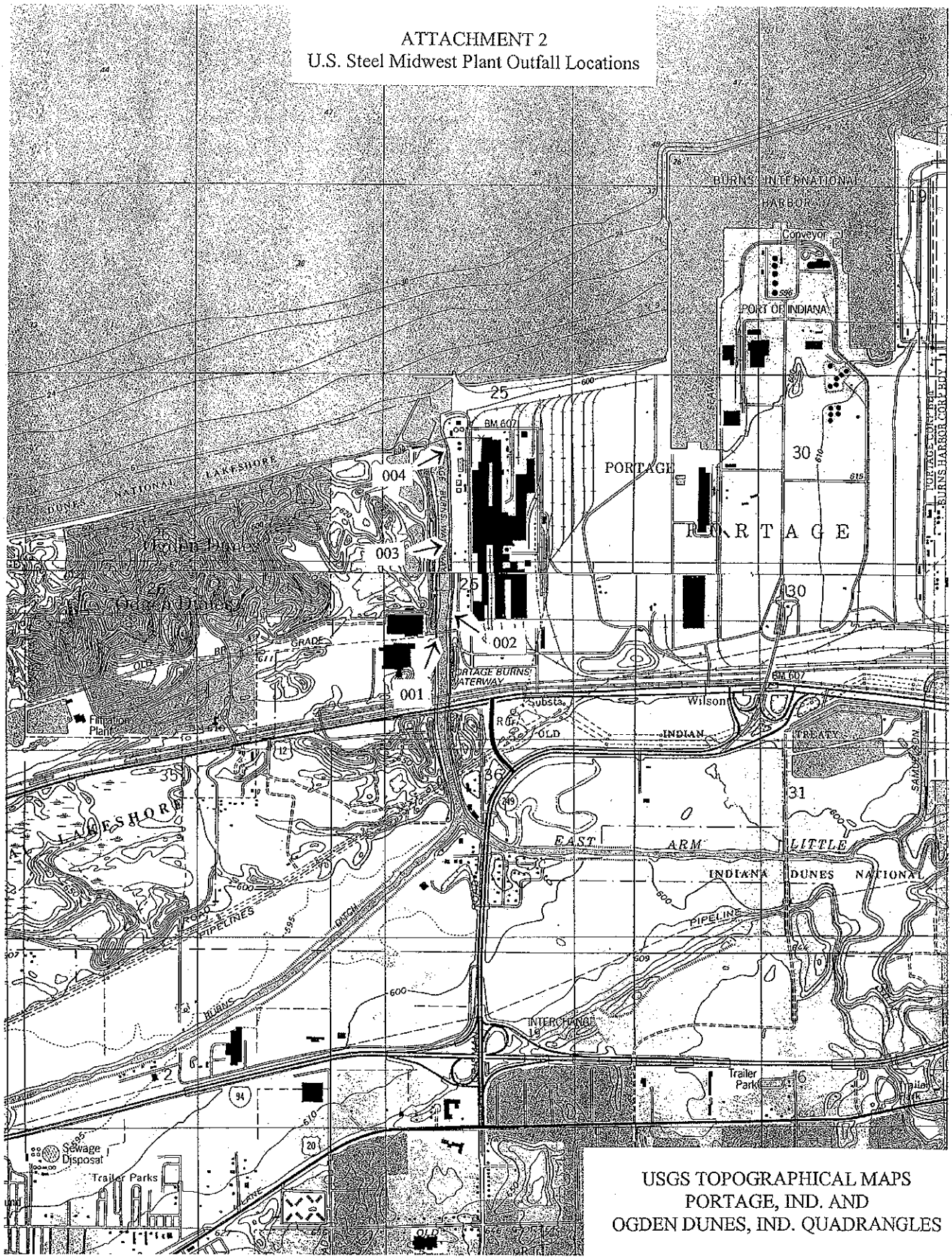

USGS TOPOGRAPHICAL MAPS
PORTAGE, IND. AND
OGDEN DUNES, IND. QUADRANGLES

ATTACHMENT 3
Calculation of Water Quality-based Effluent Limitations

2/27/2009
12:38 PM

Discharger Name:	U.S. Steel - Midwest Plant Outfalls 002, 003 and 004
Receiving Stream:	Portage-Burns Waterway

			Mixing Zone
Discharge Flow	=	69.58 mgd	
Q1,10 receiving stream (Outfall)	=	57 mgd	
Q7,10 receiving stream (Outfall)	=	71 mgd	25%
Summer Stream Temperature (75th percentile)	=	C	
Summer Stream pH (75th percentile)	=	s.u.	
Winter Stream Temperature (75th percentile)	=	C	
Winter Stream pH (75th percentile)	=	s.u.	
Discharge-Induced Mixing Dilution Ratio (S)			

Discharge-Induced Mixing (DIM)	No

Source of Criteria (1)							Background	Samples/		CAS		Indiana Water Quality Criteria for the Great Lakes System (ug/l)							Water Quality-based Effluent Limitations (calculated in accordance with 327 IAC 5-2-11.4 and 11.6)					
												A	B	C	D	E	F	G						
												Aquatic Life Criteria		Human Health Noncancer Criteria		Human Health Cancer Criteria		Wildlife Criteria						
A	B	C	D	E	F	G	(ug/l)	Month	CV	Number	Parameters	Acute (CMC)	Chronic (CCC)	Drinking (HNC-D)	Nondrinking (HNC-N)	Drinking (HCC-D)	Nondrinking (HCC-N)	(WC)	Concentration (ug/l) Average	Concentration (ug/l) Maximum	Mass (lbs/day) Average	Mass (lbs/day) Maximum	Criteria Type	Basis
1	1						0	4	0.6	7782505	Chlorine (total residual)	19	11						10	20	5.8	12	Tier I	CCC

[1] Source of Criteria
1) Indiana numeric water quality criterion; 327 IAC 2-1.5-8(c)(5).

Last revised: 21 November 2008

ATTACHMENT 4
Data From Fixed Station BD 1

Date	Summer Ammonia-N (mg/l)	Adjusted Summer Ammonia-N (mg/l)
5/8/2003	0.2	0.2
6/5/2003	0.2	0.2
7/1/2003	0.2	0.2
8/4/2003	0.1	0.1
9/4/2003	0.2	0.2
10/7/2003	0.1	0.1
11/17/2003	0.1	0.1
5/17/2004	0.2	0.2
6/2/2004	< 0.1	0.063
7/7/2004	0.1	0.1
8/10/2004	0.2	0.2
9/1/2004	< 0.1	0.063
10/5/2004	0.2	0.2
11/3/2004	< 0.1	0.063
5/9/2005	0.3	0.3
6/13/2005	0.2	0.2
7/11/2005	< 0.1	0.063
8/3/2005	< 0.1	0.063
9/12/2005	0.1	0.1
10/11/2005	0.2	0.2
11/15/2005	0.2	0.2
5/15/2006	0.2	0.2
6/27/2006	< 0.1	0.063
7/26/2006	< 0.1	0.063
8/28/2006	0.1	0.1
9/14/2006	< 0.1	0.063
10/2/2006	0.1	0.1
11/15/2006	< 0.1	0.063
5/23/2007	0.1	0.1
6/12/2007	0.2	0.2
7/24/2007	< 0.1	0.063
8/22/2007	< 0.1	0.063
9/4/2007	0.1	0.1
10/10/2007	< 0.1	0.063
11/29/2007	< 0.1	0.063
Geomean		**0.11**
Maximum		**0.3**

Date	Winter Ammonia-N (mg/l)	Adjusted Winter Ammonia-N (mg/l)
12/12/2002	0.2	0.2
1/8/2003	0.3	0.3
2/6/2003	0.4	0.4
3/11/2003	0.4	0.4
4/9/2003	0.2	0.2
12/3/2003	0.3	0.3
1/5/2004	0.3	0.3
2/23/2004	0.2	0.2
3/15/2004	0.2	0.2
4/12/2004	0.2	0.2
12/15/2004	0.3	0.3
1/3/2005	0.2	0.2
2/2/2005	0.3	0.3
3/28/2005	0.1	0.1
4/11/2005	< 0.1	0.095
12/19/2005	0.3	0.3
1/30/2006	0.1	0.1
2/22/2006	0.2	0.2
3/13/2006	0.1	0.1
4/5/2006	0.1	0.1
12/4/2006	0.1	0.1
1/17/2007	0.139	0.139
2/26/2007	0.317	0.317
3/15/2007	0.192	0.192
4/12/2007	0.2	0.2
Geomean		**0.20**
Maximum		**0.4**

ATTACHMENT 5
Data From Fixed Station BD 1

Date	Stream Flow (cfs)	Total Arsenic (ug/l)	Adjusted Total Arsenic (ug/l)	Barium (ug/l)	Total Cadmium (ug/l)	Adjusted Total Cadmium (ug/l)	Chloride (mg/l)	Total Chromium (ug/l)	Adjusted Total Chromium (ug/l)
1/8/2003	254	< 1.2	1	37.7	< 1	0.5	70	< 1.2	0.6
2/6/2003	329	1.41	1.41	43.9	< 1	0.5	98	< 1.2	0.6
3/11/2003	313	1.38	1.38	44.1	< 1	0.5	107	< 1.2	0.6
4/9/2003	786	2.54	2.54	45.9	< 1	0.5	110	2.46	2.46
5/8/2003	1470	2.67	2.67	60.8	< 1	0.5	59	4.58	4.58
6/5/2003	539	2.22	2.22	48.6	< 1	0.5	78	1.41	1.41
7/1/2003	248	2.16	2.16	39.4	< 1	0.5	54	1.63	1.63
8/4/2003	720	2.29	2.29	45.2	< 1	0.5	57	1.26	1.26
9/4/2003	360	2.26	2.26	47	< 1	0.5	58	< 1.2	0.6
10/7/2003	315	1.31	1.31	38.5	< 1	0.5	48	< 1.2	0.6
11/17/2003	403	1.76	1.76	40.4	< 1	0.5	61	< 1.2	0.6
12/3/2003	472	2.27	2.27	43.8	< 1	0.5	65	< 1.2	0.6
1/5/2004	397	< 1.2	1	46	< 1	0.5	79	< 1.2	0.6
2/23/2004	915	1.8	1.8	50.7	< 1	0.5	147	1.33	1.33
3/15/2004	537	< 1.2	1	40.8	< 1	0.5	89	< 1.2	0.6
4/12/2004	383	1.7	1.7	44.3	< 1	0.5	74	< 1.2	0.6
5/17/2004	829	2.35	2.35	45.9	< 1	0.5	82	1.81	1.81
6/2/2004	1550	2.87	2.87	50.3	< 1	0.5	44	2.39	2.39
7/7/2004	413	1.89	1.89	41.8	< 1	0.5	73	< 1.2	0.6
8/10/2004	268	1.6	1.6	38.2	< 1	0.5	55	< 1.2	0.6
9/1/2004	665	2.13	2.13	44	< 1	0.5	52	< 1.2	0.6
10/5/2004	296	1.49	1.49	32.8	< 1	0.5	47	< 1.2	0.6
11/3/2004	875	2.27	2.27	49.4	< 1	0.5	60	1.69	1.69
12/15/2004	712	< 1.2	1	35.3	< 1	0.5	56	< 1.2	0.6
1/3/2005	1150	1.37	1.37	41.9	< 1	0.5	76	2.28	2.28
2/2/2005	441	< 1.2	1	38.6	< 1	0.5	99	< 1.2	0.6
3/28/2005	623	1.39	1.39	40.4	< 1	0.5	104	< 1.2	0.6
4/11/2005	321	2.14	2.14	41.7	< 1	0.5	68	< 1.2	0.6
5/9/2005	305	1.3	1.3	39.3	< 1	0.5	72	< 1.2	0.6
6/13/2005	396	1.88	1.88	38.3	< 1	0.5	68	< 1.2	0.6
7/11/2005	265	1.5	1.5	29.4	< 1	0.5	38	< 1.2	0.6
8/3/2005	257	1.42	1.42	31.9	< 1	0.5	44	< 1.2	0.6
9/12/2005	249	1.26	1.26	31.5	< 1	0.5	48	< 1.2	0.6
10/11/2005	238	< 1.2	1	33.2	< 1	0.5	50	< 1.2	0.6
11/15/2005	288	1.4	1.4	34.4	< 1	0.5	59	< 1.2	0.6
12/19/2005	384	1.5	1.5	35.4	< 1	0.5	83	< 1.2	0.6
1/30/2006	854	< 1.2	1	49.8	< 1	0.5	106	2.2	2.2
2/22/2006	406	< 1.2	1	38.6	< 1	0.5	100	1.52	1.52
3/13/2006	1750	3.44	3.44	86.2	< 1	0.5	75	11.3	11.3
4/5/2006	494	1.27	1.27	43.6	< 1	0.5	88	< 1.2	0.6
5/15/2006	943	1.52	1.52	47.1	< 1	0.5	79	2.13	2.13
6/27/2006	367	1.42	1.42	33.3	< 1	0.5	55	< 1.2	0.6
7/26/2006	430	1.81	1.81	37.4	< 1	0.5	44	1.23	1.23
8/28/2006	681	1.94	1.94	39.9	< 1	0.5	53	1.32	1.32
9/14/2006	2580	2.97	2.97	64.2	< 1	0.5	35	4.64	4.64
10/2/2006	417	1.62	1.62	44.4	< 1	0.5	61	1.75	1.75
11/15/2006	618	1.23	1.23	40.1	< 1	0.5	62	1.31	1.31
12/4/2006	2090	< 1.2	1	41.7	< 1	0.5	49	1.99	1.99
1/17/2007	1670	< 1.2	1	35.4	< 1	0.5	47	2.3	2.3
2/26/2007	1530	1.28	1.28	41.1	< 1	0.5	120	2.42	2.42
3/15/2007	970	1.28	1.28	41.4	< 1	0.5	87	1.78	1.78
4/12/2007	1400	1.4	1.4	41.2	< 1	0.5	81	2.69	2.69
5/23/2007	418	1.41	1.41	42.8	< 1	0.5	64	< 1.2	0.6
6/12/2007	315	1.79	1.79	40.7	< 1	0.5	69	< 1.2	0.6
7/24/2007	324	1.89	1.89	37.6	< 1	0.5	64	< 1.2	0.6
8/22/2007	3190	2.32	2.32	46.2	< 1	0.5	32	2.73	2.73
9/4/2007	675	2.62	2.62	40.1	< 1	0.5	49	< 1.2	0.6
10/10/2007	332	1.89	1.89	40.4	< 1	0.5	61	< 1.2	0.6
11/29/2007	364	1.63	1.63	37.7	< 1	0.5	63	< 1.2	0.6
12/20/2007	511	1.33	1.33	36	< 1	0.5	63	< 1.2	0.6
Geomean			**1.6**	**42**		**0.5**	**66**		**1.0**
Maximum			**3.44**	**86.2**		**0.5**	**147**		**11.3**

ATTACHMENT 6
Data From Fixed Station BD 1

Date	Stream Flow (cfs)	Hexavalent Chromium (ug/l)	Adjusted Hexavalent Chromium (ug/l)	Total Copper (ug/l)	Total Cyanide (mg/l)	Adjusted Total Cyanide (mg/l)	Fluoride (mg/l)	Total Lead (ug/l)	Adjusted Total Lead (ug/l)
1/8/2003	254			1.74	< 0.005	0.0025	0.7	1.93	1.93
2/6/2003	329	< 10	5	1.99	< 0.005	0.0025	0.6	< 1	0.82
3/11/2003	313	< 10	5	2.72	< 0.005	0.0025	0.8	1.96	1.96
4/9/2003	786	< 10	5	2.74	< 0.005	0.0025	0.5	1.61	1.61
5/8/2003	1470	< 10	5	6.2	< 0.005	0.0025	0.4	6.04	6.04
6/5/2003	539	< 10	5	2.2	< 0.005	0.0025	0.5	1.42	1.42
7/1/2003	248	< 10	5	3.31	< 0.005	0.0025	0.6	1.62	1.62
8/4/2003	720	< 10	5	3.89	< 0.005	0.0025	0.4	1.18	1.18
9/4/2003	360	< 10	5	2.41	< 0.005	0.0025	0.7	1.16	1.16
10/7/2003	315	< 10	5	2.83	< 0.005	0.0025		1.01	1.01
11/17/2003	403	< 10	5	2.29	< 0.005	0.0025		1.3	1.3
12/3/2003	472	< 10	5	2.14	< 0.005	0.0025	0.5	< 1	0.82
1/5/2004	397	< 10	5	2.18	< 0.005	0.0025	0.6	1.1	1.1
2/23/2004	915	< 10	5	2.68	< 0.005	0.0025	0.4	1.37	1.37
3/15/2004	537	< 10	5	2.31	< 0.005	0.0025	0.6	1.5	1.5
4/12/2004	383	< 10	5	2.83	< 0.005	0.0025	0.6	1.62	1.62
5/17/2004	829	< 10	5	3.32	< 0.005	0.0025	0.6	2.46	2.46
6/2/2004	1550	< 10	5	4.33	< 0.005	0.0025	0.3	2.56	2.56
7/7/2004	413	< 10	5	2.48	< 0.005	0.0025	0.5	1.23	1.23
8/10/2004	268	< 10	5	2.09	< 0.005	0.0025	0.7	4.17	4.17
9/1/2004	665			2.73	< 0.005	0.0025	0.4	1.65	1.65
10/5/2004	296	< 10	5	2.08	< 0.005	0.0025	0.6	2.56	2.56
11/3/2004	875	< 10	5	3.59	< 0.005	0.0025	0.2	2.73	2.73
12/15/2004	712	< 10	5	2.12	< 0.005	0.0025	0.5	1.25	1.25
1/3/2005	1150			3.76	< 0.005	0.0025	0.3	2.77	2.77
2/2/2005	441			1.98	< 0.005	0.0025	0.5	< 1	0.82
3/28/2005	623	< 10	5	1.83	< 0.005	0.0025	0.4	< 1	0.82
4/11/2005	321	< 10	5	2.04	< 0.005	0.0025	0.4	< 1	0.82
5/9/2005	305	< 10	5	2.33	< 0.005	0.0025	0.6	1.14	1.14
6/13/2005	396	< 10	5	3.07	< 0.005	0.0025	0.6	5.96	5.96
7/11/2005	265	< 10	5	2.14	< 0.005	0.0025	0.6	1.23	1.23
8/3/2005	257	< 10	5	1.93	< 0.005	0.0025	0.6	< 1	0.82
9/12/2005	249	< 10	5	2.22	< 0.005	0.0025	0.7	1.27	1.27
10/11/2005	238	< 10	5	2.85	< 0.005	0.0025	0.6	< 1	0.82
11/15/2005	288	< 10	5	2.15	< 0.005	0.0025	0.4	1.22	1.22
12/19/2005	384			2.28	< 0.005	0.0025	0.7	< 1	0.82
1/30/2006	854	< 10	5	3.88	< 0.005	0.0025	0.4	2.07	2.07
2/22/2006	406	< 10	5	2.83	< 0.005	0.0025	0.6	1.33	1.33
3/13/2006	1750	< 10	5	11.8	< 0.005	0.0025	0.2	12.6	12.6
4/5/2006	494	< 10	5	2.62	< 0.005	0.0025	0.5	1.18	1.18
5/15/2006	943	< 10	5	3.58	< 0.005	0.0025	0.4	2.17	2.17
6/27/2006	367	< 10	5	2.45			0.6	1.19	1.19
7/26/2006	430	< 10	5	2.98			0.5	1.64	1.64
8/28/2006	681	< 10	5	2.97			0.5	1.72	1.72
9/14/2006	2580	< 10	5	7.34			0.2	6.27	6.27
10/2/2006	417	< 10	5	3.95			0.5	1.9	1.9
11/15/2006	618	< 10	5	2.87			0.5	< 1	0.82
12/4/2006	2090			3.04			0.3	1.46	1.46
1/17/2007	1670			2.62			0.23	1.18	1.18
2/26/2007	1530			4.28			0.3	2.39	2.39
3/15/2007	970	< 10	5	3.14			0.41	2	2
4/12/2007	1400	< 10	5	4.36			0.3	2.62	2.62
5/23/2007	418	< 10	5	2.82			0.4	1.16	1.16
6/12/2007	315	< 10	5	2.71			0.4	1.21	1.21
7/24/2007	324	< 10	5	2.27			0.7	< 1	0.82
8/22/2007	3190			4.56			0.2	2.68	2.68
9/4/2007	675	< 10	5	2.42			0.4	< 1	0.82
10/10/2007	332	< 10	5	2.64			0.6	1.01	1.01
11/29/2007	364	< 10	5	2.35			0.5	1.95	1.95
12/20/2007	511			2.38			0.4	1.04	1.04
Geomean			**5**	**2.8**		**0.0025**	**0.46**		**1.6**
Maximum			**5**	**11.8**		**0.0025**	**0.8**		**12.6**

ATTACHMENT 7
Data From Fixed Station BD 1

Date	Stream Flow (cfs)	Total Manganese (ug/l)	Total Nickel (ug/l)	Total Selenium (ug/l)	Adjusted Total Selenium (ug/l)	Total Silver (ug/l)	Adjusted Total Silver (ug/l)	Sulfate (mg/l)	Total Zinc (ug/l)	Adjusted Total Zinc (ug/l)
1/8/2003	254	96.6	2.59	< 1.2	0.6	< 1	0.5	76	9.27	9.27
2/6/2003	329	109	3.02	< 1.2	0.6	< 1	0.5	92	8.58	8.58
3/11/2003	313	135	3.54	1.41	1.41	< 1	0.5	91	7.4	7.4
4/9/2003	786	107	3.44	< 1.2	0.6	< 1	0.5	95	8.43	8.43
5/8/2003	1470	227	6.27	< 1.2	0.6	< 1	0.5	64	23.3	23.3
6/5/2003	539	100	4	1.34	1.34	< 1	0.5	84	7.02	7.02
7/1/2003	248	96.2	3.87	< 1.2	0.6	< 1	0.5	64	7	7
8/4/2003	720	110	2.39	< 1.2	0.6	< 1	0.5	53	7.42	7.42
9/4/2003	360	95.5	2.75	< 2	1	< 1	0.5	72	< 6	4.9
10/7/2003	315	71.8	2.36	< 2	1	< 1	0.5	63	< 6	4.9
11/17/2003	403	94.7	2.48	< 2	1	< 1	0.5	66	6.72	6.72
12/3/2003	472	76.3	2.39	< 2	1	< 1	0.5	78	< 6	4.9
1/5/2004	397	90.7	2.26	< 2	1	< 1	0.5	91	< 6	4.9
2/23/2004	915	163	2.74	< 2	1	< 1	0.5	90	11.4	11.4
3/15/2004	537	90	2.35	< 2	1	< 1	0.5	80	< 6	4.9
4/12/2004	383	93.4	2.82	< 2	1	< 1	0.5	85	6.81	6.81
5/17/2004	829	133	3.22	< 2.2	1.1	< 1	0.5	69	9.62	9.62
6/2/2004	1550	116	3.15	2.69	2.69	< 1	0.5	50	12.4	12.4
7/7/2004	413	110	2.23			< 1	0.5	71	< 6	4.9
8/10/2004	268	88	2.28	< 2.2	1.1	< 1	0.5	70	< 6	4.9
9/1/2004	665	98	2.35	< 2.2	1.1	< 1	0.5	59	7.65	7.65
10/5/2004	296	56	1.73	< 2.2	1.1	< 1	0.5	64	< 6	4.9
11/3/2004	875	143	2.87	< 2.2	1.1	< 1	0.5	83	14.2	14.2
12/15/2004	712	80.1	2.26	< 2.2	1.1	< 1	0.5	74	7	7
1/3/2005	1150	105	2.86	< 2.2	1.1	< 1	0.5	62	15.1	15.1
2/2/2005	441	125	2.29	< 2.2	1.1	9.2	9.2	75	8.42	8.42
3/28/2005	623	89.8	1.92	< 2.2	1.1	< 1	0.5	74	< 6	4.9
4/11/2005	321	99.6	1.65	5.56	5.56	< 1	0.5	81	< 6	4.9
5/9/2005	305	106	1.94	< 2.2	1.1	< 1	0.5	76	8.26	8.26
6/13/2005	396	151	2.31	< 2.2	1.1	< 1	0.5	66	9.49	9.49
7/11/2005	265	62.7	1.68	< 2.2	1.1	< 1	0.5	44	6.72	6.72
8/3/2005	257	69.7	1.58	< 2.2	1.1	< 1	0.5	48	< 6	4.9
9/12/2005	249	72.4	2.11	< 2.2	1.1	< 1	0.5	54	6.89	6.89
10/11/2005	238	64.6	2.52	< 2.2	1.1	< 1	0.5	53	7.59	7.59
11/15/2005	288	74.6	3.02	< 2.2	1.1	< 1	0.5	67	8.58	8.58
12/19/2005	384	86.9	2.69	< 2.2	1.1	< 1	0.5	77	9.72	9.72
1/30/2006	854	100	2.75	< 2.2	1.1	< 1	0.5	96	21.5	21.5
2/22/2006	406	98.5	2.68	< 2.2	1.1	< 1	0.5	95	11.4	11.4
3/13/2006	1750	384	9.89	< 2.2	1.1	< 1	0.5	65	56.8	56.8
4/5/2006	494	109	2.31	< 2.2	1.1	< 1	0.5	92	8.78	8.78
5/15/2006	943	111	2.91	< 2.2	1.1	< 1	0.5	76	12.3	12.3
6/27/2006	367	69.5	1.88	< 2.2	1.1	< 1	0.5	58	9.54	9.54
7/26/2006	430	85.6	2.06	< 2.2	1.1	< 1	0.5	46	12.5	12.5
8/28/2006	681	101	2.4	< 2.2	1.1	< 1	0.5	50	10.9	10.9
9/14/2006	2580	268	5.33	< 2.2	1.1	< 1	0.5	34	30.9	30.9
10/2/2006	417	129	2.55	< 2.2	1.1	< 1	0.5	55	11.4	11.4
11/15/2006	618	84.4	2.61	< 2.2	1.1	< 1	0.5	67	8.58	8.58
12/4/2006	2090	94.7	2.8	< 2.2	1.1	< 1	0.5	50	11.4	11.4
1/17/2007	1670	69.8	2.46	< 2.2	1.1	< 1	0.5	55.5	8.76	8.76
2/26/2007	1530	214	2.97	< 2.2	1.1	< 1	0.5	48.7	15.1	15.1
3/15/2007	970	114	2.74	< 2.2	1.1	< 1	0.5	58.7	15.4	15.4
4/12/2007	1400	178	3.27	< 2.2	1.1	< 1	0.5	69	20.9	20.9
5/23/2007	418	104	2.57	< 2.2	1.1	< 1	0.5	48	8.44	8.44
6/12/2007	315	108	2.88	2.28	2.28	< 1	0.5	68	8.68	8.68
7/24/2007	324	91.5	2.36	< 2.2	1.1	< 1	0.5	52	6.93	6.93
8/22/2007	3190	121	3.48	< 2.2	1.1	< 1	0.5	45	14.6	14.6
9/4/2007	675	327	2.25	< 2.2	1.1	< 1	0.5	50	7.91	7.91
10/10/2007	332	112	2.6	< 2.2	1.1	< 1	0.5	65	8.44	8.44
11/29/2007	364	94.2	2.13	< 2.2	1.1	< 1	0.5	70	10.2	10.2
12/20/2007	511	95.4	2.03	< 2.2	1.1	< 1	0.5	67	8.95	8.95
Geomean		107	2.6		1.1		0.52	66		9.1
Maximum		384	9.89		5.56		9.2	96		56.8

ATTACHMENT 8
Data From Deep River Trace Metals Sampling

Date	Total Antimony (ug/l)	Adjusted Total Antimony (ug/l)	Total Barium (ug/l)	Total Beryllium (ug/l)	Total Cadmium (ug/l)	Adjusted Total Cadmium (ug/l)	Hexavalent Chromium (ug/l)	Adjusted Hexavalent Chromium (ug/l)
4/24/2002	0.29	0.29	38	0.0445	0.033	0.033	0.2	0.2
7/10/2002	0.3	0.3	41	0.0151	< 0.037	0.028	< 0.6	0.3
10/22/2002	0.35	0.35	40	0.0173	< 0.037	0.028	< 0.6	0.3
1/14/2003	0.35	0.35	36	0.0104	0.013	0.013	< 0.6	0.3
5/20/2003	0.5	0.5	49	0.0322	< 0.037	0.028	< 0.6	0.3
8/19/2003	0.5	0.5	36	0.0193	< 0.037	0.028	< 0.6	0.3
11/18/2003	< 0.73	0.64	40	0.0208	0.013	0.013	< 0.6	0.3
2/24/2004	< 0.73	0.64	39	0.0183	0.031	0.031	< 0.6	0.3
9/8/2004	0.26	0.26	37	0.0205	0.02	0.02		
10/20/2004	0.22	0.22	38	0.023	0.039	0.039		
3/10/2005	0.22	0.22	41	0.0198	0.029	0.029		
6/23/2005	0.3	0.3	28	0.0189	0.017	0.017		
9/1/2005	0.29	0.29	38	0.0208	0.022	0.022		
12/8/2005	0.27	0.27	47	0.0208	0.03	0.03		
3/16/2006	0.3	0.3	45	0.102	0.038	0.038		
5/25/2006	0.25	0.25	47	0.0157	0.023	0.023		
Geomean		**0.33**	**40**	**0.022**		**0.025**		**0.3**
Maximum		**0.64**	**49**	**0.102**		**0.039**		**0.3**

ATTACHMENT 9
Data From Deep River Trace Metals Sampling

Date	Fluoride (mg/l)	Total Manganese (ug/l)	Total Selenium (ug/l)	Adjusted Total Selenium (ug/l)	Total Silver (ug/l)	Adjusted Total Silver (ug/l)	Total Thallium (ug/l)
4/24/2002	0.21	73	1	1	0.0236	0.0236	0.0279
7/10/2002	0.3	187	< 0.9	0.45	< 0.014	0.011	0.007
10/22/2002	0.2	74	< 0.9	0.45	0.0081	0.0081	0.0102
1/14/2003	0.23	61	< 0.9	0.45	0.0078	0.0078	0.0102
5/20/2003	0.23	204	< 0.9	0.45	0.0144	0.0144	0.0238
8/19/2003	0.22	100	< 0.9	0.45	0.0155	0.0155	0.0096
11/18/2003	0.25	106	< 0.9	0.45	0.0104	0.0104	0.0079
2/24/2004	0.22	183	0.6	0.6	0.0256	0.0256	0.0164
9/8/2004		106	< 0.9	0.45	0.0073	0.0073	0.009
10/20/2004		60	< 0.9	0.45	0.0078	0.0078	0.0113
3/10/2005		77	0.5	0.5	0.0195	0.0195	0.0202
6/23/2005		101	0.5	0.5	< 0.014	0.011	0.0151
9/1/2005		121	0.6	0.6	< 0.014	0.011	0.0079
12/8/2005		86.6	0.7	0.7	0.0493	0.0493	0.0145
3/16/2006	0.18	72.5	0.7	0.7	0.0258	0.0258	0.0476
5/25/2006		66.5	1	1	0.0197	0.0197	0.0113
Geomean	**0.22**	**97**		**0.6**		**0.014**	**0.013**
Maximum	**0.3**	**204**		**1**		**0.0493**	**0.0476**

ATTACHMENT 10
Lake Michigan Data From BP Products April 2002 Permit Renewal Application

Date	Total Boron (mg/l)	Total Cobalt (ug/l)	Total Molybdenum (mg/l)	Adjusted Total Molybdenum (mg/l)	Total Tin (mg/l)	Adjusted Total Tin (mg/l)	Total Titanium (mg/l)	Adjusted Total Titanium (mg/l)	Total Vanadium (mg/l)
9/5/2001		0.16	0.001	0.001	<0.01	0.005	<0.025	0.012	
9/10/2001		0.9	0.0012	0.0012	<0.01	0.005	<0.025	0.012	
9/12/2001		0.11	<0.001	0.00085	<0.01	0.005	<0.025	0.012	
9/13/2001		0.28	<0.001	0.00085	<0.01	0.005	<0.025	0.012	
9/18/2001		0.49	0.0009	0.0009	<0.01	0.005	<0.025	0.012	
10/1/2001		0.16	0.00086	0.00086	<0.01	0.005	<0.025	0.012	
10/3/2001		0.89	0.00078	0.00078	<0.01	0.005	<0.025	0.012	
6/24/1998	0.029		0.00129	0.00129					0.00169
6/24/1998	0.0209		0.00053	0.00053					0.0022
8/31/1998	0.064		0.00134	0.00134					0.00317
8/31/1998	0.0196		0.00115	0.00115					0.0026
8/31/1998	0.06		0.00127	0.00127					0.00336
11/4/1998			0.0015	0.0015					0.0092
Geomean	**0.034**	**0.32**		**0.001**		**0.005**		**0.012**	**0.0031**

ATTACHMENT 11
Data From Fixed Station BD 1

Date	Stream Flow (cfs)	Naphthalene (ug/l)	Adjusted Naphthalene (ug/l)	Total Phenolics (ug/l)	Adjusted Total Phenolics (ug/l)
1/25/2000	222			< 5	2.5
2/15/2000	417			< 5	2.5
3/21/2000	530			< 5	2.5
3/29/2000	348	< 0.1	0.05		
4/24/2000	1200			< 5	2.5
4/26/2000	766	< 0.1	0.05		
5/4/2000	473	< 0.1	0.05		
5/10/2000	417	< 0.1	0.05		
5/17/2000	283	< 0.1	0.05		
5/24/2000	258	< 0.1	0.05		
5/25/2000	272			< 5	2.5
5/31/2000	482	< 0.1	0.05		
6/7/2000	862	< 0.1	0.05		
6/13/2000	732	0.4	0.4		
6/21/2000	1660	< 0.1	0.05	< 5	2.5
6/28/2000	1820	< 0.1	0.05		
7/6/2000	533	< 0.1	0.05		
7/13/2000	369	< 0.1	0.05		
7/18/2000	258			< 5	2.5
7/19/2000	239	< 0.1	0.05		
7/26/2000	252	< 0.1	0.05		
8/2/2000	278	< 0.1	0.05		
8/22/2000	239			< 5	2.5
9/20/2000	240			< 5	2.5
10/23/2000	253			< 5	2.5
11/21/2000	291			6	6
12/13/2000	307			10	10
Geomean			**0.057**		**3.0**
Maximum			**0.4**		**10**

ATTACHMENT 12
Determination of Lowest Combined 7-Day Average Flow for Outfalls 002 and 003

Comparison of Outfall 002 and Outfall 003 Discharge Flows to Stream Flow at Gaging Station

Month	Outfall 002		Outfall 003		Total of 002 and 003 Average Flows		04095090
	Ave. (mgd)	Max. (mgd)	Ave. (mgd)	Max. (mgd)	(mgd)	(cfs)	Ave. (cfs)
Oct-06	6.963	7.23	17.636	18.196	24.599	38	614
Nov-06	7.079	8.063	17.428	19.203	24.507	38	572
Dec-06	6.944	7	18.611	19.045	25.555	40	1224
Jan-07	6.583	7.009	18.672	19.94	25.255	39	1144
Feb-07	5.404	5.437	16.051	17.146	21.455	33	548
Mar-07	5.411	5.457	15.341	15.453	20.752	32	1045
Apr-07	5.377	5.412	15.724	15.864	21.101	33	1423
May-07	5.364	5.44	15.807	16.312	21.171	33	554
Jun-07	5.396	5.454	15.984	16.693	21.38	33	392
Jul-07	5.301	5.459	16.722	17.004	22.023	34	412
Aug-07	5.683	6.351	17.614	19.9	23.297	36	1650
Sep-07	5.404	5.465	16.557	16.78	21.961	34	459
Oct-07	5.592	6.25	16.655	16.859	22.247	34	447
Nov-07	5.117	5.368	15.278	16.383	20.395	32	393
Dec-07	5.403	5.439	15.585	16.312	20.988	32	594
Jan-08	5.584	6.252	15.421	15.6	21.005	32	1065
Feb-08	5.416	5.449	15.371	15.652	20.787	32	971
Mar-08	5.424	5.444	15.507	15.732	20.931	32	763
Apr-08	5.418	5.455	16.161	17.165	21.579	33	924
May-08	5.443	5.496	17.051	17.152	22.494	35	685
Jun-08	5.395	5.435	16.864	17.102	22.259	34	599
Jul-08	5.397	5.444	17.014	17.433	22.411	35	491
Aug-08	5.427	5.472	17.033	17.387	22.46	35	826
Sep-08	5.435	5.463	16.521	17.048	21.956	34	2606

Determination of Lowest Combined 7-Day Average Flow

Date	Outfall 002		Outfall 003		Total of 002 and 003 Weekly Average Flows	
	Daily Ave. (mgd)	Weekly Ave. (mgd)	Daily Ave. (mgd)	Weekly Ave. (mgd)	(mgd)	(cfs)
10/30/2007	5.445	--	16.786	--	--	--
11/6/2007	4.522	4.984	13.371	15.079	20.062	31
11/13/2007	5.274	4.898	15.587	14.479	19.377	30
11/20/2007	5.368	5.321	16.383	15.985	21.306	33
11/27/2007	5.305	5.337	15.77	16.077	21.413	33
12/4/2007	5.439	5.372	16.312	16.041	21.413	33
12/11/2007	5.422	5.431	15.617	15.965	21.395	33
12/18/2007	5.384	5.403	15.157	15.387	20.79	32
12/25/2007	5.366	5.375	15.252	15.205	20.5795	32
1/1/2008	5.299	5.333	15.387	15.320	20.652	32

ATTACHMENT 13

Data From Fixed Station BD 1		Data From Fixed Station LM OD	
Date	Hardness (mg/l)	Date	Hardness (mg/l)
1/8/2003	280	1/8/2003	142
2/6/2003	326	2/6/2003	154
3/11/2003	323	3/11/2003	158
4/9/2003	316	4/9/2003	143
5/8/2003	253	5/8/2003	145
6/5/2003	314	6/5/2003	137
7/1/2003	259	7/1/2003	129
8/4/2003	266	8/4/2003	133
9/4/2003	283	9/4/2003	134
10/7/2003	250	10/7/2003	134
11/17/2003	287	11/17/2003	143
12/3/2003	315	12/3/2003	145
1/5/2004	333	1/5/2004	137
2/23/2004	336	2/23/2004	141
3/15/2004	306	3/15/2004	145
4/12/2004	294	4/12/2004	141
5/17/2004	286	5/17/2004	131
6/2/2004	230	6/2/2004	126
7/7/2004	276	7/7/2004	131
8/10/2004	261	8/10/2004	138
9/1/2004	253	9/2/2004	144
10/5/2004	255	10/5/2004	136
11/3/2004	288	11/3/2004	138
12/15/2004	275	12/15/2004	151
1/3/2005	244	1/3/2005	149
2/2/2005	311	2/2/2005	150
3/28/2005	230	3/28/2005	108
4/11/2005	292	4/12/2005	142
5/9/2005	282	5/9/2005	140
6/13/2005	261	6/14/2005	136
7/11/2005	199	7/12/2005	136
8/3/2005	218	8/22/2005	143
9/12/2005	229	9/12/2005	139
10/11/2005	226	10/11/2005	127
11/15/2005	240	11/15/2005	128
12/19/2005	273	12/19/2005	123
1/30/2006	307	1/30/2006	137
2/22/2006	314	2/22/2006	150
3/13/2006	232	3/13/2006	136
4/5/2006	330	4/5/2006	140
5/15/2006	306	5/15/2006	150
6/27/2006	221	6/27/2006	130
7/26/2006	208	7/26/2006	122
8/28/2006	229	8/28/2006	137
9/14/2006	176	9/14/2006	131
10/2/2006	279	10/3/2006	134
11/15/2006	316	11/16/2006	145
12/4/2006	250	12/4/2006	133
1/17/2007	233	1/17/2007	137
2/26/2007	240	2/26/2007	237
3/15/2007	244	3/15/2007	146
4/12/2007	267	4/11/2007	168
5/23/2007	269	5/24/2007	127
6/12/2007	286	6/13/2007	141
7/24/2007	259	7/25/2007	144
8/22/2007	205	8/22/2007	138
9/4/2007	242	9/4/2007	144
10/10/2007	276	10/10/2007	146
11/29/2007	286	11/29/2007	150
12/20/2007	289	12/20/2007	150
50th %	271	50th %	140

ATTACHMENT 14
Data From Fixed Station BD 1

Date	Summer pH (s.u.)
5/8/2003	7.9
6/5/2003	7.9
7/1/2003	8
8/4/2003	8
9/4/2003	7.9
10/7/2003	7.9
11/17/2003	7.7
5/17/2004	7.9
6/2/2004	7.9
7/7/2004	8.1
8/10/2004	7.8
9/1/2004	8.1
10/5/2004	8
11/3/2004	7.7
5/9/2005	8.2
6/13/2005	8.1
7/11/2005	8.2
8/3/2005	7.7
9/12/2005	7.8
10/11/2005	8
11/15/2005	7.7
5/15/2006	7.9
6/27/2006	7.9
7/26/2006	7.8
8/28/2006	7.7
9/14/2006	7.8
10/2/2006	7.9
11/15/2006	7.9
5/23/2007	8.1
6/12/2007	8.07
7/24/2007	8.1
8/22/2007	7.78
9/4/2007	7.68
10/10/2007	7.89
11/29/2007	8.11
75th %	**8.0**
Maximum	**8.2**

Date	Winter pH (s.u.)
12/12/2002	7.7
1/8/2003	7.9
2/6/2003	8
3/11/2003	7.9
4/9/2003	7.9
12/3/2003	7.7
1/5/2004	7.8
2/23/2004	7.9
3/15/2004	8.1
4/12/2004	8.2
12/15/2004	7.7
1/3/2005	7.8
2/2/2005	7.7
3/28/2005	8.2
4/11/2005	8.3
12/19/2005	7.7
1/30/2006	7.52
2/22/2006	7.8
3/13/2006	7.7
4/5/2006	8.1
12/4/2006	7.7
1/17/2007	8
2/26/2007	7.9
3/15/2007	7.9
4/12/2007	7.9
75th %	**8.0**
Maximum	**8.3**

ATTACHMENT 15
Data From Fixed Station BD 1

Date	Summer Temp. (°C)
5/8/2003	14.8
6/5/2003	16.7
7/1/2003	24.3
8/4/2003	25.3
9/4/2003	21.5
10/7/2003	15.6
11/17/2003	12.5
5/17/2004	20.4
6/2/2004	17.9
7/7/2004	23.8
8/10/2004	23.3
9/1/2004	23.1
10/5/2004	15.8
11/3/2004	12.9
5/9/2005	19.5
6/13/2005	25.5
7/11/2005	24.3
8/3/2005	27.5
9/12/2005	26.7
10/11/2005	18.3
11/15/2005	12.9
5/15/2006	13.9
6/27/2006	22.1
7/26/2006	25.5
8/28/2006	23.1
9/14/2006	18.6
10/2/2006	19.4
11/15/2006	9.3
5/23/2007	23.2
6/12/2007	24.24
7/24/2007	24.61
8/22/2007	21.36
9/4/2007	24.93
10/10/2007	17.75
11/29/2007	4.11
75th %	**24**
Maximum	**27.5**

Date	Winter Temp. (°C)
12/12/2002	7.5
1/8/2003	6.7
2/6/2003	4.7
3/11/2003	3
4/9/2003	8.6
12/3/2003	5.2
1/5/2004	4.2
2/23/2004	5.2
3/15/2004	7.8
4/12/2004	11.6
12/15/2004	5.3
1/3/2005	5.7
2/2/2005	5.4
3/28/2005	10.2
4/11/2005	15.9
12/19/2005	1.7
1/30/2006	6.62
2/22/2006	6.2
3/13/2006	12.5
4/5/2006	12.3
12/4/2006	2
1/17/2007	1
2/26/2007	2.6
3/15/2007	8.2
4/12/2007	6.6
75th %	**8.2**
Maximum	**15.9**

ATTACHMENT 16
Calculation of Preliminary Effluent Limitations

Discharger Name:	U.S. Steel - Midwest Plant Outfall 004
Receiving Stream:	Portage-Burns Waterway

2/27/2009
12:44 PM

			Mixing Zone
Discharge Flow	=	45.8 mgd	
Q1,10 receiving stream (Outfall)	=	57 mgd	
Q7,10 receiving stream (Outfall)	=	50 mgd	25%
Q7,10 receiving stream (Industrial Water Supply)	=	mgd	25%
Harmonic Mean Flow (Outfall)	=	247 mgd	25%
Harmonic Mean Flow (Drinking Water Intake)	=	mgd	25%
Q30,10 receiving stream	=	140 mgd	25%
Discharge-Induced Mixing Dilution Ratio (S)	=		
Hardness (50th percentile)	=	271 mg/l	
Stream pH (50th percentile)	=	s.u.	
Summer Stream Temperature (75th percentile)	=	24 C	
Summer Stream pH (75th percentile)	=	8.0 s.u.	
Winter Stream Temperature (75th percentile)	=	8.2 C	
Winter Stream pH (75th percentile)	=	8.0 s.u.	

Discharge-Induced Mixing (DIM)	No
Drinking Water Intake Downstream	No
Industrial Water Supply Downstream	No

Metals Translators
(dissolved to total recoverable)

	Acute	Chronic
Aluminum		
Antimony	1.000	1.000
Arsenic	1.000	1.000
Barium	1.000	1.000
Beryllium	1.000	1.000
Cadmium	0.902	0.867
Chromium III	0.316	0.860
Chromium VI	0.982	0.962
Cobalt	1.000	1.000
Copper	0.960	0.960
Iron		
Lead	0.646	0.646
Manganese	1.000	1.000
Mercury	0.85	0.85
Molybdenum	1.000	1.000
Nickel	0.998	0.997
Selenium		0.922
Silver	0.85	1.000
Strontium	1.000	1.000
Thallium	1.000	1.000
Tin	1.000	1.000
Titanium	1.000	1.000
Vanadium	1.000	1.000
Zinc	0.978	0.986

Source of Criteria [1] A	B	C	D	E	F	G	Background (ug/l)	BCC	Add	Samples/ Month	CV	CAS Number	Parameters[2]	Indiana Water Quality Criteria for the Great Lakes System (ug/l) A Aquatic Life Criteria Acute (CMC)	Chronic (CCC)	B Human Health Noncancer Criteria Drinking (HNC-D)	Nondrinking (HNC-N)	C Human Health Cancer Criteria Drinking (HCC-D)	Nondrinking (HCC-N)	G Wildlife Criteria (WC)	Preliminary Effluent Limitations (calculated in accordance with 327 IAC 5-2-11.4 and 11.6) Concentration (ug/l)[3] Average	Maximum	Mass (lbs/day) Average	Maximum	Criteria Type	Basis
4	4	3	3				0.33			4	0.6	7440360	Antimony	720	80	10	2000				99	200	36	73	Tier II	CCC
1	1	3	3				1.5			2	0.6	7440382	Arsenic III[4]	339.8	147.0	10	230				190	370	66	135	Tier I	CCC
4	4						43			4	0.6	7440393	Barium	3604.33	1261.19						1500	3100	548	1133	Tier II	CCC
4	4	3	3				0.022			4	0.6	7440417	Beryllium[4]	267.78	29.73	40	200				37	74	14	27	Tier II	CCC
1	1	3	3				0.025			2	0.6	7440439	Cadmium[4]	12.56	4.67	14	1400				7.7	13	2.8	4.8	Tier I	CCC
1	1	3	3				1			4	0.6	16065831	Chromium (III)	1289	108	410000	43000000				241.23	483.99	88.18	176.91	Tier I	CCC
1	1	3	3				0			4	0.6	18540299	Chromium (VI)	15.73	10.56	230	25000				14	27	5.1	9.9	Tier I	CCC
												7440473	Total Chromium								260	510	95	187	Tier I	CCC
4	4	3	3				0.32			4	0.6	7440484	Cobalt	120	19	130	11000				23	47	8.4	17	Tier II	CCC
1	1	3	3				2.8			2	0.6	7440508	Copper	34.38	20.99	280	56000				30	62	11	19	Tier I	CCC
3	3						1.5			4	0.6	7439921	Lead[4]	291.22	14.75						28	55	10	20	Tier I	CCC
4	4	3	3				107			4	0.6	7439965	Manganese	2732	1270	3900	220000				1500	3100	548	1133	Tier II	CCC
1	1	1	1			1		Y		1	0.6	7439976	Mercury[6]	1.440	0.772	0.0018	0.0018			0.0013	0.0013	0.0032	0.00048	0.0012	Tier I	WC
4	4	3	3				1			4	0.6	7439987	Molybdenum	1200	300	130	10000				990	2000	362	731	Tier II	CCC
1	1	3	3				2.6			4	0.6	7440020	Nickel	1088.32	120.88	460	47000				150	300	55	110	Tier I	CCC
1	1	3	3				1.1			4	0.6	7782492	Selenium		4.63	140	3400				5.7	12	2.1	4.4	Tier I	CCC
3	4	3	3				0.014			2	0.6	7440224	Silver	0.46	0.038	130	26000				0.076	0.13	0.028	0.048	Tier II	CCC
4	4	3	3				0.013			4	0.6	7440280	Thallium	54	6	2	5				7.4	15	2.7	5.5	Tier II	CCC
3	3						5			4	0.6	7440315	Tin	1300	140						170	340	62	124	BASV[7]	CCC
3	3						12			4	0.6	7440326	Titanium	23000	2500						3100	6200	1133	2266	BASV[7]	CCC
4	4	3	3				3.1			4	0.6	7440622	Vanadium	119	12	230	2300				14	27	5.1	9.9	Tier II	CCC
1	1	3	3				9.1			4	0.6	7440666	Zinc	272.72	274.95	9000	250000				270	530	99	201	Tier I	CMC
4	4	3	3				0			4	0.6	100414	Ethylbenzene	1000	110	2100	9100				140	270	51	99	Tier II	CCC
4	4	3	3				0.057			4	0.6	91203	Naphthalene	200	26	490	1900				32	65	12	24	Tier II	CCC
3	4	4	4				3			4	0.6	108952	Phenol	4900	180	2000	2300				220	450	80	164	Tier II	CCC
4	4	3	3	3	3		0		Y	4	0.6	127184	Tetrachloroethylene[4]	480	60	320	3700	11	60		74	150	27	55	Tier II	CCC
4	4	1	1				0			4	0.6	108883	Toluene	840	94	5600	51000				120	230	44	84	Tier II	CCC

4	4						0			4	0.6	71556	1,1,1-Trichloroethane	3700	410						510	1000	186	366	Tier II	CCC
												7664417	Total Ammonia (as N)															
1	1						110			4	0.6		Summer	5372.36	1270.05						1500	3100	548	1133	Tier I	CCC
1	1						200			4	0.5		Winter	5919.24	1349.12						1600	3200	585	1170	Tier I	CCC
4	4	5	5				34			4	0.6	7440428	Boron	10000	1600	2500	200000				2000	3900	731	1426	Tier II	CCC
1	1	1					66000			4	0.6	1688706	Chloride	860000	230000	250000					257000	516000	93941	188613	Tier I	CCC
1	1						0			2	0.6	57125	Cyanide, Free	22	5.2						7.5	13	2.7	4.8	Tier I	CCC
		1	1				2.5			4	0.6	57125	Cyanide, Total			650	48000				136000	281000	42401	102714	Tier I	HNC-N
4	4						460			4	0.6	16984488	Fluoride	12000	2400						4000	8100	1482	2961	Tier II	CCC
5	5	1	1				66000			4	0.6	14808798	Sulfate	1000000	1000000	250000					294000	193-1000	352369	706932	EASV[7]	CMC
													Whole Effluent Toxicity (WET)															
1													Acute (TUa) without Mixing Zone	1.0								1.0						
	1												Chronic (TUc)		1.0						1.5							
													Additional Criteria for Lake Michigan															
	2						66000			4	0.6	14808798	Sulfate[8]		250000						534000	1032000	187882	377225	Lake M	CCC
	2						460			4	0.6	16984488	Fluoride[8]		1000						1700	3500	621	1279	Lake M	CCC

1 Number of Carcinogenic pollutants present in the effluent

[1] Sources of Criteria
1) Indiana numeric water quality criterion; 327 IAC 2-1.5-8(b)(3), Table 8-1; 327 IAC 2-1.5-8(b)(5), Table 8-3; 327 IAC 2-1.5-8(b)(6), Table 8-4; 327 IAC 2-1.5-8(c)(5); and 327 IAC 2-1.5-8(f).
2) Additional Criteria for Lake Michigan, 327 IAC 2-1.5-8(j), Table 8-9. These criteria are not aquatic life criteria, however, since they are treated as 4-day average criteria, they are included in the chronic aquatic criteria column.
3) Tier I criterion calculated using the methodology in 327 IAC 2-1.5-11, 327 IAC 2-1.5-14, and 327 IAC 2-1.5-15.
4) Tier II value calculated using the methodology in 327 IAC 2-1.5-12, 327 IAC 2-1.5-14, and 327 IAC 2-1.5-15.
5) Estimated ambient screening value (EASV) calculated in accordance with 327 IAC 5-2-11.5(b)(3)(A)(i).
[2] The aquatic criteria for the metals are dissolved criteria. The human health criteria for the metals are total recoverable. The aquatic criteria for cyanide are free cyanide. The human health criteria for cyanide are total cyanide.
[3] The WQBELs for the metals are total recoverable (with the exception of Chromium (VI) which is dissolved).
[4] The above-noted substances are probable or known human carcinogens. If an effluent contains more than one of these substances, the additivity provisions contained in 327 IAC 5-2-11.4(a)(4)(A) shall be applied. This spreadsheet automatically applies these additivity provisions by reducing each human health wasteload allocation for a carcinogen by an equal amount. This allocation between carcinogens can be altered on a case-specific basis.
[5] The above-noted substance is a chlorinated dibenzo-p-dioxin. If an effluent contains more than one chlorinated dibenzo-p-dioxin or chlorinated dibenzofuran, the additivity provisions contained in 327 IAC 5-2-11.4(a)(4)(C) shall be applied.
[6] The above-noted substances are bioaccumulative chemicals of concern (BCCs). Dilution is not allowed for new discharges of BCCs to streams and for any discharges of BCCs to the open waters of Lake Michigan. Dilution is not allowed for existing discharges of BCCs to streams after January 1, 2004 unless the discharge meets an exception. To not allow for dilution for BCCs, place a "Y" in the "BCC" column.
[7] Limits based on estimated ambient screening values (as indicated by EASV) ARE NOT to be used as water quality-based effluent limitations. These are solely to be used as preliminary effluent limitations.
[8] The preliminary effluent limitations calculated using the additional criteria for Lake Michigan were calculated using 100% of the Q7,10 flow.

Last revised: 10 February 2009

ATTACHMENT 17
U.S. Steel - Midwest Plant Data From Form 2C

Parameter	Intake (mg/l)	Outfall 002 (mg/l)	Outfall 003 (mg/l)	Outfall 104 (mg/l)	Outfall 004 (mg/l)
Aluminum	0.064	0.065	0.12	0.054	<0.03
Ammonia-N	<0.05	<0.05	<0.05	<0.05	<0.05
Antimony	<0.03	-	-	<0.03	<0.03
Arsenic	<0.01	-	-	<0.01	<0.01
Barium	0.018	0.02	0.02	<0.01	<0.01
Beryllium	<0.005	-	-	<0.005	<0.005
Boron	0.029	0.022	0.22	0.032	0.03
Cadmium	<0.005	-	-	<0.005	<0.005
Chloride	-	-	-	-	-
Total Residual Chlorine	<0.02	0.05	<0.05	0.05	0.05
Total Chromium	<0.01	-	-	0.14	<0.01
Hexavalent Chromium	-	-	-	-	-
Cobalt	<0.01	<0.01	<0.01	<0.01	<0.01
Copper	<0.01	-	-	<0.01	<0.01
Free Cyanide	-	-	-	-	-
Total Cyanide	<0.005	-	-	0.042	<0.02
Fluoride	<0.1	0.16	0.15	0.86	0.93
Iron	0.22	0.14	0.23	2.5	0.36
Lead	<0.02	-	-	0.122	<0.02
Manganese	<0.01	0.017	0.018	0.16	0.1
Mercury	-	-	-	-	-
Molybdenum	<0.01	<0.01	<0.01	0.01	<0.01
Nickel	<0.01	-	-	<0.01	<0.01
Selenium	<0.005	-	-	<0.005	<0.005
Silver	<0.01	-	-	<0.01	<0.01
Sulfate	20.4	21	23	295.8	89
Thallium	<0.04	-	-	<0.004	<0.04
Tin	<0.02	<0.02	<0.02	<0.02	<0.02
Titanium	<0.01	<0.01	<0.01	<0.01	<0.01
Zinc	0.011	-	-	0.089	<0.01
Bis(2-ethylhexyl)phthalate	<0.01	-	-	<0.01	<0.01
Ethylbenzene	<0.005	-	-	<0.005	<0.005
Naphthalene	<0.01	-	-	<0.01	<0.01
Phenol	<0.01	-	-	<0.01	<0.01
Total Phenols	<0.004	-	-	<0.011	<0.004
Tetrachloroethylene	<0.005	-	-	<0.005	<0.005
Toluene	<0.005	-	-	<0.005	<0.005
1,1,1-Trichloroethane	<0.005	-	-	<0.005	<0.005

ATTACHMENT 18 - A
U.S. Steel - Midwest Plant Data From Additional Sampling in September 2001

Parameter	Intake (mg/l)	Outfall 002 (mg/l)	Outfall 003 (mg/l)	Outfall 004 (mg/l)
Aluminum	-	-	-	-
Ammonia-N	0.072	0.15	0.082	0.061
Antimony	<0.0019	<0.0019	<0.0019	<0.0019
Arsenic	<0.0024	<0.0024	<0.0024	<0.0024
Barium	-	-	-	-
Beryllium	-	-	-	-
Boron	-	-	-	-
Cadmium	-	-	-	-
Chloride	12	12	11	55
Total Residual Chlorine	<0.1	<0.1	<0.1	<0.1
Total Chromium	<0.0029	<0.0029	<0.0029	0.23
Hexavalent Chromium	-	-	-	-
Cobalt	<0.002	<0.002	<0.002	<0.002
Copper	-	-	-	-
Free Cyanide	0.06	0.09	0.011	<0.002
Total Cyanide	<0.002	<0.002	<0.002	<0.002
Fluoride	0.12	0.18	0.12	0.32
Iron	0.058	0.033	0.48	2
Lead	-	-	-	-
Manganese	-	-	-	-
Mercury	-	-	-	-
Molybdenum	-	-	-	-
Nickel	<0.0058	<0.0058	<0.0058	0.13
Selenium	<0.003	<0.003	<0.003	<0.003
Silver	<0.0023	<0.0023	<0.0023	<0.0023
Sulfate	-	-	-	-
Thallium	<0.00062	<0.00062	<0.00062	<0.00062
Tin	-	-	-	-
Titanium	<0.02	<0.02	<0.02	<0.02
Zinc	<0.0027	0.007	<0.0027	0.075
Bis(2-ethylhexyl)phthalate	-	-	-	-
Ethylbenzene	-	-	-	<0.005
Naphthalene	-	-	-	<0.01
Phenol	-	-	-	<0.01
Total Phenols	<0.005	<0.005	<0.005	<0.005
Tetrachloroethylene	-	-	-	<0.005
Toluene	-	-	-	<0.005
1,1,1-Trichloroethane	-	-	-	<0.005

ATTACHMENT 18 - B
U.S. Steel - Midwest Plant Data From Additional Sampling in 2010

	Total Recoverable Copper			Dissolved Copper		
Date	Intake (mg/l)	Outfall 002 (mg/l)	Outfall 003 (mg/l)	Intake (mg/l)	Outfall 002 (mg/l)	Outfall 003 (mg/l)
4/15/2010	0.0023	0.0041	0.0028	0.0015	0.0033	0.0020
4/20/2010	0.00086	0.0018	0.0024	0.00072	0.0014	0.0021
4/27/2010	0.0019	0.0022	0.0024	0.0017	0.0017	0.0032
5/4/2010	0.0015	0.0011	0.0020	0.00084	0.00076	0.0015
5/11/2010	0.00070	0.0028	0.0023	0.00053	0.0024	0.0019
5/18/2010	0.00098	0.0014	0.0021	0.00073	0.0010	0.0018

LOD = 0.00031 mg/l
LOQ = 0.0020 mg/l

	Total Recoverable Lead			Dissolved Lead		
Date	Intake (mg/l)	Outfall 002 (mg/l)	Outfall 003 (mg/l)	Intake (mg/l)	Outfall 002 (mg/l)	Outfall 003 (mg/l)
4/15/2010	0.0014	0.00029	0.00031	<0.00025	<0.00025	<0.00025
4/20/2010	0.00072	<0.00025	<0.00025	<0.00025	<0.00025	<0.00025
4/27/2010	0.00077	0.00028	<0.00025	<0.00025	<0.00025	<0.00025
5/4/2010	0.0017	<0.00025	<0.00025	<0.00025	<0.00025	<0.00025
5/11/2010	0.00025	0.00025	<0.00025	<0.00025	<0.00025	<0.00025
5/18/2010	0.00031	<0.00025	<0.00025	<0.00025	<0.00025	<0.00025

LOD = 0.00025 mg/l
LOQ = 0.00050 mg/l

ATTACHMENT 19

U.S. Steel - Midwest Plant Data From Additional Sampling for Internal Outfall 104*

Parameter	3/5/2008 (mg/l)	3/12/2008 (mg/l)	3/27/2008 (mg/l)	4/23/2008 (mg/l)
Iron, Dissolved	0.033	0.04	<0.0022	<0.0084
Cadmium, Total	<0.000055	<0.000055	<0.000055	<0.00023
Cadmium, Dissolved	<0.000055	0.000057 J	<0.000055	<0.00023
Chromium, Total	0.015	0.031	0.034	0.039
Chromium, Dissolved	<0.0001	0.00014 J	<0.0001	<0.00049
Copper, Total	0.0017	0.0044	0.00082 J	0.0016 J
Copper, Dissolved	0.0004 J	0.00029 J	0.00047 J	<0.00061
Lead, Total	0.00022 J	0.00027 J	0.00039 J	<0.00006
Lead, Dissolved	<0.00021	0.00031 J	<0.00021	<0.00006
Mercury, Total	0.000000274 J	0.000000268 J	0.000000231 J	not sampled
Nickel, Total	0.0054	0.005	0.0032	0.0052 J
Nickel, Dissolved	0.0047	0.0041	0.0035	0.0038 J
Selenium, Total	0.00041 J	<0.00019	0.00031 J	<0.00012
Selenium, Dissolved	<0.00019	<0.00019	0.00048 J	<0.00012
Silver, Total	<0.00005	<0.00005	<0.00005	<0.00055
Silver, Dissolved	<0.00005	<0.00005	<0.00005	<0.00055
Zinc, Total	0.0062	0.0083	0.0086	0.0089
Zinc, Dissolved	0.0034 J	0.002 J	0.0034 J	<0.0027
Tetrachloroethylene	<0.00024	<0.00024	<0.00024	<0.00024
Naphthalene	<0.00011	<0.00011	<0.0001	<0.00011
Chloride	140	120	110	120
Fluoride	0.42	0.65	0.45	0.64
Sulfate as SO4	260	270	230	190
Sulfide	<1.3	<1.3	<1.3	<1.3
Free Cyanide (WAD)	<0.0019	0.0019 J	<0.0019	0.0025
Cyanide, Total	<0.0022	<0.0022	<0.0022	<0.0022
Chromium, Hexavalent	<0.0005	<0.0005	<0.0005	0.00054

* Results were reported to the limit of detection (LOD). Sample results denoted with a "J" were between the LOD and the limit of quantitation (LOQ).

ATTACHMENT 20 - A
U.S. Steel - Midwest Plant Data From Additional Sampling for Outfall 004*

Parameter	3/5/2008 (mg/l)	3/12/2008 (mg/l)	3/27/2008 (mg/l)	4/23/2008 (mg/l)
Iron, Dissolved	0.024 J	0.019 J	<0.0022	<0.0084
Cadmium, Total	<0.000055	<0.000055	<0.000055	<0.00023
Cadmium, Dissolved	<0.000055	<0.000055	0.000072 J	<0.00023
Chromium, Total	0.0091	0.0079	0.01	0.012
Chromium, Dissolved	<0.0001	<0.0001	0.0002 J	0.00063 J
Copper, Total	0.0017	0.0017	0.00081 J	<0.00061
Copper, Dissolved	0.00067 J	0.00048 J	0.00053 J	<0.00061
Lead, Total	0.00026 J	<0.00021	0.00026 J	<0.00006
Lead, Dissolved	<0.00021	<0.00021	<0.00021	<0.00006
Mercury, Total	0.000000571	0.000000563	0.000000603	not sampled
Nickel, Total	0.0032	0.0029	0.0021	0.004 J
Nickel, Dissolved	0.0026	0.0025	0.0028	0.0018 J
Selenium, Total	0.00038 J	<0.00019	0.00023	<0.00012
Selenium, Dissolved	<0.00019	<0.00019	0.00036	0.00018 J
Silver, Total	<0.00005	<0.00005	<0.00005	<0.00055
Silver, Dissolved	<0.00005	<0.00005	<0.00005	<0.00055
Zinc, Total	0.0063	0.007	0.0053	0.0045 J
Zinc, Dissolved	0.0057	0.0047 J	0.003 J	<0.0027
Tetrachloroethylene	<0.00024	<0.00024	<0.00024	<0.00024
Naphthalene	<0.0001	<0.0001	<0.00011	<0.0001
Chloride	86	86	74	89
Fluoride	0.37	0.48	0.38	0.5
Sulfate as SO4	140	150	140	110
Sulfide	<1.3	<1.3	<1.3	<1.3
Free Cyanide (WAD)	<0.0019	0.0033 J	<0.0019	0.0026
Cyanide, Total	<0.0022	<0.0022	<0.0022	<0.0022
Chromium, Hexavalent	<0.0005	<0.0005	0.00086	<0.0005

* Results were reported to the limit of detection (LOD). Sample results denoted with a "J" were between the LOD and the limit of quantitation (LOQ).

ATTACHMENT 20 - B

U.S. Steel - Midwest Plant Data From Additional Sampling for Outfall 004

Date	Total Mercury (ng/l)			
	Sample	Duplicate	Daily	Monthly Average
3/5/2008	0.57	--	0.57	0.58
3/12/2008	0.56	--	0.56	
3/27/2008	0.60	--	0.60	
6/23/2009	<0.14	<0.14	0.14	0.33
6/30/2009	0.52	--	0.52	
7/23/2009	0.19	0.18	0.19	0.24
7/29/2009	0.28	--	0.28	
8/11/2009	0.41	0.44	0.43	0.29
8/24/2009	0.14	--	0.14	
9/3/2009	0.29	0.34	0.32	0.35
9/22/2009	0.37	--	0.37	
10/7/2009	0.21	0.20	0.21	0.22
10/21/2009	0.22	--	0.22	
11/4/2009	0.58	0.48	0.53	0.38
11/22/2009	0.22	--	0.22	
12/2/2009	0.19	0.23	0.21	0.22
12/17/2009	0.23	--	0.23	
1/14/2010	0.23	0.25	0.24	0.21
1/26/2010	0.17	--	0.17	
2/4/2010	0.17	0.18	0.18	0.18
2/18/2010	0.17	--	0.17	
3/4/2010	0.40	0.26	0.33	
Reasonable Potential Analysis		**n**	**22**	**10**
		CV	**0.5**	**0.4**
		max	**0.60**	**0.58**

ATTACHMENT 21
U.S. Steel - Midwest Plant Internal Outfall 104 Data

	Chloride (mg/l)			Hexavalent Chromium (mg/l)		
Date	Daily	Adjusted Daily	Monthly Average	Daily	Adjusted Daily	Monthly Average
Oct-05	75	75	98	<0.01	0.01	0.010
	52	52		<0.01	0.01	
	158	158		<0.01	0.01	
	95	95		<0.01	0.01	
	109	109				
Nov-05	111	111	87	<0.01	0.01	0.010
	80	80		<0.01	0.01	
	81	81		<0.01	0.01	
	76	76		<0.01	0.01	
Dec-05	90	90	79	<0.01	0.01	0.010
	78	78		<0.01	0.01	
	80	80		<0.01	0.01	
	68	68		<0.01	0.01	
				<0.01	0.01	
Jan-06	88	88	92	<0.01	0.01	0.010
	115	115		<0.01	0.01	
	68	68		<0.01	0.01	
	107	107		<0.01	0.01	
	81	81				
Feb-06	80	80	83	<0.01	0.01	0.010
	82	82		<0.01	0.01	
	86	86		<0.01	0.01	
	84	84		<0.01	0.01	
Mar-06	94	94	83	<0.01	0.01	0.010
	70	70		<0.01	0.01	
	78	78		<0.01	0.01	
	90	90		<0.01	0.01	
				<0.01	0.01	
Apr-06	118	118	121	<0.01	0.01	0.010
	134	134		<0.01	0.01	
	112	112		<0.01	0.01	
	121	121		<0.01	0.01	
May-06	110	110	111	<0.01	0.01	0.010
	93	93		<0.01	0.01	
	107	107		<0.01	0.01	
	124	124		<0.01	0.01	
	119	119				
Jun-06	116	116	101	<0.01	0.01	0.010
	114	114		<0.01	0.01	
	72	72		<0.01	0.01	
	100	100		<0.01	0.01	
				<0.01	0.01	
Jul-06	91	91	96	<0.01	0.01	0.010
	103	103		<0.01	0.01	

Date	Chloride (mg/l) Daily	Adjusted Daily	Monthly Average	Hexavalent Chromium (mg/l) Daily	Adjusted Daily	Monthly Average
	96	96		<0.01	0.01	
	101	101		<0.01	0.01	
	90	90				
Aug-06	60	60	85	<0.01	0.01	0.010
	70	70		<0.01	0.01	
	112	112		<0.01	0.01	
	97	97		<0.01	0.01	
Sep-06	84	84	89	<0.01	0.01	0.010
	84	84		<0.01	0.01	
	94	94		<0.01	0.01	
	94	94		<0.01	0.01	
				<0.01	0.01	
Oct-06	99	99	94	<0.01	0.01	0.010
	63	63		<0.01	0.01	
	114	114		<0.01	0.01	
	86	86		<0.01	0.01	
	108	108				
Nov-06	93	93	104	<0.01	0.01	0.010
	117	117		<0.01	0.01	
	110	110		<0.01	0.01	
	97	97		<0.01	0.01	
Dec-06	88	88	103	<0.01	0.01	0.010
	94	94		<0.01	0.01	
	123	123		<0.01	0.01	
	105	105		<0.01	0.01	
				<0.01	0.01	
Jan-07	118	118	126	<0.01	0.01	0.010
	142	142		<0.01	0.01	
	112	112		<0.01	0.01	
	124	124		<0.01	0.01	
	135	135				
Feb-07	147	147	108	<0.01	0.01	0.010
	100	100		<0.01	0.01	
	105	105		<0.01	0.01	
	80	80		<0.01	0.01	
Mar-07	116	116	117	<0.01	0.01	0.010
	126	126		<0.01	0.01	
	99	99		<0.01	0.01	
	126	126		<0.01	0.01	
				<0.01	0.01	
Apr-07	118	118	118	<0.01	0.01	0.010
	114	114		<0.01	0.01	
	101	101		<0.01	0.01	
	85	85		<0.01	0.01	
	170	170				
May-07	93	93	99	<0.01	0.01	0.010
	100	100		<0.01	0.01	
	101	101		<0.01	0.01	

Date	Chloride (mg/l) Daily	Adjusted Daily	Monthly Average	Hexavalent Chromium (mg/l) Daily	Adjusted Daily	Monthly Average
	100	100		<0.01	0.01	
Jun-07	125	125	112	<0.01	0.01	0.010
	105	105		<0.01	0.01	
	114	114		<0.01	0.01	
	104	104		<0.01	0.01	
				<0.01	0.01	
Jul-07	123	123	132	<0.01	0.01	0.010
	110	110		<0.01	0.01	
	169	169		<0.01	0.01	
	129	129		<0.01	0.01	
	131	131				
Aug-07	86	86	119	<0.01	0.01	0.010
	170	170		<0.01	0.01	
	128	128		<0.01	0.01	
	92	92		<0.01	0.01	
				<0.01	0.01	
Sep-07	122	122	112	<0.01	0.01	0.010
	141	141		<0.01	0.01	
	96	96		<0.01	0.01	
	88	88		<0.01	0.01	
Oct-07	87	87	98	<0.01	0.01	0.010
	124	124		<0.01	0.01	
	88	88		<0.01	0.01	
	77	77		<0.01	0.01	
	116	116				
Nov-07	101	101	90	<0.01	0.01	0.010
	79	79		<0.01	0.01	
	76	76		<0.01	0.01	
	105	105		<0.01	0.01	
				<0.01	0.01	
Dec-07	123	123	105	<0.01	0.01	0.010
	84	84		<0.01	0.01	
	108	108		<0.01	0.01	
	120	120		<0.01	0.01	
	90	90				
Jan-08	113	113	123	<0.01	0.01	0.010
	115	115		<0.01	0.01	
	97	97		<0.01	0.01	
	165	165		<0.01	0.01	
Feb-08	103	103	124	<0.01	0.01	0.010
	175	175		<0.01	0.01	
	128	128		<0.01	0.01	
	90	90		<0.01	0.01	
				<0.01	0.01	
Mar-08	95	95	110	<0.01	0.01	0.010
	102	102		<0.01	0.01	
	94	94		<0.01	0.01	
	104	104		<0.01	0.01	

Date	Chloride (mg/l) Daily	Adjusted Daily	Monthly Average	Hexavalent Chromium (mg/l) Daily	Adjusted Daily	Monthly Average
	156	156				
Apr-08	113	113	131	<0.01	0.01	0.010
	133	133		<0.01	0.01	
	166	166		<0.01	0.01	
	110	110		<0.01	0.01	
May-08	183	183	166	<0.01	0.01	0.010
	188	188		<0.01	0.01	
	168	168		<0.01	0.01	
	125	125		<0.01	0.01	
				<0.01	0.01	
Jun-08	113	113	141	<0.01	0.01	0.010
	169	169		<0.01	0.01	
	130	130		<0.01	0.01	
	114	114		<0.01	0.01	
	178	178				
Jul-08	140	140	129	<0.01	0.01	0.010
	130	130		<0.01	0.01	
	150	150		<0.01	0.01	
	94	94		<0.01	0.01	
Aug-08	108	108	105	<0.01	0.01	0.010
	69	69		<0.01	0.01	
	99	99		<0.01	0.01	
	144	144		<0.01	0.01	
				<0.01	0.01	
Sep-08	130	130	116	<0.01	0.01	0.010
	130	130		<0.01	0.01	
	93	93		<0.01	0.01	
	135	135		<0.01	0.01	
	94	94				
Outlier Analysis	**mean**	**108.6**		**mean**	**0.010**	
	std	**26.7**		**std**	**0.000**	
	mean + 3std	**188.7**		**mean + 3std**	**0.010**	
Reasonable Potential Analysis	**n**	**157**	**36**	**n**	**156**	**36**
	CV	**0.2**	**0.2**	**CV**	**0.0**	**0.0**
	max	**188**	**166**	**max**	**0.01**	**0.01**

ATTACHMENT 22
U.S. Steel - Midwest Plant Internal Outfall 104 Data

	Fluoride (mg/l)			Net Sulfate (mg/l)		
Date	Daily	Adjusted Daily	Monthly Average	Daily	Adjusted Daily	Monthly Average
Oct-05	0.19	0.19	0.23	180	180	150
	0.25	0.25		134	134	
	0.25	0.25		169	169	
	0.25	0.25		118	118	
	0.2	0.2				
Nov-05	0.21	0.21	0.24	209	209	215
	0.25	0.25		242	242	
	0.25	0.25		212	212	
	0.25	0.25		198	198	
Dec-05	0.2	0.2	0.22	174	174	266
	0.25	0.25		331	331	
	0.25	0.25		256	256	
	0.17	0.17		251	251	
				319	319	
Jan-06	0.25	0.25	0.23	241	241	261
	0.21	0.21		243	243	
	0.2	0.2		306	306	
	0.25	0.25		255	255	
	0.22	0.22				
Feb-06	0.25	0.25	0.25	201	201	187
	0.25	0.25		194	194	
	0.25	0.25		171	171	
	0.25	0.25		182	182	
Mar-06	0.19	0.19	0.24	203	203	177
	0.25	0.25		153	153	
	0.25	0.25		178	178	
	0.25	0.25		168	168	
				184	184	
Apr-06	0.25	0.25	0.31	229	229	203
	0.25	0.25		203	203	
	0.25	0.25		207	207	
	0.47	0.47		172	172	
May-06	0.21	0.21	0.24	142	142	153
	0.25	0.25		180	180	
	0.25	0.25		147	147	
	0.25	0.25		141	141	
	0.25	0.25				
Jun-06	0.21	0.21	0.27	163	163	183
	0.35	0.35		159	159	
	0.25	0.25		201	201	
	0.25	0.25		198	198	
				193	193	
Jul-06	0.25	0.25	0.28	195	195	211
	0.25	0.25		255	255	

Date	Fluoride (mg/l) Daily	Adjusted Daily	Monthly Average	Net Sulfate (mg/l) Daily	Adjusted Daily	Monthly Average
	0.39	0.39		188	188	
	0.31	0.31		204	204	
	0.18	0.18				
Aug-06	0.25	0.25	0.24	189	189	192
	0.25	0.25		151	151	
	0.25	0.25		204	204	
	0.22	0.22		218	218	
				198	198	
Sep-06	0.19	0.19	0.21	226	226	208
	0.18	0.18		233	233	
	0.21	0.21		194	194	
	0.25	0.25		179	179	
Oct-06	0.19	0.19	0.22	158	158	192
	0.16	0.16		169	169	
	0.25	0.25		219	219	
	0.25	0.25		220	220	
	0.25	0.25				
Nov-06	0.22	0.22	0.25	266	266	248
	0.25	0.25		257	257	
	0.3	0.3		264	264	
	0.24	0.24		250	250	
				201	201	
Dec-06	0.25	0.25	0.22	220	220	238
	0.21	0.21		281	281	
	0.24	0.24		231	231	
	0.19	0.19		220	220	
Jan-07	0.21	0.21	0.23	198	198	220
	0.25	0.25		225	225	
	0.22	0.22		227	227	
	0.24	0.24		228	228	
	0.24	0.24				
Feb-07	0.24	0.24	0.24	192	192	209
	0.25	0.25		244	244	
	0.25	0.25		203	203	
	0.22	0.22		198	198	
Mar-07	0.25	0.25	0.25	198	198	236
	0.26	0.26		252	252	
	0.25	0.25		243	243	
	0.23	0.23		301	301	
				188	188	
Apr-07	0.2	0.2	0.22	205	205	231
	0.21	0.21		318	318	
	0.25	0.25		213	213	
	0.25	0.25		187	187	
	0.2	0.2				
May-07	0.25	0.25	0.25	233	233	211
	0.25	0.25		246	246	
	0.25	0.25		216	216	

Date	Fluoride (mg/l) Daily	Adjusted Daily	Monthly Average	Net Sulfate (mg/l) Daily	Adjusted Daily	Monthly Average
	0.25	0.25		156	156	
				206	206	
Jun-07	0.25	0.25	0.25	177	177	197
	0.25	0.25		194	194	
	0.25	0.25		213	213	
	0.25	0.25		202	202	
Jul-07	0.25	0.25	0.27	144	144	158
	0.25	0.25		149	149	
	0.37	0.37		174	174	
	0.25	0.25		164	164	
	0.25	0.25				
Aug-07	0.25	0.25	0.25	214	214	247
	0.25	0.25		329	329	
	0.25	0.25		204	204	
	0.25	0.25		264	264	
				222	222	
Sep-07	0.25	0.25	0.25	162	162	161
	0.25	0.25		184	184	
	0.25	0.25		145	145	
	0.25	0.25		153	153	
Oct-07	0.25	0.25	0.25	236	236	239
	0.25	0.25		277	277	
	0.25	0.25		207	207	
	0.25	0.25		235	235	
	0.27	0.27				
Nov-07	0.25	0.25	0.25	190	190	224
	0.25	0.25		182	182	
	0.25	0.25		216	216	
	0.25	0.25		265	265	
				267	267	
Dec-07	0.27	0.27	0.25	217	217	238
	0.25	0.25		262	262	
	0.25	0.25		224	224	
	0.21	0.21		247	247	
	0.25	0.25				
Jan-08	0.25	0.25	0.25	230	230	209
	0.25	0.25		218	218	
	0.25	0.25		205	205	
	0.25	0.25		196	196	
				196	196	
Feb-08	0.25	0.25	0.29	271	271	239
	0.41	0.41		267	267	
	0.25	0.25		191	191	
	0.25	0.25		225	225	
Mar-08	0.25	0.25	0.25	216	216	215
	0.25	0.25		275	275	
	0.25	0.25		192	192	
	0.25	0.25		178	178	

Date	Fluoride (mg/l) Daily	Adjusted Daily	Monthly Average	Net Sulfate (mg/l) Daily	Adjusted Daily	Monthly Average
	0.25	0.25				
Apr-08	0.25	0.25	0.26	170	170	154
	0.25	0.25		174	174	
	0.26	0.26		133	133	
	0.26	0.26		140	140	
May-08	0.25	0.25	0.25	199	199	178
	0.25	0.25		211	211	
	0.25	0.25		170	170	
	0.25	0.25		163	163	
				147	147	
Jun-08	0.25	0.25	0.28	146	146	174
	0.25	0.25		169	169	
	0.25	0.25		187	187	
	0.25	0.25		193	193	
	0.38	0.38				
Jul-08	0.25	0.25	0.30	157	157	164
	0.25	0.25		176	176	
	0.3	0.3		202	202	
	0.4	0.4		143	143	
				140	140	
Aug-08	0.25	0.25	0.25	156	156	150
	0.25	0.25		156	156	
	0.25	0.25		147	147	
	0.25	0.25		139	139	
Sep-08	0.25	0.25	0.25	247	247	222
	0.26	0.26		240	240	
	0.26	0.26		195	195	
	0.25	0.25		204	204	
	0.25	0.25				
Outlier Analysis	**mean**	**0.249**		**mean**	**204.9**	
	std	**0.039**		**std**	**42.6**	
	mean + 3std	**0.367**		**mean + 3std**	**332.7**	
Reasonable Potential Analysis	**n**	**157**	**36**	**n**	**156**	**36**
	CV	**0.2**	**0.1**	**CV**	**0.2**	**0.2**
	max	**0.47**	**0.31**	**max**	**331**	**266**

ATTACHMENT 23
U.S. Steel - Midwest Plant Internal Outfall 104 Data

	Total Lead (mg/l)		Naphthalene (mg/l)		Tetrachloroethylene (mg/l)	
Date	Daily	Adjusted Daily	Daily	Adjusted Daily	Daily	Adjusted Daily
Oct-05	<0.03	0.03				
Nov-05			<0.01	0.01	<0.005	0.005
Jan-06	<0.03	0.03				
Feb-06			<0.001		<0.0005	
Mar-06	<0.03	0.03				
Apr-06	<0.03	0.03				
May-06			<0.01	0.01	<0.005	0.005
Jul-06	<0.03	0.03				
Aug-06			<0.01	0.01	<0.005	0.005
Oct-06	<0.03	0.03	<0.01	0.01	<0.005	0.005
Jan-07	<0.03	0.03	<0.01	0.01	<0.005	0.005
Apr-07	<0.03	0.03	<0.01	0.01	<0.005	0.005
Jul-07			<0.01	0.01	<0.005	0.005
Oct-07	<0.03	0.03	<0.01	0.01	<0.005	0.005
Jan-08	<0.03	0.03	<0.01	0.01	<0.005	0.005
Feb-08	<0.03	0.03	<0.01	0.01	<0.005	0.005
Jul-08	<0.03	0.03	<0.01	0.01	<0.005	0.005
Outlier Analysis	mean	0.030	mean	0.010	mean	0.0050
	std	0.000	std	0.000	std	0.0000
	mean + 3std	0.030	mean + 3std	0.010	mean + 3std	0.0050
Reasonable Potential Analysis	n	12	n	11	n	11
	CV	0.0	CV	0.0	CV	0.0
	max	0.03	max	0.01	max	0.005

ATTACHMENT 24

Reasonable Potential Statistical Procedure for U.S. Steel - Midwest Plant Using Outfall 004 Data

6/8/2016
5:12 PM

(calculated in accordance with 327 IAC 5-2-11.5)		Monthly Average Determination							Daily Maximum Determination						
Parameters	WQBELs Required*	Maximum Monthly Average (ug/l)	Number of Monthly Averages	CV	MF	PEQ (ug/l)	PEL (ug/l)	PEQ > PEL?	Maximum Daily Sample (ug/l)	Number of Daily Samples	CV	MF	PEQ (ug/l)	PEL (ug/l)	PEQ > PEL?
Antimony	No					12	99	No	1.9	1	0.6	6.2	12	200	No
Arsenic III	No					15	180	No	2.4	1	0.6	6.2	15	370	No
Barium	No					62	1500	No	10	1	0.6	6.2	62	3100	No
Beryllium	No					31	37	No	5	1	0.6	6.2	31	74	No
Cadmium	No	0.055	1	0.6	6.2	0.34	7.7	No	0.23	4	0.6	2.6	0.6	13	No
Chromium (VI)	No	0.62	1	0.6	6.2	3.8	14	No	0.86	4	0.6	2.6	2.2	27	No
Total Chromium	No	9	1	0.6	6.2	56	260	No	220	6	0.6	2.1	480	510	No
Cobalt	No					12	23	No	2	1	0.6	6.2	12	47	No
Copper	No	1.4	1	0.6	6.2	8.7	30	No	1.7	4	0.6	2.6	4.4	52	No
Lead	No	0.24	1	0.6	6.2	1.5	28	No	0.26	4	0.6	2.6	0.68	55	No
Manganese	No					620	1500	No	100	1	0.6	6.2	620	3100	No
Mercury	No	0.00058	10	0.4	1.5	0.00087	0.0013	No	0.0006	22	0.5	1.3	0.00078	0.0032	No
Molybdenum	No					62	990	No	10	1	0.6	6.2	62	2000	No
Nickel	No	2.7	1	0.6	6.2	17	150	No	130	6	0.6	2.1	270	300	No
Selenium	No	0.27	1	0.6	6.2	1.7	5.7	No	0.38	4	0.6	2.6	0.99	12	No
Silver	Yes II	0.05	1	0.6	6.2	0.31	0.076	Yes	0.05	3	0.6	3.0	0.15	0.13	Yes
Thallium	No					3.8	7.4	No	0.62	1	0.6	6.2	3.8	15	No
Tin	No					120	170	No	20	1	0.6	6.2	120	340	No
Titanium	No					62	3100	No	10	1	0.6	6.2	62	6200	No
Vanadium															
Zinc	No	6.2	1	0.6	6.2	38	270	No	75	6	0.6	2.1	160	550	No
Ethylbenzene	No					19	140	No	5	2	0.6	3.8	19	270	No
Naphthalene	No	0.1	1	0.6	6.2	0.62	32	No	0.11	4	0.6	2.6	0.29	65	No
Phenol	No					38	220	No	10	2	0.6	3.8	38	450	No
Tetrachloroethylene	No	0.24	1	0.6	6.2	1.5	74	No	0.24	4	0.6	2.6	0.62	150	No
Toluene	No					19	120	No	5	2	0.6	3.8	19	230	No
1,1,1-Trichloroethane	No					19	510	No	5	2	0.6	3.8	19	1000	No
Total Ammonia (as N)															
Summer	No					230	1300	No	61	2	0.6	3.8	230	3100	No
Winter	No					230	1600	No	61	2	0.6	3.8	230	3200	No
Boron	No					190	2000	No	30	1	0.6	6.2	190	3900	No
Chloride	No+	82000	1	0.6	6.2	508000	257000	Yes	89000	5	0.6	2.3	205000	516000	No
Cyanide, Free	Yes I	2.4	1	0.6	6.2	15	7.5	Yes	3.3	4	0.6	2.6	8.6	15	No
Cyanide, Total	No	2.2	1	0.6	6.2	14	116000	No	2.2	4	0.6	2.6	5.7	281000	No
Fluoride															
Sulfate															
Additional Criteria for Lake Michigan															
Sulfate	No+	143000	1	0.6	6.2	887000	514000	Yes	150000	5	0.6	2.3	345000	1032000	No
Fluoride	No+	410	1	0.6	6.2	2500	1700	Yes	930	6	0.6	2.1	2000	3500	No

*WQBELs Required:

[1] "Yes I" means that a projected effluent quality (PEQ) exceeded a preliminary effluent limitation (PEL) based on a Tier I criterion and WQBELs must be included in the NPDES permit.
[2] "Yes II" means that a PEQ exceeded a PEL based on a Tier II value and WQBELs must be included in the NPDES permit.
[3] "No" means that a PEQ did not exceed a PEL and WQBELs do not have to be included in the NPDES permit based on the reasonable potential statistical procedure.
[4] "No+" means that the reasonable potential analysis using internal Outfall 104 data was considered to be more representative and was used to determine whether WQBELs must be included in the NPDES permit based on the reasonable potential statistical procedure.
[5] "Data" means that a PEQ exceeded a PEL based on an "estimated ambient screening value" and the permittee must generate sufficient data to develop a Tier I criterion or Tier II value for the parameter.

ATTACHMENT 25

Reasonable Potential Statistical Procedure for U.S. Steel - Midwest Plant Using Internal Outfall 104 Data

2/27/2009
1:55 PM

(calculated in accordance with 327 IAC 5-2-11.5)		Monthly Average Determination							Daily Maximum Determination						
Parameters	WQBELs Required*	Maximum Monthly Average (ug/l)	Number of Monthly Averages	CV	MF	PEQ (ug/l)	PEL (ug/l)	PEQ > PEL?	Maximum Daily Sample (ug/l)	Number of Daily Samples	CV	MF	PEQ (ug/l)	PEL (ug/l)	PEQ > PEL?
Antimony															
Arsenic III															
Barium															
Beryllium															
Cadmium															
Chromium (VI)	No	10	36	0.0	1.0	10	14	No	10	156	0.0	1.0	10	27	No
Total Chromium	No	35	35	0.0	1.0	35	260	No	59	782	0.1	1.0	59	510	No
Cobalt															
Copper															
Lead	No+					30	28	Yes	30	12	0.0	1.0	30	55	No
Manganese															
Mercury															
Molybdenum															
Nickel															
Selenium															
Silver															
Thallium															
Tin															
Titanium															
Vanadium															
Zinc	No	32	35	0.0	1.0	32	270	No	79	782	0.1	1.0	79	550	No
Ethylbenzene															
Naphthalene	No					10	32	No	10	11	0.0	1.0	10	65	No
Phenol															
Tetrachloroethylene	No					5	74	No	5	11	0.0	1.0	5	150	No
Toluene															
1,1,1-Trichloroethane															
Total Ammonia (as N)															
Summer															
Winter															
Boron															
Chloride	No	166000	36	0.2	1.0	166000	257000	No	188000	157	0.2	1.0	188000	516000	No
Cyanide, Free	Yes I	22	35	0.0	1.0	22	7.5	Yes	50	782	0.1	1.0	50	13	Yes
Cyanide, Total	No	22	35	0.0	1.0	22	116000	No	50	782	0.1	1.0	50	281000	No
Fluoride															
Sulfate															
Additional Criteria for Lake Michigan															
Sulfate	No	290000	36	0.2	1.0	290000	514000	No	357000	156	0.2	1.0	357000	1032000	No
Fluoride	No	310	36	0.1	1.0	310	1700	No	470	157	0.2	1.0	470	3500	No

*WQBELs Required:

[1] "Yes I" means that a projected effluent quality (PEQ) exceeded a preliminary effluent limitation (PEL) based on a Tier I criterion and WQBELs must be included in the NPDES permit.
[2] "Yes II" means that a PEQ exceeded a PEL based on a Tier II value and WQBELs must be included in the NPDES permit.
[3] "No" means that a PEQ did not exceed a PEL and WQBELs do not have to be included in the NPDES permit based on the reasonable potential statistical procedure.
[4] "No+" means that the reasonable potential analysis using Outfall 004 data was considered to be more representative and was used to determine whether WQBELs must be included in the NPDES permit based on the reasonable potential statistical procedure.
[5] "Data" means that a PEQ exceeded a PEL based on an "estimated ambient screening value" and the permittee must generate sufficient data to develop a Tier I criterion or Tier II value for the parameter.

ATTACHMENT 26
U.S. Steel - Midwest Plant Outfall 004
Whole Effluent Toxicity Data

Species: *Ceriodaphnia dubia*

Date	LC50 (%)	Acute (TU_a)	Adjusted Acute (TU_a)	NOEC (%)	Chronic (TU_c)
May-03	>100	<1.0	1.0	69	1.4
Nov-03	>100	<1.0	1.0	34	2.9
May-04	>100	<1.0	1.0	100	1.0
Nov-04	>100	<1.0	1.0	100	1.0
May-05	>100	<1.0	1.0	100	1.0
Nov-05	>100	<1.0	1.0	100	1.0
May-06	>100	<1.0	1.0	100	1.0
Nov-06	>100	<1.0	1.0	100	1.0
May-07	>100	<1.0	1.0	100	1.0
Nov-07	>100	<1.0	1.0	100	1.0
May-08	>100	<1.0	1.0	100	1.0
Nov-08	>100	<1.0	1.0	100	1.0
n			**12**		**12**
CV			**0.0**		**0.5**
Maximum			**1.0**		**2.9**

Species: **Fathead Minnow**

Date	LC50 (%)	Acute (TU_a)	Adjusted Acute (TU_a)	NOEC (%)	Chronic (TU_c)
May-03	>100	<1.0	1.0	100	1.0
Nov-03	>100	<1.0	1.0	100	1.0
May-04	>100	<1.0	1.0	100	1.0
Nov-04	>100	<1.0	1.0	34	2.9
May-05	>100	<1.0	1.0	100	1.0
Nov-05	>100	<1.0	1.0	100	1.0
May-06	>100	<1.0	1.0	69	1.4
Nov-06	>100	<1.0	1.0	17.23	5.8
May-07	>100	<1.0	1.0	17.23	5.8
Nov-07	>100	<1.0	1.0	69	1.4
May-08	>100	<1.0	1.0	69	1.4
Nov-08	>100	<1.0	1.0	100	1.0
n			**12**		**12**
CV			**0.0**		**0.9**
Maximum			**1.0**		**5.8**

ATTACHMENT 27

Antidegradation Procedure for Non-BCCs for U.S. Steel - Midwest Plant Combined Outfalls 002, 003 and 004

2/27/2009
12:39 PM

(calculated in accordance with 327 IAC 5-2-11.3)		Existing Conditions (these data need to be entered)						Proposed Conditions (automatically entered if WQBELs, otherwise limitations must be entered)					Antidegradation Review				
		Existing Effluent Flow =		69.58 mgd													
	High Quality Water?	Existing Effluent Limitations				Existing Effluent Quality (only needed if no limitations)		Proposed Effluent Limitations				Basis of Proposed Limits (Technology/ WQBELs)	New or Increased Permit Limit?	Receiving Water Increase?	Is the Proposed Increase Greater than De minimis?		Antidegradation Demonstration Required?
		Concentration (µg/l)		Mass (lbs/day)		Conc. (µg/l)	Mass (lbs/day)	Concentration (µg/l)		Mass (lbs/day)					De minimis Test 1*	De minimis Test 2*	
Parameters	(Yes/No)	Average	Maximum	Average	Maximum	Average	Average	Average	Maximum	Average	Maximum						
Chlorine (total residual)	Yes	20	40					10	20	5.8	12	WQBELs	Yes	No			No

*De minimis Tests:

Test 1: The proposed increase in mass discharged is greater than or equal to 10% of the unused loading capacity.
Test 2: Less than 10% of the total loading capacity remains unused after the lowering of water quality.

ATTACHMENT 28

Antidegradation Procedure for Non-BCCs for U.S. Steel - Midwest Plant Outfall 004

2/27/2009
12:49 PM

(calculated in accordance with 327 IAC 5-2-11.3)		Existing Conditions (these data need to be entered)						Proposed Conditions (automatically entered if WQBELs, otherwise limitations must be entered)					Antidegradation Review				
		Existing Effluent Flow =		43.8 mgd													
		Existing Effluent Limitations				Existing Effluent Quality (only needed if no limitations)		Proposed Effluent Limitations				Basis of Proposed Limits (Technology/ WQBELs)	New or Increased Permit Limit?	Receiving Water Increase?	Is the Proposed Increase Greater than De minimis?		Antidegradation Demonstration Required?
		Concentration (µg/l)		Mass (lbs/day)		Conc. (µg/l)	Mass (lbs/day)	Concentration (µg/l)		Mass (lbs/day)					De minimis Test 1*	De minimis Test 2*	
Parameters	High Quality Water? (Yes/No)	Average	Maximum	Average	Maximum	Average	Average	Average	Maximum	Average	Maximum						
Silver	Yes					0.31	0.11	0.076	0.13	0.028	0.048	WQBELs	Yes	No			No
Cyanide, Free	Yes					15	5.5	7.5	13	2.7	4.8	WQBELs	Yes	No			No

*De minimis Tests:

Test 1: The proposed increase in mass discharged is greater than or equal to 10% of the unused loading capacity.
Test 2: Less than 10% of the total loading capacity remains unused after the lowering of water quality.

ATTACHMENT 29
U.S. Steel - Midwest Plant Outfall 002
Comparison of Available Dilution Factor to Modeled Dilution Factor

Q7,10:	71 mgd
Harmonic Mean:	228 mgd
ERM:	517 mgd
Width of Waterway:	50 m

Date	Effluent Flow (mgd)	Available Dilution Factor						Modeled Transition Distance (m)	Modeled Dilution Factor	
		100% Mixing Zone			50% Mixing Zone					
		Q7,10	Harmonic Mean	ERM	Q7,10	Harmonic Mean	ERM		Stable Centerline	Edge of Mixing Zone
8/1/08										
8/2/08										
8/3/08										
8/4/08										
8/5/08	5.394	14	43	97	7.6	22	49	395	104	109
8/6/08										
8/7/08										
8/8/08										
8/9/08										
8/10/08										
8/11/08										
8/12/08	5.472	14	43	95	7.5	22	48	198	52	55
8/13/08										
8/14/08										
8/15/08										
8/16/08										
8/17/08										
8/18/08										
8/19/08	5.395	14	43	97	7.6	22	49	274	72	76
8/20/08										
8/21/08										
8/22/08										
8/23/08										
8/24/08										
8/25/08										
8/26/08	5.445	14	43	96	7.5	22	48	174	46	48
8/27/08										
8/28/08										
8/29/08										
8/30/08										
8/31/08										

ATTACHMENT 30
U.S. Steel - Midwest Plant Outfall 003
Comparison of Available Dilution Factor to Modeled Dilution Factor

Q7,10:	71 mgd
Harmonic Mean:	228 mgd
ERM:	517 mgd
Width of Waterway:	65 m

Date	Effluent Flow (mgd)	Available Dilution Factor						Modeled Transition Distance (m)	Modeled Dilution Factor	
		100% Mixing Zone			50% Mixing Zone					
		Q7,10	Harmonic Mean	ERM	Q7,10	Harmonic Mean	ERM		Stable Centerline	Edge of Mixing Zone
8/1/08										
8/2/08										
8/3/08										
8/4/08										
8/5/08	17.387	5.1	14	31	3.0	7.6	16	284	48	96
8/6/08										
8/7/08										
8/8/08										
8/9/08										
8/10/08										
8/11/08										
8/12/08	16.865	5.2	15	32	3.1	7.8	16	321	55	111
8/13/08										
8/14/08										
8/15/08										
8/16/08										
8/17/08										
8/18/08										
8/19/08	16.811	5.2	15	32	3.1	7.8	16	448	77	155
8/20/08										
8/21/08										
8/22/08										
8/23/08										
8/24/08										
8/25/08										
8/26/08	17.068	5.2	14	31	3.1	7.7	16	363	61	123
8/27/08										
8/28/08										
8/29/08										
8/30/08										
8/31/08										

ATTACHMENT 31
U.S. Steel - Midwest Plant Outfall 004
Comparison of Available Dilution Factor to Modeled Dilution Factor

Q7,10:	71 mgd
Harmonic Mean:	228 mgd
ERM:	517 mgd
Width of Waterway:	60 m

Date	Effluent Flow (mgd)	Available Dilution Factor						Modeled Transition Distance (m)	Modeled Dilution Factor	
		100% Mixing Zone			50% Mixing Zone					
		Q7,10	Harmonic Mean	ERM	Q7,10	Harmonic Mean	ERM		Stable Centerline	Edge of Mixing Zone
8/1/08	24.4	3.9	10	22	2.5	5.7	12	182	19	12
8/2/08										
8/3/08										
8/4/08	23.744	4.0	11	23	2.5	5.8	12	155	16	10
8/5/08	21.166	4.4	12	25	2.7	6.4	13	139	15	9.6
8/6/08	19.479	4.6	13	28	2.8	6.9	14	110	12	7.7
8/7/08	20.745	4.4	12	26	2.7	6.5	13	129	14	8.9
8/8/08	31.08	3.3	8.3	18	2.1	4.7	9.3	167	16	10
8/9/08										
8/10/08										
8/11/08	29.108	3.4	8.8	19	2.2	4.9	9.9	154	15	9.5
8/12/08	30.24	3.3	8.5	18	2.2	4.8	9.5	167	16	10
8/13/08	26.82	3.6	9.5	20	2.3	5.3	11	147	15	9.3
8/14/08	52.473	2.4	5.3	11	1.7	3.2	5.9	250	20	12
8/15/08	24.021	4.0	10	23	2.5	5.7	12	145	15	9.4
8/16/08										
8/17/08										
8/18/08	24	4.0	11	23	2.5	5.8	12	154	16	10
8/19/08	32.368	3.2	8.0	17	2.1	4.5	9.0	178	17	11
8/20/08	17.9	5.0	14	30	3.0	7.4	15	140	17	10
8/21/08	25.976	3.7	9.8	21	2.4	5.4	11	154	16	9.9
8/22/08	22.283	4.2	11	24	2.6	6.1	13	149	16	10
8/23/08										
8/24/08										
8/25/08	27.93	3.5	9.2	20	2.3	5.1	10	166	16	10
8/26/08	25.29	3.8	10	21	2.4	5.5	11	150	15	9.6
8/27/08	22.681	4.1	11	24	2.6	6.0	12	143	15	9.5
8/28/08	30.242	3.3	8.5	18	2.2	4.8	9.5	163	16	9.8
8/29/08	28.817	3.5	8.9	19	2.2	5.0	10.0	171	17	11
8/30/08										
8/31/08										

ATTACHMENT 32

U.S. Steel - Midwest Plant Outfall 002

Comparison of Delta T at Edge of Mixing Zone (Set Equal to 50% of Flow) to Modeled Delta T

Q7,10:	71 mgd
Harmonic Mean:	228 mgd
ERM:	517 mgd

Date	Effluent Flow (mgd)	Upstream Temp. °F	Effluent Temp. °F	Delta T at Edge of Mixing Zone Q7,10 °F	Harmonic Mean °F	ERM °F	Modeled °F
8/1/08		78					
8/2/08							
8/3/08							
8/4/08		77					
8/5/08	5.394	73	77	0.5	0.2	0.1	0.0
8/6/08		73					
8/7/08		72					
8/8/08		73					
8/9/08							
8/10/08							
8/11/08		71					
8/12/08	5.472	72	79	0.9	0.3	0.1	0.1
8/13/08		72					
8/14/08		73					
8/15/08		73					
8/16/08							
8/17/08							
8/18/08		75					
8/19/08	5.395	76	78	0.3	0.1	0.0	0.0
8/20/08		76					
8/21/08		74					
8/22/08		75					
8/23/08							
8/24/08							
8/25/08		76					
8/26/08	5.445	74	83	1.2	0.4	0.2	0.2
8/27/08		74					
8/28/08		74					
8/29/08		75					
8/30/08							
8/31/08							

ATTACHMENT 33

U.S. Steel - Midwest Plant Outfall 003

Comparison of Delta T at Edge of Mixing Zone (Set Equal to 50% of Flow) to Modeled Delta T

Q7,10:	71 mgd
Harmonic Mean:	228 mgd
ERM:	517 mgd

Date	Effluent Flow (mgd)	Upstream Temp. °F	Effluent Temp. °F	Delta T at Edge of Mixing Zone Q7,10 °F	Harmonic Mean °F	ERM °F	Modeled °F
8/1/08		78					
8/2/08							
8/3/08							
8/4/08		77					
8/5/08	17.387	73	83	3.3	1.3	0.6	0.1
8/6/08		73					
8/7/08		72					
8/8/08		73					
8/9/08							
8/10/08							
8/11/08		71					
8/12/08	16.865	72	78	1.9	0.8	0.4	0.1
8/13/08		72					
8/14/08		73					
8/15/08		73					
8/16/08							
8/17/08							
8/18/08		75					
8/19/08	16.811	76	81	1.6	0.6	0.3	0.0
8/20/08		76					
8/21/08		74					
8/22/08		75					
8/23/08							
8/24/08							
8/25/08		76					
8/26/08	17.068	74	80	1.9	0.8	0.4	0.0
8/27/08		74					
8/28/08		74					
8/29/08		75					
8/30/08							
8/31/08							

ATTACHMENT 34

U.S. Steel - Midwest Plant Outfall 004

Comparison of Delta T at Edge of Mixing Zone (Set Equal to 50% of Flow) to Modeled Delta T

Q7,10:	71 mgd
Harmonic Mean:	228 mgd
ERM:	517 mgd

Date	Effluent Flow (mgd)	Upstream Temp. °F	Effluent Temp. °F	Delta T at Edge of Mixing Zone Q7,10 °F	Harmonic Mean °F	ERM °F	Modeled °F
8/1/08	24.4	78	91	5.3	2.3	1.1	1.0
8/2/08							
8/3/08							
8/4/08	23.744	77	91	5.6	2.4	1.2	1.2
8/5/08	21.166	73	92	7.1	3.0	1.4	1.8
8/6/08	19.479	73	94	7.4	3.1	1.5	2.4
8/7/08	20.745	72	91	7.0	2.9	1.4	1.9
8/8/08	31.08	73	90	7.9	3.6	1.8	1.5
8/9/08							
8/10/08							
8/11/08	29.108	71	87	7.2	3.3	1.6	1.5
8/12/08	30.24	72	86	6.4	2.9	1.5	1.3
8/13/08	26.82	72	88	6.9	3.0	1.5	1.5
8/14/08	52.473	73	85	7.2	3.8	2.0	0.9
8/15/08	24.021	73	89	6.5	2.8	1.4	1.5
8/16/08							
8/17/08							
8/18/08	24	75	90	6.1	2.6	1.3	1.4
8/19/08	32.368	76	89	6.2	2.9	1.4	1.1
8/20/08	17.9	76	91	5.0	2.0	1.0	1.3
8/21/08	25.976	74	89	6.3	2.8	1.4	1.4
8/22/08	22.283	75	90	5.8	2.5	1.2	1.4
8/23/08							
8/24/08							
8/25/08	27.93	76	87	4.8	2.2	1.1	1.0
8/26/08	25.29	74	88	5.8	2.5	1.2	1.3
8/27/08	22.681	74	89	5.8	2.5	1.2	1.4
8/28/08	30.242	74	88	6.4	2.9	1.5	1.3
8/29/08	28.817	75	88	5.8	2.6	1.3	1.1
8/30/08							
8/31/08							

ATTACHMENT 35

Comparison of Monthly Temperature Data Collected at Fixed Station BD-1 to Warm water (WW) and Cold water (CW) Temperature Criteria in Degrees Fahrenheit (°F)

Year	January	February	March	April	May	June	July	August	September	October	November	December
1990	42.3	39.4	47.6	--	60.0	63.1	77.0	71.6	66.7	68.5	51.8	--
1991	40.8	41.0	43.3	--	67.1	77.9	--	83.4	65.7	61.1	--	--
1992	46.9	43.9	46.9	53.6	63.0	64.2	75.2	65.7	73.8	--	--	--
1993	40.3	45.2	44.2	44.6	60.6	--	--	76.3	66.2	57.1	--	--
1994	--	--	48.0	64.1	--	60.7	--	75.5	--	62.6	59.6	--
1995	37.7	--	40.3	53.2	61.5	74.8	74.7	--	75.1	59.1	40.4	39.6
1996	36.4	37.2	39.4	52.0	68.4	71.3	76.3	74.2	70.3	57.9	44.9	43.6
1997	--	38.5	--	57.9	60.2	66.4	72.6	70.7	67.4	55.1	43.6	47.5
1998	--	41.4	47.3	55.7	--	73.8	77.7	--	72.5	63.0	54.3	48.0
1999	37.8	39.9	47.5	54.8	67.5	70.9	80.8	78.4	58.6	56.3	50.0	46.7
2000	40.6	41.3	51.8	57.2	65.8	74.3	74.3	73.4	71.8	64.9	42.1	39.5
2001	41.7	35.2	45.8	59.5	72.7	61.7	78.3	78.1	66.6	62.6	59.3	51.8
2002	47.5	44.9	46.4	68.9	60.6	73.2	81.5	76.7	75.2	66.7	51.1	45.5
2003	44.1	40.5	37.4	47.5	58.6	62.1	75.7	77.5	70.7	60.1	54.5	41.4
2004	39.6	41.4	46.0	52.9	68.7	64.2	74.8	73.9	73.6	60.4	55.2	41.5
2005	42.3	41.7	50.4	60.6	67.1	77.9	75.7	81.5	80.1	64.9	55.2	35.1
2006	43.9	43.2	54.5	54.1	57.0	71.8	77.9	73.6	65.5	66.9	48.7	35.6
2007	33.8	36.7	46.8	43.9	73.8	75.6	76.3	70.4	76.9	64.0	39.4	39.6
2008	42.0	34.3	45.3	47.4	58.6	72.9	74.5	78.1	70.7	50.8	39.1	39.8
WW Std.	50	50	60	70	80	90	90	90	90	78	70	57
CW Std.	65	65	65	65	65	70	70	70	65	65	65	65
Count	16	17	18	17	17	18	16	17	18	18	16	14
Maximum	47.5	45.2	54.5	68.9	73.8	77.9	81.5	83.4	80.1	68.5	59.6	51.8
Minimum	33.8	34.3	37.4	43.9	57.0	60.7	72.6	65.7	58.6	50.8	39.1	35.1
# > WW Std.	0	0	0	0	0	0	0	0	0	0	0	0
# > CW Std.	0	0	0	1	8	11	16	16	17	3	0	0
% > CW Std.	0	0	0	5.9	47	61	100	94	94	17	0	0

POST PUBLIC NOTICE ADDENDUM: January 7th 2010

The draft NPDES permit for the U.S. Steel Corporation, Midwest Plant, was made available for public comment from November 9th, 2009, through December 27th, 2010, as part of Public Notice No. 2010 – 11E – PH/RD. During this comment period, comment letters were received. The comments submitted, and this Office's corresponding responses are summarized below: Any changes to the permit and/or fact sheet are so noted below.

Comment 1:

Kay L. Nelson
Director Environmental Affairs, Northwest Indiana Forum

Thank you for the opportunity to comment on the issuance of the proposed United States Steel Midwest Plant NPDES permit. The Northwest Indiana Forum is a non-profit, regional economic development organization servicing members in Lake, Porter, LaPorte, Starke, Jasper, Newton and Pulaski counties. Our focus is the retention and creation of quality employment opportunities that sustain and enhance our environment and quality of life for the residents of Nothwcst Indiana. Protection of the environment while enhancing the region's global competitive position is the highest priority for our members.

The Forum is pleased that the proposed permit being considered for the United States Steel Midwest Plant reflects the following:

- An increase in reporting requirements
- An approximate 50% increase in the number of monitored parameters
- The addition of 3 monitoring points

Receipt of technically, scientifically and legally based environmental permits are crucial to our nation's quality of life and global competitiveness. American businesses must be certain that the state and federal regulatory agencies execute their roles and responsibilities in a fashion whereby the receipt of an environmental permit allows the continuance and/or expansion of a facility to occur without interruption following permit issuance. Referred to as permitting certainty, the lack of such certainty can negatively impact investment decisions related to long term capital improvement and expansion projects.

The Northwest Indiana Forum supports the issuance of quality environmental permits by IDEM, such as the proposed United States Steel Midwest Plan NPDES permit. Thank you for the opportunity to provide our comments.

Response 1:

IDEM acknowledges the comments submitted by the Northwest Indiana Forum.

Comment 2:

Mardanna D. Soto
Water Compliance Manager, United States Steel Corporation Gary Works, Midwest, East Chicago Tin

1. Part I.A.1, I.A.2, and I.A.3 — Outfall 002, 003, and 004 Total Residual Chlorine Requirements

Issue: U. S. Steel Midwest adds chlorine to the intake water for biological control only at certain periods of the year. Monitoring on a weekly basis is not practical or effective in monitoring residual chlorine levels at Outfalls 002, 003, and 004.

Citation: Page 2, 4, and 6 of 71 of the draft permit and U. S. Steel Gary Works Permit

U. S. Steel Position: The draft permit includes effluent limits for Total Residual Chlorine (TRC) and requirements to monitor at a 'Weekly' frequency. This does not appear to be the most effective means of monitoring for Total Residual Chlorine at the outfalls. A recommended option would be to include a similar footnote as is included in the U. S. Steel Gary Works NPDES permit (No. 1N0000281, page 3 of 125, Footnote [9]) which states "Monitoring for TRC shall be 1 x Daily during Zebra or Quagga mussel intake chlorination, and continue for three additional days after Zebra or Quagga mussel treatment has been completed." Under this monitoring scenario, the permittee is not burdened with unnecessary monitoring when chlorine would not otherwise be in the system and there is additional monitoring during times when it is known to be in the system.

Proposed Language:

- Change monitoring frequency to Daily for Total Residual Chlorine at Outfalls 002, 003, and 004.
- Include footnote for Outfalls 002, 003, and 004 to reference monitoring frequency and state, "Monitoring for TRC shall be 1 X Daily during Zebra or Quagga mussel intake chlorination, and continue for three additional days after Zebra or Quagga mussel treatment has been completed."

Response 2 **(1.)**:

IDEM concurs and will change monitoring for TRC to 1 x Daily and has added a footnote that this monitoring applies when the treatment for Zebra and Quagga mussel is occurring and for three days after treatment has been completed.

2. Part I.A.3 — Outfall 004 Free Cyanide Requirements

Issue: Free Cyanide limits should be changed to report only and the corresponding analytical method should be clarified.

Citation: Page 6 of 71

U. S. Steel Position: IDEM has established Free Cyanide concentration and mass limits at Outfall 004 based on the RPE analysis presented in Appendix E. In Attachment 24 of Appendix F, there is a RPE based on one monthly average (March 2008 — see Attachment 20-A). However, of the three samples that make up the March 2008 monthly average, two are less than the Limit of Detection (LOD) and the third is between the LOD and the Limit of Quantification (LOQ) as indicated by the "J" flag. Therefore, the RPE is an artifact of non-quantifiable effluent data and should not be used to establish numerical limitations. To properly assess free cyanide, additional sampling is warranted before a numerical limit is implemented. U. S. Steel requests that the numerical limits for free cyanide be changed to report only whereupon a more robust RPE analysis can be conducted during or at the end of the permit term. Due to this request, the phrase "no longer" should be deleted from footnote [9].

In regards to cyanide analytical methods, footnote [5] should be revised by removing the reference to Method 1677 as total cyanide is not required at Outfall 004. In addition, U. S. Steel requests that reference

to a "no sulfides" demonstration be added to footnote [5] to allow the option of 24-hr composite sampling. Specific language for this demonstration that can be added to footnote [5] is found in the U. S. Steel Gary Works NPDES Permit Part I.Q.

Proposed Language: Change Free Cyanide concentration and mass requirements at Outfall 004 from numerical limits to report only. Revise footnote [5] to delete Method 1677 and add a "no sulfides" demonstration option (note: the "no sulfides" addition also applies to footnote [3] for Outfalls 104, 204, and 304).

Response 2 **(2.)**:

The RPE calculation for Free Cyanide was done in accordance with 327 IAC 5-2-11.5(b), thus limits for this parameter remain in the permit. It should be noted that a reopening clause for Free Cyanide has been included in Part I. I. 5. of the permit to request a review to determine if there is no longer a reasonable potential to exceed the Water Quality Based Effluent Limits for Free Cyanide based upon the submission of more effluent data. Footnote [5] will be revised to delete Method 1677 and to add a "no sulfides" demonstration option to allow for a composite sample versus a grab.

3. Part I.A.3 — Outfall 004 Silver Requirements

Issue: Clarifications to silver requirements are necessary since the daily maximum and monthly average WQBEL5 (0.13 ppb and 0.076 ppb) are less than the LOQ (0.64 ppb).

Citation: Page 7 of 71- footnote [6] and footnote [8]

U. S. Steel Position: Footnote [6] states that the silver daily maximum WQBEL (0.13 ppb) is greater than the LOD (0.2 ppb) but less than the LOQ (0.64 ppb). This is not true — the daily maximum WQBEL is less than the LOD. Footnote [8] presents the daily maximum mass compliance level for total residual chlorine, but omits the corresponding value for silver. The silver value should be 0.00064 mg/L * 43.8 mgd * 8.34 = 0.23 lb/day.

Proposed Language: Revise footnote [6] as above and add a silver daily maximum mass compliance level of 0.23 lb/day to footnote [8].

Response 2 **(3.)**:

Footnote [6] will be revised to reflect the fact that the daily maximum WQBEL is less than the LOD for silver and the corresponding daily maximum mass compliance level for silver will be added in Footnote [8].

4. Part I.A.3 — Outfall 004 Mercury Requirements

Issue: Monitoring requirements for mercury should be removed.

Citation: Page 6 of 71

U. S. Steel Position: The draft permit includes monitoring of mercury at Outfall 004 at a frequency 6 X yearly (no numerical limits). Attachment 24 of Appendix E presents the results of the RPE analysis; there

is no RPE for mercury on either a monthly average basis (10 data points) or a daily maximum basis (22 data points). The relative abundance of mercury data provides additional confidence in the RPE results. The monthly monitoring data for mercury at Outfall 004 collected over a two-year period (n=22) does not exhibit a single concentration above 0.6 ng/L and has been non-detect for the last year. Over the same period, the highest mercury concentration at the intake was 3.6 ng/L. Even though Outfall 004 is a process outfall, the monitoring data indicate the processes do not contribute mercury loading to the Great Lakes. Therefore no permit requirements, including additional monitoring, are necessary during the permit term.

If IDEM still deems mercury monitoring to be necessary, U. S. Steel requests the monitoring frequency be reduced from 6 X yearly to 1 X yearly.

Proposed Language: Remove all permit requirements for mercury at Outfall 004 including report only provisions, footnote [3], and the mercury method given in Part I.C.4.d.

Response 2 **(4.)**:

Mercury is a common constituent in the effluent of steel mills, therefore, monitoring for mercury will remain in the permit.

5. Part I.A.3 — Outfall 004 Whole Effluent Toxicity (WET) Requirements

Issue: Revise the WET monitoring frequency from 4 X yearly to 2 X yearly.

Citation: Page 6 of 71
U. S. Steel Position: No basis for a monitoring frequency for WET of 4 X yearly (i.e., quarterly) has been presented in the Fact Sheet or corresponding RPE analysis (Appendix E). In Part I.F. 1 (Whole Effluent Toxicity Limitations), the draft permit stipulates that "The permittee shall continue with their current schedule of the series of bioassay tests described below to monitor the toxicity of the discharge from Outfall 004." Since U. S. Steel acquired the Midwest Plant in 2003, Outfall 004 WET has been monitored at a frequency of 2 X yearly and this current schedule should be continued in the renewed permit. IDEM has not provided additional rationale for increasing the monitoring frequency greater than the current schedule.

Footnote [11] presents a detailed explanation of the logistics of a quarterly sampling schedule. U. S. Steel requests this footnote be modified to accommodate the 2 X yearly monitoring frequency described above (i.e., January to June and July to December sampling periods).

Proposed Language: Change the WET monitoring frequency from 4 X yearly to 2 X yearly. Revise footnote [11] to clarify the logistics of utilizing semi-annual sampling periods. (Note: additional revisions to Part I.F WET provisions are given in Comment #14).

Response 2 **(5.)**:

IDEM believes the quarterly monitoring frequency for WET is appropriate to ensure the narrative criterion for chronic WET is not exceeded. Footnote [11] will remain as is in keeping the quarterly monitoring for WET in this permit.

6. Part I.A.6 — Outfall 304 Technology Based Effluent Limitations (TBEL) Calculations

Issue: Revisions to TBEL calculations are necessary to reflect current Midwest operations and processes.
Citation: Page 15 of 71 and Fact Sheet Appendix B, C, and D

U. S. Steel Position: U. S. Steel notes the following revisions/corrections to facility operations presented in Fact Sheet Appendix B, C, and D used for TBEL calculations:

- There is one HCl Pickling fume scrubber, not two
- The COMBO line production of 474 (1,000 lb/day) for "Alkaline Cleaning — batch and continuous" should not be subject to NSPS (40 CFR 420.114(a)) as it is not a new source. This continuous recoil line was installed in 1959-1960 and therefore should be covered under 40 CFR 420.112(b).
- Each of the galvanizing lines (72" and No. 3) has one corresponding fume scrubber for controlling air emissions off the production line. The scrubbers were inadvertently omitted from the permit renewal application because there is no production associated with them, only that they are operating. Therefore the addition of one scrubber under 40 CFR 420.122(c) is applicable for the 72" galvanizing line and the addition of one scrubber under 40 CFR 420.124(c) is applicable for the No. 3 galvanizing line. The addition of the galvanizing fume scrubbers will increase the hexavalent chromium limitations for Outfall 304 to 0.53 lb/day daily maximum and 0.18 lb/day monthly average. Since these values for hexavalent chromium at Outfall 304 are still below the respective limits in the previous permit, this change would not cause issues with antibacksliding.

Proposed Language: Revise Fact Sheet Appendix B, C, and D to reflect above operations. Subsequently, revise Outfall 304 hexavalent chromium limitations to 0.53 lb/day daily maximum and 0.18 lb/day monthly average.

Response 2 **(6.)**:

IDEM acknowledges US Steels comment concerning the Hex. Chrome mass limits, however IDEM believes that US Steel's treatment system should be able to meet the hexavalent chromium limitations as stated in draft permit. IDEM notes the recent stories in the media as to the serious impacts of hexavalent chromium on human health and the elevated levels in drinking water supplies, and considers the limits in the draft to be appropriate.

7. Part I.A.6 — Outfall 304 Silver, Cadmium, and Copper Requirements

Issue: The Outfall 304 silver, cadmium, and copper mass limits based on ELGs should be revised to report only. Silver assessment provisions given in footnote [7] are unnecessary.
Citation: Page 15 of 71

U. S. Steel Position: Technology based effluent limits for silver, cadmium, and copper have been applied to Outfall 304. The Fact Sheet indicates, "if the mass-based TBELs at the internal outfall exceed the mass-based WQBELs at the final outfall, the pollutant may be discharged at a level that will cause an excursion above a numeric water quality criterion or value under 327 IAC 2-1.5 and WQBELs are required for the pollutant at the final outfall." In other words, if Outfall 304 were to discharge at these TBEL levels, an RPE would result at Outfall 004 and, therefore, IDEM has placed corresponding limits at Outfall 004 equal to the WQBELs derived in Attachment 16 of Appendix E (per USEPA request). Since

the Outfall 004 mass based WQBELs are more restrictive than Outfall 304 ELGs, the numerical ELGs for silver, cadmium, and copper should be removed from Outfall 304 and replaced with report only as the more restrictive limits at Outfall 004 preclude the need for limitations at Outfall 304. Further, the Outfall 004 limits are numerically less than the Outfall 304 ELGs, creating a compliance conflict. Outfall 304 is the only contributor of these parameters to Outfall 004.

Footnote [7] presents additional assessment provisions for silver to determine the applicability of monitoring this parameter. However, silver is subject to ELOs and cannot be removed from Outfall 304 unless 40 CFR 433 processes cease operations. Therefore, this footnote (as well as footnote [6] for Outfalls 104 and 204) should be deleted in its entirety.

Proposed Language: Remove the Outfall 304 daily maximum and monthly average mass limits for silver, cadmium, and copper and replace with report only. Delete footnote [7] for Outfall 304 and footnote [6] for Outfalls 104 and 204.

Response 2 **(7.)**:

IDEM concurs with this rationale and will require report only for silver, cadmium, and copper at Outfall (compliance point) 304. Footnote [6] will be deleted from Outfalls 104 and 204 and Footnote [7] will be deleted from Outfall 304.

8. Part I.A.6 — Outfall 304 Fluoride Requirements

Issue: All permitting requirements for fluoride should be removed from Outfall 304.
Citation: Page 15 of 71

U. S. Steel Position: Fluoride limits and monitoring requirements from the previous permit have been rolled over to the draft permit, yet the Fact Sheet presents no basis for retaining these limits. Fluoride is not subject to any ELGs applicable to Outfall 304. Table 4 and Attachment 24 of Appendix E present results from the RPE analysis and fluoride is shown to have no RPE at Outfall 004 which receives the Outfall 304 discharge. Chloride and sulfate, which also have no RPE at Outfall 004, have been removed from Outfall 304 further justifying the removal of fluoride.

Proposed Language: Remove all permit requirements for fluoride at Outfall 304 (as well as Outfalls 104 and 204) including numerical limits, monitoring requirements, and the fluoride method given in Part I.C.4.d.

Response 2 **(8.)**:

IDEM does not propose to remove the limits for Fluoride at this time. The 1994 permit renewal application stated that treatment for Fluoride was included.

9. Part I.A.6 — Outfall 304 Monitoring Frequencies

Issue: The monitoring frequencies for several parameters at Outfall 304 conflict with the recommendations given in the Fact Sheet.

Citation: Page 15 of 71

U. S. Steel Position: Section 6.1 of the Fact Sheet (page 25) presents recommendations on monitoring frequencies for Outfall 304 that have not been implemented in the permit. U. S. Steel requests the following revisions/corrections to implement these recommendations:

- The monitoring frequency for nickel, cadmium, copper, and silver should be quarterly.
- The monitoring frequency for total chromium, total cyanide, and lead should be 1 X weekly.
- The monitoring frequency for TTO should be quarterly. There is not significant solvent usage/storage at Midwest that would warrant a frequency of 'Monthly' for TTO. Footnote [5] for Outfalls 104, 204, and 304 relating to the Certification Statement states, "In lieu of quarterly monitoring for TTO..." Further, the "Report" requirement for the monthly average concentration should be removed.
- Frequency of monitoring for naphthalene and tetrachioroethylene in the current NPDES permit is 'Quarterly.' Page 21 of the current Fact Sheet (1990) states "Because of the reported low effluent concentrations of these two pollutants, monitoring is required only on a quarterly basis." This rational also applies to the draft permit since no detections of naphthalene or tetrachloroethylene are shown in Attachments 17, 18, 19, 20, and 23 of Appendix B. IDEM provides no justification for an increased monitoring frequency when there have not been detectable concentrations for these parameters. The monitoring frequency for naphthalene and tetrachioroethylene should be quarterly. Further, the "Report" requirement for the monthly average concentration should be removed.

Proposed Language: Revise Outfall 304 (and corresponding Outfall 104 and 204) monitoring frequencies and report requirements for select parameters as described above.

Response 2 **(9.)**:

The monitoring frequencies from the Fact Sheet language for Outfall 304, which conflict with those in the permit, will be corrected to coincide with the parameter frequencies as listed for Outfall 304 in the permit. However, IDEM finds that quarterly monitoring for Nickel, Cadmium, Copper and Silver would not be adequate for potential future calculations for reasonable potential to exceed (RPE) the State's Water Quality Standards, also there is not a rationale for reducing the original monitoring frequency of 5 X Weekly to 1 X Weekly for Total Chromium, as this was the original monitoring frequency in the permit. Monitoring frequency for Total Cyanide, TTO, naphthalene, and tetrachloroethylene will also remain unchanged. IDEM concurs that only the daily maximum requirement is appropriate for TTO so the reporting for monthly average for TTO has been removed.

10. Part I.A.7 — Stormwater Monitoring for Ammonia

Issue: Stormwater monitoring for ammonia should be removed.

Citation: Page 17 of 71

U. S. Steel Position: The rationale for the list of parameters for stormwater monitoring given in Part I.A.7 is presented in Section 5.7 of the Fact Sheet which states, "Monitoring requirements for flow, TSS, COD, oil and grease, and pH have been included at Outfall 001 for storm water discharges exposed to industrial activity. Monitoring requirements for zinc have been included at Outfall 001 based on monitoring requirements for primary metals facilities in USEPAs 2008 multi-sector general permit." Ammonia is not listed as a parameter of concern and no basis is given for its inclusion at the stormwater outfalls.

Ammonia is not included on the 2008 multi-sector general permit and is not a monitored parameter at any of the process outfalls. Repeated ammonia monitoring is not necessary for the term of the permit.

Proposed Language: Remove ammonia from the list of parameters given in PartI.A.7.

Response 2 **(10.)**:

Ammonia is a common constituent in stormwater runoff and therefore monitoring will be required to ensure it is not present in significant concentrations.

11. Part I.A.7 — Outfall 102 and 103 Internal Stormwater Discharges

Issue: New Outfall 102 and 103 locations have not been specified in the permit and these outfalls should be removed in lieu of additional wet weather monitoring requirements for existing Outfalls 002 and 003.

Citation: Page 17 of 71

U. S. Steel Position: Per USEPA request, Outfalls 102 (internal to Outfall 002) and 103 (internal to Outfall 003) have been added to the Midwest permit to monitor stormwater components of these discharges. However, the exact location of these outfalls has not been specified in the permit or Fact Sheet and U. S. Steel is concerned with the logistics (access and safety) to obtain representative samples. As an alternative to new internal outfalls, U. S. Steel proposes to modify the monitoring provisions of existing Outfall 002 and 003 to capture the impact of these discharges during wet weather events. Specifically, during dry weather (no rain) conditions, U. S. Steel would monitor Outfall 002 and 003 in accordance with the provisions presented in Part I.A. 1 and I.A.2 (i.e., flow, Oil & Grease, TRC, and pH). During a wet weather (rain) event, the additional parameters given in Part I.A.7 (i.e., TSS, COD, and zinc) would also be monitored at Outfalls 002 and 003 to assess relative impact from stormwater on the receiving water. U. S. Steel proposes a wet weather monitoring frequency of 2 X yearly consistent with the stormwater monitoring frequency established for the recently issued U. S. Steel Gary Works permit. This proposal would allow U. S. Steel to ascertain the effectiveness of stormwater controls at the facility, while removing the need for additional internal monitoring locations. U. S. Steel requests a continued dialog with IDEM to finalize the logistics of wet weather monitoring at Outfalls 002 and 003.

Proposed Language: Remove Outfalls 102 and 103 from Part I.A.7; the requirements would applicable to Outfall 001 only. Add additional wet weather sampling requirements for TSS, COD, and zinc (including a 2 X yearly monitoring frequency and relevant footnotes) at Outfalls 002 and 003.

Response 2 **(11.)**:

IDEM has reconsidered the approach of requiring these internal outfalls for storm water only measurement. Since these are not existing outfalls, a footnote has been added in Part IA.7. of the permit that will allow US Steel twelve months to determine if appropriate locations can be determined for representative storm water only measurement. If locations are not possible and with IDEM concurrence the monitoring requirements will be moved to the respective final outfalls and the parameters will be measured there during the specified rain events.

12. Part I.A.7 — Outfall 001 Monitoring Frequency

Issue: Outfall 001 monitoring frequency should be changed from quarterly to 2 X yearly.

Citation: Page 17 of 71

U. S. Steel Position: IDEM has not provided specific rationale for quarterly stormwater monitoring over the term of the permit. Quarterly monitoring is not consistent with the stormwater monitoring frequency of 2 X yearly established for the recently issued U. S. Steel Gary Works permit. U. S. Steel requests that the monitoring frequency for the Midwest facility remain consistent with Gary Works, pending further IDEM rationale. The 2 X yearly monitoring frequency would be the same as the Outfall 002 and 003 wet weather sampling frequency proposed above in Comment #11.

Proposed Language: Change the Outfall 001 monitoring frequency from quarterly to 2 X yearly (consistent with Outfall 002 and 003 wet weather sampling) and revise footnote [3] as appropriate.

Response 2 **(12.)**:

IDEM feels that quarterly monitoring for storm water is appropriate at this time. The permit contains new storm water monitoring points and requirements including non-numeric permit conditions for storm water that have not been previously required. U. S. Steel can after these conditions have been implemented and some storm water data has been taken request a review of the monitoring frequency.

13. Part I.C — Monitoring and Reporting

Issue: Requested corrections and revisions

Citation: Page 18 of 71

U. S. Steel Position: U. S. Steel requests the following revisions:

- Part I.C.4.d — In the analytical methods table, delete phenols and selenium as these parameters are not monitored at Midwest at any outfall. Add oil & grease, total chromium, hexavalent chromium, and COD (same text given in U. S. Steel Gary Works permit is appropriate).
- Part I.C.4.d footnote [3] — In regards to mass based LOD and LOQ, delete this footnote that was applicable to the U. S. Steel Gary Works permit, but not the U. S. Steel Midwest permit.

Proposed Language: Revised per above requests

Response 2 **(13.)**:

The analytical methods table will be updated to reflect those parameters covered under the U.S. Steel, Midwest Facility, permit and footnote [3] will be deleted.

14. Part I.F — Whole Effluent Toxicity Limitations

Issue: Requested corrections and revisions (consistent with the request for a 2 X yearly WET monitoring frequency given in Comment #5)

Citation: Page 41 of 71

U. S. Steel Position: U. S. Steel requests the following revisions:

- Part I.F.1.d — WET testing duration - Replace "quarterly" with "2 X yearly"
- Part I.F. 1 .d — WET testing duration - Delete "in the monthly testing for three (3) months"
- Part I.F. 1 .g.(5) — WET definition of quarterly - Delete whole paragraph as it conflicts with Footnote [11] for Outfall 004
- Part I.F.2.e — Post TRE biomonitoring requirements - Replace "quarterly" with "2 X yearly"

Proposed Language: Revised per above requests

Response 2 **(14.)**: IDEM believes that the quarterly monitoring requirement is appropriate.

15. Part I.G — Pollutant Minimization Program

Issue: Requested corrections and revisions

Citation: Page 48 of 71

U. S. Steel Position: U. S. Steel requests the following revisions:

- Part I.G — Introduction - Add new sentence: "One basic PMP for TRC can be submitted for all affected Outfalls." (per U. S. Steel Gary Works permit)
- Part I.G.1.a. (1) — PMP control strategy schedule - Change "90 days" to "180 days" (per U. S. Steel Gary Works permit)

Proposed Language: Revised per above requests

Response 2 **(15.)**:

Part I.G. will be updated per cited U. S. Steel Gary Works PMP language .

16. Part I.H — Toxic Organic Pollutant Management Plan - Timeframe

Issue: There is no timeframe established in the Federal Guideline associated with submittal of the Plan. Therefore, 90 days from the effective date of the permit is arbitrary and limits the options of the permittee.

Citation: Page 49 of 71 of the permit and 40 CFR 433.12(b)

U. S. Steel Position: The Federal Guidelines provide for submittal of a "Solvent Management Plan" as a certification alternative to monitoring the discharge from Outfall 104, 204, and 304 for Total Toxic Organics. While this plan must be approved by IDEM, there is no timeframe required for the submittal. A monitoring frequency of 'Quarterly' (see Comment #9) would suggest the Plan should be submitted within 90 days of the permit effective date, however it is the permittee's discretion as to when to exercise the option.

Proposed Language: Remove the requirement in Part I.H to submit the Toxic Organic Pollutant Management Plan within 90 days of the effective date of the permit.

Response 2 **(16.)**:

IDEM sees the 90 day period to submit the Toxic Organic Pollutant Management Plan as a reasonable time frame and is standard TTO language in our permits. Therefore, the 90 day period will remain in the permit upon issuance.

17. Part 1.11— Toxic Organic Pollutant Management Plan –Revisions

Issue: Requested corrections and revisions

Citation: Page 49 of 71

U. S. Steel Position: U. S. Steel requests the following revisions:

- Part I.H - Replace "and 5. footnote [6]" with "I.A.5, and I.A.6, footnote [5]"

Proposed Language: Revised per above requests

Response 2 **(17.)**:

Part I.H. will be revised per requests.

18. Part 1.1 — Reopening Clauses

Issue: Requested corrections and revisions

Citation: Page 49 of 71

U. S. Steel Position: U. S. Steel requests the following revisions:

- Part I.I.5 — WQBEL5 — Delete "and Silver" from this section as WQBELs are to be maintained for silver at Outfall 004 (per USEPA) since the corresponding silver TBEL at Outfall 304 is greater

Proposed Language: Revised per above requests

Response 2 **(18.)**:

In Part I.I.5, "and Silver" will be removed per request.

19. Part II.C — Reporting Requirements

Issue: Requested corrections and revisions

Citation: Page 60 of 71

U. S. Steel Position: U. S. Steel requests the following revisions:

• Part II.C.9.b — Changes in discharges of toxic substances - Delete II.C.9.b in entirety as it is redundant with II.C.9.a (which is consistent with U. S. Steel Gary Works permit)

Proposed Language: Revised per above requests

Response 2 **(19.)**:

IDEM is not deleting Part II.C.9.b at this time.

20. Part III.A — Thermal Effluent Requirements

Issue: Requested corrections and revisions

Citation: Page 66 of 71

U. S. Steel Position: U. S. Steel requests the following revisions:

• Overall - Please see the attached "redlined" version of Part III.A which clarifies the monitoring requirements and logistics for implementing either a continuous downstream monitoring location or developing a new thermal model.
• Part III.A.6 — The "redlined" edits in this section reflect a U. S. Steel request that upstream temperature exclusion be applied to all months of the year as, even though the Fact Sheet denotes "no RPE", U. S. Steel has no control over upstream Burns Ditch temperatures for the winter months.

Proposed Language: Revised per above requests

Response 2 **(20.)**:

IDEM reviewed your comments on Part III of the permit and has made appropriate changes.

21. Part III.B — Intake Structure

Issue: Requested corrections and revisions

Citation: Page 68 of 71

U. S. Steel Position: U. S. Steel requests the following revisions:

• Part III.B.2.a.(iv) to (vi) — CWIS entrainment study schedule - Delete these sections (or revise to allow additional studies under a reopener clause — Section 1.1) as the proposed schedule extends past the permit expiration date; U. S. Steel can supplement studies via a renewed permit or through a requested reopener.
• Part III.B.2.b.(iv) to (vi) — CWIS impingement study schedule - Delete these sections (or revise to allow additional studies under a reopener clause — Section 1.1) as the proposed schedule

extends past the permit expiration date; U. S. Steel can supplement studies via a renewed permit or through a requested reopener.

Proposed Language: Revised per above requests

Response 2 **(21.)**:

IDEM feels the current language is appropriate and no changes are proposed at this time.

22. Part III.C — Intake Screen Wash

Issue: Section is unnecessary and redundant because screen backwash goes to treatment.

Citation: Page 71 of 71

U. S. Steel Position: Intake Screen backwash is currently directed to the Final Treatment Plant and is monitored through Outfalls 104 and 004, which already include narrative requirements. This section is unnecessary and should be removed.

Proposed Language:

- Delete Section III.C

Response 2 **(22.)**:

IDEM did not remove the section but has noted that this backwash goes through treatment prior to discharge.

23. Fact Sheet

Issue: Requested corrections and revisions

Citation: June 29, 2010 Fact Sheet

U. S. Steel Position: U. S. Steel requests revisions to the Fact Sheet reflecting the comments given above. Please see the attached "redlined" version of the Fact Sheet which: 1) presents suggested revisions to incorporate the requests given in the above comments, and 2) provides corrections and clarifications to descriptions of facility operations, discharge conditions, permit history, etc. Not all Fact Sheet revisions given in the redline document are referenced in the above comments.

Proposed Language: Revised per above requests

Response 2 **(23.)**:

Requests will be reviewed and revised where appropriate to do so.

Comment 3:

Nicole Kamins, Executive Director
Save the Dunes

Chromium Treatment Facility

Save the Dunes is glad to hear of USS Midwest's commitment to construction of a chromium treatment system for Outfall 004. This month, the Chicago Tribune and other newspapers highlighted the fact that hexavalent chromium is being detected at elevated levels in drinking water supplies throughout the country, including Chicago, yet monitoring of this toxic substance in drinking water is not required at the federal level. Hexavalent chromium has been linked with stomach cancer. Given the serious impacts of chromium on health, we urge IDEM to tighten the timeframe for USS Midwest to construct the treatment plant. In the draft permit, USS Midwest is given the length of the permit (five years) for its completion. We believe this timeframe should be significantly compressed. In addition, we seek an explanation from IDEM as to what will happen with the modeled chromium discharge in the interim. The permit should include ramifications for noncompliance and identify interim measures to be taken should the permit be administratively extended.

We understand the new chrome treatment plant will be equipped with dedicated sludge management equipment. We seek details about the sludge's management and disposal.

Response 3: Chromium Treatment Facility

IDEM understands the public's concern related to the Hexavalent Chromium concentrations in the public water supply. However, it should be pointed out that the limits shown at the Internal Outfall are effective immediately upon the effective date of the permit. US Steel has hexavalent chromium limits in the current permit and already treat for Hex. Chrome at the treatment system currently listed at Internal Outfall 104. As part of this permit renewal US Steel requested that this renewed permit allow for them the opportunity to construct a new chrome reduction facility to replace the existing reduction treatment system and that it would have its own internal outfall separate from what is currently being reported at 104. IDEM accommodated this request by creating a new internal outfall 204 for this new discharge and equating the mass discharge currently allowed at 104 to both the accumulative mass of 104 and 204 and designated this as the virtual outfall 304. The limits for hexavalent chromium are applicable regardless whether or not or when this new treatment plant is built. They become effective on the effective date of this permit even if this new treatment plant is not built for several years. It should also be pointed out that the hexavalent chromium limits in this renewed permit are more stringent than what is in the current permit. The less stringent limits will still apply until this renewed permit becomes effective. Since the new treatment system has not yet been constructed, we do not have all the details about the sludge management and disposal, we anticipate those upon notification of the beginning of the construction of the new chrome treatment plant.

Concentration Limitations for Chromium, Lead and Zinc from Compliance Point 304

According to the US Environmental Protection Agency's 2009 Toxic Release Inventory, US Steel discharged 800 pounds of chromium, 158 pounds of lead and 160 pounds of zinc into the Portage-Burns Waterway. The permit does not contain concentration limitations for these pollutants at compliance point

304— only a reporting requirement. Due to the severe potential human health impacts of these pollutants, Save the Dunes urges IDEM to require concentration limitations for each.

Response 3: Concentration Limitations for Chromium, Lead and Zinc from Compliance Point 304

IDEM understands your concerns but the TRI shows these as yearly total quantities. The limits in the permit for these parameters are as stringent as or more stringent than the current permit and no reasonable potential was demonstrated for the above parameters to require a water quality based effluent limit at Outfall 004. Concentration values are being reported at 304 with the appropriate corresponding mass limits.

Antidegradation

IDEM used a nonrule policy document for its antidegradation analysis. This policy has been heavily criticized by the Alliance for the Great Lakes, Save the Dunes, and others. We need IDEM to adopt final antidegradation rules for use in such analyses rather than continually relying on nonrule policies. This approach does not protect human health or the environment. Should these rules be implemented after this permit is issued, we request a reopener clause be included. This clause would allow the permit to be revised to comply with new antidegradation rules.

Response 3: Antidegradation

IDEM has addressed Antidegradation in the Fact Sheet and in the attached WLA report. The permit addresses Antidegradation based upon the rules that are in effect when the permit is issued. Any future changes (modifications) or permit renewals will then address Antidegradation using the rule in effect at that time.

Oil and Grease

The draft permit states that if oil and grease are measured above 5 milligrams per liter, then the source of it needs to be investigated and eliminated, if feasible. Please clarify whether if it goes above 5 mg/l whether it is a violation. Also, please legally define "if feasible."

Response 3: Oil and Grease

This footnote is used at Outfalls that consist mainly of non-contact cooling water. The measurement of Oil and Grease is used as an indicator parameter for something possibly not operating properly that would allow for the presence of oil and grease. The 5 mg/l trigger is the limit of quantification for the test method used. If oil and grease is measured in the effluent in significant quantities, the source of such discharge is to be investigated and eliminated. The facility is required to investigate and eliminate any significant or measured concentration of oil and grease (quantities in excess of 5 mg/l). The intent of this requirement is to assure that oil and grease is not added to once-through cooling water in measurable quantities (5 mg/l). The term "feasible", with regards to oil and grease, was used in the Fact Sheet and is meant to clarify a scenario of attempted remediation in the event there was an excursion, as opposed to a legal definition within the permit language. It was used in a general definition of the word.

Reopener Clause: Free Cyanide

There is a reasonable potential to exceed the Water Quality Effluent Limits (WQELs) for free cyanide in the draft permit. USS Midwest's data set was limited for free cyanide, so IDEM included a reopener clause to reevaluate this when more data is available. The permit stipulates monitoring twice monthly for ten months. Save the Dunes believes there should be more frequent monitoring, and urges IDEM to specify what actions USS Midwest should take if exceedances are noted during this timeline. IDEM should also identify a timeline for the study; we believe it should be completed within 12 months of permit issuance.

Response 3: Reopener Clause: Free Cyanide

Twice monthly monitoring over a ten month period is adequate in determining a reasonable potential in accordance with 327 IAC 5-2-11.5(b) for Free Cyanide. The limits for Free Cyanide take effect upon the effective date of this issued permit with no schedule of compliance, so any exceedances for Free Cyanide are noted and go directly to compliance. This study is only required in the event the permittee wishes to request the review of the data to re-evaluate the reasonable potential. The limits or monitoring frequency cannot be changed unless the permit is modified which would allow for public comment.

Thermal Limits

The draft permit allows USS Midwest to create a new thermal model to ensure compliance. IDEM is including a reopener clause in the permit to review the modeling data. USS Midwest .is given 24 months to create a model, and IDEM will conduct its review within 90 days thereafter. Save the Dunes would like to shorten the period for USS Midwest to complete its model, and we want IDEM to clarify what will occur if IDEM is unable to review the model within 90 days of receipt.

Response 3: Thermal Limits

Compliance with the temperature limits at the Midwest facility is currently demonstrated by using a model. During this permit renewal IDEM staff determined that this model was no longer appropriate to use unless it could be updated and approved for use by IDEM. As an alternative to US Steel submitting a model for review IDEM has designated a location where US Steel can show compliance with the thermal limits in the permit. The timeframes in the permit were considered to be suitable for the level of effort required to submit and review the model or install a permanent temperature measuring point downstream of the discharge points.

Enforcement Schedule

We request a written explanation of the frequency with which federal and state inspections of this facility have occurred in the past and will occur in the future. Save the Dunes is concerned that the general public is likely not aware that for the most part, companies are trusted with monitoring themselves. Knowing these schedules will provide comfort that the company's protocols are adequate and that they are addressing violations appropriately.

Response 3: Enforcement Schedule

The frequency of inspections is determined by the Wastewater Inspections Section and the contact number for any questions concerning these inspections is 317-234-2579.

Acute and Chronic Toxicity

In the Fact Sheet it states that no acute toxicity has been demonstrated for biomonitoring, and as such, a Water Quality Based Effluent Limit (WQBEL) was only developed for chronic Whole Effluent Toxicity at Outfall 004. Chronic toxicity has been demonstrated for two aquatic species including fathead minnow. Save the Dunes asks IDEM to require both acute and chronic toxicity to protect human and ecological receptors. We would also like the permit to state what corrective action would be taken should acute or chronic toxicity be found during the permit period.

Response 3: Acute and Chronic Toxicity

A reasonable potential analysis from a 2010 Waste Load Allocation, determined in accordance with 327 IAC 5-2-11.5(b) that there was no reasonable potential to exceed the numeric interpretation of the narrative criterion for acute Whole Effluent Toxicity (WET). The provision under 327 IAC 5-2-11.6(d) allows a case-by-case determination of whether to establish a WQBEL for only acute or chronic WET, or WQBELs for both acute and chronic WET, whereby the former applies in this case. A Toxicity Reduction Evaluation (TRE) Schedule of Compliance in Part I.F.2. details what corrective action is to be taken when toxicity is demonstrated. It should be noted that in the whole effluent toxicity section of the permit there is a provision for demonstration of acute toxicity (1.0 TUa).

Whole Effluent Toxicity

We ask that the Whole Effluent Toxicity measurement, a critical measure of acute and chronic toxicity, not be taken just for the first three months of the permit and then every three months thereafter for the life of the permit
— we ask for the initial frequency to continue through the permit period.

Response 3: Whole Effluent Toxicity

The chronic toxicity test shall be conducted quarterly for the duration of the permit. IDEM has determined that this frequency is appropriate. The three initial monthly tests are used mainly to determine the more sensitive species. If toxicity is demonstrated in that initial period then a toxicity reduction evaluation may be required.

Total Maximum Daily Load (TMDL) for Cyanide

We believe that according to the Clean Water Act, IDEM is required to develop a TMDL for cyanide since the Portage-Burns Waterway is on the state impaired waters list — 303(d) — for this toxin and the fact that its biotic communities are impaired. Save the Dunes would like to see a TMDL for cyanide included in this permit, and without it, the "assimilative capacity" mentioned in the permit will be impossible to define.

Response 3: Total Maximum Daily Load (TMDL) for Cyanide

A TMDL is required for parameters for which that segment of the waterway the permittee discharges to is impaired. It is not impaired for free cyanide at the location but IDEM notes the concern for having a TMDL for cyanide for the Portage-Burns Waterway.

Storm water

We are glad to see non-numeric standards for stormwater included in this permit. However, we urge IDEM to go beyond the non-numeric standards by including specific numeric requirements in the permit. The Stormwater Pollution Prevention Plan does not specify the amount by which pollutants should be reduced — it simply states that reductions should occur. We need numeric targets here.

Also, no timeframe is specified for USS Midwest to develop a narrative description of existing and planned management practices to improve water quality and stormwater runoff. This permit has been extended for fifteen years, and USS Midwest has long been aware of the need for such a narrative. We request that the permit language be strengthened to specify this be completed within six months of permit issuance.

Response 3: Storm water

EPA has determined that non-numeric Technology-Based Effluent Limits are equal to BPT/BAT/BCT for Stormwater associated with industrial activity. The Non-Numeric Stormwater Conditions and Effluent Limits contain the technology-based effluent limitations. Effective implementation of these requirements should meet the applicable water quality based effluent limitations. The non-numeric requirements of the permit contain effluent limitations, defined in the CWA as restrictions on quantities, rates, and concentrations of constituents which are discharged. Violation of any of these effluent limitations constitutes a violation of the permit. The requirement to prepare a SWPPP is not an effluent limitation, rather it documents what practices the discharger is implementing to meet the effluent limitations in Part I.D. of the permit. The SWPPP is not an effluent limitation because it does not restrict quantities, rates, and concentrations of constituents which are discharged. Instead, the requirement to develop a SWPPP is a permit "term or condition" authorized under sections 402(a)(2) and 308 of the Act. Section 402(a)(2) states, "[t]he Administrator shall prescribe conditions for [NPDES] permits to assure compliance with the requirements of paragraph (1) of this subsection, including conditions on data and information collection, reporting, and such other requirements as he deems appropriate." The SWPPP requirements set forth in this permit are terms or conditions under the CWA because the discharger is documenting information on how it intends to comply with the effluent limitations (and inspection and evaluation requirements) contained elsewhere in the permit. Thus, the requirement to develop a SWPPP and keep it updated is no different than other information collection conditions, as authorized by section 402(a)(2), in other permits.

The permittee will have 12 months from the effective date of the permit to develop and implement the stormwater permit conditions in Part I.D. and the Storm Water Pollution Prevention Plan (SWP3) in Part I.E.

If in the future IDEM does not see improvements then some form of benchmark requirements may be added to the permit.

Permit Boundary

We would like clarification as to whether the permit governs lands previously owned by USS Midwest on the west side of Burns Waterway, including the warehouses and Training Center.

Response 3: Permit Boundary

IDEM will look into the property boundaries of the U.S. Steel Midwest facility.

Cooling Water Intake Structures.

We would like to see the analysis of the data USS provided regarding the impacts from the operation of the cooling water intake structures.

Response 3: Cooling Water Intake Structures.

Rationale in determining the the best technology available for cooling water intake structures (CWIS) is provided in Section 5.9 of this fact sheet.

Definitions

Some subjective terms are included in the permit. The term "practicable" is used in the permit on page 18, top paragraph, and page 31, #7. Also, the term "reasonable times" is used on page 56, #15C. The term "if feasible" is used on page 28 of the Fact Sheet. The frequency of cooling water intake structure inspections is described as "normal." Please provide legal definitions.

Response 3: Definitions

See response to Comment 10.

Comment 4:

Constantine J Dillon, Superintendent
National Park Service, United States Department of Interior

Cumulative Impacts

The National Environmental Policy Act (NEPA) requires that secondary and cumulative impacts be assessed when they are reasonably foreseeable. It is unrealistic for IDEM to issue, simultaneously, two major NPDES permits, U.S. Steel (No. IN0000337) and ArcelorMittal (No. IN0000 175), both of which discharge to the same waterway in very close proximity and not expect cumulative impacts. Failure by IDEM to holistically consider these potential effects is a disservice to the public and threatens the cultural, historical and ecological resources of the national lakeshore.

Burns Waterway, the conveyance these facilities discharge into, is heavily contaminated by both current and relic uses including the continual input of municipal wastewater. We understand that U.S. Steel no longer discharges onsite sanitary water, but this should not preclude the discussion of potential additive effects of wastewater impacts in conjunction with thermal effluent. Potential effects of thermal effluent

should address lethal, sub-lethal, avoidance, and attractive nuisance effects on all aspects of the aquatic resources.

Both the United States Geological Survey and the NPS have measured and identified a sustained bacteriological problem in the waterway and its corresponding effects on the recreational use of the adjacent NPS owned property, Portage Lakefront and Riverwalk. While US Steel no longer directly contributes to bacteriological contamination through its discharge, it does contribute synergistically to the systemic problem and an evaluation of these effects should be addressed.

The interlinking of these two permits does not appear to be completely lost by IDEM as both draft permits were placed on public comment simultaneously, even going to the extent of initially scheduling a single public hearing to accommodate both permits. It is unfortunate that IDEM only acknowledges the similarity and proximity of the two permits by expediting the permitting process and not by assessing cumulative and or synergistic impact.

Impingement / Entrainment 316(b)

The current permit language delegates the responsibility of providing solutions for impingement and entrainment to the permittee and supplies little to no actual guidance. The language is so vaguely written as to allow almost any action to be acceptable. We urge IDEM and EPA to definitively address this ongoing problem and develop specific requirements to minimize the loss of millions of larval and adult fish annually.

Response 4:

Cumulative Impacts

The 2010 Waste Load Allocation drafted by IDEM took into account the combined effects of this facility and ArcelorMittal Burns Harbor.

Impingement / Entrainment 316(b)

IDEM continues to work closely with the EPA to develop specific requirements to minimize the effects of impingement and entrainment.

Comment 5:

Senator Karen Tallian
Indiana State Senate
District 4

I am writing this letter in support of the United States Steel Corporation! Midwest Plant draft NPDES permit renewal which was noticed for public comment by IDEM.

U. S. Steel purchased the Midwest Plant in 2003, and since that time, has made significant improvements to the plant and contributions to community. Approximately 800 highly compensated employees and a large number of retirees work or worked at the Midwest Plant and contribute to the economy of

Northwest Indiana. Additionally, U. S. Steel also supports many suppliers and vendors in Northwest Indiana.

A renewed permit will allow U. S. Steel to continue its economic contribution to this community and most importantly the permit will improve the water quality in Lake Michigan. The 2010 draft permit provides more stringent standards than the current permit for the protection of human health and the environment. I support this both as a State legislator, and as a resident. This plant happens to be approximately one half mile from my house.

I respectfully request that the Midwest NPDES permit be approved.

Response 5:

IDEM appreciates your comments.

The following comments were submitted at the Public Hearing held on December 14th 2010:

Comment 6:

Liz Teague
Policy Associate
Alliance for the Great Lakes

The sheer vastness of the Great Lakes makes it hard to imagine that there are perils that can permanently damage the lakes that we hold so dear, yet the Great Lakes are vulnerable to the discharges of pollutants that occur every day. Discharges from U.S. Steel into Lake Michigan directly impact the lakes and the millions of people that depend on the lakes for drinking water, employment, and recreation.

The Alliance appreciated the opportunity to meet with IDEM to have questions answered about the U.S. Steel permit, and the Alliance greatly appreciates U.S. Steel hosting a meeting for the Alliance and other groups to provide additional information about the permit and related plant processes. The Alliance urges IDEM to modify the draft permit to include the following: Concentration limitations for chromium, lead, and zinc discharges from compliance point 304, a compliance schedule for construction of the chromium treatment plant, and more specific requirements relating to storm water to minimize the impediment to water quality caused by storm water runoff.

According to the preliminary data set of the toxic release inventory for 2009 U.S. Steel discharges 800 pounds of chromium, 157.78 pounds of lead, and 160 pounds of zinc per year into the Portage Burns Waterway, yet at compliance point 304 the draft permit does not contain concentration limitations for these pollutants. It simply contains a reporting requirement.

Hexavalent chromium which is a type of chromium in U.S. Steel's wastewater can cause chrome ulcers and potentially cancer. Lead can damage the nervous and reproductive systems, and zinc overdoses can cause nausea and vomiting. In order to adequately protect public health IDEM should include concentration limitations for chromium, lead, and zinc.

According to the fact sheet accompanying the draft permit U.S. Steel has submitted plans to construct a new chromium treatment plant to reduce total chromium loading to the Portage Burns Waterway for

which the Alliance applauds U.S. Steel. However, the draft permit does not contain a compliance schedule to insure that the new chrome treatment plant is actually built during the period covered by this permit. A compliance schedule should be added to the permit to insure that the construction moves forward in a timely manner towards the reduction in total chromium loading.

Part I, Section D, Paragraph 1 which covers -- of the permit which covers storm water monitoring and non-numeric effluent limits include the term minimization as defined for the section; however, in order to determine whether pollutant discharges are truly minimized this section should contain numeric goals.

Finally, although the inclusion of non-numeric standard for storm water to the permit is a welcome addition both the storm water monitoring and storm water pollution prevention plan sections of the permit need to contain more specific measurable requirements.

In addition I want to briefly address Indiana's antidegradation rules. On page 17 of the fact sheet IDEM states that it used a non-rule policy document for its antidegradation analysis: A non-ruled policy document that the Alliance and other groups have strongly criticized.

Indiana must adopt final antidegradation rules for use in such analysis rather than continually relying upon non-rule policy documents.

The Alliance will supplement my statement with additional written comments prior to the deadline. Thank you for your time.

Response 6:

See Response 3 of the comments submitted by Save the Dunes.

Comment 7:

Gerald Funk
Worley Parsons

First of all I want to thank you for the opportunity to speak tonight and demonstrate my support for the proposed NPDES permit. As a vendor at U.S. Steel I know personally the importance of the Midwest plant not only to our business but the entire region. We handle -- what my company does, we handle the engineering and project management for U.S. Steel's large capital projects.

I'm a project manager on site currently at the Midwest plant. So before I go on I wanted to thank the USEPA and the Indiana Department of Environmental Management for insuring this permit will protect Lake Michigan and its surrounding tributaries.

As a son of a steelworker and lifelong resident of Northwest Indiana I understand the importance not only that U.S. Steel has for the region but also the importance of protecting our environment. U.S. Steel has been an important part of the community for over a hundred years and the Midwest plant has been for over 50 years.

U.S. Steel has consistently demonstrated its commitment to environmental stewardship by investing hundreds of millions of dollars to modernize facilities and implement the latest technologies to minimize the environmental impacts on our national resources.

It is my belief that we can have a strong manufacturing base in Northwest Indiana and still protect the environment. This permit will allow us to do so. The success of our company though is we employ their families, the community in which we live, and our economy depend on the success of the Midwest plant. Therefore, I am here to urge IDEM to issue this permit. Thank you.

Response 7:

IDEM appreciates your comments.

Comment 8:

Gene Hankey
Plant Manager
U.S. Steel Midwest facility

On behalf of the more than 6,000 U.S. Steel employees in Indiana I thank you for this opportunity to speak here today.

The Midwest plant is a part of the U.S. Steel Gary Works: The nation's largest integrated steel-making facility in the Midwest. The Midwest plant was purchased from National Steel in 2003 and serves as a finishing facility that employ more than 800 men and women who make high quality steel and value added Steels.

U.S. Steel has a long history of steel-making and operations in Indiana, and we are committed to continuing these operations. We require this permit to do so.

Environmental stewardship is a core value at U.S. Steel and something we take very seriously. We are committed to insuring that the Midwest plant is an active partner in our region's environmental community. This is because we live here; our families live here; our friends live here, and we want to enhance the sustainability of our community.

Part of our commitment to environmental stewardship is our dedication to being in compliance with all environmental rules and regulations. We've invested significant resources to meet increasingly strict environmental standards and are 100 percent committed to being in compliance with the 2010 draft NPDES permit.

The draft NPDES permit provides more stringent standards than the current permit for protection of the human health and the environment. Key components of the draft permit include the elimination of two discharge locations from the facility, more than twice as many reporting requirements than the current permit, nearly 50 percent increase in a number of monitoring parameter over the current permit, and three additional monitoring points in outfalls 102, 103, and 204.

As I stated we are committed to full environmental compliance. We'll continue to work with IDEM, USEPA, and environmental stakeholders and the community to insure our compliance with this draft permit and to improve the water quality in Lake Michigan and the Burns Waterway.

Thank you.

Response 8:

IDEM appreciates your comments.

Comment 9:

Patty Baron-Polk
Account Manager
Chem Treat, Incorporated

I am the account manager for Chem Treat, Incorporated, and have been involved in the U.S. Steel Midwest plant for ten plus years. My company is involved in treating water for performance and environmental needs for U.S. Steel Midwest as well as many other industrial companies within the area. We work closely with U.S. Steel Midwest to help insure water quality standards are met and continuous improvement, goals developed, and implemented.

Every day the emphasis is on safety and environment first then production. U.S. Steel Midwest's compliance record of 99.9 percent with the existing NPDES permit standards demonstrates the plants stellar environmental stewardship. I am proud of the proactive attitude and commitment U.S. steel takes and implements in order to protect the environment and insure compliance with water standards.

During the past 20 years I have watched as many Northwest Indiana and South Chicago mills have been devastated and closed. The remaining mills continue to do business due to their strong commitment to their customers, their communities they work in, and to the environment in which they operate. The U.S. Steel Midwest plant is one of the leading companies we must continue to count on for our region's continued success at all levels.

The new permit draft will continue to challenge U.S. Steel Midwest to invest in the environment while more closely guarding Lake Michigan. Simply stated passing the new permit will allow everyone to win. I am confident U.S. Steel is committed to meeting and exceeding the new permit as they have in the past. We need this mill for the viability of the region. I support this new permit and hope the EPA, IDEM, and the community will as well.

Response 9:

IDEM appreciates your comments.

Comment 10:

Nicole Kamins
Executive Director
Save the Dunes

Thanks to IDEM for driving up today in the cold. I'm glad the weather wasn't as awful as we expected. I also want to thank IDEM for being so proactive in setting up the review meeting with the environmental groups for this permit and the ArcelorMittal permit, and I want to say thanks also to U.S. Steel for setting up their own review meeting.

Despite the fact that we have many concerns and will not always agree with IDEM on these matters I wanted to say that we appreciate their professional, thorough, and respectful manner in responding to our questions.

Save the Dunes has long been known in this region as a key champion of protecting water quality. Clean water matters to us and our members who live, work, and recreate in Northwest Indiana. It matters to us that our waters are fishable, swimmable, and accessible to all people. People creatures, and plants rely on uncontaminated water, of course.

U.S. Steel Midwest discharges into Burns Ditch and in turn to Lake Michigan. The Great Lakes are one of the most precious fresh water systems in the world, and the health of our Lakes and our Lake Michigan in particular are critical for not only our health but also our economy as was previously mentioned. Many industries and businesses are dependant on it which means thousands of jobs depend on it being a healthy sustainable resource too.

From our perspective we can do better than what is shown in these permits. We owe it to ourselves and to future generations to ask that these processes become cleaner over time; that we work towards lowering the contaminates that are in the water; not just saying we haven't increased contamination releases.

There are technologies that exist elsewhere in the world that are close to zero discharge, and I believe that we should bring those technologies right here to Northwest Indiana because we deserve it.

Here are some of our specific thoughts on the permit:

IDEM acknowledges in the fact sheet that for some reason permit limits for cadmium, copper, nickel, silver, and total toxic organics were excluded from the last permit. It is shocking to know that this oversight occurred, and since this permit has been extended 15 years I hate to think of what pollution may have occurred during this period.

IDEM states that antidegradation does not apply since the new limits for these items were authorized under the old permit and therefore are authorized under the new permit. But the old limits were not part of the permits; they were just authorized under it. This seems to me to be a loophole to define these as not being new discharges. I must stress the importance here of the State of Indiana creating its antidegradation rules; it's very important.

I also want to know when the new chrome treatment plant will be built within the permit period of five years. What will happen to the discharge in the interim? What if the period of the permit is

administratively extended for 15 years as this one has been? Could it go that long without addressing this important contaminant? We hope to have IDEM compress this time line and provide clear instructions for what will happen if the permit expires and is extended.

For oil and grease the permit says if it is measured above five milligrams per liter then the source of it needs to be investigated and eliminated if feasible. If it's above five milligrams per liter is it a violation? And what is legally meant by feasible?

There's a reasonable potential to exceed the water quality effluent limits for free cyanide. U.S. Steel's data set was limited so IDEM has included a reopening clause for this. They can exhibit more data in essence for IDEM to review here. The recommended monitoring is two times per month for ten months. Is this enough data? What if exceedences are found during this period? What corrective action will be mandated? How long do they have to do this study? We urge IDEM to require be completed within 12 months.

The permit history indicates violations for pH and presence of foam and coloration. Was any enforcement action taken on these issues? We want IDEM to conduct stringent enforcement from here going forward. As was referenced earlier IDEM allows U.S. Steel to create a new thermal model to insure compliance. They're allowing a reopening clause for this review. I'm wondering why 24 months are needed to create this model considering there must be similar models for mills elsewhere. Is there any way to tighten this time frame and clarify what will happen if the permit gets extended and how compliance can be insured?

I'm also requesting a written explanation of the frequency with which federal and state inspections will occur at the facility now and in the -- or in the past and in the future. Knowing these schedules will provide comfort that the protocols are adequate and that they are addressing violations appropriately.

In the fact sheet it says that no acute toxicity has been demonstrated for bio-monitoring and as such a water quality based effluent limit was not developed for chronic whole effluent toxicity at outfall four. Chronic toxicity has been demonstrated for two aquatic species including fathead minnow. Wouldn't IDEM want to be conservative here and require both acute and chronic toxicity to be measured? Further, we would like to see the data set that was used to determine the chronic toxicity. What if there is chronic toxicity during the monitoring period? What are the ramifications in terms of enforcement? Why not also increase the monthly whole effluent toxicity testing which now is stated to have to occur once every three months.

New mass limits for total residual chlorine were calculated for three outfalls. Free cyanide and silver were also calculated for a fourth. It refers to an Appendix E for the data, but that wasn't included in the document. We would like to review this data. The language allows U.S. Steel one year to develop and implement its storm water permit conditions. It has been 15 years; can't this time line be compressed? Can IDEM explain its analysis of the data U.S. Steel provided regarding the impacts from the operation of the cooling water intake structures? The frequency of annual inspections and maintenance are described as, quote, unquote, normal. Please define this.

And just as my last comment there is some subjective terms included in the permit. The term practicable is used in the permit on page 18, top paragraph, and page 31, No. 7; how is this enforced? Also the term reasonable times is used on page 56, No. 15-C. The term if feasible is used on page 28 of the fact sheet. Please provide legal definitions.

Thank you for your time.

Response 10:

Permit conditions for the anticipated chrome treatment plant go into effect upon issuance of this permit regardless of the time frame of the construction of the new treatment plant and will remain throughout an administrative extension of the permit if one were to occur. However, IDEM anticipates a letter confirming the completion of the facility and if conditions require a change in permit limits or conditions, a modification and public notice will be required.

If oil and grease is measured in the effluent in significant quantities, the source of such discharge is to be investigated and eliminated. The facility is required to investigate and eliminate any significant or measured concentration of oil and grease (quantities in excess of 5 mg/l). The intent of this requirement is to assure that oil and grease is not added to once-through cooling water in measurable quantities (5 mg/l). The term "feasible", with regards to oil and grease, was used in the Fact Sheet and is meant to clarify a scenario of attempted remediation in the event there was an excursion, as opposed to a legal definition within the permit language. It was used in a general definition of the word.

Two times per month for period of ten months provides enough data for another calculation for a Reasonable Potential to Exceed (RPE) the State's water quality standards. The limits go into effect upon issuance of this permit, thus any violation will go to compliance. This study is required upon the permittee's request to recalculate an RPE, therefore, there is no time limit to make a request to calculate and RPE to remove the limits for free cyanide.

Enforcement actions may be followed on the following link:

http://www.epa-echo.gov/echo/compliance_report_water_icp.html

The frequency of inspections is determined by the Wastewater Inspections Section and the contact number for any questions concerning these inspections is 317-234-2579.

With respect to bio-monitoring, see Response to Comment 3.

A copy of the Waste Load Allocation listed as Appendix E was made available on the IDEM website and will be included in the final permit. IDEM has determined that one year is needed to meet these new stormwater requirements. Rationale in determining the best technology available for cooling water intake structures (CWIS) is provided in Section 5.9 of this fact sheet. Inspections are commonly performed on an annual basis. Technology-based effluent limitations for stormwater requirements are enforcement by monitoring and inspections. The expression "reasonable times" and "feasible" are not legally defined by this permit or the fact sheet.

Comment 11:

Chris Hoham
Test America

As an environmental testing laboratory we see firsthand the great effort put forth by U.S. Steel to clean and protect the environment each day and the work that IDEM is doing as a regulating agency to insure this compliance. I have to commend both parties on all they have accomplished. I appreciate the opportunity to be here today and to demonstrate my support for the U.S. Steel Midwest NPDES permit.

As a vendor of the Portage facility I know personally the importance of this facility not only to my business but also to the entire region. I grew up in Ogden Dunes spending summers on the beach with the Midwest plant as a neighbor. From a personal perspective keeping the beaches and the waters of Lake Michigan clean will always be important to me.

The Test America lab in Valparaiso, Indiana, has been working with U.S. Steel Gary Works for over 20 years and more recently with the Midwest plant in Portage. Our employees are involved in various aspects of sampling, analyzing, and reporting results for the environmental samples required by NPDES permits.

One of the ways our laboratory experiences the increased requirements of this new permit is the need to analyze samples using latest methods and technologies. One example is in the past 12 months our facility has brought on line a new method to analyze effluent samples for hexavalent chromium as some of the lowest detection limits available.

The increased reporting requirements have contributed to Test America's corporate decision to invest in new software for our location for producing reports required by NPDES permits. Improved automation in reporting software will add a level of quality assurance not only to our service to U.S. Steel but the reporting process for the State of Indiana. None of these investments at my facility would be made without the commitment by U.S. Steel to look forward to improvements in their processes which will bring about improvements in the environment.

As a person who grew up on the beaches of Lake Michigan and Northwest Indiana I appreciate U.S. Steel's commitment to the Midwest plant as a viable and competitive steel-producing facility while remaining a steward of the environment. U.S. Steel has consistently demonstrated its commitment to environmental stewardship by investing millions of dollars in modernized facilities and advanced technologies to minimize environmental impacts on our national resources.

The local businesses are following their lead as evidenced by Test America's investments supporting these same goals. I believe we can have a strong manufacturing base in this region and still protect the environment, and this permit will allow that to continue. The success of our company, those we employ, their families, the community in which we live, and our economy depend on the success of a strong manufacturing base. We must insure U.S. Steel Midwest remains a strong, competitive, and productive employer in Northwest Indiana. I urge IDEM to issue this permit.

Thank you.

Response 11:

IDEM appreciates your comments.

Comment 12:

Kay Nelson
Director of Environmental Affairs
Northwest Indiana Forum

I'm the director of Environmental Affairs of the Northwest Indiana Forum, and I thank you for the opportunity tonight to comment on the issuance of the proposed U.S. Steel Midwest plant NPDES permit. The Northwest Indiana Forum is a non-profit regional economic development organization servicing the counties of Lake, Porter, LaPorte, Stark, Newton, Jasper, and Pulaski counties, and our focus is on the retention of quality employment opportunities that sustain and enhance our environment and our quality of life for the residents in Northwest Indiana.

Protection of the environment while enhancing the region's global competitive position is the highest priority for our members. The Forum is pleased that the proposed permit being considered for the United States Steel Midwest plant reflect the following: An increase in reporting requirements and an approximate 50 percent increase in the number of monitored parameters and the addition of three monitoring points.

Receipt of technically, scientifically, and legally based environmental permits are crucial to our nation's quality of life and global competitiveness. American businesses must be certain that the state and federal agencies execute their roles and responsibility in a fashion whereby the receipt of an environmental permit allows for the continuance and/or expansion of a facility to occur without interruption following permit issuance. Referred to as permitting certainty the lack of such certainty can negatively impact investment decisions related to long-term capital improvement and expansion projects.

As such the Northwest Indiana Forum supports the issuance of quality environmental permits by IDEM such as the one proposed for U.S. Steel Midwest plant, and we thank you for the opportunity to provide our comments.

Response 12:

IDEM appreciates your comments.

Comment 13:

Larry Davis

I'd like to thank the Indiana Department of Environmental Management for this opportunity to submit comments. I'd also like to thank IDEM's staff that took time to meet and answer questions for several hours on December 2nd, 2010.

I'm requesting IDEM to please extend the comment period on this permit. I think it's pretty interesting that we're hearing tonight that this environmental protection is actually creating investments and jobs; usually we hear the exact opposite arguments.

What a wonderful Christmas present it is to have not one but two NPDES permits for major dischargers of waterborne pollutants to comment on at the same time. So since IDEM has chosen to public notice both ArcelorMittal and U.S. Steel Midwest Division's NPDES permits at the same time I think it would be interesting to compare a few notes.

In the case of U.S. Steel Midwest Division's NPDES permit we have a recognized deficiency in a wastewater treatment plant and a corporate commitment to construct a new treatment plant to not only enhance wastewater treatment and compliance but also to add redundancy into the treatment facility so as to have adequate treatment at all times. And I think U.S. Steel needs to be commended for that effort.

In the case of ArcelorMittal's NPDES permit we have a 45-year-old wastewater treatment plant that is incapable of meeting today's water pollution limits and no corporate commitment to upgrade the treatment facility to enhance wastewater treatment or compliance; instead we have an ongoing non-compliance in 10 of the last 12 quarters and variances from water pollution limits needed because of a lack of adequate wastewater treatment capabilities.

In the case of U.S. Steel Midwest Division's NPDES permit we have a discharge being eliminated by choosing instead to treat the wastewater that used to be discharged; of course in the case of ArcelorMittal's permit we have no such activities.

In the case of U.S. Steel Midwest Division's NPDES permit the company offered a transparent participation process including a public meeting with a presentation followed by a question and answer session. In the case of ArcelorMittal's permit we have no such process offered.

I think it's important in these hearings to state the first two goals of the Clean Water Act. The first goal is that it's the national goal that the discharge of pollutants into the navigable waterways be -- excuse me -- navigable waters be eliminated by 1985.

The second goal is that the national goal that whenever attainable an interim goal of water quality which provides for protection of propagation of fish, shellfish, and wildlife, and provides for recreation in and on the water be achieved by July 1st, 1983.

Now I think it's important that we monitor at all these discharge points and points of compliance for internal outfalls for all known pollutants that are present. And in 1982 the United States Environmental Protection Agency published the final development document for effluent limitation guidelines and standards for the iron and steel manufacturing point source category. And I've submitted in my comments tables of the toxic pollutants known to be present.

Now, quickly, toxic priority pollutants is a list of 126 pollutants. We know that there are currently approximately 40,000 chemicals used in the Great Lakes Basin, and approximately 2,300 new chemicals are submitted to the EPA for registration every year. The EPA studied the available data on these chemicals and found that they have very little information on these effects of these chemicals. So it's very important that we actually monitor these discharges.

The only other comment I have tonight besides I've asked for specific limitations to be monitored in my comments is to make a comment on these Wastewater Treatment chemicals that are used. The pollutants that are introduced by using these Wastewater Treatment chemicals need to also be accounted for in the NPDES permit, especially their fate and what happens to them in the environment, whether or not they are toxic, and whether or not they are bio-cumulative.

Most wastewater chemicals are sold on a commission basis and the more used, even if not necessary, the more money the chemical company makes regardless of the fate of those chemicals once discharged. Often water and wastewater treatment chemicals can be avoided entirely and better results achieved with simple devices. A couple examples would include sacrificial anodes with trickle currents to prevent corrosion in water systems. Ultra violet water treatment systems to kill biological water contaminates with light instead of toxic biocides and process specific raw water pretreatment.

If we pretreat the water supply a lot of times you don't need to use these chemicals. And what's happened in a lot of cases is the inadequacy of the older treatment plants is being made up for by producing a lot of these chemicals in increasing amounts to try to meet the water quality standards. So we have very little data on a lot of these chemicals that are being utilized for water treatment, and we need to take that into account when we're issuing these NPDES permits.

Thank you, and I'll submit further comments later.

Response 13:

IDEM had extended the regular period for comment from 30 to 45 days and determined that time frame to be adequate for public comment.

IDEM notes the importance of monitoring discharges for water treatment chemicals. All permittees are required to disclose information on the water treatment additives in use and to demonstrate that such additives will not be harmful to aquatic life. This is done through a formal review of each water treatment additive from an application for approval, whereby IDEM must approve the chemical and the proposed manner in which it is utilized before a permittee can use it.

Comment 14:

Patrick Gorman
Facilitator
Indiana Steel Environmental Group

The Indiana Steel Environmental Group is a coalition of Indiana steel companies established to focus on environmental matters of concern to its members. The Indiana Steel Environmental Group consists of membership from ArcelorMittal U.S.A., Incorporated, ArcelorMittal Indiana Harbor, United States Steel Gary Works, United States Steel Midwest Plant, ArcelorMittal Burns Harbor, and New Core Steel Crawfordsville.

Together these companies operate facilities in Indiana that produce over 18 million tons of steel annually and directly employ over 10,000 people; in addition, it's estimated that an additional 100,000 people are employed by other firms that provide services to these facilities. As a result these facilities provide a significant contribution to both the state and national economy. These companies operate facilities that

require NPDES discharge permits or industrial pretreatment discharge permits. For years Indiana has not reissued NPDES discharge permits for major industries when they expired. As a result Indiana has had a large number of expired NPDES permits that were administratively extended.

Over the past six years the Indiana Department of Environmental Management has worked to reduce the number of administratively extended permits in Indiana and has reduced the backlog of expired permits from 236 to just five permits. The Indiana Steel Environmental Group strongly supports Indiana's goal to reduce the backlog of these expired permits that have been administratively extended. The Indiana Steel Environmental Group strongly believes the NPDES permitting process should be carried out in full accordance with the established provisions contained in the Clean Water Act and Indiana's administrative code not more or less.

The Clean Water Act provides an established framework for issuing permits that has been incorporated within Indiana's administrative code through significant public review. Comment and EPA's final approval that this code contains at least all of the required elements mandated by the Clean Water Act. It is totally inappropriate to have an established and approved regulatory mechanism for issuing permits and that to selectively abandon the process based on public emotion or the perception of a few. The ground rules developed for the permitting process were established many years ago based on sound science. They were open for public review and discussion and received EPA's approval before they could be implemented. These rules must now continue to be followed.

In summary the Indiana Steel Environmental Group urges the USEPA to support the process stated issuing timely and NPDES permits that are protective of human health and environment under the Clean Water Act with limits developed and supported by sound science. These permits properly issued and protective of human health and environment are in everybody's best interest.

Thank you for your respectful consideration of these comments.

Response 14:

IDEM appreciates your comments.

Comment 15:

Susan Mihalo
Chair of the Ogden Dunes Environmental Advisory Board
Town of Ogden Dunes

We're very thrilled that this permit has finally been let out for the public to review since it was expired in 1995 and it brings it up to the latest water quality standards. At the same time we're wondering why there's such urgency in comparison to that to have the comment period end at the end of this year, and we would really love to see Commissioner Easterly give us that extra consideration that Save the Dunes asked for way back on December 1st. We really need to get an answer about having an extra 15 days that was requested to review the permit.

There are some concerns we have about cumulative effects of both the U.S. Steel Midwest and the ArcelorMittal permits especially since there are bio-cumulative toxins like mercury in the waterway. And

while effluent limitations have been developed for these parameters, and I recognize that these facilities are doing a lot of very good volunteer efforts to reduce mercury, there is one piece of the puzzle I think that is really missing from this permit and from any kind of permitting in this area and that is total maximum daily loads have not been developed for the Burns Waterway for many of the parameters that are listed in the permits.

I believe the only TMDL that has been developed is for e coli and so it's a big -- as I said -- a big piece of the puzzle that's missing especially in the area of mercury to help understand the cumulative impact on the Burns Waterway and on Lake Michigan watersheds. Both watersheds are listed as impaired for mercury, so TMDL's are really critical especially since Lake Michigan provides drinking water for more than six million people.

And I just wanted to say that we will submit some additional comments and, again, we hope that we'll have that extra 15 days to do so.

Thank you.

Response 15:

IDEM had extended the regular period for comment from 30 to 45 days and determined that time frame to be adequate for public comment.

IDEM notes the request and concern to have more parameters to be developed under a TMDL.

Comment 16:

Charlotte Read

IDEM gave us the reasoning that they are having put out both these permits at the same time so that – because they both impact Portage Burns Waterway. I would suggest that it would have been helpful for the agency to put forth an analysis of the combined discharges. It's one thing to say, gee folks, here are two permits for you to review by December 27th, and it would have been helpful to better understand the cumulative impact if they had done an analysis, and I would say it's probably not too late. Even you could work until December 26th and we could get it out.

The impact of the discharge -- actually both discharges on the Ogden Dunes water intake owned by Indiana American, both the discharges to the west of Portage Burns Waterway, and that does not seem to have been taken into account in the permits, which I have not carefully studied. I still have a few more days until after Christmas.

The old Midwest plant before U.S. Steel took it over used to treat discharges from discharges on the west side of Portage Burns Waterway. I assume -- I have been told that that is no longer the practice, and I hope that is true, which would mean then that especially Amrox has to discharges since they're a very close neighbor of the U.S. Steel on the east side, so that their discharges whatever they may happen to be are not being treated by the Midwest plant.

The old green belt one landfill unlined and full of lots of nasty stuff, which is not part of the U.S. Steel purchase, not part of the U.S. Steel plant, but I'm wondering is there -- it seems hard to believe that what

is being leached into the groundwater from that unlined mess has not been -- has not been impacting Portage Burns Waterway. That may not be a U.S. Steel problem, but I think it's a citizen problem and it could very well be a Lake Michigan problem.

U.S. Steel has now developed a facility that's now a neighbor of a newly developed facility of the Indiana Dunes National Lake Shore, and I hope that encourages U.S. Steel to do even more to improve their discharges.

I know that the storm water pollution prevention plan, which is included in this permit, which I think is a very good idea, appears not to include U.S. Steel property on the west side of Portage Burns Waterway. I understand that there are no company manufacturing facilities there, but if storm water is not captured there it should be included in the plan.

I hope that this permit will be issued under the current Great Lakes Basin rules for discharges in the Great Lakes Basin and not delayed until the long pending -- and I do mean long pending -- new antidegradation rules are still being developed.

A quick glance at the permit and comparing this draft permit with the practices that we know that the previous permittee did carry on, this seems to be definitely a great improvement over what was issued by IDEM in 1995.

Thank you.

Oh, and I want to say I thank U.S. Steel for having a pre-permit meeting. I wasn't able to make it, but they should be complimented -- should be complimented wherever you are for engaging the citizens in an informal and interesting and informative way.

Response 16:

IDEM took into account the cumulative impact of both discharges in drafting these permits.

The U.S. Steel, Midwest plant, no longer discharges sanitary wastewater through this NPDES permit.

IDEM notes the comment pertaining to a Greenbelt I landfill, however, landfill leachate treated at Outfall 104 is from the Greenbelt II landfill and is covered under this permit.

IDEM will review the facility layout to see if it includes the west side of Portage Burns Waterway and if it needs to be included in the stormwater monitoring requirements.

This permit was developed under the current Great Lakes Basin requirements and anticipates the renewal to be issued promptly in the future.

STATE OF INDIANA
DEPARTMENT OF ENVIRONMENTAL MANAGEMENT

PUBLIC NOTICE NO. 2011 – 1H -F

DATE OF NOTICE: January 31, 2011

For information about your rights and responsibilities pertaining to the Public Notice process and timeframes, please visit IDEM websites: **http://www.in.gov/idem/5474.htm and IDEM Citizen Guide: http://www.in.gov/idem/5803.htm.**

The Office of Water Quality issues the following **MAJOR INDUSTRIAL NPDES PERMIT RENEWAL:**

U.S. STEEL CORPORATION, MIDWEST PLANT, Permit No. IN0000337, PORTER COUNTY, 6300 U.S. Route 12, Portage, IN 46368. This industrial facility finishes coils received from other U.S. Steel plants into cold rolled, galvanized chromium or tin plated strip and sheet products. Activities at the permitted facility include acid pickling, cold rolling, alkaline cleaning, operation of a sheet temper mill, continuous annealing, electro-galvanizing, and tin electroplating. This facility discharges 103.21 million gallons per day of process wastewater, contact cooling water, non-contact cooling water, and storm water into the Portage-Burns Waterway (Burns Ditch). The sanitary wastewater from the permitted facility is now directed to the City of Portage WWTP. A complete listing and description of outfalls and discharge points are detailed in the final Permit and Fact Sheet. Permit Writer: Matt Carmichael at 317/233-5961 or mcarmich@idem.IN.gov.

APPEAL PROCEDURES FOR FINAL PERMITS

The Final Permit is available for review & copies at IDEM/Office of Water Quality, IGCN 1255, 100 N Senate Ave, INDPLS, IN - from 9 – 4, M - F (copies 10¢ per page). To request an E mail copy, send to Damita Ivey at divey@idem.in.gov. The Permit is also available at the local County Health Department. **Please tell others you think would be interested in this matter.** For your rights and responsibilities go to http://www.in.gov/idem/5474.htm; Citizen Guide: http://www.in.gov/idem/5803.htm.

Appeal Procedure: Any person affected by the issuance of the Final Permit may appeal by filing a Petition for Administrative Review with the Office of Environmental Adjudication **within** eighteen (18) days of the date of this Public Notice. Any appeal request must be filed in accordance with IC 4-21.5-3-7 and must include facts demonstrating that the party requesting appeal is the applicant; a person aggrieved or adversely affected or is otherwise entitled to review by law.

Timely filing: The Petition for Administrative Review must be received by the Office of Environmental Adjudication (OEA) **within** 18 days of the date of this Public Notice; either by U.S. Mail postmark or by private carrier with dated receipt. This Petition for Administrative Review represents a request for an Adjudicatory Hearing, therefore must:

- state the name and address of the person making the request;
- identify the interest of the person making the request;
- identify any persons represented by the person making the request;
- state specifically the reasons for the request;
- state specifically the issues proposed for consideration at the hearing;
- identify the Final Permit Rule terms and conditions which, in the judgment of the person making the request, would be appropriate to satisfy the requirements of the law governing this NPDES Permit rule.

If the person filing the Petition for Administrative Review desires any part of the NPDES Final Permit Rule to be stayed pending the outcome of the appeal, a Petition for Stay must be included in the appeal request, identifying those parts to be stayed. Both Petitions shall be mailed or delivered to the address here:
Phone: 317/232-8591.

Environmental Law Judge
Office of Environmental Adjudication
IGC – North Building- Rm 501
100 N. Senate Avenue
Indianapolis IN 46204

Stay Time frame: If the Petition (s) is filed **within** eighteen (18) days of the mailing of this Public Notice, the effective date of any part of the permit, within the scope of the Petition for Stay is suspended for fifteen (15) days. The Permit will become effective again upon expiration of the fifteen (15) days, unless or until an Environmental Law Judge stays the permit action in whole or in part.

Hearing Notification: Pursuant to Indiana Code, when a written request is submitted, the OEA will provide the petitioner or any person wanting notification, with the Notice of pre-hearing conferences, preliminary hearings, hearing stays or orders disposing of the Petition for Administrative Review. Petition for Administrative Review must be filed in compliance with the procedures and time frames outlined above. Procedural or scheduling questions should be directed to the OEA at the phone listed above.