ATTACHMENT I - FACILITY OUTFALL LOCATION MAP

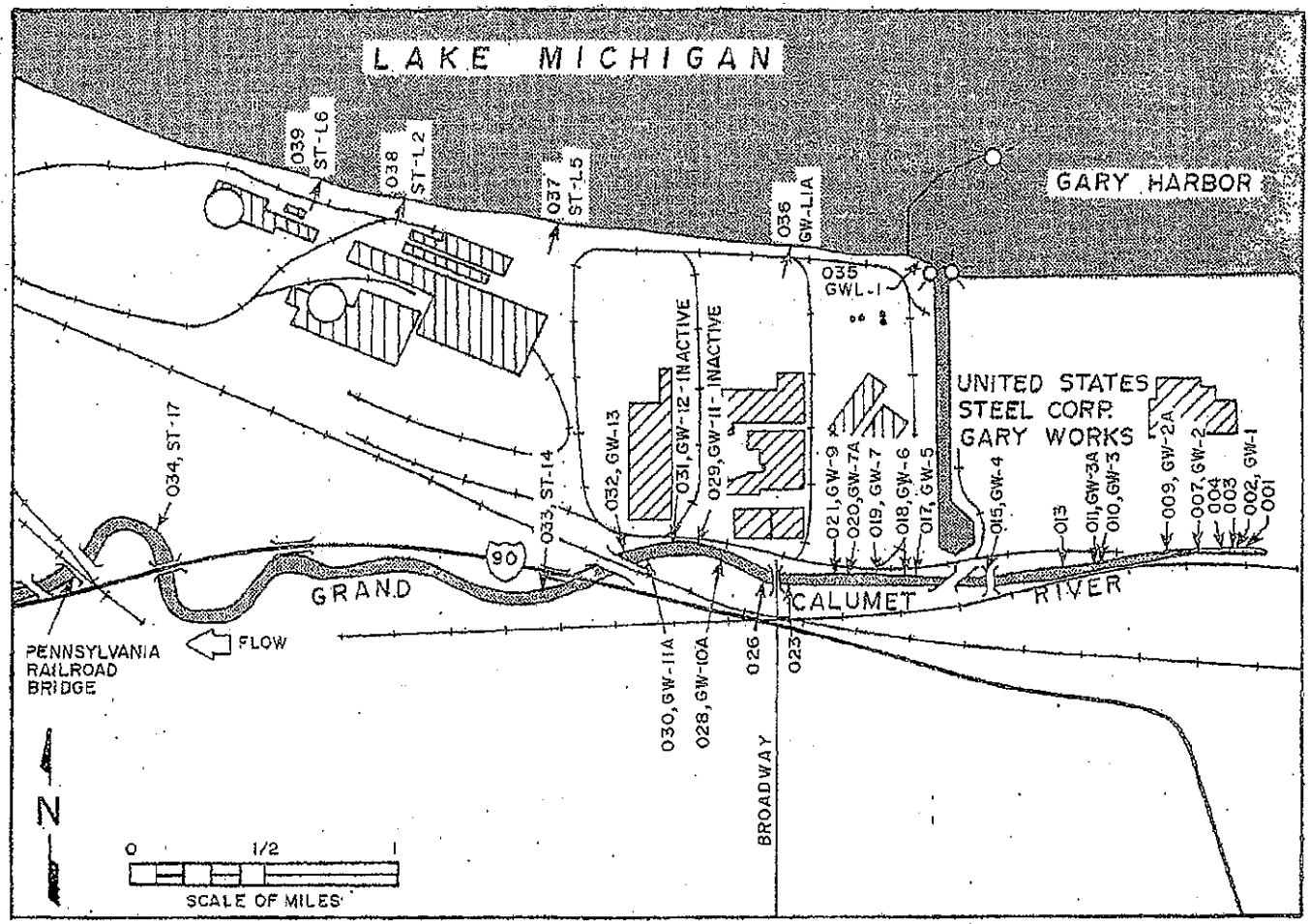

Outfall Locations of U.S. Steel Gary Works

ATTACHMENT II - LINE DISHCARGE DRAWINGS

United States Steel – Gary Works
One North Broadway – MS 70-A
GARY, IN 46402

Certified Mail: 7002 2410 0001 9318 9173

November 26, 2008

Mr. Stan Rigney
Office of Water Quality
Indiana Department of Environmental Management
100 North Senate Avenue
Indianapolis, IN 46204

Mr. Rigney:

United States Steel – Gary Works (USS) is enclosing Line Discharge Drawings (LDDs) that reflect the outfall closures. As depicted on the LDDs, the following outfalls will be permanently closed:

- USS anticipates the closure of Outfall 017 will occur by June 30, 2009. Regardless, there will be no discharge once the permit becomes effective. The closure of the outfall is being engineered by USS Engineering (Request 66110);
- USS anticipates the closure of Outfall 040 will occur by June 30, 2009. Regardless, there will be no discharge once the permit becomes effective. The closure of the outfall is being engineered by USS Engineering (Request 66130); and
- Outfall 508 (Blast Furnace Recycle blowdown water) will also be permanently closed and therefore limitations and monitoring requirements associated with Outfall 508 can be removed from the permit.

In addition, Outfall 607 will continue to discharge to 015 and will not be rerouted to 501 as previously discussed with IDEM. Lastly, Outfall 036 was transferred from USS to ArcelorMittal and can be removed from the permit.

USS anticipates that with this submittal IDEM has all of the necessary information requested during the meeting of October 30, 2008. If you have any questions regarding this submittal, please feel free to contact Randy Kreutzer via telephone at 219.888.3369 or via electronic mail at RDKreutzer@uss.com.

Sincerely,

Kenneth L. Mentzel

Enclosures

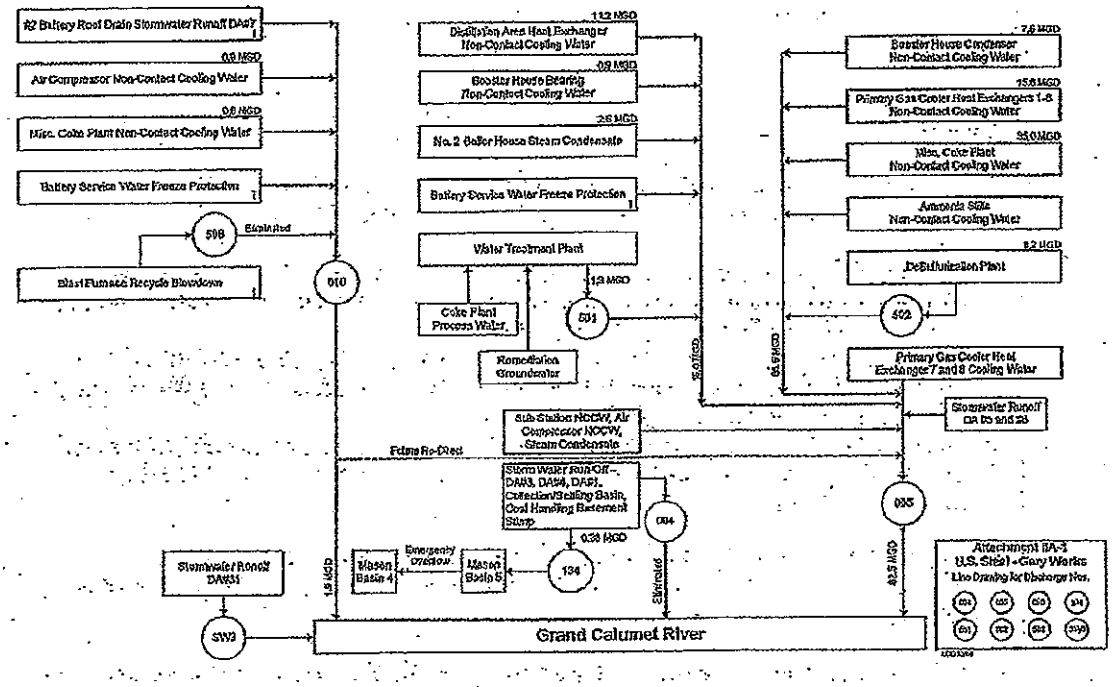
#2 Battery Roof Drain Stormwater Runoff DA#7
0.8 MGD
Air Compressor Non-Contact Cooling Water
0.8 MGD
Misc. Coke Plant Non-Contact Cooling Water
Battery Service Water Freeze Protection
508
Eliminated
Blast Furnace Recycle Blowdown
010
1.12 MGD
Desulfuration Area Heat Exchanger Non-Contact Cooling Water
.09 MGD
Booster House Bearing Non-Contact Cooling Water
2.6 MGD
No. 2 Boiler House Steam Condensate
Battery Service Water Freeze Protection
Water Treatment Plant
1.3 MGD
Coke Plant Process Water
501
Remediation Groundwater
25.0 MGD
7.6 MGD
Booster House Compressor Non-Contact Cooling Water
15.8 MGD
Primary Gas Cooler Heat Exchangers 1-6 Non-Contact Cooling Water
55.0 MGD
Misc. Coke Plant Non-Contact Cooling Water
Amoco Site Non-Contact Cooling Water
8.2 MGD
Demineralization Plant
502
Primary Gas Cooler Heat Exchanger 7 and 8 Cooling Water
Stormwater Runoff DA 25 and 26
Site Station NCCW, Air Compressor NCCW, Steam Condensate
Prime Re-Direct
Storm Water Run Off - DA#3, DA#4, DA#1, Collection/Settling Basin, Coal Handling Basement Sump
0.38 MGD
004
035
134
Stormwater Runoff DA#31
1.8 MGD
Mason Basin 4
Emergency overflow
Mason Basin 5
Eliminated
42.5 MGD
Attachment BA-3
U.S. Steel - Gary Works
Line Drawing for Discharge Nos.
SW3
Grand Calumet River

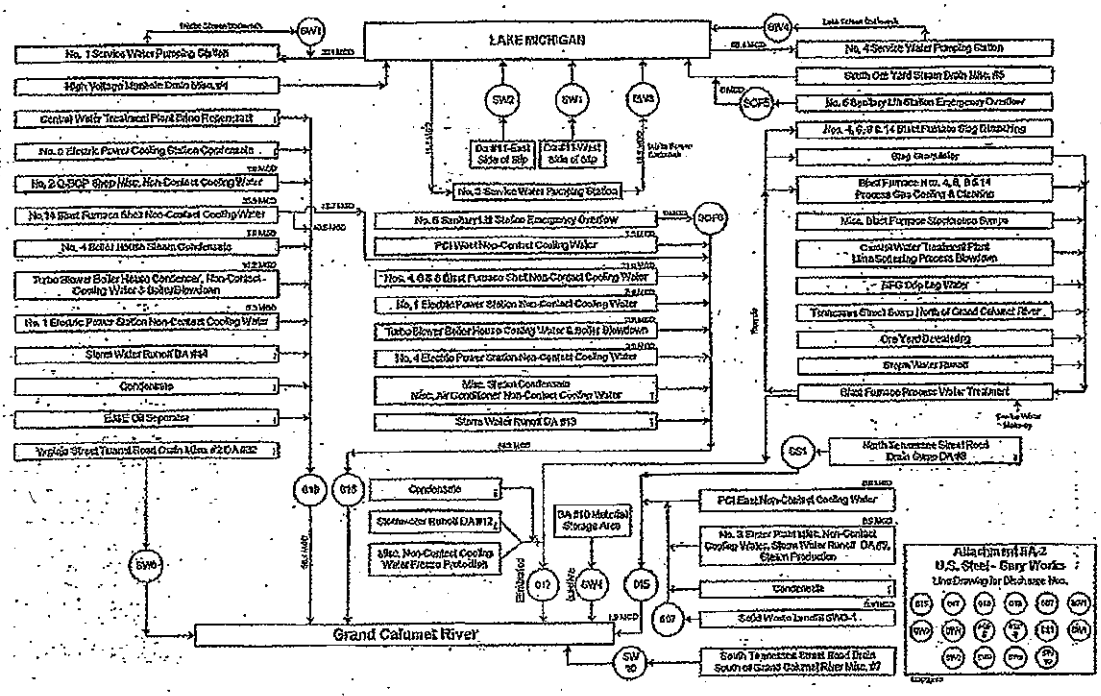
LAKE MICHIGAN
Grand Calumet River
No. 1 Service Water Pumping Station
No. 4 Service Water Pumping Station
No. 3 Service Water Pumping Station
Sixth Ave Yard Steam Drain Mile #5
No. 6 Sanitary Lift Station Emergency Overflow
Blast Furnace Process Water Treatment
Condensate
Solid Waste Landfill SWD-1
South Tennessee Street Road Drain South of Grand Calumet River Mile #7
Attachment A-2
U.S. Steel - Gary Works
Line Drawing for Discharge No.

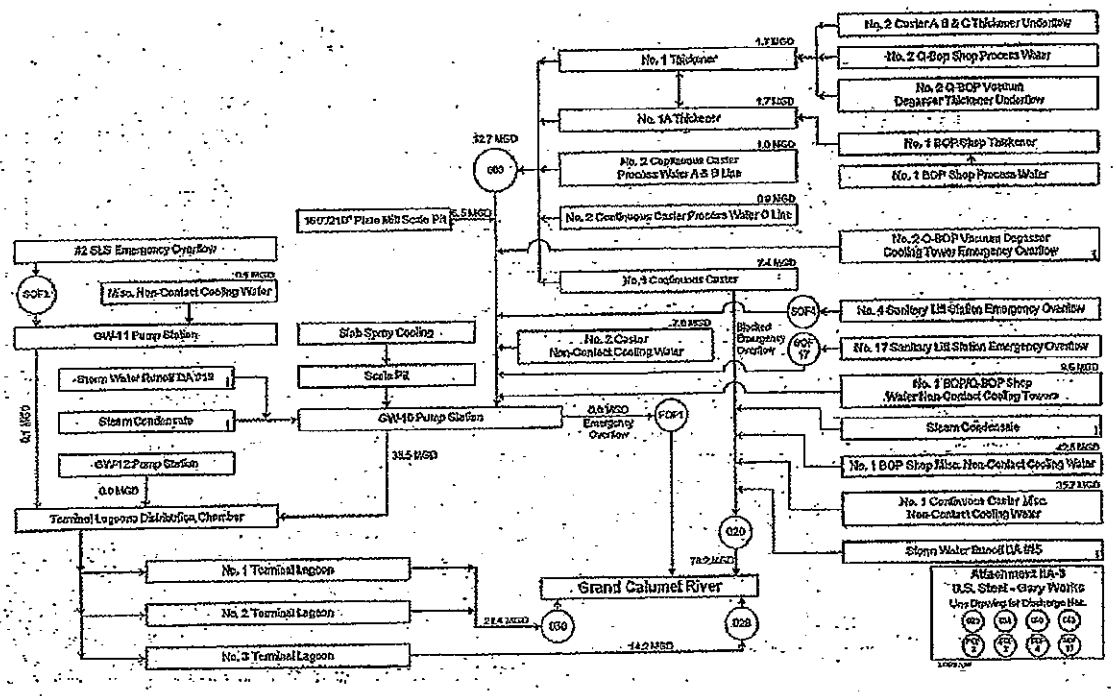
No. 2 Caster A & C Thickener Underflow
No. 2 Q-BOP Shop Process Water
No. 2 Q-BOP Vacuum Degasser Thickener Underflow
No. 1 BOP Shop Thickener
No. 1 BOP Shop Process Water
No. 1 Thickener
1.7 MGD
No. 1A Thickener
1.7 MGD
32.7 MGD
003
No. 2 Continuous Caster Process Water A & B Line
1.0 MGD
No. 2 Continuous Caster Process Water C Line
0.9 MGD
150"/210" Plate Mill Scale Pit
6.5 MGD
No. 2 Q-BOP Vacuum Degasser Cooling Tower Emergency Overflow
#2 SLS Emergency Overflow
SOF1
Misc. Non-Contact Cooling Water
0.4 MGD
GW-11 Pump Station
7.1 MGD
No. 3 Continuous Caster
SOF4
No. 4 Sanitary Lift Station Emergency Overflow
Slab Spray Cooling
No. 2 Caster Non-Contact Cooling Water
7.0 MGD
Blocked Emergency Overflow
SOF 17
No. 17 Sanitary Lift Station Emergency Overflow
Scale Pit
No. 1 BOP/Q-BOP Shop Water Non-Contact Cooling Towers
9.5 MGD
Storm Water Runoff DA 012
Steam Condensate
GW-10 Pump Station
0.6 MGD Emergency Overflow
FOF1
Steam Condensate
6.1 MGD
GW-12 Pump Station
35.5 MGD
No. 1 BOP Shop Misc. Non-Contact Cooling Water
0.0 MGD
Terminal Lagoons Distribution Chamber
No. 1 Continuous Caster Misc. Non-Contact Cooling Water
020
Storm Water Runoff DA #5
No. 1 Terminal Lagoon
No. 2 Terminal Lagoon
No. 3 Terminal Lagoon
Grand Calumet River
21.4 MGD
030
028
14.2 MGD
Attachment HA-3
U.S. Steel - Gary Works
Unit Drawing for Discharge Hist.

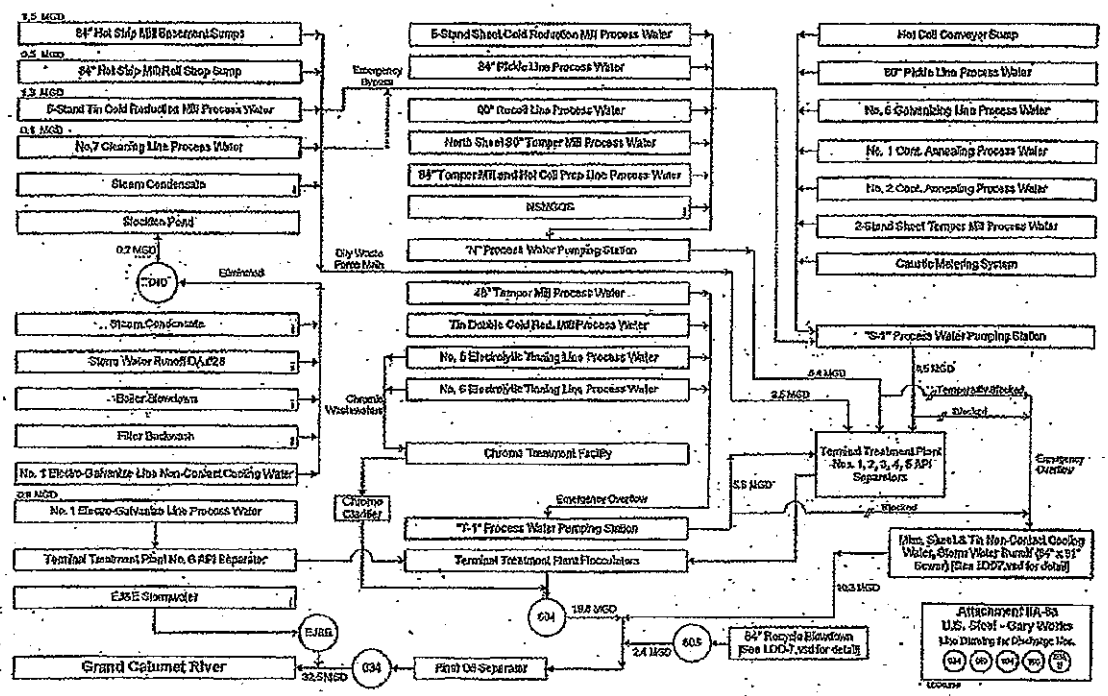
84" Hot Strip Mill Basement Sumps
84" Hot Strip Mill Roll Stop Sump
5-Stand Tin Cold Reduction Mill Process Water
No. 7 Cleaning Line Process Water
Steam Condensate
Stockton Pond
Steam Condensate
Storm Water Runoff DA-028
Boiler Blowdown
Filter Backwash
No. 1 Electro-Galvanize Line Non-Contact Cooling Water
No. 1 Electro-Galvanize Line Process Water
Terminal Treatment Plant No. 6 API Separator
E35E Stormwater
Grand Calumet River
Emergency Bypass
Dry Waste Force Main
Eliminated
Chrome Wastewater
Chrome Clarifier
5-Stand Sheet Cold Reduction Mill Process Water
84" Pickle Line Process Water
80" Recoil Line Process Water
North Sheet 80" Temper Mill Process Water
84" Temper Mill and Hot Coil Prep Line Process Water
NSNGOS
"N" Process Water Pumping Station
48" Temper Mill Process Water
Tin Double Cold Red. Mill Process Water
No. 5 Electrolytic Tinning Line Process Water
No. 6 Electrolytic Tinning Line Process Water
Chrome Treatment Facility
Emergency Overflow
"T-1" Process Water Pumping Station
Terminal Treatment Plant Flocculators
Final Oil Separator
Hot Coil Conveyer Sump
80" Pickle Line Process Water
No. 6 Galvanizing Line Process Water
No. 1 Cont. Annealing Process Water
No. 2 Cont. Annealing Process Water
2-Stand Sheet Temper Mill Process Water
Caustic Metering System
"S-1" Process Water Pumping Station
Temporarily Blocked
Blocked
Terminal Treatment Plant Nos. 1, 2, 3, 4, 5 API Separators
Emergency Overflow
Blocked
Misc. Sheet & Tin Non-Contact Cooling Water, Storm Water Runoff (54" x 51" Sewer) (See LDD7.vsd for detail)
84" Recycle Blowdown (See LDD-7.vsd for detail)
Attachment IIA-53
U.S. Steel - Gary Works
Line Diagram for Discharge Nos.
034
005
004
006
008
009
LDD2.vsd

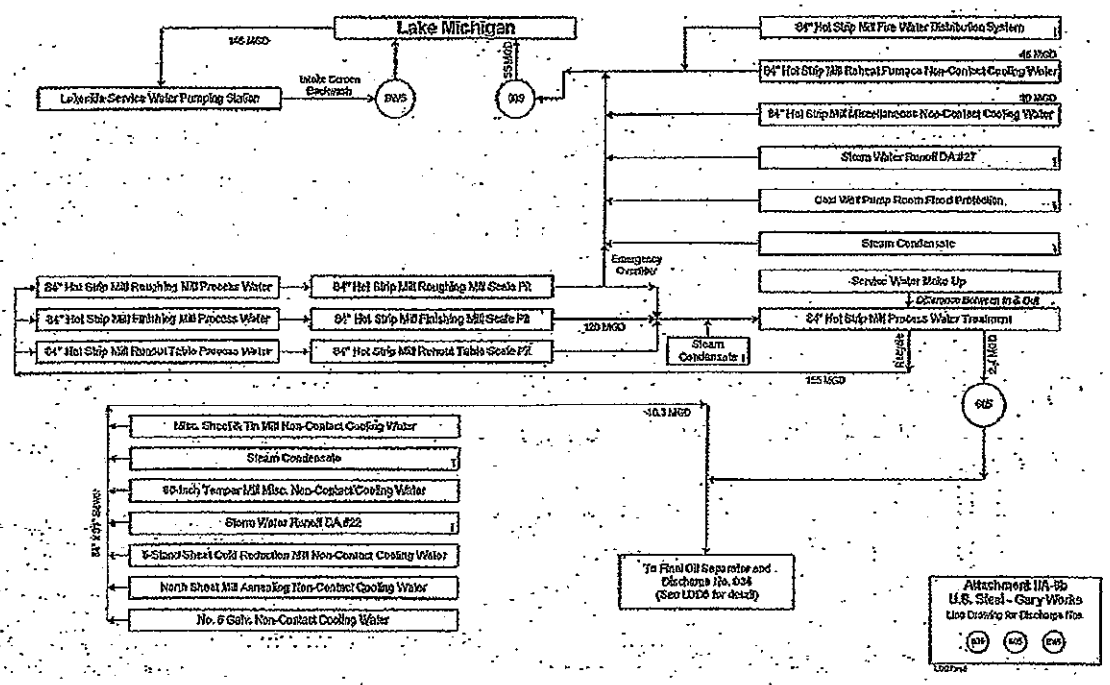
Lake Michigan
145 MGD
Lake Michigan Service Water Pumping Station
Intake Screen Backwash
EWS
155 MGD
009
84" Hot Strip Mill Fire Water Distribution System
46 MGD
84" Hot Strip Mill Reheat Furnace Non-Contact Cooling Water
10 MGD
84" Hot Strip Mill Miscellaneous Non-Contact Cooling Water
Steam Water Runoff DA #27
Coal Mill Pump Room Flood Protection
Steam Condensate
Emergency Overflow
Service Water Make Up
Difference Between In & Out
84" Hot Strip Mill Roughing Mill Process Water
84" Hot Strip Mill Roughing Mill Scale Pit
84" Hot Strip Mill Finishing Mill Process Water
84" Hot Strip Mill Finishing Mill Scale Pit
84" Hot Strip Mill Runout Table Process Water
84" Hot Strip Mill Runout Table Scale Pit
125 MGD
Steam Condensate
84" Hot Strip Mill Process Water Treatment
Sludge
2.7 MGD
155 MGD
015
10.3 MGD
Misc. Sheet & Tin Mill Non-Contact Cooling Water
Steam Condensate
80-Inch Temper Mill Misc. Non-Contact Cooling Water
Steam Water Runoff DA #22
I-Slant Sheet Cold Reduction Mill Non-Contact Cooling Water
North Sheet Mill Annealing Non-Contact Cooling Water
No. 6 Galv. Non-Contact Cooling Water
84" Hot Strip Mill
To Final Oil Separator and Discharge No. 034 (See UDS for detail)
Attachment IIA-5b
U.S. Steel - Gary Works
Line Drawing for Discharge Pipe
034
005
EWS

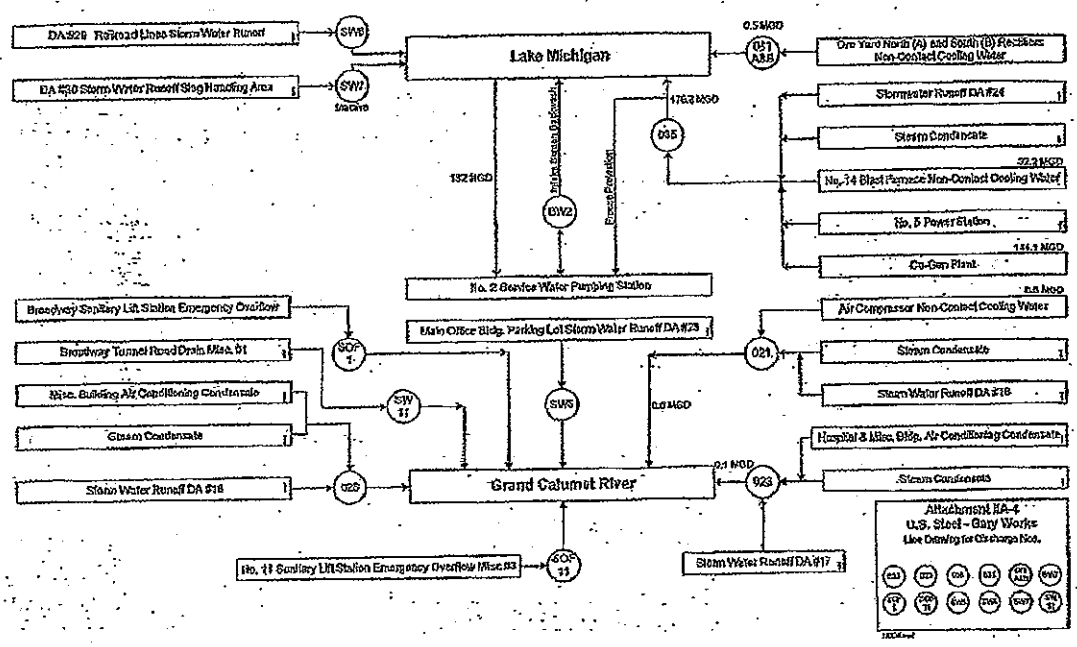
DA#28 Railroad Lines Storm Water Runoff
SW6
DA #30 Storm Water Runoff Slag Handling Area
SW7
Lake Michigan
0.5MGD
031 A&B
Ore Yard North (A) and South (B) Facilities Non-Contact Cooling Water
Stormwater Runoff DA #24
Steam Condensate
No. 14 Blast Furnace Non-Contact Cooling Water
No. 5 Power Station
Co-Gen Plant
176.3 MGD
035
132 MGD
DW2
No. 2 Service Water Pumping Station
Broadway Sanitary Lift Station Emergency Overflow
Broadway Tunnel Road Drain Misc. 01
SOF 1
Misc. Building Air Conditioning Condensate
SW 11
Steam Condensate
Steam Water Runoff DA #18
025
Main Office Bldg. Parking Lot Storm Water Runoff DA #23
SW5
0.6 MGD
Air Compressor Non-Contact Cooling Water
021
Steam Condensate
Steam Water Runoff DA #18
Hospital & Misc. Bldg. Air Conditioning Condensate
Steam Condensate
Grand Calumet River
0.1 MGD
023
No. 11 Sanitary Lift Station Emergency Overflow Misc.03
SOF 11
Storm Water Runoff DA #17
Attachment IA-4
U.S. Steel - Gary Works
Line Drawing for Discharge Nos.

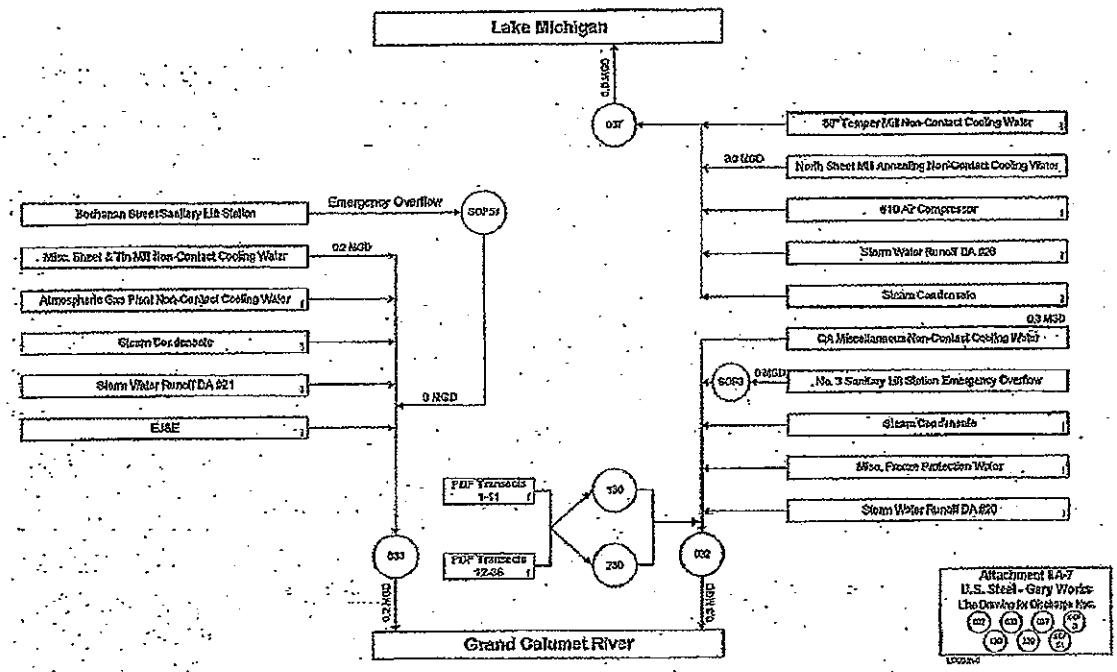
Lake Michigan
037
50" Temper Mill Non-Contact Cooling Water
North Sheet Mill Annealing Non-Contact Cooling Water
#10 AP Compressor
Storm Water Runoff DA #26
Storm Condensate
0.3 MGD
CA Miscellaneous Non-Contact Cooling Water
0.2 MGD
No. 3 Sanitary Lift Station Emergency Overflow
Steam Condensate
Misc. Frame Protection Water
Storm Water Runoff DA #20
Emergency Overflow
Bochanan Street Sanitary Lift Station
Misc. Sheet & Tin Mill Non-Contact Cooling Water
0.2 MGD
Atmospheric Gas Final Non-Contact Cooling Water
Steam Condensate
Storm Water Runoff DA #21
0 MGD
E&E
PDF Transects 1-11
PDF Transects 12-26
150
230
002
033
0.2 MGD
0.2 MGD
Grand Calumet River
Attachment IA-7
U.S. Steel - Gary Works
Line Drawing for Outfalls Nos.

ATTACHMENT III

TECHNOLOGY-BASED EFFLUENT LIMITATIONS

Technology Based Effluent Limiations

US Steel Gary Works

Internal Monitoring Station 501

Effluent Limitation (lbs/day)

Guideline Process	Production (tons/day)	TSS Max	TSS Ave	Oil and Grease Max	Oil and Grease Ave	Ammonia-N Max	Ammonia-N Ave	Cyanide Max	Cyanide Ave	Phenols (4AAP) Max	Phenols (4AAP) Ave	Benzene Max	Benzene Ave
40 CFR 420.14(a) Cokemaking	3,950	0.172	0.0894	0.00638	--	0.0543	0.016	0.00638	0.00351	0.0000638	0.0000319	0.0000319	--
		1,359	**706**	**50.40**		429.0	126.4	50.40	**27.7**	0.50	**0.25**	**0.25**	

Naphthalene Max	Naphthalene Ave	Benzo(a)pyrene Max	Benzo(a)pyrene Ave
0.0000319	--	0.0000319	--
0.25		**0.25**	

Note: The citation to 40 CFR 420.14(a) is to the New Source Performance Standards (NSPS) promulgated in 1982.

Guideline Process	Production (tons/day)	TSS Max	TSS Ave	Oil and Grease Max	Oil and Grease Ave	Ammonia-N Max	Ammonia-N Ave	Cyanide Max	Cyanide Ave	Phenols (4AAP) Max	Phenols (4AAP) Ave	Benzene Max	Benzene Ave
40 CFR 420.13(a) Cokemaking See (1)	3,950	NA SEE Above	NA See Above	NA See Above	--	0.00293	0.00202	0.00297	0.00208	0.0000381	0.0000238	NA See Above	--
						40.4	**27.9**	**41.0**	28.7	**0.5**	0.3		

Naphthalene Max	Naphthalene Ave	Benzo(a)pyrene Max	Benzo(a)pyrene Ave
0.0000111	0.00000616	0.0000110	0.00000612
0.15	0.09	0.15	0.08

See (1)

Note: The citation to 40 CRF 420.13(a) is to the revised BAT Standards promulgated in 2002.

(1) Per 40 CFR 420.13(a), increased loading not to exceed 44.2%, shall be provided for the portion of the water used for optimization of coke plant biological wastewater treatment systems. Of the approximate 701 gpm of coke plant biological system influent at USS Gary Works, 439 gpm consiste of water used for optimization. This is approximately 62.3 %, however the guideline only allows up to 44.2%.
Per 40CRF 420.13(a)(2), increased loading shall be provided for coke plant groundwater remediation waters. USS adds approximately 80 gpm of groundwater Therefore, Gary Works will be allowed an increase in limitations to account for coke plant area groundwater remediation. 80/262 = 30.5%

Technology Based Effluent Limitations

US Steel Gary Works

Internal Monitoring Station 603

Effluent Limitation (lbs/day)

Guideline Process	Production (tons/day)	Lead Max	Lead Ave	Zinc Max	Zinc Ave
40 CFR 420.42/43 #1 BOP	11,112	0.000413 9.18	0.000138 3.07	0.00062 13.78	0.000207 4.60
40 CFR 420.42/43 Q-BOP (#2 Q-BOP)	14,008	0.000413 11.6	0.000138 3.9	0.00062 17.4	0.000207 5.8
40 CFR 420.64 Vacuum Degassing	5,922	0.0000939 1.11	0.0000313 0.37	0.000141 1.67	0.0000469 0.56
40 CFR 420.62/63 No. 1 Continuous Casting	6,643	0.0000939 1.06	0.0000313 0.35	0.000141 1.59	0.0000469 0.53
40 CFR 420.64 No. 2 Continuous Casting	16,824	0.0000939 3.16	0.0000313 1.05	0.000141 4.74	0.0000469 1.58
40 CFR 420.72(c)(2) 160"/210" Plate Mill	2,797				
Total		26.1	8.7	39.1	13.1

Technology Based Effluent Limitations

US Steel Gary Works

Outfalls 028/030

Effluent Limitation (lbs/day)

Guideline Process	Production (tons/day)	TSS Max	TSS Ave	Oil and Grease Max	Oil and Grease Ave
40 CFR 420.42/43 #1 BOP	11,112	0.0687 1,527	0.0229 509	-	-
40 CFR 420.42/43 Q-BOP (#2 Q-BOP)	14,008	0.0687 1,924	0.0229 641	-	-
40 CFR 420.54 Vacuum Degassing	5,922	0.0073 86.46	0.00261 30.91	-	-
40 CFR 420.62/63 No. 1 Continuous Casting	5,643	0.078 880.31	0.026 293.44	0.0234 264.09	0.0078 88.03
40 CFR 420.64 No. 2 Continuous Casting	16,824	0.0073 245.63	0.00261 87.82	0.00313 105.32	0.00104 34.99
40 CFR 420.72(c)(2) 160"/210" Plate Mill	2,797	0.227 1,269.84	0.0851 476.05	0.0568 317.74	–
Total		5,933	2,038	687.1	123.0

Technology Based Effluent Limiations Internal Monitoring 604

US Steel Gary Works

Effluent Limitation (lbs/day)

Guideline Process	Production (tons/day)	TSS Max	TSS Ave	Oil and Grease Max	Oil and Grease Ave	Hex. Chromium Max	Hex. Chromium Ave	Lead Max	Lead Ave	Zinc Max	Zinc Ave	Napithalene Max	TCE Max
40 CFR 92/93(b)(2) + (b)(4)	2,273	0.0818	0.035	0.035	0.0117			0.000526	0.000175	0.000701	0.000234		
80" South Pickle Line		372	159	159	53			2.39	0.80	3.19	1.06		
Fume Scrubber	1	12.61	5.40	5.40	1.81			0.08	0.03	0.11	0.04		
		12.61	5.40	5.40	1.81			0.08	0.03	0.11	0.04		
40 CFR 92/93(b)(2) + (b)(4)	7,730	0.0818	0.035	0.035	0.0117			0.000526	0.000175	0.000701	0.000234		
84" North Pickle Line		1,265	541	541	181			8.13196	2.7055	10.83746	3.61764		
Fume Scrubber	1	12.61	5.40	5.40	1.81			0.08	0.03	0.11	0.04		
		12.61	5.40	5.40	1.81			0.08	0.03	0.11	0.04		
40 CFR 420.92/93(b)(2)	884	0.0818	0.035	0.035	0.0117			0.000526	0.000175	0.000701	0.000234		
No. 1 Electrogalvanizing Line		144.6	61.88	61.88	20.69			0.93	0.31	1.24	0.41		
40 CFR 420.92/93(a)(3)	391	0.0526	0.0225	0.0225	0.00751			0.000338	0.000113	0.000451	0.00015		
No. 1 Tin free Steel Line		41.1	17.60	17.60	5.87			0.26	0.09	0.35	0.12		
40 CFR 420.92/93(a)(3)	489	0.0526	0.0225	0.0225	0.00751			0.000338	0.000113	0.000451	0.00015		
No.5 Electrolytic Tinning Line		51.4	22.0	22.0	7.3			0.3	0.1	0.4	0.1		
40 CFR 420.92/93(a)(3)	1,109	0.0526	0.0225	0.0225	0.00751			0.000338	0.000113	0.000451	0.00015		
No.6 Electrolytic Tinning Line		116.7	49.9	49.9	16.7			0.7	0.3	1.0	0.3		
40 CFR 420.102/103(a)(5)	2,059	0.100	0.0501	0.0417	0.0167			0.000751	0.000250	0.000501	0.000167	0.000167	0.000250
No.2 Stand Temper Mill		411.6	206.3	171.7	68.8			3.1	1.0	2.1	0.7	0.7	1.0
40 CFR 420.102/103(a)(4)	3,977	0.0225	0.0113	0.00939	0.00376			0.000169	0.0000563	0.000113	0.0000376	0.0000376	0.0000563
80" Temper Mill		179.0	89.9	74.7	29.9			1.3	0.4	0.9	0.3	0.3	0.4
40 CFR 420.102/103(a)(4)	1,413	0.0225	0.0113	0.00939	0.00376			0.000169	0.0000563	0.000113	0.0000376	0.0000376	0.0000563
80" Recoil line		63.6	31.9	26.5	10.6			0.5	0.2	0.3	0.1	0.1	0.2
40 CFR 420.102/103(a)(2)	7,634	0.00626	0.00313	0.00261	0.00104			0.0000469	0.0000156	0.0000313	0.0000104	0.0000104	0.0000156
No.5 Stand Cold Reduction Mill		95.6	47.8	39.9	15.9			0.7	0.2	0.5	0.2	0.2	0.2
40 CFR 420.102/103(a)(2)	2,425	0.00626	0.00313	0.00261	0.00104			0.0000469	0.0000156	0.0000313	0.0000104	0.0000104	0.0000156
No.6 Stand Cold Reduction Mill		30.4	15.2	12.7	5.0			0.2	0.1	0.2	0.1	0.1	0.1
40 CFR 420.102/103(a)(2)	1,376	0.00626	0.00313	0.00261	0.00104			0.0000469	0.0000156	0.0000313	0.0000104	0.0000104	0.0000156
48" Temper Mill		17.2	8.6	7.2	2.9			0.1	0.0	0.1	0.0	0.0	0.0
40 CFR 420.102/103(a)(5)	771	0.100	0.0501	0.0417	0.0167			0.000751	0.000250	0.000501	0.000167	0.000167	0.000250
Tin Double Cold Reduction Mill		154.2	77.3	64.3	25.8			1.2	0.4	0.8	0.3	0.3	0.4
40 CFR 420.102/103(a)(2)	3,210	0.00626	0.00313	0.00261	0.00104			0.0000469	0.0000156	0.0000313	0.0000104	0.0000104	0.0000156
84" Temper		40.2	20.1	16.8	6.7			0.3	0.1	0.2	0.1	0.1	0.1

Technology Based Effluent Limitations Internal Monitoring 604

US Steel Gary Works

Effluent Limitation (lbs/day)

Guideline Process	Production (tons/day)	TSS Max	TSS Ave	Oil and Grease Max	Oil and Grease Ave	Hex. Chromium Max	Hex. Chromium Ave	Lead Max	Lead Ave	Zinc Max	Zinc Ave	Naphthalene Max	TCE Max
40 CFR 420.102/103(a)(2)	964	0.00628	0.00313	0.00261	0.00104			0.0000469	0.0000156	0.0000313	0.0000104	0.0000104	0.0000156
Hot Coil Prep Line		12.4	6.2	5.2	2.1			0.1	0.0	0.1	0.0	0.0	0.0
40 CFR 420.112(b)	864	0.102	0.0438	0.0438	0.0146								
No. 1 Electrogalvanizing Line		180.3	77.4	77.4	25.8								
40 CFR 420.112(b)	391	0.102	0.0438	0.0438	0.0146								
No. 1 Tin free Steel Line		79.8	34.3	34.3	11.4								
40 CFR 420.112(b)	1,235	0.102	0.0438	0.0438	0.0146								
No.2 Continuous Anneal Line		252.6	108.4	108.4	36.1								
40 CFR 420.112(b)	489	0.102	0.0438	0.0438	0.0146								
No.5 Electrolytic Tinning Line		99.8	42.8	42.8	14.3								
40 CFR 420.112(b)	1,109	0.102	0.0438	0.0438	0.0146								
No.6 Electrolytic Tinning Line		226.2	97.1	97.1	32.4								
40 CFR 420.112(b)	1,110	0.102	0.0438	0.0438	0.0146								
No.6 Galvanizing Line		226.4	97.2	97.2	32.4								
40 CFR 420.112(b)	811	0.102	0.0438	0.0438	0.0146								
No.7 Cleaning Line		165.4	71.0	71.0	23.7								
40 CFR 420.112(b)	341	0.102	0.0438	0.0438	0.0146								
No.8 Galvanizing Line		69.6	29.9	29.9	10.0								
40 CFR 420.122/123(a)(1)+(c)	1,110	0.175	0.0751	0.0751	0.025	0.00015	0.0000501	0.00113	0.000376	0.0015	0.0005		
No.6 Galvanizing Line		388.5	166.7	166.7	55.5	0.3	0.1	2.5	0.8	3.3	1.1		
Fume Scrubbers	1	84.0	35.9	35.9	12.0	0.011	0.004	0.081	0.027	0.108	0.036		
		84.00	35.93	35.93	12.02	0.01	0.004	0.08	0.03	0.11	0.04		
40 CFR 420.122/123(a)(1)+(c)	341	0.175	0.0751	0.0751	0.025	0.00015	0.0000501	0.00113	0.000376	0.0015	0.0005		
No.8 Galvanizing Line		119.4	51.2	51.2	17.1	0.1	0.034	0.6	0.3	1.0	0.3		
Fume Scrubbers	1	84.0	35.9	35.9	12.0	0.011	0.004	0.081	0.027	0.108	0.036		
		84.00	35.93	35.93	12.02	0.01	0.004	0.08	0.03	0.11	0.04		
BPJ													
84" HSM Basement	1.4	40.00	15.00	10.00									
		467	175	117	39								
Metal Finishing													
40 CFR 433.13/14(a)													
No.1 Electrogalvanizing Line													
No.1 Tin-Free Steel Line													
No.5 Electolytic Tinning Line													

Technology Based Effluent Limitations Internal Monitoring 604

US Steel Gary Works

Effluent Limitation (lbs/day)

Guideline Process	Production (tons/day)	TSS Max	TSS Ave	Oil and Grease Max	Oil and Grease Ave	Hex. Chromium Max	Hex. Chromium Ave	Lead Max	Lead Ave	Zinc Max	Zinc Ave	Naphthalene Max	TCE Max
No.6 Electrolytic Tinning Line													
Total Flow mgd	1.98	60	31	52	26			0.69	0.43	2.61	1.48		
		991.39	512.22	859.20	429.60			11.40	7.10	43.13	24.45		
Total		6,455	2,901	3,105	1,207	0.46	0.16	35.34	15.07	70.00	33.42	1.88	2.51

		Cadmium Max	Cadmium Ave	Chromium Max	Chromium Ave	Copper Max	Copper Ave	Nickel Max	Nickel Ave	Silver Max	Silver Ave	Total Cyanide Max	Total Cyanide Ave	TTO Max
Metal Finishing 40 CFR 433.13/14(a)														
Total Flow mgd	1.98	0.69	0.26	2.77	1.71	3.38	2.07	3.96	2.38	0.43	0.24	1.2	0.65	2.13
		11.40	4.30	45.77	28.25	55.85	34.20	65.76	39.32	7.10	3.97	19.83	10.74	35.19
Total		11.40	4.30	45.77	28.25	55.85	34.20	65.76	39.32	7.10	3.97	19.83	10.74	35.19

Technology Based Effluent Limitations

US Steel Gary Works

Internal Monitoring Station 605

Effluent Limitation (lbs/day)

Guideline Process	Production (tons/day)	TSS Max	TSS Ave	Oil and Grease Max	Oil and Grease Ave
40 CFR 420.72(c)(1)	18,432	0.427	0.16	0.107	-
84" HSM		15,741	5,898	3,944	
Total		15,741	5,898	3,944	-
Current Limits		2,175	725	1,450	

ATTACHMENT IV

REASONABLE POTENTIAL TABLES I-XII
AND
WATER QUALITY-BASED EFFLUENT LIMITATIONS
TABLE's XIII-XV
AND
ANTIDEGRADATION TABLE XVI

TABLE 1 REASONABLE POTENTIAL TO EXCEED U.S. STEEL - GARY WORKS OUTFALL 005 (43.5 mgd)

PARAMETER	MONTHLY AVERAGE					DAILY MAXIMUM					PEL		PEQ > PEL	
	Maximum Effluent Value	Count	C.V.	M.F.	PEQ	Maximum Effluent Value	Count	C.V.	M.F.	PEQ	Monthly Average@	Daily Maximum	Monthly Average	Daily Maximum
Copper (ug/l) *,!	--	--	--	--	11	3	2	0.6	3.8	11	11	21	No	No
Manganese (ug/l) #	81	40	0.8	1.1	89	180	121	1.1	0.8	140	670	1300	No	No
Mercury (ng/l) $	--	--	--	--	7.1	1.86	2	0.6	3.8	7.1	1.3	3.2	Yes	Yes
Selenium (ug/l) #	3.4	40	0.2	1.0	3.4	5.5	402	0.4	0.9	5.0	4.1	8.2	No	No
Zinc (ug/l) **	15	4	0.6	2.6	39	30	14	0.5	1.4	42	39	78	No	No
Benzene (ug/l) #,%	6.3	40	0.6	1.1	6.9	13	402	0.7	0.9	12	8.4	20	No	No
Benzo(a)pyrene (ug/l) #,%	0.704	40	1.0	1.2	0.84	2.1	402	1.6	0.8	1.7	0.093	0.23	Yes	Yes
Naphthalene (ug/l) **	1.8	2	0.6	3.8	6.8	1.8	9	0.6	1.8	3.2	21	43	No	No
Cyanide, Free (ug/l) # :														
Season I &	6.9	40	0.3	1.1	7.6	18	402	0.5	0.9	16	7.8	18	No	No
Season II &	6.9	40	0.3	1.1	7.6	18	402	0.5	0.9	16	6.0	13	Yes	Yes
Chloride (mg/l) #	62	40	0.2	1.0	62	68	121	0.2	1.0	68	66	131	No	No
Fluoride (mg/l) #	0.82	40	0.2	1.0	0.82	1.1	402	0.3	0.9	0.99	0.82	1.6	No	No
Ammonia-N (mg/l) # :														
Summer +	0.14	9	0.6	1.8	0.25	0.27	90	0.4	0.9	0.24	0.36	0.82	No	No
Winter +	0.26	31	0.4	1.1	0.29	0.49	312	0.5	0.9	0.44	0.36	0.82	No	No

* Effluent data were obtained from the July 1999 and April 2000 TMDL studies.

** Effluent data were obtained from the USS 1999 Form 2C (with additional detailed data provided by USS when needed), and the July 1999 and April 2000 TMDL studies.

$ Effluent data collected by USS in 1999 (as part of TMDL study) and 2001.

Effluent data were obtained from USS MMRs for the period January 2005 through April 2008.

& Season 1 is from April 1 through September 30, and Season 2 is from October 1 through March 31.

+ Summer months are July through September, and Winter months are October through June.

@ Monthly average PELs were calculated based on the applicable sampling frequency in a month.

% The PELs were calculated using the additivity provision in 327 IAC 5-2-11.4(a)(4)(A), as these substances are probable or known carcinogens (2.7% benzene and 97.3% benzo(a)pyrene).

! The analysis was conducted based on dissolved metal in accordance with 327 IAC 5-2-11.5(b)(1)(D). Therefore, the effluent data, PEQs and PELs are in the form of dissolved metal.

8/24/2009

TABLE 2 REASONABLE POTENTIAL TO EXCEED U.S. STEEL - GARY WORKS OUTFALL 010 (0.83 mgd)

PARAMETER	MONTHLY AVERAGE					DAILY MAXIMUM					PEL		PEQ > PEL	
	Maximum Effluent Value	Count	C.V.	M.F.	PEQ	Maximum Effluent Value	Count	C.V.	M.F.	PEQ	Monthly Average@	Daily Maximum	Monthly Average	Daily Maximum
Copper (ug/l) *,!	4.1	2	0.6	3.8	16	15	8	0.6	1.9	29	16	31	No	No
Lead (ug/l) *	0.69	2	0.6	3.8	2.6	2	8	0.6	1.9	3.8	2.6	5.3	No	No
Manganese (ug/l) #	39	40	0.5	1.1	43	71	120	0.7	0.9	64	670	1300	No	No
Mercury (ng/l) $	--	--	--	--	5.8	1.52	2	0.6	3.8	5.8	1.3	3.2	Yes	Yes
Selenium (ug/l) #	1.7	40	0.1	1.0	1.7	7.8	401	0.4	0.9	7.0	4.1	8.2	No	No
Zinc (ug/l) **	24	4	0.6	2.6	62	39	14	0.8	1.7	66	62	120	No	No
Benzene (ug/l) #,%	57	39	1.8	1.3	74	469	401	5.2	0.7	330	870	1800	No	No
Benzo(a)pyrene (ug/l) #,%	0.267	40	1.1	1.2	0.32	1.9	401	3.1	0.7	1.3	0.093	0.23	Yes	Yes
Naphthalene (ug/l) **	1.0	9	0.6	1.8	1.8	1.8	21	0.6	1.3	2.3	21	43	No	No
Cyanide, Free (ug/l) # :														
Season 1 &	11	40	0.5	1.1	12	87	401	1.5	0.8	70	8.8	18	Yes	Yes
Season 2 &	11	40	0.5	1.1	12	87	401	1.5	0.8	70	6.7	13	Yes	Yes
Chloride (mg/l) #	31	40	0.2	1.0	31	44	120	0.2	1.0	44	33	66	No	No
Fluoride (mg/l) #	0.42	40	0.6	1.1	0.46	0.51	401	0.7	0.9	0.46	0.49	0.99	No	No
Ammonia-N (mg/l) # :														
Summer +	0.40	9	0.6	1.8	0.72	2.2	90	2.3	0.8	1.8	3.8	7.7	No	No
Winter +	1.2	31	1.4	1.4	1.7	11	311	4.5	0.7	7.7	3.8	7.7	No	No

* Effluent data were obtained from the USS 6-week sampling program in 1998, and the July 1999 and April 2000 TMDL studies.

** Effluent data were obtained from the USS 1999 Form 2C (with additional detailed data provided by USS when needed), and the July 1999 and April 2000 TMDL studies.

$ Effluent data collected by USS in 1999 (as part of TMDL study) and 2001.

Effluent data were obtained from USS MMRs for the period January 2005 through April 2008.

& Season 1 is from April 1 through September 30, and Season 2 is from October 1 through March 31.

+ Summer months are July through September, and Winter months are October through June.

@ Monthly average PELs were calculated based on the applicable sampling frequency in a month.

% The PELs were calculated using the additivity provision in 327 IAC 5-2-11.4(a)(4)(A), as these substances are probable or known carcinogens (28.5% benzene and 71.5% benzo(a)pyrene).

! The analysis was conducted based on dissolved metal in accordance with 327 IAC 5-2-11.5(b)(1)(D). Therefore, the effluent data, PEQs and PELs are in the form of dissolved metal.

8/24/2009

TABLE 3 REASONABLE POTENTIAL TO EXCEED U.S. STEEL - GARY WORKS OUTFALL 005 (With the Addition of Outfall 010)

PARAMETER	Outfall 005 (43.5 mgd) Monthly Average					Outfall 005 (43.5 mgd) Daily Maximum					Outfall 010 (0.83 mgd) Monthly Average					Outfall 010 (0.83 mgd) Daily Maximum					OUTFALL 005 (44.3 mgd)					
																					PEQ		PEL		PEQ > PEL	
	Maximum Effluent Value	Count	C.V.	M.F.	PEQ	Maximum Effluent Value	Count	C.V.	M.F.	PEQ	Maximum Effluent Value	Count	C.V.	M.F.	PEQ	Maximum Effluent Value	Count	C.V.	M.F.	PEQ	Mon. Avg.	Daily Max.	Mon. Avg.@	Daily Max.	Mon. Avg.	Daily Max.
Copper (ug/l) *,!	--	--	--	--	11	3	2	0.6	3.8	11	4.1	2	0.6	3.8	16	15	8	0.6	1.9	29	11	11	11	21	No	No
Manganese (ug/l) #	81	40	0.8	1.1	89	180	121	1.1	0.8	140	39	40	0.5	1.1	43	71	120	0.7	0.9	64	88	140	670	1300	No	No
Mercury (ng/l) $	--	--	--	--	7.1	1.86	2	0.6	3.8	7.1	--	--	--	--	5.8	1.52	2	0.6	3.8	5.8	7.1	7.1	1.3	3.2	Yes	Yes
Selenium (ug/l) #	3.4	40	0.2	1.0	3.4	5.5	402	0.4	0.9	5.0	1.7	40	0.1	1.0	1.7	7.8	401	0.4	0.9	7.0	3.4	5.0	4.1	8.2	No	No
Zinc (ug/l) **	15	4	0.6	2.6	39	30	14	0.5	1.4	42	24	4	0.6	2.6	62	39	14	0.8	1.7	66	39	42	39	78	No	No
Benzene (ug/l) #,%	6.3	40	0.6	1.1	6.9	13	402	0.7	0.9	12	57	39	1.8	1.3	74	469	401	5.2	0.7	330	8.2	18	8.4	20	No	No
Benzo(a)pyrene (ug/l) #,%	0.704	40	1.0	1.2	0.84	2.1	402	1.6	0.8	1.7	0.267	40	1.1	1.2	0.32	1.9	401	3.1	0.7	1.3	0.83	1.7	0.093	0.23	Yes	Yes
Naphthalene (ug/l) **	1.8	2	0.6	3.8	6.8	1.8	9	0.6	1.8	3.2	1.0	9	0.6	1.8	1.8	1.8	21	0.6	1.3	2.3	6.7	3.2	21	43	No	No
Cyanide, Free (ug/l) # :																										
Season I &	6.9	40	0.3	1.1	7.6	18	402	0.5	0.9	16	11	40	0.5	1.1	12	87	401	1.5	0.8	70	7.7	17	7.8	18	No	No
Season II &	6.9	40	0.3	1.1	7.6	18	402	0.5	0.9	16	11	40	0.5	1.1	12	87	401	1.5	0.8	70	7.7	17	6.0	13	Yes	Yes
Chloride (mg/l) #	62	40	0.2	1.0	62	68	121	0.2	1.0	68	31	40	0.2	1.0	31	44	120	0.2	1.0	44	61	68	66	131	No	No
Fluoride (mg/l) #	0.82	40	0.2	1.0	0.82	1.1	402	0.3	0.9	0.99	0.42	40	0.6	1.1	0.46	0.51	401	0.7	0.9	0.46	0.81	0.98	0.82	1.6	No	No
Ammonia-N (mg/l) # :																										
Summer +	0.14	9	0.6	1.8	0.25	0.27	90	0.4	0.9	0.24	0.40	9	0.6	1.8	0.72	2.2	90	2.3	0.8	1.8	0.26	0.27	0.36	0.82	No	No
Winter +	0.26	31	0.4	1.1	0.29	0.49	312	0.5	0.9	0.44	1.2	31	1.4	1.4	1.7	11	311	4.5	0.7	7.7	0.32	0.58	0.36	0.82	No	No

* Effluent data were obtained from the July 1999 and April 2000 TMDL studies for Outfalls 005 and 010 and from the USS 6-week sampling program in 1998 for Outfall 010.

** Effluent data were obtained from the USS 1999 Form 2C (with additional detailed data provided by USS when needed), and the July 1999 and April 2000 TMDL studies.

$ Effluent data collected by USS in 1999 (as part of TMDL study) and 2001.

Effluent data were obtained from USS MMRs for the period January 2005 through April 2008.

& Season 1 is from April 1 through September 30, and Season 2 is from October 1 through March 31.

\+ Summer months are July through September, and Winter months are October through June.

@ Monthly average PELs were calculated based on the applicable sampling frequency in a month.

% The PELs were calculated using the additivity provision in 327 IAC 5-2-11.4(a)(4)(A), as these substances are probable or known carcinogens (2.7% benzene and 97.3% benzo(a)pyrene).

! The analysis was conducted based on dissolved metal in accordance with 327 IAC 5-2-11.5(b)(1)(D). Therefore, the effluent data, PEQs and PELs are in the form of dissolved metal.

8/24/2009

TABLE 4 REASONABLE POTENTIAL TO EXCEED U.S. STEEL - GARY WORKS OUTFALL 015 (1.7 mgd)

PARAMETER	MONTHLY AVERAGE					DAILY MAXIMUM					PEL		PEQ > PEL	
	Maximum Effluent Value	Count	C.V.	M.F.	PEQ	Maximum Effluent Value	Count	C.V.	M.F.	PEQ	Monthly Average@	Daily Maximum	Monthly Average	Daily Maximum
Copper (ug/l) *,!	1.6	2	0.6	3.8	6.1	3	8	0.6	1.9	5.7	6.1	12	No	No
Lead (ug/l) #	9.8	40	0.2	1.0	10	68	520	0.6	0.9	61	30	61	No	No
Mercury (ng/l) $	--	--	--	--	6.1	1.61	2	0.6	3.8	6.1	1.3	3.2	Yes	Yes
Zinc (ug/l) #	22	40	0.2	1.0	22	97	520	0.6	0.9	87	43	87	No	No
Chloride (mg/l) *	32	2	0.6	3.8	122	50	8	0.6	1.9	95	123	246	No	No
Ammonia-N (mg/l) # ;														
Summer +	0.068	9	0.6	1.8	0.12	0.19	276	0.5	0.9	0.17	0.49	0.99	No	No
Winter +	0.43	31	0.4	1.1	0.47	0.77	940	0.6	0.9	0.69	0.49	0.99	No	No

* Effluent data were obtained from the USS 6-week sampling program in 1998, and the July 1999 and April 2000 TMDL studies.

$ Effluent data collected by USS in 1999 (as part of TMDL study) and 2001.

Effluent data were obtained from USS MMRs for the period January 2005 through April 2008.

+ Summer months are July through September, and Winter months are October through June.

@ Monthly average PELs were calculated based on the applicable sampling frequency in a month.

! The analysis was conducted based on dissolved metal in accordance with 327 IAC 5-2-11.5(b)(1)(D). Therefore, the effluent data, PEQs and PELs are in the form of dissolved metal.

8/24/2009

TABLE 5 REASONABLE POTENTIAL TO EXCEED U.S. STEEL - GARY WORKS OUTFALL 018 (58.2 mgd)

PARAMETER	MONTHLY AVERAGE					DAILY MAXIMUM					PEL		PEQ > PEL	
	Maximum Effluent Value	Count	C.V.	M.F.	PEQ	Maximum Effluent Value	Count	C.V.	M.F.	PEQ	Monthly Average@	Daily Maximum	Monthly Average	Daily Maximum
Copper (ug/l) *,!	3.1	2	0.6	3.8	12	7	8	0.6	1.9	13	12	24	No	No
Mercury (ng/l) $	--	--	--	--	5.9	1.56	2	0.6	3.8	5.9	1.3	3.2	Yes	Yes
Zinc (ug/l) *	13	2	0.6	3.8	49	60	8	0.6	1.9	110	52	110	No	No
Ammonia-N (mg/l) # :														
Summer +	0.083	9	0.6	1.8	0.15	0.17	276	0.4	0.9	0.35	0.20	0.41	No	No
Winter +	0.13	31	0.2	1.1	0.14	0.38	940	0.4	0.9	0.34	0.20	0.41	No	No

* Effluent data were obtained from the USS 6-week sampling program in 1998, and the July 1999 and April 2000 TMDL studies.

$ Effluent data collected by USS in 1999 (as part of TMDL study) and 2001.

Effluent data were obtained from USS MMRs for the period January 2005 through April 2008.

+ Summer months are July through September, and Winter months are October through June.

@ Monthly average PELs were calculated based on the applicable sampling frequency in a month.

! The analysis was conducted based on dissolved metal in accordance with 327 IAC 5-2-11.5(b)(1)(D). Therefore, the effluent data, PEQs and PELs are in the form of dissolved metal.

8/24/2009

TABLE 6 REASONABLE POTENTIAL TO EXCEED U.S. STEEL - GARY WORKS OUTFALL 019 (49.3 mgd)

PARAMETER	MONTHLY AVERAGE					DAILY MAXIMUM					PEL		PEQ > PEL	
	Maximum Effluent Value	Count	C.V.	M.F.	PEQ	Maximum Effluent Value	Count	C.V.	M.F.	PEQ	Monthly Average@	Daily Maximum	Monthly Average	Daily Maximum
Copper (ug/l) *,!	2.4	2	0.6	3.8	9.1	17	8	0.6	1.9	32	16	32	No	No
Mercury (ng/l) $	--	--	--	--	7.3	1.91	2	0.6	3.8	7.3	1.3	3.2	Yes	Yes
Ammonia-N (mg/l) # :														
Summer +	0.094	9	0.6	1.8	0.17	0.21	276	0.4	0.9	0.19	0.29	0.57	No	No
Winter +	0.12	31	0.2	1.1	0.13	0.55	940	0.5	0.9	0.50	0.29	0.57	No	No

* Effluent data were obtained from the USS 6-week sampling program in 1998, and the July 1999 and April 2000 TMDL studies.

$ Effluent data collected by USS in 1999 (as part of TMDL study) and 2001.

Effluent data were obtained from USS MMRs for the period January 2005 through April 2008.

+ Summer months are July through September, and Winter months are October through June.

@ Monthly average PELs were calculated based on the applicable sampling frequency in a month.

! The analysis was conducted based on dissolved metal in accordance with 327 IAC 5-2-11.5(b)(1)(D). Therefore, the effluent data, PEQs and PELs are in the form of dissolved metal.

8/24/2009

TABLE 7 REASONABLE POTENTIAL TO EXCEED U.S. STEEL - GARY WORKS OUTFALL 020 (80.6 mgd)

PARAMETER	MONTHLY AVERAGE					DAILY MAXIMUM					PEL		PEQ > PEL	
	Maximum Effluent Value	Count	C.V.	M.F.	PEQ	Maximum Effluent Value	Count	C.V.	M.F.	PEQ	Monthly Average@	Daily Maximum	Monthly Average	Daily Maximum
Copper (ug/l) *,!	1.7	2	0.6	3.8	6.5	8	8	0.6	1.9	15	7.3	15	No	No
Lead (ug/l) #	6.0	40	0.04	1.0	6.0	10	174	0.09	1.0	10	6.0	12	No	No
Mercury (ng/l) $	--	--	--	--	25	6.51	2	0.6	3.8	25	1.3	3.2	Yes	Yes
Zinc (ug/l) #	40	40	0.4	1.1	44	159	174	1.0	0.8	130	62	130	No	No
Ammonia-N (mg/l) ** :														
Summer +	--	--	--	--	0.39	0.15	4	0.6	2.6	0.39	0.41	0.82	No	No
Winter +	--	--	--	--	0.29	0.24	11	0.2	1.2	0.29	0.41	0.82	No	No

* Effluent data were obtained from the USS 6-week sampling program in 1998, and the July 1999 and April 2000 TMDL studies.

** Effluent data were obtained from the USS 1999 Form 2C (with additional detailed data provided by USS when needed), and the July 1999 and April 2000 TMDL studies.

$ Effluent data collected by USS in 1999 (as part of TMDL study) and 2001.

Effluent data were obtained from USS MMRs for the period January 2005 through April 2008.

+ Summer months are July through September, and Winter months are October through June.

@ Monthly average PELs were calculated based on the applicable sampling frequency in a month.

! The analysis was conducted based on dissolved metal in accordance with 327 IAC 5-2-11.5(b)(1)(D). Therefore, the effluent data, PEQs and PELs are in the form of dissolved metal.

8/24/2009

TABLE 8 REASONABLE POTENTIAL TO EXCEED U.S. STEEL - GARY WORKS OUTFALL 600 (Combined Outfall 028 and Outfall 030)

PARAMETER	Outfall 028 (8.2 mgd) Monthly Average					Outfall 028 (8.2 mgd) Daily Maximum					Outfall 030 (20.0 mgd) Monthly Average					Outfall 030 (20.0 mgd) Daily Maximum					OUTFALL 600 (28.2 mgd)					
																					PEQ		PEL		PEQ > PEL	
	Maximum Effluent Value	Count	C.V.	M.F.	PEQ	Maximum Effluent Value	Count	C.V.	M.F.	PEQ	Maximum Effluent Value	Count	C.V.	M.F.	PEQ	Maximum Effluent Value	Count	C.V.	M.F.	PEQ	Mon. Avg.	Daily Max.	Mon. Avg.@	Daily Max.	Mon. Avg.	Daily Max.
Copper (ug/l) *,!	2.4	2	0.6	3.8	9.1	6	8	0.6	1.9	11	2.5	2	0.6	3.8	9.5	7	8	0.6	1.9	13	9.4	12	9.4	19	No	No
Lead (ug/l) #	5.6	39	0.02	1.0	5.6	17	821	0.1	1.0	17	5.2	40	0.01	1.0	5.2	8.0	868	0.04	1.0	8.0	5.3	11	5.3	11	No	No
Mercury (ng/l) $	--	--	--	--	3.3	0.88	2	0.6	3.8	3.3	--	--	--	--	3.6	0.95	2	0.6	3.8	3.6	3.5	3.5	1.3	3.2	Yes	Yes
Zinc (ug/l) #	46	39	0.4	1.1	51	90	821	0.6	0.9	81	45	40	0.4	1.1	50	142	868	0.6	0.9	128	50	110	52	110	No	No
Chloride (mg/l) *	40	2	0.6	3.8	152	70	8	0.6	1.9	133	38	2	0.6	3.8	144	49	8	0.6	1.9	93	146	105	147	296	No	No
Fluoride (mg/l) %	2.93	6	0.6	2.1	6.2	3.07	18	0.2	1.1	3.4	3.24	6	0.6	2.1	6.8	3.56	18	0.2	1.1	3.9	6.6	3.8	6.6	13	No	No
Ammonia-N (mg/l) ** :																										
Summer +	--	--	--	--	0.47	0.18	4	0.6	2.6	0.47	0.07	1	0.6	6.2	0.43	0.09	6	0.6	2.1	0.19	0.44	0.27	0.66	1.3	No	No
Winter +	--	--	--	--	0.18	0.11	11	0.5	1.6	0.18	0.21	2	0.6	3.8	0.80	0.32	17	0.9	1.7	0.54	0.62	0.44	0.66	1.3	No	No

* Effluent data were obtained from the USS 6-week sampling program in 1998, and the July 1999 and April 2000 TMDL studies.

** Effluent data were obtained from the USS 1999 Form 2C (with additional detailed data provided by USS when needed), and the July 1999 and April 2000 TMDL studies.

$ Effluent data collected by USS in 1999 (as part of TMDL study) and 2001.

Effluent data were obtained from USS MMRs for the period January 2005 through April 2008.

+ Summer months are July through September, and Winter months are October through June.

@ Monthly average PELs were calculated based on the applicable sampling frequency in a month.

% Effluent data were obtained from the USS 6-week sampling program in 1998, the July 1999 and April 2000 TMDL studies, and USS additional sampling for fluoride in 2002 and 2003.

! The analysis was conducted based on dissolved metal in accordance with 327 IAC 5-2-11.5(b)(1)(D). Therefore, the effluent data, PEQs and PELs are in the form of dissolved metal.

8/24/2009

TABLE 9 REASONABLE POTENTIAL TO EXCEED U.S. STEEL - GARY WORKS OUTFALL 034 (25.4 mgd)

PARAMETER	MONTHLY AVERAGE					DAILY MAXIMUM					PEL		PEQ > PEL	
	Maximum Effluent Value	Count	C.V.	M.F.	PEQ	Maximum Effluent Value	Count	C.V.	M.F.	PEQ	Monthly Average@	Daily Maximum	Monthly Average	Daily Maximum
Total Chromium (ug/l) #	62	40	0.8	1.1	68	398	347	2.2	0.7	280	350	790	No	No
Cadmium (ug/l) *	0.26	2	0.6	3.8	0.99	0.42	8	0.6	1.9	0.80	7.9	16	No	No
Copper (ug/l) *	7.2	4	0.6	2.6	19	12	17	0.6	1.4	17	18	41	Yes	No
Lead (ug/l) #	6.1	40	0.04	1.0	6.1	9.1	347	0.08	1.0	9.1	6.1	14	No	No
Mercury (ng/l) $	--	--	--	--	3.0	0.80	2	0.6	3.8	3.0	1.3	3.2	Yes	No
Nickel (ug/l) *	24	4	0.6	2.6	62	26	17	0.8	1.6	42	230	470	No	No
Zinc (ug/l) #	42	40	0.4	1.1	46	101	347	0.7	0.9	91	46	100	No	No
Benzo(a)pyrene (ug/l) **,%	0.05	5	0.6	2.3	0.12	0.09	18	0.5	1.3	0.12	0.30	0.72	No	No
Naphthalene (ug/l) #	0.73	40	0.3	1.1	0.80	3.2	347	0.7	0.9	2.9	67	130	No	No
Tetrachloroethylene (ug/l) #,%	5	40	0.0	1.0	5	5	346	0.0	1.0	5	5.4	13	No	No
Chloride (mg/l) *	59	2	0.6	3.8	224	83	8	0.6	1.9	158	225	452	No	No
Ammonia-N (mg/l) # :														
Summer +	0.11	9	0.6	1.8	0.20	0.40	78	1.3	0.9	0.36	0.22	0.49	No	No
Winter +	0.050	31	0.3	1.1	0.055	0.22	269	0.8	0.8	0.18	0.22	0.49	No	No

* Effluent data were obtained from the USS 6-week sampling program in 1998, the July 1999 and April 2000 TMDL studies, and USS additional sampling for copper and nickel in 2008.

** Effluent data were obtained from the USS 1999 Form 2C (with additional detailed data provided by USS when needed), and the July 1999 TMDL study.

$ Effluent data collected by USS in 1999 (as part of TMDL study) and 2001.

\# Effluent data were obtained from USS MMRs for the period January 2005 through April 2008.

\+ Summer months are July through September, and Winter months are October through June.

@ Monthly average PELs were calculated based on the applicable sampling frequency in a month.

% The PELs were calculated using the additivity provision in 327 IAC 5-2-11.4(a)(4)(A), as these substances are probable or known carcinogens (97.5% benzo(a)pyrene and 2.5% tetrachloroethylene).

8/24/2009

TABLE 10 REASONABLE POTENTIAL TO EXCEED U.S. STEEL - GARY WORKS OUTFALL 035 (156.8 mgd)

PARAMETER	MONTHLY AVERAGE					DAILY MAXIMUM					PEL		PEQ > PEL	
	Maximum Effluent Value	Count	C.V.	M.F.	PEQ	Maximum Effluent Value	Count	C.V.	M.F.	PEQ	Monthly Average@	Daily Maximum	Monthly Average	Daily Maximum
Ammonia-N (mg/l) # :														
Summer +	0.055	9	0.6	1.8	0.099	0.16	276	0.6	0.9	0.14	0.54	1.1	No	No
Winter +	0.056	31	0.2	1.1	0.062	0.15	940	0.5	0.9	0.14	0.44	0.88	No	No

Effluent data were obtained from USS MMRs for the period January 2005 through April 2008.
+ Summer months are July through September, and Winter months are October through June.
@ Monthly average PELs were calculated based on the applicable sampling frequency in a month.

8/24/2009

TABLE 11 REASONABLE POTENTIAL TO EXCEED U.S. STEEL - GARY WORKS OUTFALL 037 (3 mgd)

PARAMETER	MONTHLY AVERAGE					DAILY MAXIMUM					PEL		PEQ > PEL	
	Maximum Effluent Value	Count	C.V.	M.F.	PEQ	Maximum Effluent Value	Count	C.V.	M.F.	PEQ	Monthly Average@	Daily Maximum	Monthly Average	Daily Maximum
Zinc (ug/l) #	12	40	0.05	1.0	12	18	173	0.1	1.0	18	130	260	No	No

Effluent data were obtained from USS MMRs for the period January 2005 through April 2008.

@ Monthly average PELs were calculated based on the applicable sampling frequency in a month.

8/24/2009

TABLE 12

REASONABLE POTENTIAL TO EXCEED FOR WHOLE EFFLUENT TOXICITY
U.S. STEEL - GARY WORKS

Outfall 005*

Parameter	Maximum Effluent Value	Count	C.V.	M.F.	PEQ	WLA	PEQ>WLA	WQBEL	
								Monthly Average	Daily Maximum
Acute WET (TUa)	<1.0	13	0.0	1.0	<1.0	1.0	NO	--	Not Required
Chronic WET (TUc)	8.0	13	1.0	2.0	16	1.0	YES	1.0	--

Outfall 010*

Parameter	Maximum Effluent Value	Count	C.V.	M.F.	PEQ	WLA	PEQ>WLA	WQBEL	
								Monthly Average	Daily Maximum
Acute WET (TUa)	<1.0	18	0.0	1.0	<1.0	1.0	NO	--	Not Required
Chronic WET (TUc)	7.7	18	1.1	1.7	13	14	NO	Not Required	--

Outfall 028/030*

Parameter	Maximum Effluent Value	Count	C.V.	M.F.	PEQ	WLA	PEQ>WLA	WQBEL	
								Monthly Average	Daily Maximum
Acute WET (TUa)	<1.0	15	0.0	1.0	<1.0	1.0	NO	--	Not Required
Chronic WET (TUc)	2.0	10	0.4	1.5	3.0	3.1	NO	Not Required	--

Outfall 034*

Parameter	Maximum Effluent Value	Count	C.V.	M.F.	PEQ	WLA	PEQ>WLA	WQBEL	
								Monthly Average	Daily Maximum
Acute WET (TUa)	<1.0	10	0.0	1.0	<1.0	1.0	NO	--	Not Required
Chronic WET (TUc)	7.7	10	0.8	2.0	15	3.6	YES	3.6	--

* Data Sources:

005 - September 1999 to December 2000 data collected in accordance with the July 1999 permit modification.

010 - November 1994 to August 1996 data collected in accordance with the September 1994 permit; August 1998 to January 1999 data required by the February 1998 permit modification; and, quarterly monitoring beginning March 2008 required by the January 2008 U.S. EPA Section 308 letter.

030 - November 1994 to August 1996 data collected in accordance with the September 1994 permit and seven consecutive tests over two months required by the January 2008 U.S. EPA Section 308 letter.

034 - November 1994 to October 1996 data collected in accordance with the September 1994 permit.

8/24/2009

TABLE 13
WATER QUALITY-BASED EFFLUENT LIMITATIONS
FOR U.S. STEEL - GARY WORKS

Parameter	Quantity or Loading			Quality or Concentration		
	Monthly Average	Daily Maximum	Units	Monthly Average @	Daily Maximum	Units
Outfall 005 (60.4 mgd)						
Mercury	0.00066	0.0016	lbs/day	1.3	3.2	ng/l
Selenium	2.1	4.1	lbs/day	4.1	8.2	ug/l
Benzene %	4.2	10	lbs/day	8.4	20	ug/l
Benzo(a)pyrene %	0.047	0.12	lbs/day	0.093	0.23	ug/l
Naphthalene	11	22	lbs/day	21	43	ug/l
Ammonia (as N)			lbs/day			
Summer +	307	706	lbs/day	610	1400	ug/l
Winter +	302	655	lbs/day	600	1300	ug/l
Total Residual Chlorine	4.0	9.1	lbs/day	8	18	ug/l
Free Cyanide						
Season 1 &	3.9	9.1	lbs/day	7.8	18	ug/l
Season 2 &	3.0	6.6	lbs/day	6.0	13	ug/l
Whole Effluent Toxicity (WET)				1.0		TUc
Outfall 010 (0.83 mgd)						
Mercury	0.0000090	0.000022	lbs/day	1.3	3.2	ng/l
Benzo(a)pyrene #	0.00064	0.0016	lbs/day	0.093	0.23	ug/l
Total Residual Chlorine	0.055	0.12	lbs/day	8	18	ug/l
Free Cyanide						
Season 1 &	0.061	0.12	lbs/day	8.8	18	ug/l
Season 2 &	0.046	0.090	lbs/day	6.7	13	ug/l
Outfall 005 (61.2 mgd) (with the addition of 010)						
Mercury	0.00066	0.0016	lbs/day	1.3	3.2	ng/l
Selenium	2.1	4.2	lbs/day	4.1	8.2	ug/l
Benzene %	4.3	10	lbs/day	8.4	20	ug/l
Benzo(a)pyrene %	0.047	0.12	lbs/day	0.093	0.23	ug/l
Naphthalene	11	22	lbs/day	21	43	ug/l
Total Ammonia (as N)			lbs/day			
Summer +	312	715	lbs/day	610	1400	ug/l
Winter +	306	664	lbs/day	600	1300	ug/l
Total Residual Chlorine	4.1	9.2	lbs/day	8	18	ug/l
Free Cyanide						
Season 1 &	4.0	9.2	lbs/day	7.8	18	ug/l
Season 2 &	3.1	6.6	lbs/day	6.0	13	ug/l
Whole Effluent Toxicity (WET)				1.0		TUc

@ Monthly average WQBELs were calculated based on the applicable sampling frequency in a month, except for WET.

\+ Summer months are July through September, and Winter months are October through June.

& Season 1 is from April 1 through September 30, and Season 2 is from October 1 through March 31.

% The WQBELs were calculated using the additivity provision in 327 IAC 5-2-11.4(a)(4)(A), as these substances are probable or known carcinogens (2.7% benzene and 97.3% benzo(a)pyrene).

\# The WQBELs were calculated using the additivity provision in 327 IAC 5-2-11.4(a)(4)(A), as this substance and benzo(a)pyrene, which is present in the discharge, but not limited, are probable or known carcinogens (28.5% benzene and 71.5% benzo(a)pyrene).

8/24/2009

TABLE 14
WATER QUALITY-BASED EFFLUENT LIMITATIONS
FOR U.S. STEEL - GARY WORKS

Parameter	Quantity or Loading Monthly Average	Daily Maximum	Units	Quality or Concentration Monthly Average @	Daily Maximum	Units
Outfall 015 (1.7 mgd)						
Mercury	0.000018	0.000045	lbs/day	1.3	3.2	ng/l
Total Residual Chlorine	0.11	0.26	lbs/day	8	18	ug/l
Outfall 018 (58.2 mgd)						
Mercury	0.00063	0.0016	lbs/day	1.3	3.2	ng/l
Total Residual Chlorine	3.9	8.7	lbs/day	8	18	ug/l
Outfall 019 (49.3 mgd)						
Mercury	0.00053	0.0013	lbs/day	1.3	3.2	ng/l
Total Residual Chlorine	3.3	7.4	lbs/day	8	18	ug/l
Outfall 020 (80.6 mgd)						
Mercury	0.00087	0.0022	lbs/day	1.3	3.2	ng/l
Total Residual Chlorine	5.4	12	lbs/day	8	18	ug/l
Outfall 021 (0.6 mgd)						
Total Residual Chlorine	0.040	0.090	lbs/day	8	18	ug/l
Outfall 028/030 (28.2 mgd)						
Lead	6.1	12	lbs/day	26	52	ug/l
Mercury	0.00031	0.00075	lbs/day	1.3	3.2	ng/l
Zinc	42	82	lbs/day	180	350	ug/l
Total Residual Chlorine	1.9	4.2	lbs/day	8	18	ug/l
Outfall 032 (0.3 mgd)						
Total Residual Chlorine	0.020	0.045	lbs/day	8	18	ug/l
Outfall 033 (0.2 mgd)						
Total Residual Chlorine	0.013	0.030	lbs/day	8	18	ug/l

@ Monthly average WQBELs were calculated based on the applicable sampling frequency in a month.

8/24/2009

TABLE 15
WATER QUALITY-BASED EFFLUENT LIMITATIONS
FOR U.S. STEEL - GARY WORKS

Parameter	Quantity or Loading			Quality or Concentration		
	Monthly Average	Daily Maximum	Units	Monthly Average @	Daily Maximum	Units
Outfall 034 (25.4 mgd)						
Cadmium	2.3	3.4	lbs/day	11	16	ug/l
Chromium (VI)	3.0	6.8	lbs/day	14	32	ug/l
Total Chromium	74	168	lbs/day	350	790	ug/l
Copper	3.8	8.7	lbs/day	18	41	ug/l
Lead	5.9	14	lbs/day	28	64	ug/l
Mercury	0.00028	0.00068	lbs/day	1.3	3.2	ng/l
Nickel	59	100	lbs/day	280	470	ug/l
Silver	0.042	0.072	lbs/day	0.20	0.34	ug/l
Zinc	34	74	lbs/day	160	350	ug/l
Naphthalene	14	28	lbs/day	67	130	ug/l
Tetrachloroethylene %	1.1	2.8	lbs/day	5.4	13	ug/l
Total Residual Chlorine	1.7	3.8	lbs/day	8	18	ug/l
Whole Effluent Toxicity (WET)				3.6	--	TUc
Outfall 035 (156.8 mgd)						
Total Residual Chlorine	10	24	lbs/day	8	18	ug/l
Outfall 037 (3 mgd)						
Total Residual Chlorine	0.20	0.45	lbs/day	8	18	ug/l
Outfall 039 (55 mgd)						
Total Residual Chlorine	3.7	8.3	lbs/day	8	18	ug/l
Outfall 041A & 041B (0.086 mgd)						
Total Residual Chlorine	0.0057	0.013	lbs/day	8	18	ug/l

@ Monthly average WQBELs were calculated based on the applicable sampling frequency in a month, except for WET.

% The WQBELs were calculated using the additivity provision in 327 IAC 5-2-11.4(a)(4)(A), as this substance and benzo(a)pyrene, which is present in the discharge, but not limited, are probable or known carcinogens (97.5% benzo(a)pyrene and 2.5% tetrachloroethylene).

8/24/2009

TABLE 16 - 1
ANTIDEGRADATION
FOR U.S. STEEL - GARY WORKS

Parameter	Existing Permit Limits				Proposed Permit Limits				New or Increased Permit Limit for a Non-BCC or New or Increased Loading of a BCC? (a)			
	Loading (lbs/day)		Concentration (ug/l)		Loading (lbs/day)		Concentration (ug/l)		Loading (lbs/day)		Concentration (ug/l)	
	Monthly Average	Daily Maximum	Monthly Average	Daily Maximum	Monthly Average	Daily Maximum	Monthly Average	Daily Maximum	Monthly Average	Daily Maximum	Monthly Average	Daily Maximum
Outfall 005 (60.4 mgd)												
Oil and Grease	--	--	--	Report	--	--	Report	Report				
Selenium	Report	Report	Report	Report	2.1	4.1	4.1	8.2	New (1)	New (1)	New (1)	No
Benzene	Report	Report	Report	Report	Report	Report	Report	Report				
Benzo(a)pyrene	Report	Report	Report	Report	0.047	0.12	0.093	0.23	New (1)	New (1)	New (1)	No
Phenols (4AAP)	Report	Report	Report	Report	--	--	--	--				
Ammonia (as N)	Report	Report	Report	Report	Report	Report	Report	Report				
Total Cyanide	Report	Report	Report	Report	--	--	--	--				
Free Cyanide												
Season 1	Report	Report	Report	Report	3.8	9.1	7.6	18	Increased (1)	Increased (1)	No	No
Season 2	Report	Report	Report	Report	3.0	6.6	6.0	13	No	No	No	No
Mercury	--	--	--	--	0.00066	0.0016	0.0013	0.0032	New (2)	New (2)	New (2)	New (2)
Total Residual Chlorine	--	--	10	20	4.0	9.1	8	18	New (1)	New (1)	No	No
Fluoride	Report	Report	Report	Report	Report	Report	Report	Report				
Chloride	Report	Report	Report	Report	Report	Report	Report	Report				
Sulfate	Report	Report	Report	Report	Report	Report	Report	Report				
Nitrite	Report	Report	Report	Report	--	--	--	--				
Nitrate	Report	Report	Report	Report	--	--	--	--				
Arsenic	Report	Report	Report	Report	--	--	--	--				
Iron	Report	Report	Report	Report	--	--	--	--				
Magnesium	Report	Report	Report	Report	--	--	--	--				
Manganese	Report	Report	Report	Report	--	--	--	--				
Lead	Report	Report	Report	Report	--	--	--	--				
Zinc	Report	Report	Report	Report	--	--	--	--				
Outfall 010 (0.83 mgd)												
Oil and Grease	--	--	--	Report	--	--	Report	Report				
Selenium	Report	Report	Report	Report	--	--	--	--				
Benzene	Report	Report	Report	Report	Report	Report	Report	Report				
Benzo(a)pyrene	Report	Report	Report	Report	0.00064	0.0016	0.093	0.23	New (1)	New (1)	New (1)	No
Phenols (4AAP)	Report	Report	Report	Report	--	--	--	--				
Ammonia (as N)	Report	Report	Report	Report	Report	Report	Report	Report				
Total Cyanide	Report	Report	Report	Report	--	--	--	--				
Free Cyanide												
Season 1	Report	Report	Report	Report	0.053	0.12	7.6	18	Increased (1)	Increased (1)	No	No
Season 2	Report	Report	Report	Report	0.046	0.090	6.7	13	No	No	No	No
Mercury	--	--	--	--	0.0000090	0.000022	0.0013	0.0032	New (2)	New (2)	New (2)	New (2)
Total Residual Chlorine	--	--	10	20	0.055	0.12	8	18	New (1)	New (1)	No	No
Fluoride	Report	Report	Report	Report	--	--	--	--				
Chloride	Report	Report	Report	Report	Report	Report	Report	Report				
Sulfate	Report	Report	Report	Report	Report	Report	Report	Report				
Nitrite	Report	Report	Report	Report	--	--	--	--				
Nitrate	Report	Report	Report	Report	--	--	--	--				
Arsenic	Report	Report	Report	Report	--	--	--	--				
Iron	Report	Report	Report	Report	--	--	--	--				
Magnesium	Report	Report	Report	Report	--	--	--	--				
Manganese	Report	Report	Report	Report	--	--	--	--				
Lead	Report	Report	Report	Report	--	--	--	--				
Zinc	Report	Report	Report	Report	--	--	--	--				
Side Table A (a) **Current Outfall 200 (Combined 005 and 010)**	Existing Permit Limits				Combination of Proposed 005 and 010				New or Increased Permit Limit for a Non-BCC or New or Increased Loading of a BCC?			
Selenium	Report	Report	Report	45.0	2.1	4.2	4.1	8.2	New	New	New	No
Benzene	30.0	68.0	65.0	150.0	Report	Report	Report	Report				
Benzo(a)pyrene	Report	Report	Report	1.0	0.048	0.12	0.093	0.23	New	New	New	No
Phenols (4AAP)	6.0	14.0	Report	Report	--	--	--	--				
Ammonia (as N)												
Summer	330	770	720	1,700	Report	Report	Report	Report				
Winter	550	1,300	1,200	2,800	Report	Report	Report	Report				
Free Cyanide												
Season 1	3.5	8.2	7.6	18.0	3.9	9.2	7.6	18	Increased	Increased	No	No
Season 2	3.5	8.2	7.6	18.0	3.0	6.7	6.0	13	No	No	No	No
Mercury	--	--	--	--	0.00067	0.0016	0.0013	0.0032	New	New	New	New
Fluoride	Report	Report	Report	2,700	Report	Report	Report	Report				

8/24/2009

TABLE 16 - 2
ANTIDEGRADATION
FOR U.S. STEEL - GARY WORKS

Parameter	Existing Permit Limits				Proposed Permit Limits				New or Increased Permit Limit for a Non-BCC or New or Increased Loading of a BCC? (b)			
	Loading (lbs/day)		Concentration (ug/l)		Loading (lbs/day)		Concentration (ug/l)		Loading (lbs/day)		Concentration (ug/l)	
	Monthly Average	Daily Maximum	Monthly Average	Daily Maximum	Monthly Average	Daily Maximum	Monthly Average	Daily Maximum	Monthly Average	Daily Maximum	Monthly Average	Daily Maximum
Outfall 005 (including 010) (61.2 mgd)												
Oil and Grease	--	--	Report	Report	--	--	Report	Report				
Selenium	2.1	4.1	4.1	8.2	2.1	4.2	4.1	8.2	No	Increased (3)	No	No
Benzene	Report	Report	Report	Report	Report	Report	Report	Report				
Benzo(a)pyrene	0.047	0.12	0.093	0.23	0.047	0.12	0.093	0.23	No	No	No	No
Ammonia (as N)	Report	Report	Report	Report	Report	Report	Report	Report				
Free Cyanide												
Season 1	3.8	9.1	7.6	18	3.9	9.2	7.6	18	No	No	No	No
Season 2	3.0	6.6	6.0	13	3.1	6.6	6.0	13	Increased (3)	No	No	No
Mercury	0.00066	0.0016	0.0013	0.0032	0.00066	0.0016	0.0013	0.0032	No	No	No	No
Total Residual Chlorine	4.0	9.1	8	18	4.1	9.2	8	18	No	No	No	No
Fluoride	Report	Report	Report	Report	Report	Report	Report	Report				
Chloride	Report	Report	Report	Report	Report	Report	Report	Report				
Sulfate	Report	Report	Report	Report	Report	Report	Report	Report				
Internal Outfall 501												
Total Suspended Solids	1,135	2,184	Report	Report	706	1,359	Report	Report	No	No		
Oil and Grease	--	81.0	--	Report	Report	50.4	Report	Report		No		
Selenium	Report	Report	Report	Report	Report	Report	Report	Report				
Benzene	--	0.41	--	Report	Report	0.25	Report	Report		No		
Benzo(a)pyrene	Report	0.41	Report	Report	0.08	0.15	Report	Report	New (4)	No		
Naphthalene	--	0.41	--	Report	0.09	0.15	Report	Report	New (4)	No		
Phenols (4AAP)	0.41	0.81	Report	Report	0.25	0.50	Report	Report	No	No		
Ammonia (as N)	203.0	690.0	Report	Report	27.9	40.4	Report	Report	No	No		
Total Cyanide	44.6	81.0	Report	Report	27.7	41.0	Report	Report	No	No		
Free Cyanide	Report	Report	Report	Report	Report	Report	Report	Report				
Total Iron	Report	Report	Report	Report	--	--	--	--				
Dissolved Iron	Report	Report	Report	Report	--	--	--	--				
Side Table B (b) Outfall 005 Comparison	Combination of Outfalls 005 and 010 Prior to Redirection of Outfall 010				Outfall 005 (including 010)				New or Increased Permit Limit for a Non-BCC or New or Increased Loading of a BCC?			
Oil and Grease	--	Report	--	--	Report	Report	--	--				
Selenium	2.1	4.1	4.1	8.2	2.1	4.2	4.1	8.2	No	Increased	No	No
Benzene	Report	Report	Report	Report	Report	Report	Report	Report				
Benzo(a)pyrene	0.048	0.12	0.093	0.23	0.047	0.12	0.093	0.23	No	No	No	No
Ammonia (as N)					Report	Report	Report	Report				
Free Cyanide												
Season 1	3.9	9.2	7.6	18	3.9	9.2	7.6	18	No	No	No	No
Season 2	3.0	6.7	6.0	13	3.1	6.6	6.0	13	Increased	No	No	No
Mercury	0.00067	0.0016	0.0013	0.0032	0.00066	0.0016	0.0013	0.0032	No	No	No	No
Total Residual Chlorine	4.1	9.2	8	18	4.1	9.2	8	18	No	No	No	No
Fluoride	Report	Report	Report	Report	Report	Report	Report	Report				
Chloride	Report	Report	Report	Report	Report	Report	Report	Report				
Sulfate	Report	Report	Report	Report	Report	Report	Report	Report				

8/24/2009

TABLE 16 - 3
ANTIDEGRADATION
FOR U.S. STEEL - GARY WORKS

Parameter	Existing Permit Limits				Proposed Permit Limits				New or Increased Permit Limit for a Non-BCC or New or Increased Loading of a BCC?			
	Loading (lbs/day)		Concentration (ug/l)		Loading (lbs/day)		Concentration (ug/l)		Loading (lbs/day)		Concentration (ug/l)	
	Monthly Average	Daily Maximum	Monthly Average	Daily Maximum	Monthly Average	Daily Maximum	Monthly Average	Daily Maximum	Monthly Average	Daily Maximum	Monthly Average	Daily Maximum
Outfall 015 (1.7 mgd)												
Total Suspended Solids	Report	Report	Report	Report	Report	Report	Report	Report				
Oil and Grease	--	--	--	Report	--	--	Report	Report				
Ammonia (as N)	Report	Report	Report	Report	Report	Report	Report	Report				
CBOD5	--	--	--	--	Report	Report	Report	Report				
Total Cyanide	Report	Report	Report	Report	--	--	--	--				
Free Cyanide	--	--	--	--	Report	Report	Report	Report				
Phenols (4AAP)	Report	Report	Report	Report	Report	Report	Report	Report				
Lead	Report	Report	Report	Report	Report	Report	Report	Report				
Zinc	Report	Report	Report	Report	Report	Report	Report	Report				
Total Residual Chlorine	--	--	10	20	0.11	0.26	8	18	New (1)	New (1)	No	No
Mercury	--	--	--	--	0.000018	0.000045	0.0013	0.0032	New (2)	New (2)	New (2)	New (2)
Internal Outfall 607												
Total Suspended Solids	Report	Report	30000.0	60000.0	Report	Report	30000.0	60000.0			No	No
Oil and Grease	Report	Report	10000.0	15000.0	--	--	10000.0	15000.0			No	No
Ammonia (as N)	Report	Report	Report	Report	Report	Report	Report	Report				
CBOD5	--	--	--	--	Report	Report	Report	Report				
Total Cyanide	Report	Report	Report	Report	--	--	--	--				
Free Cyanide	--	--	--	--	Report	Report	Report	Report				
Phenols (4AAP)	Report	Report	Report	Report	Report	Report	Report	Report				
Lead	Report	Report	Report	Report	Report	Report	Report	Report				
Zinc	Report	Report	Report	Report	Report	Report	Report	Report				
Benzo(a)pyrene	Report	Report	Report	Report	Report	Report	Report	Report				
Outfall 018 (58.2 mgd)												
Oil and Grease	--	--	--	Report	--	--	Report	Report				
Ammonia (as N)	Report	Report	Report	Report	Report	Report	Report	Report				
Total Cyanide	--	Report	--	Report	--	--	--	--				
Free Cyanide	--	--	--	--	--	Report	--	Report				
Phenols (4AAP)	Report	Report	Report	Report	Report	Report	Report	Report				
Copper	--	--	--	--	Report	Report	Report	Report				
Mercury	--	--	--	--	0.00063	0.0016	0.0013	0.0032	New (2)	New (2)	New (2)	New (2)
Total Residual Chlorine	--	--	10	20	3.9	8.7	8	18	New (1)	New (1)	No	No
Outfall 019 (49.3 mgd)												
Oil and Grease	--	--	--	Report	--	--	Report	Report				
Total Cyanide	--	Report	--	Report	--	--	--	--				
Free Cyanide	--	--	--	--	--	Report	--	Report				
Mercury	--	--	--	--	0.00053	0.0013	0.0013	0.0032	New (2)	New (2)	New (2)	New (2)
Ammonia (as N)	Report	Report	Report	Report	Report	Report	Report	Report				
Phenols (4AAP)	Report	Report	Report	Report	Report	Report	Report	Report				
Total Residual Chlorine	--	--	10	20	3.3	7.4	8	18	New (1)	New (1)	No	No
Outfall 020 (80.6 mgd)												
Oil and Grease	--	--	--	Report	--	--	Report	Report				
Lead	Report	Report	Report	Report	Report	Report	Report	Report				
Zinc	Report	Report	Report	Report	Report	Report	Report	Report				
Mercury	--	--	--	--	0.00087	0.0022	0.0013	0.0032	New (2)	New (2)	New (2)	New (2)
Ammonia (as N)	--	--	--	--	Report	Report	Report	Report				
Total Residual Chlorine	--	--	10	20	5.4	12	8	18	New (1)	New (1)	No	No

8/24/2009

TABLE 16 - 4
ANTIDEGRADATION
FOR U.S. STEEL - GARY WORKS

Parameter	Existing Permit Limits				Proposed Permit Limits				New or Increased Permit Limit for a Non-BCC or New or Increased Loading of a BCC?			
	Loading (lbs/day)		Concentration (ug/l)		Loading (lbs/day)		Concentration (ug/l)		Loading (lbs/day)		Concentration (ug/l)	
	Monthly Average	Daily Maximum	Monthly Average	Daily Maximum	Monthly Average	Daily Maximum	Monthly Average	Daily Maximum	Monthly Average	Daily Maximum	Monthly Average	Daily Maximum
Outfall 021 (0.6 mgd)												
Oil and Grease	--	--	--	Report	--	--	--	Report				
Total Residual Chlorine	--	--	10	20	0.040	0.090	8	18	New (1)	New (1)	No	No
Ammonia (as N)	--	--	--	--	Report	Report	Report	Report				
Outfall 023 (0.1 mgd)												
Oil and Grease	--	--	--	Report	--	--	--	Report				
Total Residual Chlorine	--	--	10	20	--	--	--	--				
Ammonia (as N)	--	--	--	--	Report	Report	Report	Report				
Outfall 028/030 (28.2 mgd)												
Total Suspended Solids	2,093	6,086	Report	Report	2,038	5,933	Report	Report	No	No		
Oil and Grease	1,302	2,467	Report	Report	1,274	2,807	Report	Report	No	No (c)		
Lead	6.34	14.73	Report	Report	6.1	12	26	52	No	No	New (1)	New (1)
Zinc	Report	Report	Report	Report	Report	Report	Report	Report				
Mercury	--	--	--	--	0.00031	0.00075	0.0013	0.0032	New (2)	New (2)	New (2)	New (2)
Ammonia (as N)	--	--	--	--	Report	Report	Report	Report				
Fluoride	--	--	--	--	Report	Report	Report	Report				
Total Residual Chlorine	--	--	10	20	1.9	4.2	8	18	New (1)	New (1)	No	No
Internal Outfall 603												
Lead	7.92	24.23	Report	Report	Report	Report	Report	Report				
Zinc	11.88	36.38	Report	Report	11.88	36.38	Report	Report	No	No		
Outfall 032 (0.3 mgd)												
Oil and Grease	--	--	--	Report	--	--	--	Report				
Total Residual Chlorine	--	--	10	20	0.020	0.045	8	18	New (1)	New (1)	No	No
Ammonia (as N)	--	--	--	--	Report	Report	Report	Report				
Outfall 033 (0.2 mgd)												
Oil and Grease	--	--	--	Report	--	--	--	Report				
Phenols (4AAP)	--	Report	--	Report	--	Report	--	Report				
Ammonia (as N)	--	--	--	--	Report	Report	Report	Report				
Total Residual Chlorine	--	--	10	20	0.013	0.030	8	18	New (1)	New (1)	No	No

8/24/2009

TABLE 16 - 5
ANTIDEGRADATION
FOR U.S. STEEL - GARY WORKS

Parameter	Existing Permit Limits				Proposed Permit Limits				New or Increased Permit Limit for a Non-BCC or New or Increased Loading of a BCC?			
	Loading (lbs/day)		Concentration (ug/l)		Loading (lbs/day)		Concentration (ug/l)		Loading (lbs/day)		Concentration (ug/l)	
	Monthly Average	Daily Maximum	Monthly Average	Daily Maximum	Monthly Average	Daily Maximum	Monthly Average	Daily Maximum	Monthly Average	Daily Maximum	Monthly Average	Daily Maximum
Outfall 034 (25.4 mgd)												
CBOD5												
Summer	1,334	2,669	Report	Report	1,334	2,669	Report	Report	No	No		
Winter	4,537	9,074	Report	Report	4,537	9,074	Report	Report	No	No		
Oil and Grease	1,500	4,000	Report	Report	1,430	3,660	Report	Report	No	No		
Total Suspended Solids	--	--	--	--	Report	Report	Report	Report				
Ammonia (as N)	Report	Report	Report	Report	Report	Report	Report	Report				
Lead	2.52	5.85	Report	Report	2.52	5.85	Report	Report	No	No		
Zinc	34.98	74.68	Report	Report	Report	Report	Report	Report				
Copper	--	--	--	--	3.8	8.7	18	41	New (5,6)	New (5,6)	New (5,6)	New (5,6)
Cadmium	--	--	--	--	2.3	3.4	11	16	New (6)	New (6)	New (6)	New (6)
Nickel	--	--	--	--	Report	Report	Report	Report				
Silver	--	--	--	--	0.042	0.072	0.20	0.34	New (6)	New (6)	New (6)	New (6)
Total Chromium	29.77	50.31	Report	Report	Report	Report	Report	Report				
Mercury	--	--	--	--	0.00028	0.00068	0.0013	0.0032	New (2)	New (2)	New (2)	New (2)
Phenols (4AAP)	26.00	39.00	Report	Report	26.00	39.00	Report	Report	No	No		
Total Residual Chlorine	2.44	4.9	10	20	1.7	3.8	8	18	No	No	No	No
Dissolved Oxygen			Daily minimum of 5.0 mg/l				Daily minimum of 5.0 mg/l				No	
Naphthalene	--	2.02	--	Report	--	--	--	--				
Tetrachloroethylene	--	3.03	--	Report	--	--	--	--				
Internal Outfall 604												
Total Suspended Solids	3,353	7,474	Report	Report	2,901	6,455	Report	Report	No	No		
Oil and Grease	Report	Report	Report	Report	Report	Report	Report	Report				
Total Chromium	Report	Report	Report	Report	28.25	45.77	Report	Report	No (d)	No (d)		
Zinc	Report	Report	Report	Report	33.42	70.00	Report	Report	No (d)	No (d)		
Lead	Report	Report	Report	Report	15.07	35.34	Report	Report	New (7)	New (7)		
Total Cyanide	--	--	--	--	10.74	19.83	Report	Report	New (8)	New (8)		
Cadmium	--	--	--	--	Report	Report	Report	Report				
Hexavalent Chromium	--	--	--	--	0.15	0.46	Report	Report	New (7)	New (7)		
Copper	--	--	--	--	Report	Report	Report	Report				
Nickel	--	--	--	--	39.32	65.76	Report	Report	New (8)	New (8)		
Silver	--	--	--	--	Report	Report	Report	Report				
TTO	--	--	--	--	--	35.19	--	--		New (8)		
Naphthalene	Report	Report	Report	Report	--	1.68	--	Report		No (d)		
Tetrachloroethylene	Report	Report	Report	Report	--	2.51	--	Report		No (d)		
Internal Outfall 605												
Total Suspended Solids	725	2,175	Report	Report	725	2,175	Report	Report	No	No		
Oil and Grease	--	1,450	--	Report	Report	1,450	--	Report		No		
Internal Outfall 606												
Oil and Grease	--	--	--	Report	--	--	--	Report				
Total Chromium	--	--	--	Report	--	--	--	Report				
Zinc	--	--	--	Report	--	--	--	Report				
Lead	--	--	--	Report	--	--	--	Report				
Phenols (4AAP)	--	--	--	Report	--	--	--	Report				
Outfall 035 (156.8 mgd)												
Oil and Grease	--	--	--	Report	--	--	--	Report				
Ammonia (as N)												
Summer	200	400	Report	Report	--	--	--	--				
Winter	350	700	Report	Report	--	--	--	--				
Total Residual Chlorine	--	--	10	20	10	24	8	18	New (9)	New (9)	No	No

8/24/2009

TABLE 16 - 6
ANTIDEGRADATION
FOR U.S. STEEL - GARY WORKS

Parameter	Existing Permit Limits				Proposed Permit Limits				New or Increased Permit Limit for a Non-BCC or New or Increased Loading of a BCC?			
	Loading (lbs/day)		Concentration (ug/l)		Loading (lbs/day)		Concentration (ug/l)		Loading (lbs/day)		Concentration (ug/l)	
	Monthly Average	Daily Maximum	Monthly Average	Daily Maximum	Monthly Average	Daily Maximum	Monthly Average	Daily Maximum	Monthly Average	Daily Maximum	Monthly Average	Daily Maximum
Outfall 037 (3 mgd)												
Oil and Grease	--	--	--	Report	--	--	--	Report				
Zinc	--	Report	--	Report	--	Report	--	Report				
Phenols (4AAP)	--	Report	--	Report	--	Report	--	Report				
Total Residual Chlorine	--	--	10	20	0.20	0.45	8	18	New (9)	New (9)	No	No
Outfall 039 (55 mgd)												
Oil and Grease	--	--	--	Report	--	--	--	Report				
Total Residual Chlorine	--	--	10	20	3.7	8.3	8	18	New (9)	New (9)	No	No
Outfall 041A & 041B (0.086 mgd)												
Oil and Grease	--	--	--	--	--	--	Report	Report				
Total Residual Chlorine	--	--	10	20	0.0057	0.013	8	18	New (9)	New (9)	No	No
Zinc	--	--	--	--	Report	Report	Report	Report				

Footnotes:

New or Increased Permit Limit?

(a) For those parameters that are limited in the current permit at Outfall 200, the determination of whether there is a new or increased permit limit was made by combining the proposed limits for Outfalls 005 and 010 and comparing them to the existing limits at Outfall 200. This comparison is included in Side Table A.

(b) The determination of whether there is an increased limit was made by comparing the proposed limits for Outfall 005 (including Outfall 010) to the combined limits for Outfalls 005 and 010 prior to the redirection of Outfall 010. This comparison is included in Side Table B. There are no proposed limits for selenium at Outfall 010, but selenium is present in the discharge. However, as a conservative test of antidegradation, the combined limits for Outfalls 005 and 010 prior to redirection of Outfall 010 were set equal to the limits for selenium at Outfall 005.

(c) An Oil and Grease Bubble applies to Outfalls 028/030 and 034. The daily maximum mass limit at Outfall 028/030 was increased and the daily maximum mass limit at Outfall 034 was equally decreased so there is not an overall increase in the daily maximum mass limits. Since there is no overall increase in Oil and Grease to the same stretch of the Grand Calumt River, there is no lowering of water quality and antidegradation under 327 IAC 5-2-11.3(a) is satisfied.

(d) The technology-based effluent limits were applied at the final outfall in the current permit. These limits are being applied at the internal outfall in the proposed permit. The limits at the internal outfall are more stringent than the comparable limits at the final outfall in the current permit so there is not an increased permit limit.

Significant Lowering of Water Quality?

(1) The current permit has a mass or concentration limit for this parameter that is equal to or less stringent than a WQBEL in the proposed permit. The existing effluent flow was used to calculate the WQBELs for the proposed permit so the new limit will not result in a calculated concentration increase outside of the mixing zone under 327 IAC 5-2-11.3(b)(1)(B)(i) and antidegradation under 327 IAC 5-2-11.3(b) is satisfied. Since the new limit does not cause a significant lowering under 327 IAC 5-2-11.3(b)(1)(B), it does not cause a significant lowering in the OSRW in accordance with Non-Rule Policy Document Water-002-NPD.

(2) The new limits for mercury fall under the antidegradation exemption in 327 IAC 5-2-11.3(b)(1)(C)(ii) so they do not cause a significant lowering of water quality and antidegradation under 327 IAC 5-2-11.3(b) is satisfied. This exemption also applies to 327 IAC 5-2-11.7(a)(2) so the new limits do not cause a significant lowering of water quality in the OSRW.

(3) The concentration limits will not change after the redirection of Outfall 010 to Outfall 005. Therefore, the increased mass limit is a result of the increase in flow and will not result in a calculated concentration increase outside of the mixing zone under 327 IAC 5-2-11.3(b)(1)(B)(i) and antidegradation under 327 IAC 5-2-11.3(b) is satisfied. Since the new limit does not cause a significant lowering under 327 IAC 5-2-11.3(b)(1)(B), it does not cause a significant lowering in the OSRW in accordance with Non-Rule Policy Document Water-002-NPD.

(4) The new monthly average limit and more stringent daily maximum limit are based on revised Federal Effluent Limitations Guidelines. The new monthly average limit will not result in a calculated concentration increase outside of the mixing zone under 327 IAC 5-2-11.3(b)(1)(B)(i) so antidegradation under 327 IAC 5-2-11.3(b) is satisfied. Since the new limit does not cause a significant lowering under 327 IAC 5-2-11.3(b)(1)(B), it does not cause a significant lowering in the OSRW in accordance with Non-Rule Policy Document Water-002-NPD.

(5) The new limits for copper are based on a reasonable potential analysis using effluent monitoring data. The new limits fall under the antidegradation exemption in 327 IAC 5-2-11.3(b)(1)(C)(ii) so they do not cause a significant lowering of water quality and antidegradation under 327 IAC 5-2-11.3(b) is satisfied. This exemption also applies to 327 IAC 5-2-11.7(a)(2) so the new limits do not cause a significant lowering of water quality in the OSRW.

(6) New WQBELs are required as a result of the new application of TBELs at Internal Outfall 604. The mass-based WQBELs are more stringent than the TBELs so they do not allow an increase above the TBELs. The new TBELs fall under the antidegradation exemption in 327 IAC 5-2-11.3(b)(1)(C)(ii) so they do not cause a significant lowering and antidegradation under 327 IAC 5-2-11.3(b) is satisfied. This exemption also applies to 327 IAC 5-2-11.7(a)(2) so the new limits do not cause a significant lowering of water quality in the OSRW. Since the WQBELs at Outfall 034 are more stringent than the TBELs at Internal Outfall 604, a report only requirement is included at internal Outfall 604 instead of actual TBELs.

(7) New TBELs for hexavalent chromium and lead are being applied to the internal outfall in the proposed permit. The TBELs for lead are in addition to the more stringent limits at the final outfall. The TBELs were authorized under the current permit, but were not applied. The new TBELs for hexavalent chromium are equivalent to and the new TBELs for lead are more stringent than those that were authorized, but not applied in the current permit. The new TBELs fall under the antidegradation exemption in 327 IAC 5-2-11.3(b)(1)(C)(ii) so they do not cause a significant lowering of water quality and antidegradation under 327 IAC 5-2-11.3(b) is satisfied. This exemption also applies to 327 IAC 5-2-11.7(a)(2) so the new limits do not cause a significant lowering of water quality in the OSRW.

(8) New TBELs for this parameter are being applied in the proposed permit. The TBELs were authorized under the current permit, but were not applied. The same flow was used to calculate the TBELs for the proposed permit as would have been used in the current permit, so the new limits do not allow an increase above what was authorized, but not applied in the current permit. The new TBELs fall under the antidegradation exemption in 327 IAC 5-2-11.3(b)(1)(C)(ii) so they do not cause a significant lowering of water quality and antidegradation under 327 IAC 5-2-11.3(b) is satisfied. This exemption also applies to 327 IAC 5-2-11.7(a)(2) so the new limits do not cause a significant lowering of water quality in the OSRW.

(9) The current permit has concentration limits for this parameter that are less stringent than the concentration-based WQBELs in the proposed permit. The existing effluent flow determined under 327 IAC 5-2-11.4(a)(9) was used to calculate the WQBELs for the proposed permit. The new mass limits are more stringent than those that would be calculated for the current permit under 327 IAC 5-2-11.7(a)(1)(B). Therefore, the new mass limits are not considered an increased discharge under 327 IAC 5-2-11.7(a)(1)(B) and antidegradation is satisfied.

ATTACHEMENT V

SITE-SPECIFIC CRITERIA FOR FREE CYANIDE

Site-specific Criteria for Cyanide

US Steel has proposed to calculate site-specific criteria for cyanide using the Recalculation Procedure. Species not found to occur at the site will be eliminated from the cyanide toxicity dataset and the site-specific criteria calculated using the remaining species. The presence of salmonids in the East Branch of the Grand Calumet River (EBGCR) has been the focus of agency attention. Simon et al. (1999) documents the presence of chinook salmon in the Grand Calumet River (GCR) during the fall spawning run known to occur in October and November. Steelhead trout were also collected in this study and may be present in the GCR from October until March. IDEM is therefore proposing 'salmonids present' and 'salmonids absent' site-specific criteria to be applied during the year when salmonids are either present or absent. Since salmonids are not known to spawn in the EBGCR IDEM is proposing to use only the adult salmonid toxicity test results for calculating the 'salmonids present' cyanide criteria.

Calculation of 'Adult Salmonids Present' Site-specific Criteria for Cyanide:

Recalculated Cyanide Water Quality Criteria:

Final Acute Value (FAV) = 70.00 µg/L[1]
Criterion Maximum Concentration (CMC) = **35 µg/L**
Criterion Continuous Concentration (CCC) = **8.2 µg/L**

Acute-Chronic Ratio	8.568
No. of Genera Used	14
No. of Genera Deleted	2
No. of New Genera Added	0

[1]FAV value lowered to protect adult Rainbow trout from calculated FAV = 96.53.

TABLE 1

Recalculation of Site-Specific WQC for Cyanide (CN) (Adult Salmonids Present)

Genus	GMAV (µg/L)	Rank	Cum. Prob. P (Rank/n+1)	Sq.Rt. (P)	ln (GMAV)	ln (GMAV)^2
Tanytarsus	2,490	14				
Asellus	2,326	13				
Physa	432	12				
Pteronarcys	426	11				
Carassius	318	10				
Gammarus	167	9				
***Salvelinus*/Adult**	**156**	8				

Pimephales	125.1	7				
Daphnia	123.6	6				
Micropterus	102.0	5				
Pomoxis	102.0	4	0.2667	0.0711	4.6250	21.3906
Lepomis	99.28	3	0.2000	0.0400	4.5979	21.1407
Perca	92.64	2	0.1333	0.0178	4.5287	20.5091
Oncorhynchus	**70.00**	1	0.0667	0.0044	4.2485	18.0498
(Adult)						
			0.6667	0.1333	18.0001	81.0902

T = 4
$\sum$ ln (GMAV) = 18.0001
$\sum$ ln $(GMAV)^2$ = 81.0902
$\sum$ P = 0.6667
$\sum$ Sq. Rt. (P) = 0.1333
S = 0.3672
L = 4.4878
A = 4.5699

FAV = 96.5344 µg/L, lowered to 70 µg/L to protect adult Rainbow trout

Acute-Chronic Ratio = 8.568

Recalculated WQC For CN:

Final Acute Value (FAV)	= e^A (4.5699)/*	= 70 µg/L
Acute Aquatic Criterion (CMC)	= FAV/2	= 35 µg/L
Chronic Aquatic Criterion (CCC)	= FAV / A-C Ratio (8.568)	= 8.2 µg/L

The following genera were omitted from the Great Lakes Water Quality Guidance cyanide criteria dataset:

	GMAV	Sensitivity Rank
Poecilia	147.0	10
Salmo	90.0	3

Site-Specific Cyanide WQC Calculations Details:

$$S^2 = \frac{\Sigma\{(\ln GMAV)^2\} - \Sigma\{(\ln GMAV)\}^2 / T}{\Sigma(P) - \Sigma\{(\sqrt{P})\}^2 / T}$$

$$S^2 = \frac{\Sigma\{(\ln 81.0902)^2\} - \Sigma\{(\ln 18.0001)\}^2 / 4}{\Sigma(0.6667) - \Sigma\{(\sqrt{0.1333})\}^2 / 4}$$

$$= \frac{81.0902 - 81.0009}{0.6667 - 0.0044}$$

$$= \frac{0.0893}{0.6623} = \sqrt{0.1348}; \qquad \mathbf{S = 0.3672}$$

$$L = \{\Sigma(\ln GMAV) - S(\Sigma(\sqrt{P})\} / T$$

$$\mathbf{L} = \{(18.0001) - 0.3672 \times 0.1333\} / 4$$
$$= \{18.0001 - 0.0489\} / 4$$
$$= 17.9512 / 4$$
$$= \mathbf{4.4878}$$

$$A = S\sqrt{(0.05)} + L$$

$$\mathbf{A} = 0.3672 \times 0.2236 + 4.4878$$
$$= 0.0821 + 4.4878$$
$$= \mathbf{4.5699}$$

$$\mathbf{FAV} = e^{A}$$
$$= e^{(4.5699)} = \mathbf{96.5344\ (70\ ug/L)}\ /^{*}$$

Calculation of 'Salmonids Absent' Site-specific Criteria for Cyanide:

Recalculated Cyanide Water Quality Criteria:

Final Acute Value (FAV) = 91.62 µg/L
Criterion Maximum Concentration (CMC) = 46 µg/L
Criterion Continuous Concentration (CCC) = 10.7 µg/L

The following genera were omitted from the EPA National database to Recalculate the Site-Specific WQC for Cyanide:

	GMAV	Sensitivity Rank
o *Salmo*	63.45	1
o *Salvelinus*	85.80	2
o *Poecilia*	147.00	9

TABLE 2 -

Recalculation of Site-Specific WQC for Cyanide (CN)

Genus	GMAV (ug/L)	Rank	Cum. Prob. P (Rank/n+1)	Sq.Rt. (P)	ln (GMAV)	ln (GMAV)^2
Tanytarsus	2,490	12				
Asellus	2,326	11				
Physa	432	10				
Pteronarcys	426	9				
Carassius	318	8				
Gammarus	167	7				
Pimephales	125.1	6				
Daphnia	123.6	5				
Micropterus	102.0	4	0.3077	0.5547	4.625021	21.3906
Pomoxis	102.0	3	0.2308	0.4804	4.625021	21.3906
Lepomis	99.28	2	0.1538	0.3922	4.597921	21.1407
Perca	92.64	1	0.0769	0.2773	4.528720	20.5091
			0.7692	1.7046	18.3766	84.4310

T = 4
Σ ln (GMAV) = 18.3766
Σ ln (GMAV)^2 = 84.4310
Σ P = 0.7692
Σ Sq. Rt. (P) = 1.7046

S = 0.3775
L = 4.4333
A = 4.5177

A-C Ratio = 8.57 (Except for the resistant Isopod (*Asellus*)), derived from all Freshwater organisms)

Recalculated WQC For CN:

Final Acute Value (FAV)	$= e^{A}$ (4.5177)	= 91.62 ug/L
Acute Aquatic Criterion (AAC)	= FAV/2	= 45.81 ug/L
Chronic Aquatic Criterion (CAC)	= FAV / A-C Ratio (8.57)	= 10.69 ug/L

WQC Calculations Details:

$$S^2 = \frac{\Sigma\{(\ln GMAV)^2\} - \Sigma\{(\ln GMAV)\}^2/T}{\Sigma(P) - \Sigma\{(\sqrt{P})\}^2/T}$$

$$S^2 = \frac{\Sigma\{(\ln 84.4310)^2\} - \Sigma\{(\ln 18.3766)\}^2/4}{\Sigma(0.7692) - \Sigma\{(\sqrt{1.7046})\}^2/4}$$

$$= \frac{84.4310 - 84.4249}{0.7692 - 0.7264}$$

$$= \frac{0.0061}{0.0428} = \sqrt{0.1425}; \qquad S = 0.3775$$

$$L = \{E(\ln GMAV) - S(E(\sqrt{P})\}/T$$

$$L = \{(18.3766) - 0.3775 \times 1.7046\}/4$$
$$= \{18.3766 - 0.6435\}/4$$
$$= 17.7331/4$$
$$= 4.4333$$

$$A = S\sqrt{(0.05)} + L$$

$$A = 0.3775 \times 0.2236 + 0.4333$$
$$= 0.0844 + 0.4333$$
$$= \mathbf{4.5177}$$

$$\mathbf{FAV} = e^{A}$$
$$= e(4.5177) = \mathbf{91.62}$$

Literature Cited:

Simon, T.P., P.M. Stewart, D. Sparks, A. Peine, J. Exl, J.T. Butcher and J. Smith 1999. A study of the distribution of chinook salmon (*Onchorhynchus tschawytscha*) in the Grand Calumet River and Indiana Harbor Canal, Lake County, Indiana. U.S. Fish and Wildlife Service, Bloomington, Indiana.

ATTACHMENT VI

TREATMENT SYSTEM LINE DRAWINGS

COKE PLANT TREATMENT SYSTEM

LEACHATE WASTEWATER TREATMENT SYSTEM

OUTFALLS 603, 028, AND 030 WASTEWATER TREATMENT SYSTEM

CHROME TREATMENT/CHROME REDUCTION AND TERMINAL TREATMENT PLANT

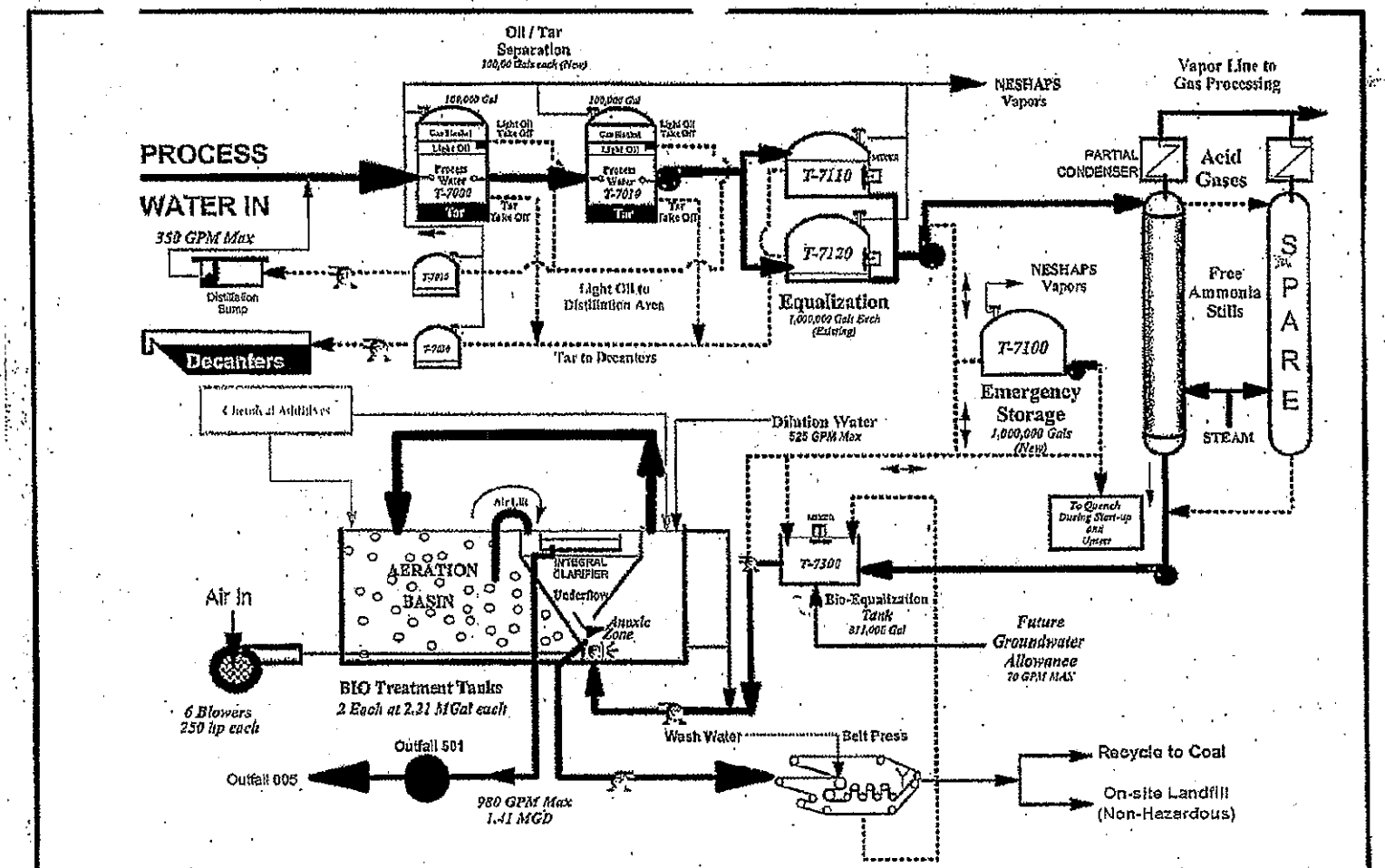

Prepared For:

U.S. STEEL
GARY WORKS
IND005444062

Prepared By:

THE ADVENT GROUP, INC.
ROSSLYN, VIRGINIA

ATTACHMENT IIB-1.
COKEMAKING & BY-PRODUCT RECOVERY TREATMENT SYSTEM

98521\schematics. 23-Feb-99

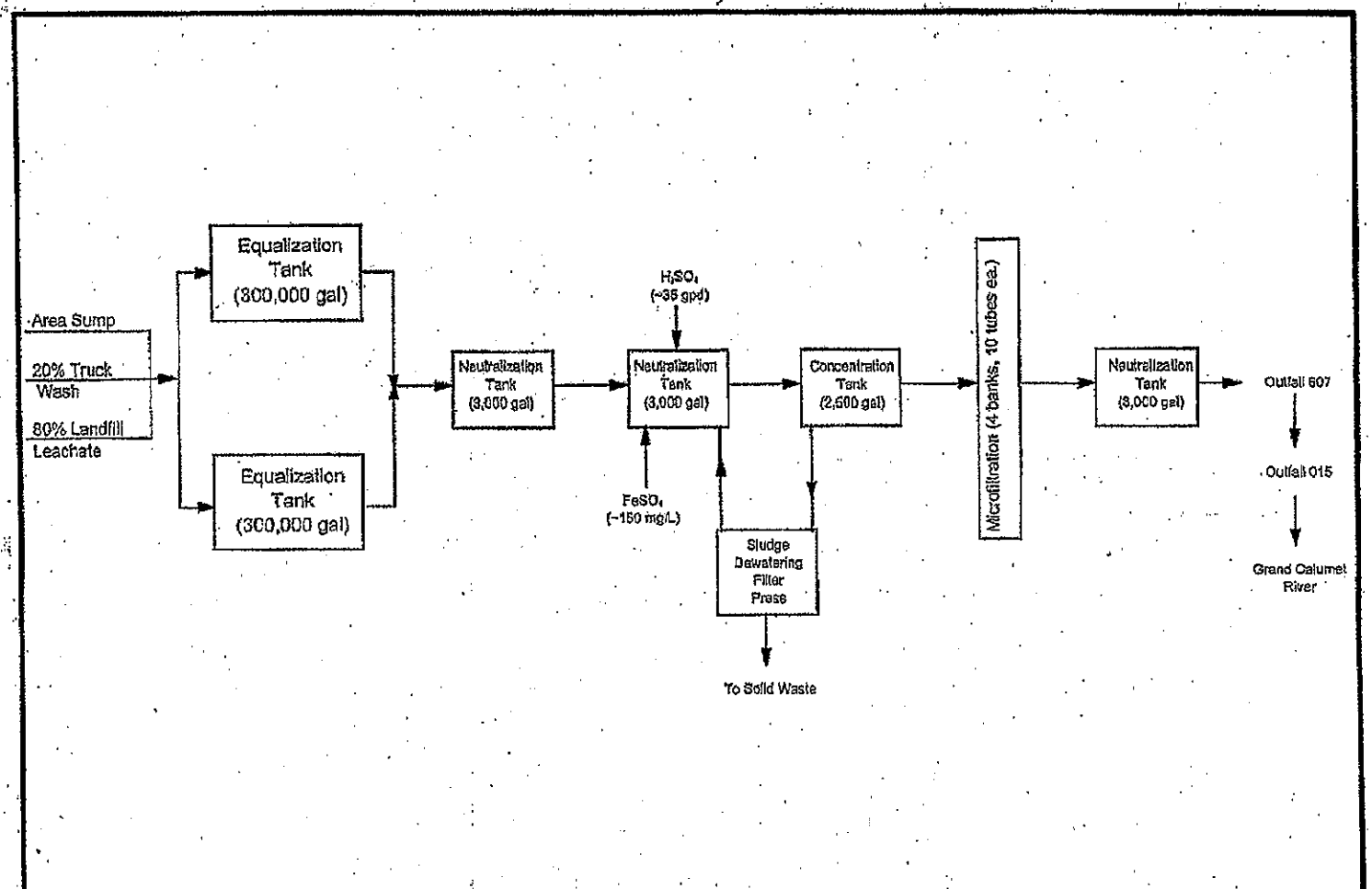

Prepared For:

U.S. STEEL
GARY WORKS
IND005444062

Prepared By:

THE ADVENT GROUP, INC.
ROSSLYN, VIRGINIA

ATTACHMENT IIB-2. SWD-1
LEACHATE WASTEWATER TREATMENT SYSTEM

98521\schematics. 23-Feb-99

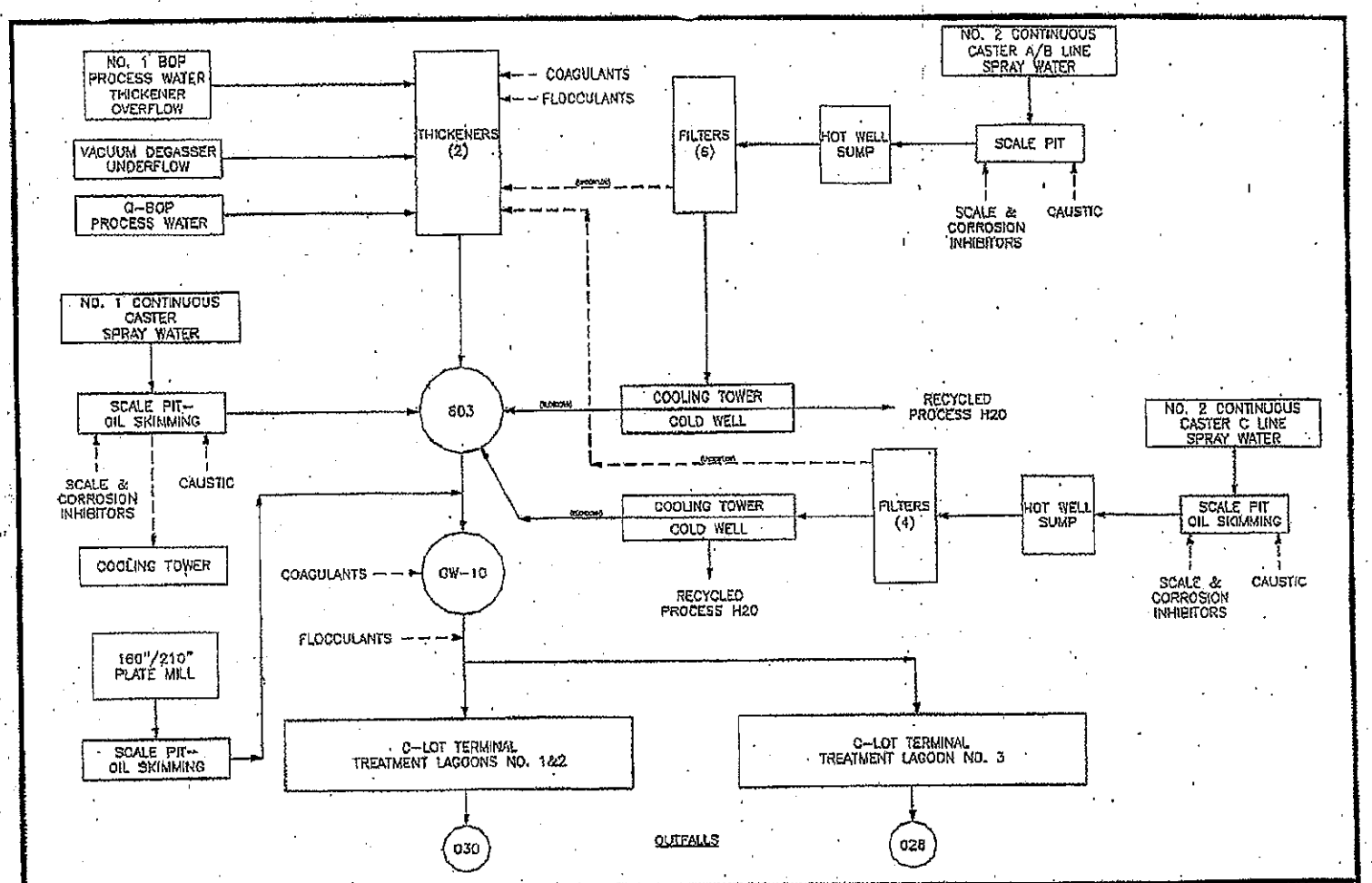

Prepared For:

U.S. STEEL
GARY WORKS
IND005444062

Prepared By:

THE ADVENT GROUP, INC.
ROSSLYN, VIRGINIA

ATTACHMENT IIB-3a.
OUTFALLS 603, 028, AND 030
WASTEWATER TREATMENT SYSTEM

98521\schematics. 23-Feb-98

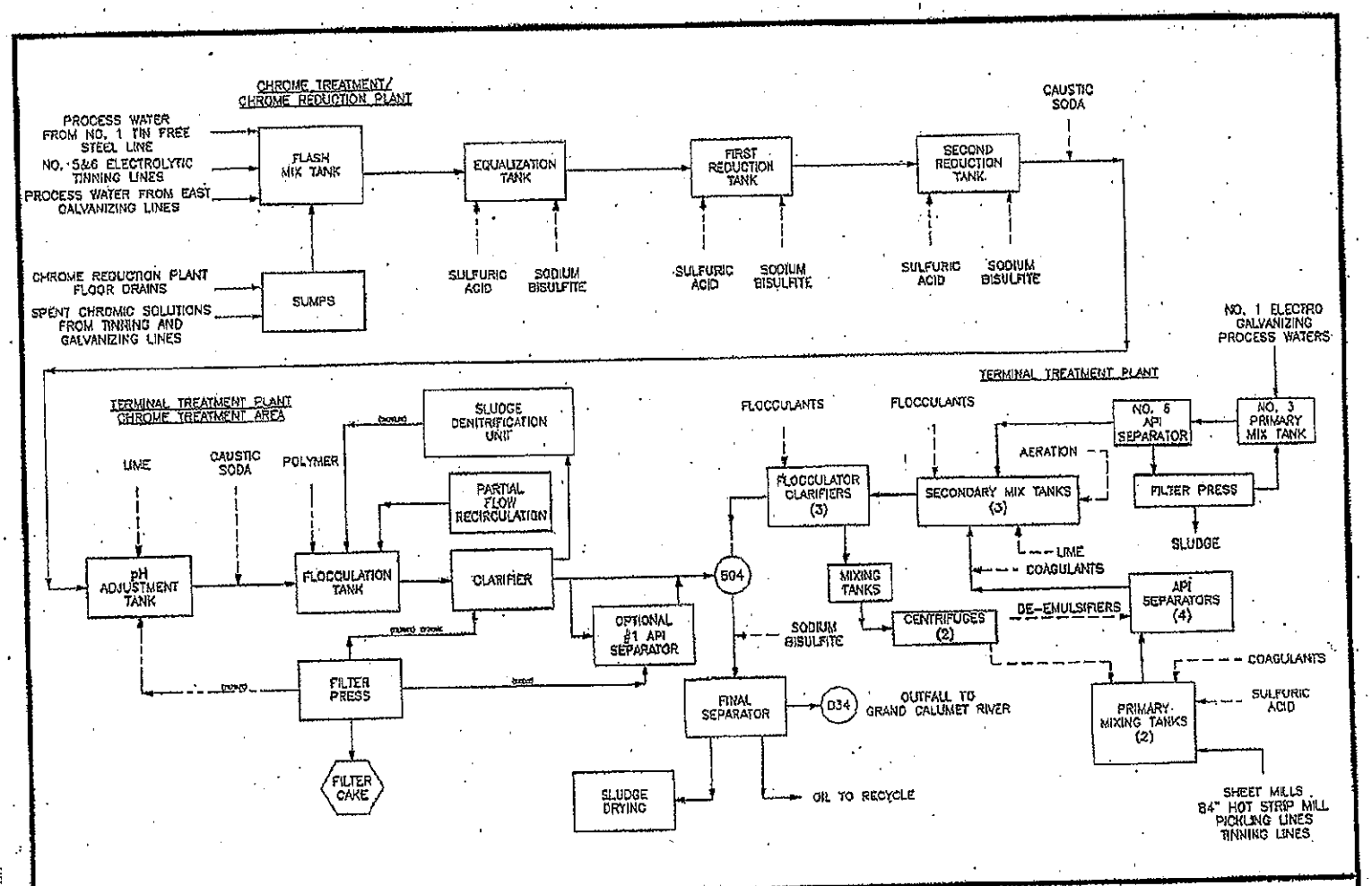

Prepared For:

U.S. STEEL
GARY WORKS
IND005444062

Prepared By:

THE ADVENT GROUP, INC.
ROSSLYN, VIRGINIA

ATTACHMENT IIB-4b. CHROME TREATMENT/CHROME REDUCTION AND TERMINAL TREATMENT PLANT - OUTFALL 604

98521\schematics.

23-Feb-99

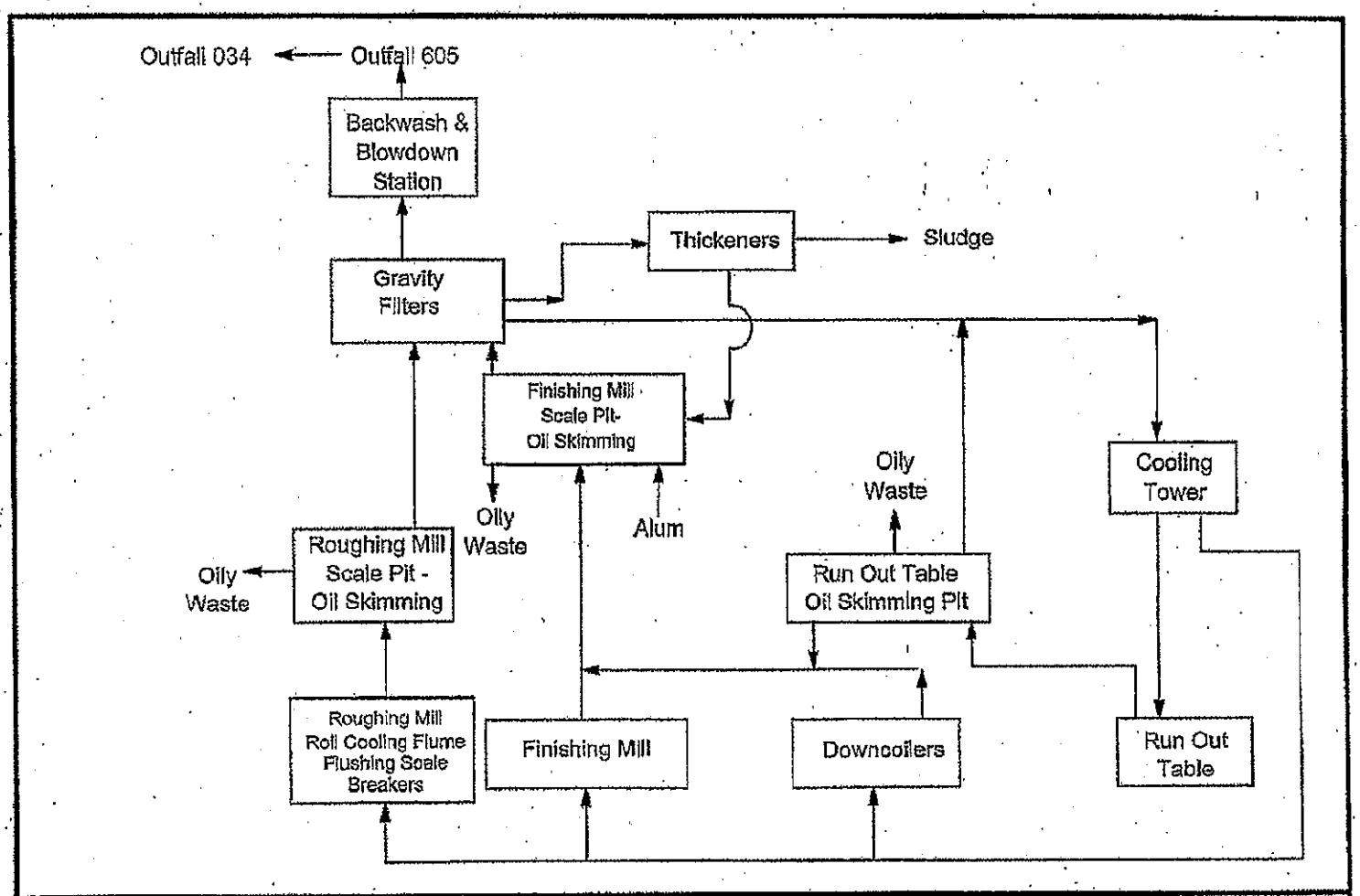

Prepared For:

U.S. STEEL
GARY WORKS
IND005444062

Prepared By:

THE ADVENT GROUP, INC.
ROSSLYN, VIRGINIA.

ATTACHMENT IIB-4a.
84" HOT STRIP MILL
WASTEWATER TREATMENT

98521\schematics. 23-Feb-99