**National Pollutant Discharge Elimination System**
**Briefing Memo for**
INDIANA GASIFICATION, LLC
August 2012

# Indiana Department of Environmental Management

100 North Senate Avenue
Indianapolis, Indiana 46204
(317) 232-8603
Toll Free (800) 451-6027
www.idem.IN.gov

| | |
|---|---|
| **Permittee:** | Indiana Gasification, LLC<br>P.O. Box 55934<br>Indianapolis, IN 46205 |
| **Existing Permit Information:** | This is a New NPDES Permit |
| **Source Contact:** | Mark Lubbers<br>(317)490-5078 |
| **Source Location:** | County Road 200 N and Base Road<br>Rockport, Indiana<br>Spencer County |
| **Receiving Stream:** | Ohio River;<br>Strassell Ditch;<br>Unnamed Tributary to Huffman Ditch; and<br>Two Unnamed Ditches |
| **Proposed Action:** | New Permit: IN0063851<br><br>Date Application Received: 4/20/11 |
| **Source Category** | NPDES Minor – Industrial |
| **Permit Writer:** | Richard Hamblin<br>(317)232-8696 or rhamblin@idem.in.gov |

## Table of Contents

**1.0 Introduction** ..... **3**
**2.0 Facility description** ..... **3**
2.1 General ..... 3
2.2 Outfall Locations ..... 5
2.3 Wastewater Treatment ..... 5
2.4 Changes in Operation ..... 6
2.5 Facility Storm Water ..... 7
**3.0 Permit History** ..... **9**
**4.0 Receiving Water** ..... **9**
4.1 Receiving Stream Water Quality ..... 9
**5.0 Permit limitations** ..... **9**
5.1 Technology-Based Effluent Limits ..... 10
5.2 Water Quality-Based Effluent Limits ..... 11
5.3 Whole Effluent Toxicity ..... 13
5.4 Antibacksliding ..... 13
5.5 Antidegradation ..... 13
5.6 Stormwater ..... 14
5.7 Water Treatment Additives ..... 15
**6.0 Permit Draft Discussion** ..... **16**
6.1 Discharge Limitations ..... 16
6.2 Monitoring Conditions and Rationale ..... 17
6.3 Schedule of Compliance ..... 18
6.4 Special Conditions ..... 18
6.5 Spill Response and Reporting Requirement ..... 19
6.6 Post Public Notice Addendum ..... 20

# 1.0 INTRODUCTION

The Indiana Department of Environmental Management (IDEM) received a National Pollutant Discharge Elimination System (NPDES) Permit application from URS Corporation, on behalf of Indiana Gasification, on April 20, 2011. A five year permit is proposed in accordance with 327 IAC 5-2-6(a).

The Federal Water Pollution Control Act of 1972 and subsequent amendments require a NPDES permit for the discharge of wastewater to surface waters. Furthermore, Indiana Statute 13-15-1-2 requires a permit to control or limit the discharge of any contaminants into state waters or into a publicly owned treatment works. This proposed permit action by IDEM complies with both federal and state requirements.

In accordance with Title 40 of the Code of Federal Regulations (CFR) Sections 124.7 and 124.6, as well as Indiana Administrative Code (IAC) 327 Section 5, development of a Statement of Basis, or Briefing Memo, is required for NPDES permits. This document fulfills the requirements established in those regulations.

This Briefing Memo was prepared in order to document the factors considered in the development of NPDES Permit effluent limitations. The technical basis for the Briefing Memo may consist of evaluations of promulgated effluent guidelines, existing effluent quality, receiving water conditions, and wasteload allocations to meet Indiana Water Quality Standards. Decisions to award variances to Water Quality Standards or promulgated effluent guidelines are justified in the Briefing Memo where necessary.

# 2.0 FACILITY DESCRIPTION

## 2.1 General

Indiana Gasification, LLC is classified under Standard Industrial Classification (SIC) Code 4925 – Gas Production and/or Distribution and SIC Code 2819 – Industrial Inorganic Chemicals, Not Elsewhere Classified. The facility is a coal and petroleum coke gasification plant in Rockport, Indiana. The facility will use a quench gasification process to produce substitute natural gas (SNG) and liquefied carbon dioxide ($CO_2$). Upon completion, the facility expects to annually produce 48 billion cubic feet of SNG and 4.9 million tons of liquefied $CO_2$.

Gasification is the process by which a solid fuel source, water, and oxygen are subjected to high temperatures and pressures to create a 'syngas'. The syngas can be cleaned to create SNG and $CO_2$. The $CO_2$ is removed and will be sold to third parties for use in enhanced oil recovery operations. The SNG will be sold as a replacement to regional natural gas.

A map showing the location of the facility has been included as Figure 1.

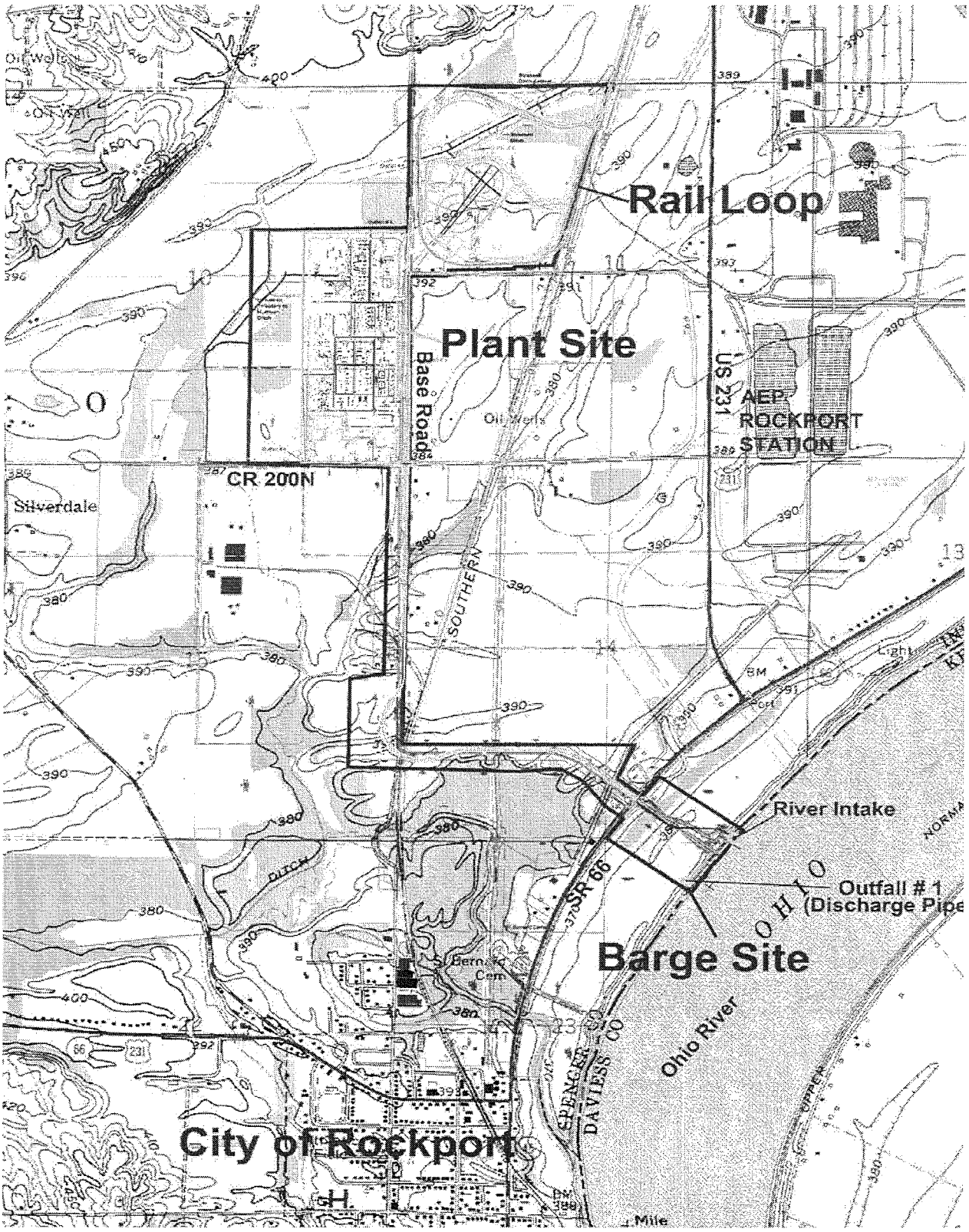


**Figure 1: Facility Location**

Spencer County

## 2.2 Outfall Locations

| | |
|---|---|
| OUTFALL 001 to Ohio River | Latitude: 37° 53' 60"<br>Longitude: -87° 02' 30" |
| OUTFALL 002 to roadside ditch on East side of facility | Latitude: 37° 54' 58"<br>Longitude: -87° 03' 17" |
| OUTFALL 003 to roadside ditch on East side of facility | Latitude: 37° 55' 11"<br>Longitude: -87° 03' 17" |
| OUTFALL 004 to unnamed tributary to Strassel Ditch | Latitude: 37° 55' 40"<br>Longitude: -87° 03' 12" |
| OUTFALL 005 to Strassel Ditch | Latitude: 37° 55' 40"<br>Longitude: -87° 03' 15" |
| OUTFALL 006 to unnamed tributary to Huffman Ditch | Latitude: 37° 55' 30"<br>Longitude: -87° 03' 16" |
| OUTFALL 007 to unnamed tributary to Huffman Ditch | Latitude: 37° 55' 23"<br>Longitude: -87° 03' 39" |
| OUTFALL 008 to roadside ditch on Southwest corner of facility | Latitude: 37° 54' 58"<br>Longitude: -87° 03' 32" |

## 2.3 Wastewater Treatment

Raw water is provided from an intake structure on the Ohio River. The raw river water is then treated by clarification and stored as service water. The service water is treated by reverse osmosis (RO), softeners, and clarifiers to a quality suitable for cooling water make-up, service water, and fire water. The facility plans to discharge non-contact cooling water, boiler blowdown, RO reject water, water softener regenerant, plant and equipment drains, and storm water. Process wastewater will be collected and treated in a zero liquid discharge (ZLD) system with no resultant effluent.

Non-contact cooling water and boiler blowdown are treated by chlorine residual removal and are expected to have an average discharge of 2.13 MGD. RO reject water and softener regenerant may be neutralized, if needed, prior to being discharged via Outfall 001. During such discharge periods, the RO and softener wastewater flow are expected to be approximately 0.36 MGD. Wastewater from equipment drains that contribute to the discharge at Outfall 001 are treated in an oil/water separator and could discharge approximately 0.04 MGD.

A Flow Diagram has been included as Figure 2. Flows given in Figure 2 are gallons per minute (gpm).

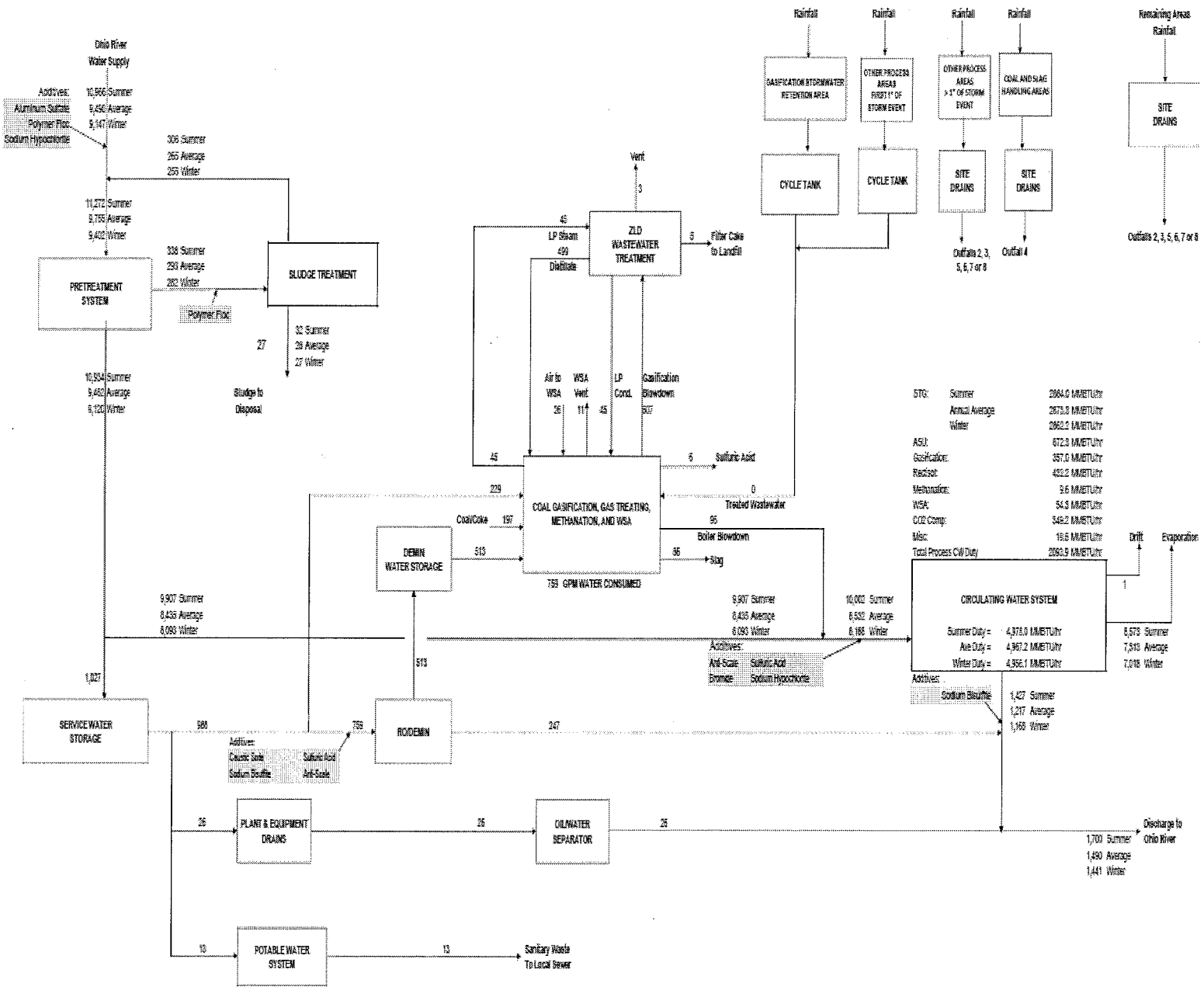


**Figure 2: Flow Diagram**

The permittee shall have the wastewater treatment facilities under the responsible charge of an operator certified by the Commissioner in a classification corresponding to the classification of the wastewater treatment plant as required by IC 13-18-11-11 and 327 IAC 5-22-5. In order to operate a wastewater treatment plant the operator shall have qualifications as established in 327 IAC 5-22-7. IDEM has given the permittee a Class A-SO industrial wastewater treatment plant classification.

## 2.4 Changes in Operation

This is a new NPDES permit.

## 2.5 Facility Storm Water

Storm water is collected and discharged at all outfalls except Outfall 001. Outfalls 002 through 008 are storm water only. Please refer to Section 5.6 of this Briefing Memo for more information regarding storm water requirements.

Outfalls 002 and 003 discharge to a county road side ditch on east side of the facility. Outfall 004 discharges to an unnamed tributary to Strassell Ditch. Outfall 005 discharges to Strassell Ditch. Outfalls 006 and 007 discharge to an unnamed tributary to Huffman Ditch. Outfall 008 discharges to another county road side ditch on the southwest corner of the facility.

Illinois Basin coal and petcoke will be brought to the facility by rail and truck and on barges via a loading facility on the Ohio River near the US 231 Bridge. Both coal and petcoke will be transferred into the facility by a covered conveyor system. During operation, coal and petcoke will be stored on an approximately 176 acre parcel prior to use in the production process. This parcel will also include a storage area for the washed, vitrified slag byproduct. The coal/petcoke will be moved to production by covered conveyors.

Indiana Gasification has designed a storm water storage pond system capable of holding runoff from a 100-year storm event. This large-volume system (Basins A, B, C and D) will receive storm water runoff from the gasification and other process areas and feedstock storage areas of the facility and will result in storm water from these areas rarely being discharged.

For the gasification storm water retention area, storm water will be routed to enclosed subsurface storm water Basin A, where it will be captured and returned for use in the gasification process. For other process areas, the first flush (1 inch) of storm water will also be routed to Basin A and returned for use in the gasification process, and rainwater greater than 1 inch would discharge to perimeter outfalls. Basin A does not discharge.

Storm water from the feedstock storage area may be routed to Basins B, C, and D. If Basin B were to discharge, it would discharge to Basin C. If Basin C were to discharge, it would discharge to Basin D. If Basin D were to discharge, it will discharge to Outfall 004.

Any water recycled for use as make-up water is not required to be sampled.

The figure below identifies areas of drainage and storm water outfall locations.

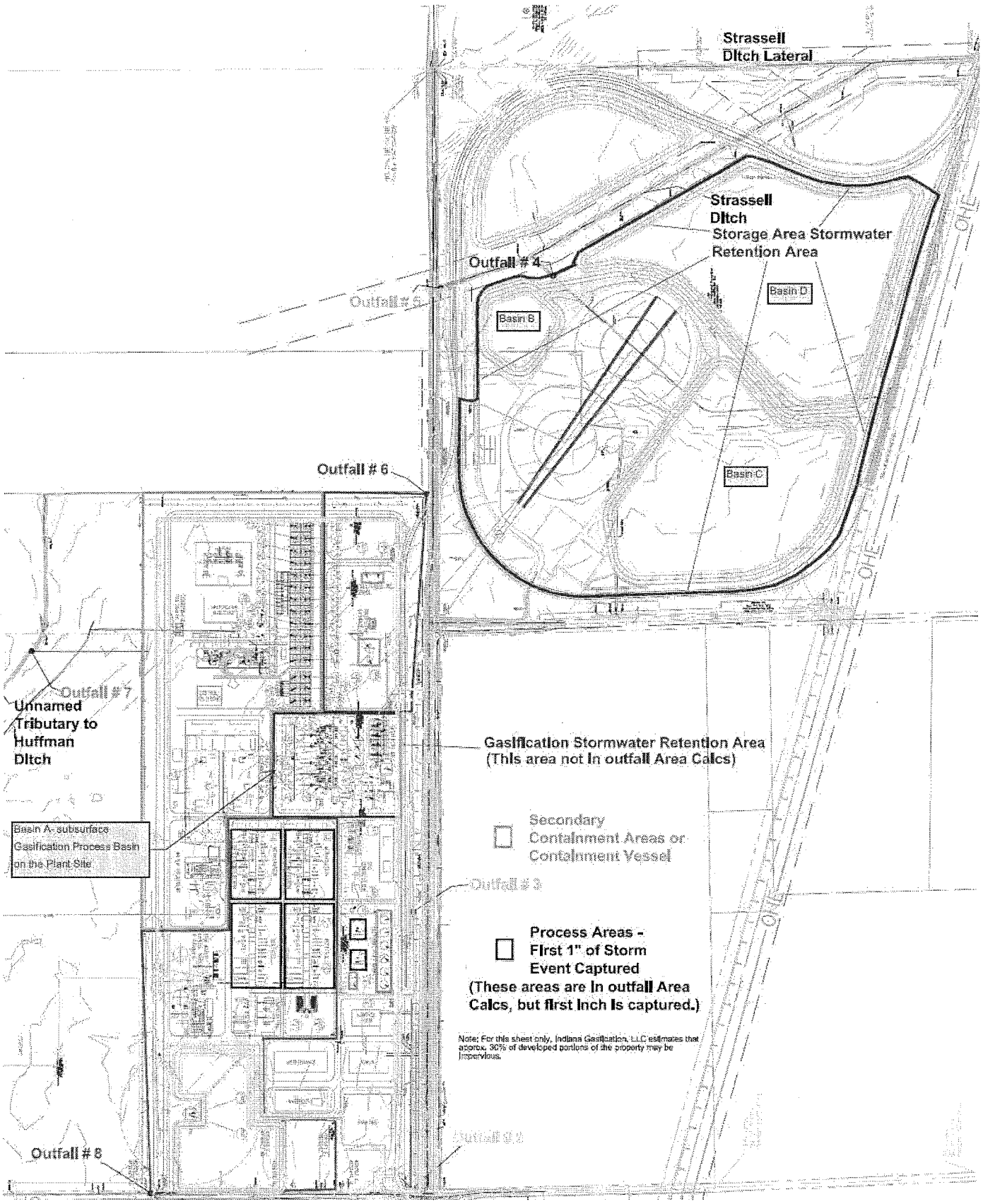


**Figure 3: Storm Water Drainage Diagram**

## 3.0 PERMIT HISTORY

This is a New NPDES Permit and has not recorded a compliance history.

## 4.0 RECEIVING WATER

The receiving stream for Outfall 001 is the Ohio River. The $Q_{7,10}$ low flow value of the Ohio River is 11,000 cfs and shall be capable of supporting a well balanced warm water aquatic community and full body contact recreation in accordance with 327 IAC 2-1-3.

The receiving stream for Outfalls 002 and 003 is a county roadside ditch on the east side of the facility. The receiving stream for Outfall 004 is an unnamed tributary to Strassell Ditch. The receiving stream for Outfall 005 is Strassell Ditch. The receiving stream for Outfalls 006 and 007 is an unnamed tributary to Huffman Ditch. The receiving stream for Outfall 008 is another county roadside ditch on the southwest corner of the facility. The $Q_{7,10}$ low flow values of the ditches and unnamed tributary is considered to be 0.0 cfs. However, all receiving streams shall be capable of supporting a well balanced warm water aquatic community and full body contact recreation in accordance with 327 IAC 2-1-3.

### 4.1 Receiving Stream Water Quality

The Ohio River is identified on the 2008 303(d) List of Impaired Waters, from Cannelton to Newburgh, Indiana, for mercury and PCBs in fish tissue. A Total Maximum Daily Load (TMDL) report has not been completed for this stretch of receiving stream. Strassell Ditch, Huffman Ditch, and the county roadside ditches are not identified on the 303(d) list.

## 5.0 PERMIT LIMITATIONS

Two categories of effluent limitations exist for NPDES permits: 1) Technology based effluent limits, and 2) Water quality based effluent limits.

Technology based effluent limits are developed by applying the national effluent limitation guidelines (ELGs) established by EPA for specific industrial categories. Technology based effluent limits were established to require a minimum level of treatment for industrial or municipal sources using available technology. In the absence of federally promulgated guidelines effluent limits can also be based upon BPJ. Technology based limits are the primary mechanism of control and enforcement of water pollution under the CWA. Technology based treatment requirements under section 301(b) of the CWA represent the minimum level of control that must be imposed in a section 402 permit [40 CFR 125.3(a)]. Accordingly, every individual member of a discharge class or category is required to operate their water pollution control technologies according to industry-wide standards and accepted engineering practices. This means that technology-based effluent limits based upon a BPJ determination are applied at end-of-pipe and mixing zones are not allowed [40 CFR 125.3(a)]. Similarly, since the statutory deadlines for BPT, BAT and BCT have all passed, compliance schedules are also not allowed.

Water quality based effluent limits are designed to be protective of the beneficial uses of the receiving water and are independent of the available treatment technology. In addition, when performing a permit renewal, there are existing permit limits. These may be technology-based limits, water quality-based limits, or limits based on best professional judgment. When renewing a permit, the most stringent of technology based or water quality based limits apply.

According to 40 CFR 122.44 and 327 IAC 5, NPDES permit limits are based on either technology-based limitations, where applicable, best professional judgment (BPJ), or Indiana Water Quality-Based Effluent Limitations (WQBEL's), whichever is most stringent. The decision to limit or monitor the parameters contained in this permit is based on information contained in the permittee's NPDES application.

The water quality-based effluent limitations for this facility are based on water quality criteria in 327 IAC 2-1-6 or under the procedures described in 327 IAC 2-1-8.2 through 327 IAC 2-1-8.6 and implementation procedures in 327 IAC 5. Limitations and/or monitoring are required for parameters identified by applications of the reasonable potential to exceed WQBEL under 327 IAC 5-2-11.1 (h)(1).

- Narrative Water Quality Based Limits
The narrative water quality contained under 327 IAC 2-1-6(a)(1) (A)-(E) have been included in this permit to ensure that the narrative water quality criteria are met.

- Numeric Water Quality Based Limits
The numeric water quality criteria and values contained in this permit have been calculated using the tables of water quality criteria under 327 IAC 2-1-6(b) & (c).

## 5.1 Technology-Based Effluent Limits

USEPA has been developing ELGs for existing industrial and commercial activities since 1972 as directed in the original Federal Water Pollution Control Act (40 CFR 403 through 471 inclusive). However, ELGs have not yet been developed for gasification dischargers. IDEM is establishing technology-based effluent limitations in the proposed permit utilizing Best Professional Judgment (BPJ) to meet the requirements of Best Conventional Technology and Best Available Technology Economically Achievable (BCT/BAT) [40 CFR 122.43, 122.44, 125.3, and 402(a)(1)]. The intent of a technology-based effluent limitation is to require a minimum level of treatment for industrial point sources based on currently available treatment technologies.

Although ELGs have not been developed for gasification industries, certain wastewater sources are identical in nature to wastewater sources addressed in Steam Electric Power Generating ELGs including the pollutants of concern (40 CFR 423). IDEM believes that it is appropriate to include BPJ technology limitations essentially the same as those found in Part 423. IDEM believes that the technical documents underlying the Steam Electric Effluent Limitation Guidelines provide sufficient record as to the need and the feasibility for the inclusion of such limitations. Since Indiana Gasification is a newly constructed facility, the discharge from the coal/petcoke storage area and cooling tower blowdown will receive BPJ technology-based effluent limitations similar to those identified in 40 CFR 423.15, New Source Performance Standards.

TBELs often apply at internal monitoring locations because they have to be met prior to being introduced to any other wastestream that will dilute the categorical wastestream. Internal Outfall 101 is established as the monitoring location immediately following the cooling tower blowdown point but prior to mixing with other water sources and/or wastestreams. The discharge from the coal/petcoke storage area does not require an internal monitoring point and will remain as the overflow point of Basin D, Outfall 004, because there are no additional wastestreams that contribute to the discharge.

40 CFR 423.15(j)(1) identifies effluent limitations for cooling tower blowdown. The effluent limitations include monthly average and daily maximum concentrations for free available chlorine, total chromium, and total zinc. In addition, there shall be no detectable amount of the 126 priority pollutants contained in chemicals added for cooling tower maintenance except chromium and zinc in the discharge of cooling tower blowdown. However, this agency has determined that monitoring requirements for the parameters

below are sufficient for analysis of cooling tower blowdown. The following parameters are included at Internal Outfall 101:

- Free Available Chlorine

  The TBEL for free available chlorine is 0.5 mg/l. However, free available chlorine is a portion of measured total residual chlorine (TRC). The WQBEL for TRC is more stringent than the TBEL. Therefore, TRC is limited at Outfall 001 by Indiana water quality standards.

- Total Chromium and Zinc

  The above identified parameters are included at Internal Outfall 101 and are required to be measured and reported in concentration twice yearly. The permit may be modified, after public notice, to reduce monitoring requirements or to add effluent limitation requirements, whichever is warranted by the effluent data.

- 126 Priority Pollutants

  A list of the 126 priority pollutants can be found in Appendix A of 40 CFR 423. 40 CFR 423.15(j)(3) states that, "compliance with the limitations for the 126 priority pollutants [contained in chemicals added for cooling tower maintenance]... may be determined by engineering calculations which demonstrate that the regulated pollutants are not detectable in the final discharge by the analytical methods in 40 CFR part 136". Total chromium and zinc are not included in this requirement, even though they are on the list of 126 priority pollutants, because they are specifically addressed in the permit.

40 CFR 423.15(k) identifies effluent limitations for coal pile runoff. The coal pile runoff from this facility is expected to be identical in nature to coal pile runoff from electric generating facilities. Therefore, the following parameter is included at Outfall 004:

- Total Suspended Solids

  40 CFR 423.15(k) identifies a daily maximum concentration of TSS not to exceed 50 mg/l. Pursuant to 40 CFR 423.15(l), any untreated overflow from facilities designed, constructed, and operated to treat the coal pile runoff which results from a 10 year, 24 hour rainfall event shall not be subject to the limitations in §423.15(k). The facility will be responsible for demonstrating the discharge is from such an event.

## 5.2 Water Quality-Based Effluent Limits

The Water Quality-Based Effluent Limits (WQBELs) were calculated using the criteria contained in Table 1 of 327 IAC 2-1-6, Minimum Surface Water Quality Standards, and the procedure contained in 327 IAC 5-2-11.1, Establishment of Water Quality-Based Effluent Limitations for Dischargers not discharging to Waters within the Great Lakes System.

<u>All Outfalls</u>

- pH

  Discharges to waters of the state are limited to the range of 6.0-9.0 s.u., in accordance with 327 IAC 2-1-6. This limitation applies to all outfalls.

- Flow

  The permittee's flow is to be monitored in accordance with 327 IAC 5-2-13(a)2. This requirement applies to all outfalls.

Outfall 001

- Temperature

Although a significant portion of the permittee's discharge is boiler blowdown and cooling tower blowdown, it is not expected to exceed Indiana's Water Quality Standards for temperature. Therefore, temperature monitoring at Outfall 001 is included to determine if a reasonable potential to exceed the water quality standards exists.

- Oil and Grease

Oil and Grease limitations are based upon 327 IAC 5-5-2(h)(2) and are 15.0 mg/l Daily Maximum and 10.0 mg/l Monthly Average at Outfall 001. Also, these limits are considered sufficient to ensure compliance with narrative water quality criteria in 327 IAC 2-1-6(a)(1)(C) that prohibits oil or other substances in amounts sufficient to create a visible film or sheen on the receiving water.

- Total Residual Chlorine

TRC limitations are included at Outfall 001 due to the use of sodium hypochlorite. The effluent limitations for TRC are 0.02 mg/l monthly average and 0.04 mg/l daily maximum.

The permittee will be considered in compliance with the permit limits for TRC if the effluent concentrations measured are less than the Limit of Quantitation (LOQ) of 0.06 mg/l. If the measured concentration of TRC is greater than the water quality based effluent limit and above the respective Limit of Detection (LOD) of 0.02 mg/l any three (3) consecutive analyses, or any five (5) out of nine (9) analyses, then the discharger shall re-examine the chlorination/dechlorination procedures.

The permittee may determine a case-specific LOD or LOQ using the analytical method specified below, or any other test method which is approved by the Commissioner prior to use. The LOD shall be derived by the procedure specified for method detection limits contained in 40 CFR 136, Appendix B, and the LOQ shall be set equal to 3.18 times the LOD.

| Parameter | Test Method | LOD | LOQ |
|---|---|---|---|
| Chlorine | 4500-Cl-D,E or 4500-Cl-G | 0.02 mg/l | 0.06 mg/l |

- Total Residual Oxidants

The monitoring requirement and effluent limitation for Total Residual Oxidants (TRO) will apply at Outfall 001 based on the use of Bromide as a water treatment additive. The same test methods to measure for Total Residual Chlorine are used to determine the level of Total Residual Oxidants. At present, two test methods are considered to be acceptable to IDEM, amperometric (EPA Method 330.1, 4500-Cl-D,E) and DPD colorimetric methods (EPA Method 330.5, 4500-Cl-G), to determine TRO concentrations at the level of 0.06 mg/l. Since currently available technology can easily treat to levels below method quantitation, the TRO limitation is incorporated into this permit as 0.06 mg/l. If another EPA test method is to be used, the method must first be approved by this Agency.

- Mercury

Mercury is recognized as a bioaccumulative compound of concern (BCC). The facility uses Ohio River water as make-up water to the cooling towers. Since the Ohio River is impaired for mercury in fish tissue, IDEM will include monitoring requirements for mercury to identify if mercury contained in the intake water is concentrated in the recirculating cooling tower to levels that cause excursions above Indiana water quality standards. Please refer to Section 6.4 of this Briefing Memo for additional information.

Outfalls 002 through 008

- Oil and Grease, COD, $CBOD_5$, Total Kjeldahl Nitrogen (TKN), Nitrate plus Nitrite Nitrogen, and Total Phosphorus

  These parameters are included as monitor only in all permits with storm water outfalls and are consistent with other similarly issued permits.

Outfall 004

- Iron, Manganese, Nickel, and Zinc

  These parameters are to be monitored because they are known to be present in the discharge of coal pile runoff. Once sufficient data has been collected, a review of the reporting requirement can be performed. The permit may be modified, after public notice, to reduce monitoring requirements or to add effluent limitation requirements, whichever is warranted by the effluent data.

## 5.3 Whole Effluent Toxicity

The permit does not contain a requirement to do WET Testing.

## 5.4 Antibacksliding

As this permit is for a proposed new facility, backsliding regulations do not apply.

## 5.5 Antidegradation

The permittee has submitted an antidegradation demonstration as part of their NPDES permit application. 327 IAC 2-1-2 states, in part, that, "All waters whose existing quality exceeds the standards established herein as of February 17, 1977, shall be maintained in their present high quality unless and until it is affirmatively demonstrated to the commissioner that limited degradation of such waters is justifiable on the basis of necessary economic or social factors and will not interfere with or become injurious to any beneficial uses made of, or presently possible, in such waters." Currently, proposed rules on downstate antidegradation procedures are on Public Notice (Proposed 327 IAC 2-1.3). The determination of the accuracy and completeness of this demonstration was based on Best Professional Judgment (BPJ) and the draft version of rules.

In the antidegradation demonstration, the facility highlights the fact that the only water proposed for discharge is non-process wastestreams and storm water. Therefore, the facility states that, "Because the substances were already present in the Ohio River water withdrawn for use at the facility and IG [Indiana Gasification] does not add amounts of any of these substances to the water being discharged (with the exception of small amounts of treatment chemicals), the mass of these substances in the intake water and the effluent flow essentially remain the same." Of the instances in which loadings may increase in the discharge, all have been demonstrated to be below 'de minimis' and not causing a significant lowering of water quality in the Ohio River. The antidegradation demonstration submitted shows that there will be no additional lowering of the water quality with respect to mercury.

Furthermore, the antidegradation demonstration identifies several measures considered and implemented during facility design and construction phases with the purpose of reducing potential impacts to the Ohio River. First, a Zero Liquid Discharge (ZLD) has been proposed at the facility. The ZLD will evaporate gasification process wastewater and recycle any concentrate back into the process. Second, storm water collected from process areas is directed to a 100-year storm event pond. Water from this pond will be taken for use as make-up water to minimize discharge impacts and supplement intake water demands.

Based on a review of the antidegradation demonstration, this agency determines that the discharge will comply with 327 IAC 2-1-2. A full copy of the Antidegradation Demonstration submitted by Indiana Gasification is provided as Appendix A of this Briefing Memo.

## 5.6 Stormwater

According to 40 CFR 122.26(b)(14)(ii) and 327 IAC 5-4-6(b)(1) facilities classified under SIC Code 28 are considered to be engaging in "industrial activity" for purposes of 40 CFR 122.26(b). Therefore the permittee is required to have all storm water discharges associated with industrial activity permitted. Treatment for storm water discharges associated with industrial activities is required to meet, at a minimum, best available technology economically achievable/best conventional pollutant control technology (BAT/BCT) requirements. EPA has determined that non-numeric technology-based effluent limits have been determined to be equal to BPT/BAT/BCT for storm water associated with industrial activity.

Storm water associated with industrial activity must be assessed to determine compliance with all water quality standards. The non-numeric storm water conditions and effluent limits contain the technology-based effluent limitations. Effluent limitations, as defined in the CWA, are restrictions on quantities, rates, and concentrations of constituents which are discharged. Effective implementation of these requirements is expected to meet the applicable water quality based effluent limitations. Violation of any of these effluent limitations constitutes a violation of the permit.

The technology-based effluent limitations require the permittee to minimize exposure of raw, final, or waste materials to rain, snow, snowmelt, and runoff. In doing so, the permittee is required, to the extent technologically available and economically practicable and achievable, to either locate industrial materials and activities inside or to protect them with storm resistant coverings. In addition, the permittee is required to: (1) use good housekeeping practices to keep exposed areas clean, (2) regularly inspect, test, maintain and repair all industrial equipment and systems to avoid situations that may result in leaks, spills, and other releases of pollutants in stormwater discharges, (3) minimize the potential for leaks, spills and other releases that may be exposed to stormwater and develop plans for effective response to such spills if or when they occur, (4) stabilize exposed area and contain runoff using structural and/or non-structural control measures to minimize onsite erosion and sedimentation, and the resulting discharge of pollutants, (5) divert, infiltrate, reuse, contain or otherwise reduce stormwater runoff, to minimize pollutants in your discharges, (6) enclose or cover storage piles of salt or piles containing salt used for deicing or other commercial or industrial purposes, including maintenance of paved surfaces, (7) train all employees who work in areas where industrial materials or activities are exposed to stormwater, or who are responsible for implementing activities necessary to meet the conditions of this permit (e.g., inspectors, maintenance personnel), including all members of your Pollution Prevention Team, (8) ensure that waste, garbage and floatable debris are not discharged to receiving waters by keeping exposed areas free of such materials or by intercepting them before they are discharged, and (9) minimize generation of dust and off-site tracking of raw, final or waste materials.

To meet the non-numeric effluent limitations in Part I.D.4, the permit requires Indiana Gasification to select control measures (including best management practices) to address the selection and design considerations in Part I.D.3.

The permittee must control its discharge as necessary to meet applicable water quality standards. It is expected that compliance with the non-numeric effluent limitations and other terms and conditions in this permit will meet this effluent limitation. However, if at any time the permittee, or IDEM, determines that the discharge causes or contributes to an exceedance of applicable water quality standards, the permittee must take corrective actions, and conduct follow-up monitoring.

**"Term and Condition" to Provide Information in a SWPPP**

Distinct from the effluent limitation provisions in the permit, the permit requires the discharger to prepare a Stormwater Pollution Prevention Plan (SWPPP) for its facility. The SWPPP is intended to document the selection, design, installation, and implementation (including inspection, maintenance, monitoring, and corrective action) of control measures being used to comply with the effluent limits set forth in Part I.D. of the permit. In general, the SWPPP must be kept up-to-date, and modified whenever necessary to reflect any changes in control measures that were found to be necessary to meet the effluent limitations in this permit.

The requirement to prepare a SWPPP is not an effluent limitation, rather it documents what practices the discharger is implementing to meet the effluent limitations in Part I.D. of the permit. The SWPPP is not an effluent limitation because it does not restrict quantities, rates, and concentrations of constituents which are discharged. Instead, the requirement to develop a SWPPP is a permit "term or condition" authorized under sections 402(a)(2) and 308 of the Act. Section 402(a)(2) states, "[t]he Administrator shall prescribe conditions for [NPDES] permits to assure compliance with the requirements of paragraph (1) of this subsection, including conditions on data and information collection, reporting, and such other requirements as he deems appropriate." The SWPPP requirements set forth in this permit are terms or conditions under the CWA because the discharger is documenting information on how it intends to comply with the effluent limitations (and inspection and evaluation requirements) contained elsewhere in the permit. Thus, the requirement to develop a SWPPP and keep it updated is no different than other information collection conditions, as authorized by section 402(a)(2), in other permits.

IDEM's Non-Numeric Effluent Limitations and SWPPP language was modeled from and is consistent with the EPA's Multi-Sector General Permit for Storm Water Discharges Associated with Industrial Activity, issued on September 29, 2008. It should be noted that EPA has developed a guidance document, "Storm Water Management for Industrial Activities: Developing Pollution Prevention Plans and Best Management Practices", 2009 to assist facilities in developing a SWPPP. The guidance contains worksheets, checklists, and model forms that should assist a facility in developing a SWPPP.

**Public availability of documents**

Part I.E.2.d(2) of the permit requires that the permittee retain a copy of the current SWPPP at the facility and it must be immediately available, at the time of an onsite inspection or upon request, to IDEM. Additionally, interested persons can request a copy of the SWPPP through IDEM. By requiring members of the public to request a copy of the SWPPP through IDEM, the Agency is able to provide the permittees with assurance that any Confidential Business Information contained within its SWPPP is not released to the public.

## 5.7 Water Treatment Additives

In the event that changes are to be made in the use of water treatment additives including dosage rates and concentrations contributing to Outfall 001, the permittee shall notify the Indiana Department of Environmental Management as required by Part II.C. 1. of this permit. The permittee must provide the acute and chronic aquatic toxicity information on any new or changed water treatment additives. The following water treatment additives have been approved for use: MegaFloc 450; Liquid Alum; Sodium Hypochlorite; Caustic Soda; Sodium Bisulfite; Sulfuric Acid; AZ8104 Inhibitor; Accepta 2206; Tower MP 5000; and Bromide Plus.

# 6.0 PERMIT DRAFT DISCUSSION

## 6.1 Discharge Limitations

Outfall 001

| Parameter | Monthly Average | Daily Maximum | Units |
|---|---|---|---|
| Flow | Report | Report | MGD |
| Oil and Grease | 10 | 15 | mg/l |
| Temperature | Report | Report | °F |
| TRC | 0.02 | 0.04 | mg/l |
| TRO | -------- | 0.06 | mg/l |
| Mercury | -------- | Report | ng/l |

| Parameter | Daily Minimum | Daily Maximum | Units |
|---|---|---|---|
| pH | 6.0 | 9.0 | Std Units |

Internal Outfall 101

| Parameter | Monthly Average | Daily Maximum | Units |
|---|---|---|---|
| Flow | N/A | Report | MGD |
| Total Chromium | N/A | Report | mg/l |
| Zinc | N/A | Report | mg/l |
| 126 Priority Pollutants[1] | N/A | Non Detect | mg/l |

[1] 126 Priority Pollutants contained in chemicals added for cooling tower maintenance (except chromium and zinc), which are found in Appendix A of 40 CFR § 423. Compliance with the limitations for the 126 priority pollutants contained in chemicals added for cooling tower maintenance (except chromium and zinc) may be determined by engineering calculations which demonstrate that the regulated pollutants are not detectable in the final discharge by the analytical methods in 40 CFR part 136.

Outfalls 002, 003, 005, 006, 007, and 008

| Parameter | Monthly Average | Daily Maximum | Units |
|---|---|---|---|
| Flow | N/A | Report | MGD |
| Total Suspended Solids | N/A | Report | mg/l |
| Oil & Grease | N/A | Report | mg/l |
| COD | N/A | Report | mg/l |
| pH | N/A | Report | mg/l |
| $CBOD_5$ | N/A | Report | mg/l |
| Total Kjeldahl Nitrogen | N/A | Report | mg/l |
| Nitrate plus Nitrite Nitrogen | N/A | Report | mg/l |
| Total Phosphorus | N/A | Report | mg/l |

Outfall 004

| Parameter | Monthly Average | Daily Maximum | Units |
|---|---|---|---|
| Flow | N/A | Report | MGD |
| Total Suspended Solids | N/A | 50 | mg/l |
| Oil & Grease | N/A | Report | mg/l |
| COD | N/A | Report | mg/l |
| pH | N/A | Report | mg/l |
| $CBOD_5$ | N/A | Report | mg/l |
| Total Kjeldahl Nitrogen | N/A | Report | mg/l |
| Nitrate plus Nitrite Nitrogen | N/A | Report | mg/l |
| Total Phosphorus | N/A | Report | mg/l |

## 6.2 Monitoring Conditions and Rationale

The monitoring frequency established for this NPDES permit is consistent with other similarly issued permits.

Outfall 001

| Parameter | Minimum Frequency | Type of Sample |
|---|---|---|
| Flow | Daily | 24-Hr. Total |
| Oil and Grease | 3/Week | Grab |
| Temperature | 3/Week | Grab |
| TRC | 3/Week | Grab |
| TRO | 3/Week | Grab |
| Mercury | 6/Year | 24-Hr. Composite |
| pH | 3/Week | Grab |

Internal Outfall 101

| Parameter | Minimum Frequency | Type of Sample |
|---|---|---|
| Flow | 2 X Yearly | Estimate Total |
| Total Chromium | 2 X Yearly | Grab |
| Zinc | 2 X Yearly | Grab |
| 126 Priority Pollutants | 2 X Yearly | Grab |

Outfalls 002, 003, 005, 006, 007, and 008

| Parameter | Minimum Frequency | Type of Sample |
|---|---|---|
| Flow | Quarterly | Estimate Total |
| Total Suspended Solids | Quarterly | Grab |
| Oil & Grease | Quarterly | Grab |
| COD | Quarterly | Grab |
| pH | Quarterly | Grab |
| $CBOD_5$ | Quarterly | Grab |
| Total Kjeldahl Nitrogen | Quarterly | Grab |
| Nitrate plus Nitrite Nitrogen | Quarterly | Grab |
| Total Phosphorus | Quarterly | Grab |

Outfall 004

| Parameter | Minimum Frequency | Type of Sample |
|---|---|---|
| Flow | Daily | Estimate Total |
| Total Suspended Solids | Daily | Grab |
| Oil & Grease | Quarterly | Grab |
| COD | Quarterly | Grab |
| pH | Daily | Grab |
| $CBOD_5$ | Quarterly | Grab |
| Total Kjeldahl Nitrogen | Quarterly | Grab |
| Nitrate plus Nitrite Nitrogen | Quarterly | Grab |
| Total Phosphorus | Quarterly | Grab |

## 6.3 Schedule of Compliance

The circumstances in this NPDES permit do not qualify for a schedule of compliance.

## 6.4 Special Conditions

Cooling Water Intake Structures

Section 316(b) of the federal Clean Water Act requires that facilities minimize adverse environmental impact resulting from the operation of cooling water intake structures (CWIS) by using the "best technology available" (BTA). U.S. EPA has promulgated rules to implement these requirements for new facilities (Phase I rules), large, existing power plants (Phase II rules) which are currently remanded, and offshore oil and gas extraction facilities (Phase III rules), and that implementation must take place through the issuance of NPDES permits.

The Phase I rule establishes technology-based performance requirements applicable to the location, design, construction, and capacity of cooling water intake structures at new facilities. This rule establishes BTA determinations for facilities that are newly constructed, required to have an NPDES permit, and that have a design intake flow equal to or greater than 2.0 MGD with at least 25% used as contact or noncontact cooling water purposes.

Federal Register, Vol. 66, No. 243 identifies a two track approach to permitting new CWISs. Track 1 of the Phase I rule identifies that, for facilities equal to or greater than 10 MGD design intake flow, CWISs must meet the following:

- Less than or equal to 0.5 feet per second through-screen intake velocity;
- Location and capacity-based limits on proportional intake flow (For fresh water rivers or streams, intake flow must be less than or equal to 5% of the mean annual flow;...); and
- Design and construction technologies for minimizing impingement mortality must be selected if certain conditions exist where the CWIS is located and design and construction technologies for minimizing entrainment must be selected and implemented.

The permittee has submitted documentation on the design and operation of the CWIS in a letter dated January 10, 2012. The facility has provided IDEM with information that indicates that the maximum design intake volume is 15.8 MGD, with a maximum thru-screen flow velocity of 0.498 ft/sec. Furthermore, a recirculating, closed-loop cooling tower is utilized. In addition, recycling of process wastewaters and storm water exposed to production areas to reduce water intake from the Ohio River.

Based upon this information and documentation provided, IDEM has evaluated the information and has determined that BTA requirements in Track 1 of the Phase I 316(b) rules have been met. A copy of the January 10, 2012, 316(b) submittal can be found on IDEM's Virtual File Cabinet (VFC) at www.in.gov/idem/6551.

In accordance with 40 CFR 125.87, Indiana Gasification is required to measure actual through-screen flow during this permit cycle to further characterize the nature and extent of the environmental impacts from the CWIS in a scientifically valid manner. This determination will be reassessed at the next permit reissuance to ensure that the CWIS continues to meet the requirements of Section 316(b) of the federal Clean Water Act (33 U.S.C. section 1326). In addition, a reopening clause has been added to the NPDES permit to allow IDEM a chance to modify permit in regards to the CWIS, if necessary.

In accordance with 327 IAC 2-1.5-8 the permit proposes that the Indiana Gasification CWIS must be designed and located to minimize entrainment and damage to desirable organisms. In general, the intake structure shall have minimum water velocity and shall not be located in spawning or nursery areas of important fishes. Water velocity at screens and other exclusion devices shall also be at a minimum. The specific requirements pertaining to the intake structures are contained in Part III of the proposed NPDES Permit.

Mercury

New mercury analytical and sampling methodology provide for limits of detection and quantification at levels below the water quality criterion, and the IDEM is requiring Indiana Gasification to utilize these methodologies to determine if their discharge has reasonable potential to exceed the water quality criterion.

The NPDES permit requires that mercury sampling be conducted bi-monthly in the months of February, April, June, August, October, and December of each year for the term of the permit. This shall be achieved by either installing appropriate analytical facilities or by obtaining the services of a commercial laboratory.

The permittee may submit a request for review of monitoring data after the first year of sampling has been completed using EPA Test Method 1631, Method E. The permit may be modified to reduce monitoring requirements for mercury if it is found that it will not be discharged at a level that will cause, have the reasonable potential to cause, or contribute to an excursion (RPE) above a water quality criteria. Conversely, effluent limits and monitoring requirements shall be added to the permit if RPE exists.

## 6.5 Spill Response and Reporting Requirement

Reporting requirements associated with the Spill Reporting, Containment, and Response requirements of 327 IAC 2-6.1 are included in Part II.B.2.c. and Part II.C.3. of the NPDES permit. Spills from the permitted facility meeting the definition of a spill under 327 IAC 2-6.1-4(15), the applicability requirements of 327 IAC 2-6.1-1, and the Reportable Spills requirements of 327 IAC 2-6.1-5 (other than those meeting an exclusion under 327 IAC 2-6.1-3 or the criteria outlined below) are subject to the Reporting Responsibilities of 327 IAC 2-6.1-7.

It should be noted that the reporting requirements of 327 IAC 2-6.1 do not apply to those discharges or exceedances that are under the jurisdiction of an applicable permit when the substance in question is covered by the permit and death or acute injury or illness to animals or humans does not occur. In order for a discharge or exceedance to be under the jurisdiction of this NPDES permit, the substance in question (a) must have been discharged in the normal course of operation from an outfall listed in this permit, and

(b) must have been discharged from an outfall for which the permittee has authorization to discharge that substance.

## 6.6 Post Public Notice Addendum

The draft NPDES permit for the Indiana Gasification Facility was made available for public comment from May 31, 2012, through July 16, 2012, as part of Public Notice No. 2012-5G-PH. In addition, a Public Hearing was held at South Spencer High School Auditorium on July 10, 2012. During the comment period and at the Public Hearing, comments were received. The comments submitted and this Office's corresponding responses are summarized below. Any changes to the permit and/or briefing memo are so noted below.

**Public Hearing Transcript:**
Below is a summary of comments given orally at the Public Hearing at the South Spencer High School Auditorium, 1142 North Orchard Road, Rockport, Indiana, on Tuesday, July 10, 2012, at 6:00 o'clock p.m. CDT. Only comments directly related to the NPDES permit are included in the Post Public Notice Addendum. A copy of the full transcript can be found at http://www.in.gov/idem/5338.htm

**Comment 1:**
MR. YOUNG:

My name is Bill Young.

On the permit process, does it work like if you have an individual -- right now we have three -- we have two plants that exist, I believe, that have discharge permits into the river. This would be a third one. Are the cumulative effects of that discharge into a short area of the river, does that come into consideration at all?

When you establish a maximum, and you say it's going to be two point something off the individual, and it meets the criteria, when it's all going into a mile area of the river or a short distance of the river, cumulatively, does that come into the permit consideration?

How typical is it -- when you have a new site that's being considered and approved, how typical is it for it to be asked to be modified within, say, one to two years? You have a new start-up. On paper, it's supposed to have X amount of discharge. They get opening the plant, a year goes by and they come back and ask for a modification. Is that very typical or -- that would be the second question I would ask.

**Response 1:**

Part of the process of considering if a discharge or effluent has the reasonable potential to cause or contribute to an exceendence of an in-stream criterion is to consider the contributions from non-point and point sources to the Ohio waterbody. The mathematical consideration of the contribution from other sources is done through the evaluation of the concentration to use for upstream, background, or ambient levels when developing the load to be allocated to the discharge. Therefore, when water quality-based limits are developed for a discharger, background data of the receiving stream is considered. The background data includes the effluent for all dischargers up stream.

In regards to future modifications and changes in anticipated concentrations of parameters, IDEM does evaluate the actual discharge concentrations once the facility begins the representative discharge. That evaluation cannot be performed until a discharge is generated. For example, there are many parameters included for monitoring and reporting purposes in the permit. These parameters are included because the facility anticipates the discharge of these pollutants, but anticipates them at levels below water quality criteria.

Therefore, IDEM is requiring the facility to monitor and report the values of these parameters so that actual effluent data can be looked at to verify that assumption. If those values are higher than what the facility has indicated at this point, and shows reasonable potential to exceed (RPE) water quality criteria, IDEM will then calculate and include a water quality based limit for that parameter.

**Comment 2:**
MR. BOTSKO:

Being a new facility and somewhat new technology, IDEM, of course, had to make a determination based on what the company provided them. We can only hope that the requirements that were added are enforced and that the continued -- monitoring is continued if it's added -- proposed to be built.

It's hard to -- for regular folks like us to imagine 11 million gallons of water coming out of the Ohio and out of the eight discharges that the plant's proposing, possibly only two million gallons going back in. We're losing it there.

What is disheartening is that IDEM does not take into consideration the cumulative effect of toxic releases in any particular area. When it releases the toxic waste inventory for state and county, Spencer has been rated -- the last time it came out with 2010 data, Spencer County came in second, next to Lake County, for the amount of toxic materials that are released into our air, water and land.

Based on this latest report, AK Steel released 11,759 tons and I&M released 2,712 tons of toxic materials into the land, air and water. Most of AK's went into the Ohio River. Why even have a toxic release inventory? What is its purpose if IDEM doesn't look at it, and looks at each permit as an isolated location? Where's the environmental justice, and why are we allowing this plant to be built here?

**Response 2:**

11 Million Gallons a Day (MGD) is the anticipated average withdrawal from the Ohio River. The vast majority of this volume will be lost to evaporation. Other water losses include process loss, make-up water backwashes, etc. The facility is NOT authorized to discharge process wastewaters.

While many facilities base their TRI data on monitoring data, others report estimated data to TRI, as the TRI program does not mandate monitoring. Various estimation techniques can be used when monitoring data are not available, and EPA has published estimation guidance for the regulated community. Variations between facilities can result from the use of different estimation methodologies. These factors should be taken into account when considering data accuracy and comparability between TRI data and water quality issues. Because of the possible variations and inconsistencies in testing and reporting methodologies, and even discrepancies between pollutant parameters, TRI data is not suitable to determine the need for water quality based effluent limits. Actual monitoring data representative of the discharge is required. Please refer to Response #1 in regards to water quality-based effluent limitations.

**Comment 3:**
MR. KAMUF:

I was a SIMS engineer in a power plant right here in Indiana, so I do agree, I have seen people cheat. When it comes down to it, if you're an engineer and you're about to fail some quality standard, you will make the lights work right, whatever you have to do. If you have to top the solenoids, introduce gas, you will. You don't want to report to the plant manager, you just do it to save your permit.

And the ramifications of that, the bureaucracy and the legal, I haven't done it, but I have seen it done. It will be done if someone really thinks it's going to be a bad indication on their job in some way if they didn't maintain the test equipment properly. Believe me, after a while when people use the equipment, they'd offer me how to gerrymander it. I've seen it.

And you would think there are things that are buried deep within the electronic records that we'd catch people doing that. In reality, when you're dependent on resource, that kind of investigative work isn't done.

Of course, there will be -- independent outside contractors will come in and verify this in the end, once or twice a year, but in between those points they'll operate as they wish, in my opinion. They will make these pollution standards work one way or the other.

What is -- what is the thermal ramification? How much heat is this going to add to the Ohio River, the process of doing this? -- what is the water quality levels nationally here for Spencer County? That is kind of my question. I would love to see that in writing. It's the fourth most polluted county, I believe, in the United States. What is the water standards overall compared to the rest of the United States?

**Response 3:**

The facility is required to self-monitor and report all those results to the agency. This is the program set up by EPA to demonstrate compliance with the Clean Water Act. IDEM understands your concern about the accuracy and adequacy of that practice. IDEM inspects NPDES permitted facilities and looks specifically for indications of inaccurate reporting. IDEM investigates all instances when they are found, either by inspection or report filing, and take enforcement against the facility to make sure it comes into compliance with ALL permit conditions.

The anticipated thermal component of the discharge was analyzed and does not appear to cause an excursion above water quality criteria for temperature. As indicated in Response 1, once actual data can be analyzed, temperature requirements will be fully evaluated and water quality based effluent limits applied if necessary.

Finally, IDEM cannot adequately provide an assessment of water quality for an entire region. Water quality depends on a myriad of qualifiers, such as which pollutant parameter is in question, which receiving stream one is looking at, the time of year, and the existing uses of that stream. What IDEM can provide is an assessment based on impairments. For example, Section 4.1 of the Briefing Memo provides, "The Ohio River is identified on the 2008 303(d) List of Impaired Waters, from Cannelton to Newburgh, Indiana, for mercury and PCBs in fish tissue."

**Comment 4:**

MR. PEARCE:

You said that this zero effluent discharge is not a tried-and-true technology, it hasn't been around a hundred years, and you don't have any standards for gasification yet. Maybe this plant shouldn't be approved until you do have some standards for gasification.

Why should we trust the industry to monitor itself? We saw how that worked out with the banking industry and Wall Street. Industry is not doing a really good job of monitoring itself. And you said -- I said, "Who's in charge of monitoring these -- these discharges?" They are. I wouldn't trust them. I wouldn't trust them to do anything, much less monitor their own toxins.

So, you're going to say there's going to be zero discharge. The fact there is it's going to be one more pile of coal sitting on the Ohio River, and anywhere there's a pile of coal, there's going to be mercury. Anywhere there's a pile of coal, there's going to be some runoff.

There's nothing in the design of this plant that can stop that. Anywhere you're dumping coal off on the ground, you're going to have more -- you're going to have more discharge, not from the plant, just from the fact that there's a pile of coal sitting there.

The last thing I want to say is this: Have you thought about the 16 million gallons of water? So, you've got zero effluent discharge, supposedly. Sixteen million gallons of water out -- again, nothing going out to a river that's stressed, right now at one of its lowest points in years. Granted, it floods sometimes, but what happens when the river -- there's one more company taking 16 million gallons of water out of river a day, at a time under drought conditions? Have you taken that into consideration?

**Response 4:**

Effluent limitations and identification of potential pollutants often come from federally promulgated effluent guidelines. As mentioned, there are no federally promulgated effluent guidelines for coal gasification facilities. This facility however, is utilizing a zero liquid discharge (ZLD) technology and will not be discharging any process wastewater to waters of the state. There are many types of industries that are not categorized in federally promulgated effluent guidelines. In such instances, pollutants are limited by Water Quality-Based Effluent Limitations and, in instances where wastestreams are substantially similar to another federally promulgated effluent guideline category, by using Best Professional Judgment. For example, the discharge from the IG facility consists primarily of cooling tower blowdown. Therefore, federally promulgated effluent guidelines for cooling tower blowdown from the Steam Electric Generating category was utilized in conjunction with Water Quality-Based Effluent Limitations. The other discharges are a variety of nonprocess wastewaters and some stormwater.

For a response to the adequacy of self-monitoring, please refer to Response 3.

Discharges associated with the coal pile runoff have parameters included to monitor the potential water impacts. These parameters include those most indicative of metals leaching from coal into storm water. Once actual data has been established, those parameters and concentrations will be analyzed to determine if effluent limitations would be more adequate.

Additionally, the permit requires the development and implementation of best management practices (BMP) to prevent runoff and dust pollution from coal piles and coal transport. It is the responsibility of the permittee to determine which BMPs to implement

to achieve compliance with the permit limits. Storm Water Monitoring and Non Numeric Effluent Limits and the Storm Water Pollution Prevention Plan (SWP3) requirements can be found in Parts I.D. and I.E of the permit, respectively.

In regards to the amount of water to be pulled from the Ohio and not discharged in, the above comment is incorrect. As indicated in Response 4, the vast majority of this water will be evaporated. In addition, there is no authorization to discharge process wastewater. There will be, however, an anticipated 2 MGD a day going back into the Ohio River.

**Comment 5:**
MR. ISBILL:

We've already heard that the Ohio River is one of the highest polluted rivers, if not the highest polluted river, in America. And so, why would we ever as an agency make a decision to put more pollutant in our air and in our rivers? You have the moral obligation to not say, "A little more, but a little less."

It is your obligation as an agency to protect us, not pollute more, not to allow more, not to say, "A little more." When is enough enough? Enough is already enough, and you have the obligation to say no to this permit. It is time that agencies that put up those type of presentations that we saw a while ago, that sound so wonderful, and then you let the industry self-monitor itself, it's time those agencies become accountable to the citizens.

I fear -- not fear. I hope that there will be litigation towards you if this is passed, because I know that they will not monitor themselves. They won't do it. This company will not self-monitor either, and you know it. You know that they will not meet the standards that you've put up on that screen. You know it. And knowing that and presenting that is fraud to the American people. It is time that you as an agency need to be held accountable for your actions to us for granting permits to people that you know will not monitor them, will not meet those standards.

And it's time that you say no, to stop this pollution, to stop this process, to stop this negative impact onto our communities. It's time you said that.

**Response 5:**

For a response to the adequacy of self-monitoring, please refer to Response 3. The monitoring results are submitted to IDEM in Discharge Monitoring Reports (DMRs) and Monthly Monitoring Report (MMRs). Failure to submit these documents is an automatic violation. Frequent violations would prompt enforcement action for the permittee ranging from a "cease and desist order" to an "agreed order" identifying remedial actions established by IDEM.

The discharge limitations contained in this NPDES permit are consistent with the requirements of the Clean Water Act, ensuring protection to human health and the environment. This permit has been reviewed by U.S. EPA and the final permit meets all State and Federal requirements.

**Comment 6:**
MR. WINCHELL:

And I read your materials that you filed at Rockport's public library, and I must say that your testing procedures in there sound great, but this catalog that I got from them tonight is the only

thing that has the types and amounts -- and the little talk you gave -- the types and amounts of pollutants that may be produced as a byproduct of producing syngas.

This plant is going to produce an additional amount of pollution in an area, as we've heard, that is already severely polluted, toxic pollutions. You know it.

And my question is: How many of your personnel in IDEM will be available to test the effluent water from this proposed plant? Darn few, I'm sure. And you will rely on the people who are operating that plant to do the testing, and we just heard from the engineer here what happens in that situation.

Now, it seems that your agency accepts data that is proposed by the proponents of the syngas plant without doing much, if any, research to verify their data. Now, you said there are other coal gasification plants operating here in the United States. Have you checked with them to see what is coming out or what they say is coming out as byproducts from the process? Have you?

Tons of coal and coal ash will pollute the air, soil, water, eventually poisoning the river and the aquifer of this area, and you know it.

**Response 6:**

As noted earlier, there will be no coal combustion at this facility, thus, no coal ash, fly ash, or ash sluice water. The discharge authorized in this NPDES permit is for non-contact cooling waters, non-process wastewaters, and storm water.

For a response to the adequacy of self-monitoring, please refer to Responses 3 and 5.

The discharge limitations contained in this NPDES permit are consistent with the requirements of the Clean Water Act, ensuring protection to human health and the environment.

**Comment 7:**

MR. UTTER:

It appears to me that this permit, this is a solid draft.

**Response 7:**

Statement; no response needed.

**Comment 8:**

MS. WEBB:

The permit indicated that the plant would pull water from the river for the gasification process, filter and reuse some of the water, and evaporate the rest. It also indicated that the plant will pull water from the river for the boiler and cooling tower. In short, this plant will require a lot of water. The source will be the Ohio River, my source for drinking water.

One week ago, the State Department of Natural Resources and the Indiana Department of the Homeland Security declared a water shortage warning for 32 counties, including Spencer and Vanderburgh Counties. The U.S. drought monitored map shows both counties coded D-3, drought extreme.

The EPA Web site on climate change captures my concern well. It says, and I quote in content, rising temperatures, changing precipitation patterns and increasing droughts will affect the amount of water in lakes, rivers and streams, as well as the amount of water that seeps into the ground to replenish ground water.

Public water supplies are at stake. Communities might have to find new sources of water to support their needs. People might also have to adapt to using less water. Droughts are expected to keep getting longer and more severe.

My request is that I would like IDEM and the U.S. EPA to evaluate this permit through the lens of climate change. We all need the water. It's a limited resource, and expected to grow more scarce. I don't want to share my water with a plant that will significantly add toxins to my air, cost me as a taxpayer to fund its being built, cost me as a utility ratepayer due to Mitch Daniels' 30-year contract, cost me in increased health care premiums when the general population is sickened by its pollution, and enrich investors in hedge funds at my expense.

I don't want to share my water with them. Please do not approve this permit. .2 percent of the river is too much, according to my BPJ, best professional judgment.

Thank you.

**Response 8:**

IDEM does not believe the volume of water removed at the IG facility, in conjunction with water withdrawals at AEP, AK Steel, and other facilities, are great enough to create a burden on the Ohio River's water quality or ecology. No changes are being made in response to this comment.

**Comment 9:**

MS. OGLESBY:

What I said was I agree with so much of what has already been said tonight, but I just wanted to come up here for emphasis. I live in Southwest Indiana, and my drinking water comes from the Ohio River. This plant would place additional strain on the Ohio River, as we've heard already identified, as the most polluted waterway in the United States.

Furthermore, we know that the Rockport area of Spencer County emits more toxic pollution than New York, Chicago and Los Angeles combined.

**Response 9:**

The discharge limitations contained in this NPDES permit are consistent with the requirements of the Clean Water Act, ensuring protection to human health and the environment.

**Sierra Club Form Letter:**

During the public comment period, Sierra Club posted on their webpage a letter regarding the Indiana Gasification facility. This letter was a form letter template in which concerned citizens could add any additional wording and submit to IDEM via electronic mail. Over 1,000 emails were received. Below is the standard form letter without modification:

**Comment 10:**

Dear Permit Manager Hamblin,

The Ohio River is now the most polluted rivers in the United States according to the Pittsburgh Business Times and Penn Environmental. We do not want yet another dirty coal plant on the banks of the Ohio River.

Rockport IN, Owensboro KY, and the surrounding counties already bear the brunt of some of the most toxic emissions in the world.

We want a future that is not tied to destroying our river, our economy, and our communities. We do not want to pay the increased cost of synthetic gas produced from coal that is up to three times more expensive that natural gas. This 2.9 billion dollar plant is a corporate giveaway that puts the burden of the cost on our river, taxpayers, residential ratepayers, and our communities. We deserve better!

We are not convinced that Leucadia can take 11 million gallons of water from the Ohio River every day and produce no waste water. This is a process that has never been proven to work. Please do not make our community suffer for this overpriced experiment.

**Response 10:**

11 Million Gallons a Day (MGD) is the anticipated average withdrawal from the Ohio River. The vast majority of this volume will be lost to evaporation. Other water losses include process loss, make-up water backwashes, etc. The facility is NOT authorized to discharge process wastewaters.

While many facilities base their TRI data on monitoring data, others report estimated data to TRI, as the TRI program does not mandate monitoring. Various estimation techniques can be used when monitoring data are not available, and EPA has published estimation guidance for the regulated community. Variations between facilities can result from the use of different estimation methodologies. These factors should be taken into account when considering data accuracy and comparability between TRI data and water quality issues. Because of the possible variations and inconsistencies in testing and reporting methodologies, and even discrepancies between pollutant parameters, TRI data is not suitable to determine the need for water quality based effluent limits. Actual monitoring data representative of the discharge is required. Please refer to Response #1 for further information of developing water quality-based effluent limitations.

As mentioned above, citizens submitting the above letter could provide additional wording if they wanted. Many of the letters submitted containing additional wording did not provide concerns directly related to the NPDES permit, permitting processes, or water quality issues. Only comments directly related to the NPDES permit are included in the Post Public Notice Addendum. The following are those comments and IDEM's response:

**Comment 11:**

...We have been led to believe this would be using the best available technology to reduce emissions but I never heard any talk about the water use and pollution there. If you cannot 100% guarantee you will not pollute the river or the air or anything for that matter then you need to stop.

Sincerely,
Mr. James Loose

**Response 11:**

There will not be a process wastewater discharge to waters of the state. The permit authorizes only non-process wastewaters such as non-contact cooling, cooling tower and boiler blowdown, etc., and some stormwater. This NPDES permit is written in accordance with the requirements found in the Clean Water Act and are protective of human health and the environment. No changes are being made in response to this comment.

**Comment 12:**

...As the Ohio River is a major waterway, and already has more than enough pollutants in it, there must not be any more added to this rivers' load. Rivers, like lakes, support the ecosystems of the surrounding areas. The Ohio needs to be cleaned up, not made worse! The benefits to plants, and animals, whose health and survival, depend all, or in part on this river outweigh the value of "corporate profits"! Remember, also, that as the Ohio is one of the two largest rivers that feed into the Mississippi, the effects go even farther. This time, is the time to say, NO!....

Sincerely,
Mr. Sam Siklas

**Response 12:**

Please refer to Response 11.

**Comment 13:**

...The last thing Southern Indiana needs is more mercury pollution; there's way too much now & the increased medical costs make the "jobs gain" a poor argument. No water permit for this polluter!!!....

Sincerely
Dr. Scott Myerly

**Response 13:**

Please refer to Response 11.

**Comment 14:**

...As a mother I feel compelled to put in my opinion on this new plant they are wanting to put in. It is not safe, healthy, or at all what we need as far as all the pollution to our communities and river. I don't think that the benefits of the jobs it would bring would outweigh the damage that it will do. I know that our economy sucks and that we need more jobs created but can't we create some that are less hazardous to everyone? The plant gets put in say next year, fast forward 10 years and what do you think the pollution and the air quality is going to be like then?

When I was a kid I was not at all afraid of the river. We swam in it, at the fish from it and our drinking water still comes from it and it is by far the nastiest waterway in America. I won't even let my dog swim in the river now.

PLEASE DO NOT POLLUTE OUR TOWNS AND WATER ANYMORE. THINK OF OUR CHILDREN AND OUR CHILDREN'S CHILDREN!!!! THIS PLANT MIGHT BE IN THE ECONOMIC BEST INTEREST TO ADD FOR JOBS BUT WHAT GOOD IS JOBS GOING TO BE IF PEOPLE ARE SICK AND CAN'T WORK....

Sincerely,
Ms. Honey Miles

**Response 14:**

Please refer to Response 11.

**Comment 15:**

IDEM may well issue the NPDES permit for the Indiana Gasification plant, as consistent with environmental laws and regulations. But, that is not reassuring. Too often, self-monitoring programs for toxic effluents are neglected or corrupted by industry. And, the government environmental regulators do not have adequate resources to monitor these industries closely enough.

If IDEM cannot ensure that the Ohio River will not sustain ever growing pollutions from the IG plant, it should not approve the subject NPDES....

Sincerely,
Mr. Gary Adams

**Response 15:**

The discharge limitations contained in this NPDES permit are consistent with the requirements of the Clean Water Act, ensuring protection to human health and the environment.

In addition to the form letter provided by Sierra Club, a comment letter dated July 16, 2012, was received from Thomas Cmar, Midwest Program Attorney for the Natural Resources Defense Council, and from Steve Francis, Chairperson of the Hoosier Chapter of the Sierra Club.

**Comment 16:**

The undersigned concur in IDEM's finding in the Draft Permit that a reverse osmosis "zero liquid discharge" system is the best available technology to treat process wastewater from the proposed Indiana Gasification facility, and we applaud IDEM for not authorizing any discharges of process wastewater from the facility in the Draft Permit. As recognized by U.S. EPA, zero liquid discharge treatment systems are an available technology that is an available technology for treating power plant wastewater without any resulting liquid effluent. *See* Memorandum from James A. Hanlon of EPA's Office of Water to EPA Water Division Directors, dated June 7, 2010, at Attachment A, *available at* http://cfpub.epa.gov/npdes/docs.cfm?view=allprog&program_id=14&sort=date_published

The undersigned further concur in the Draft Permit's requirements that the Indiana Gasification facility employ a closed cycle cooling system in compliance U.S. Environmental Protection Agency regulations implementing Clean Water Act Section 316(b) for new facilities, 40 C.F.R. §§ 125.80 – 125.89. Closed-cycle cooling already has been demonstrated to be readily available and achievable, with hundreds of facilities nationwide using closed-cycle cooling. Virtually all gas-fired plants and more than 75 percent of coal plants built in the past 30 years use closed-cycle cooling or, even better, the state-of-the-art dry cooling technology, which uses little or no water at all. *See* Notice of Data Availability; National Pollutant Discharge Elimination System—

Regulations Addressing Cooling Water Intake Structures for New Facilities, 66 Fed. Reg. 28,853, 28,855-56 (May 25, 2001).

IDEM's decision to require both zero liquid discharge treatment for process wastewater and a closed-cycle cooling system for cooling water set a high bar for this facility and any future new facilities proposed in Indiana. The undersigned will oppose any attempt by either this permit applicant or any future new facility permit applicant to move forward with construction of a new facility in Indiana that does not incorporate technologies at least as effective as zero liquid discharge wastewater treatment and closed cycle cooling.

Unfortunately, the applicant failed to provide a detailed engineering analysis underlying its decision to move forward with these technologies. This undermines the public's faith in the process because subsequent engineering studies may lead the applicant to demand that the permit be altered later, due to cost or other reasons, after substantial construction has already taken place. The public should have been given the opportunity to comment on the full scope of the applicant's plans in connection with this comment period on the Draft Permit, including the ability to examine detailed engineering.

**Response 16:**

Any future modification to this NPDES permit potentially resulting in less stringent monitoring requirements, new effluent limitations, or otherwise relaxed permit conditions, will be subject to antibacksliding and antidegradation regulations, and a minimum of 30 day public comment period will be provided.

A comment letter was sent via electronic mail dated July 16, 2012, from Mr. John Blair, President of Valley Watch, Inc. His comment and IDEM's response is so noted below.

**Comment 17:**

While we applaud IDEM for issuing a permit that looks really good on paper, including items like Zero Liquid Discharge and closed cycle cooling for this plant, we greet this whole process with some skepticism since in the past, other "good" permits have been modified once construction has begun to not require the rigid standards demanded by the original issued permit. This skepticism is especially valid in our view due to the new and experimental nature of the whole Indiana Gasification business plan which makes no sense from an economic standpoint and could result in a serious need for the applicant to cut corners in order for them to make the profit they so desire. Add to that the rather dismal record of enforcement that IDEM has accrued in the past decade and you can see justification for our concerns.

If IDEM is serious about granting and enforcing such a permit without future modification, then we acknowledge that this permit is a good product that warrants wide community support and will set a precedent for future issuance of NPDES and attendant permits from IDEM.

**Response 17:**

Please refer to Response 16.

A comment letter was sent via electronic mail dated July 13, 2012, from Mr. Alec Kalla. His comments and IDEM's responses are so noted below.

**Comment 18:**

On page 5 of 56, under Discharge Limitations [1], the phrasing is confusing. Actual measurements of pollution are preferable to engineering calculations and should be required. Why aren't they required in plain English? How accurate are the bases upon which the calculations are to be made?

**Response 18:**

The language in footnote [1] has been modified to include the federal regulation verbatim. The option of determining compliance with the 126 Priority Pollutants with engineering calculations is in the corresponding federal regulation and will remain an option for this NPDES permit.

**Comment 19:**

Beginning on page 30 of 56: the Pollution Prevention Plan is not required for 12 months after startup of the facility. This plan should be extant at startup; why isn't it?

**Response 19:**

IDEM allows for up to 12 months after startup of a facility to account for facility characteristic changes made through the startup process. This gives the permittee the chance to account for all operational modifications made at the facility before determining adequate control measures for storm water and areas with storm water exposure. No changes are made in response to this comment.

**Comment 20:**

According to 9. on page 51 of 56, 9., the operator is to report changes in pollution. Nowhere in the draft permit did I see listing of Polynuclear Aromatic Hydrocarbons, PAHs, which, according to newspaper reporting of quotes from an IDEM agent, will be present on/in the surface/soil where coal is stored or burned. See *The Louisville Courier Journal*, 12 & 13 May 2011 re: IDEM fining Kentuckiana Trucking for disposal of soil from the Louisville (Yum) event center. Indiana Gasification will at the least be storing coal. It will also operate an uncontrolled flare. Land surface at the facility will be exposed to PAHs, therefore, and storm water is unlikely not to contain this pollution. Why are PAHs pollution not listed and limited in the permit?

**Response 20:**

Coal gasification does not combust coal. Therefore, there should be no concern of byproducts from coal combustion. The coal feedstock is stored in a bermed area with collection ponds to collect all storm water that has come into contact with coal. PAHs in coal pile run-off are typically associated with total suspended solids (TSS). For the relevant outfall, Outfall 004, the permit limits TSS to 50 mg/l and requires regular monitoring. In addition, as described in Section 2.5 of the Briefing Memo, the storm water runoff from the coal storage area will be directed to a large-volume storm water storage pond system capable of holding runoff from a 100-year storm event, resulting in storm water from that area being discharged only rarely.

In addition to comments received from concerned citizens and environmental watch groups, a letter from U.S.EPA was received. The letter can be found in Appendix B of the Briefing Memo. In response to the letter, the following changes have been made:

- Section 2.2 of the Briefing Memo has been modified to identify the receiving water bodies with corresponding outfalls.
- Unidentified/unnamed roadside ditches are more clearly identified on Pages 7 and 9 of the Briefing Memo and Pages 6 and 10 of the Permit.
- The 2009 SWPPP guidance document has been added to Page 15 of the Briefing Memo.
- The phrase, "and at least one member for your Pollution Prevention Team" has been added to Part I.D.9.c of the Permit.
- The second paragraph of Part I.D.9.c(1) and all of Part I.D.9.c(2) have been placed in Part I.D.9.a.
- Standard conditions for an anticipated non-compliance has been added to Part II.C.4.

# Appendix A

Antidegradation Demonstration

**Antidegradation Analysis and Demonstration**

**Indiana Gasification, LLC**
**Spencer County, Indiana**
**(May 2012)**

## 1.0 Introduction

Indiana Gasification, LLC (IG) submits this document to satisfy the Antidegradation Analysis and Demonstration (AAD) requirements that may be applicable to IG's requested NPDES permit for a facility to be constructed in Spencer County, Indiana. The requested permit will include appropriate effluent limitations and other requirements for the proposed facility. As described in more detail below, the IG facility has been designed to significantly limit the amount of water used and returned to the Ohio River. Gasification process wastewater will not be discharged, and any discharge will comply will all applicable water quality-based effluent requirements. Any impact to the Ohio River will be minimal and IG believes the discharge will not cause "limited degradation" that would require an anti-degradation demonstration under the rule or interfere with or become injurious to any beneficial uses made of, or presently possible, in the river. However, IG is taking this opportunity to describe the technologies to be utilized to achieve this result and describe the social and economic benefits of the project that would justify any minimal impacts that might occur.

## 2.0 Project Description

IG proposes to construct and operate a substitute natural gas (SNG) and liquefied carbon dioxide (CO2) production plant near the Ohio River in Spencer County, in Rockport, Indiana. The proposed facility will utilize a state-of-the-art quench gasification process to convert Illinois Basin coal and petroleum coke into pipeline quality SNG and liquefied CO2. The project will produce annually up to 48 billion standard cubic feet (Bscf) of SNG (utilizing approximately 3.5 million tons of feedstock) and approximately 4.9 million tons of liquefied CO2 that will be sold to third parties for use in Enhanced Oil Recovery (EOR).

### 2.1 Wastewater Characterization

IG will withdraw up to approximately 16 million gallons per day (gpd) from the Ohio River for plant process and cooling use. The intake water will be treated/clarified to a quality suitable for cooling water makeup, service water, and fire water. The facility's only outfall to the Ohio River – Outfall 001 – will include only non-contact utility water, composed of cooling water blowdown, boiler blowdown, reverse osmosis/de-mineralizer reject water, water from the oil/water separator (includes small volumes of utility water and stormwater collected from process areas), and small amounts of the chemicals used to treat the water. IG expects to discharge up to approximately 2.5 million gpd back to the Ohio River.

No gasification process wastewater will be discharged, meaning that the effluent is essentially a concentration of the naturally occurring dissolved and suspended materials present in the river water, plus small concentrations of treatment chemicals used to make the water suitable for use in boilers, cooling towers, and other processes. Because the substances were already present in

the Ohio River water withdrawn for use at the facility and IG does not add amounts of any of these substances to the water being discharged (with the exception of small amounts of treatment chemicals), the mass of these substances in the intake water and the effluent flow essentially remain the same. In some cases, the mass released at Outfall 001 is projected to be less than the mass taken up from the river at the intake. The one exception where an increase in mass loading may be observed is sulfates. As is common for cooling tower operations, sulfuric acid is fed to the cooling tower in order to decrease the alkalinity of the water. This helps prevent scaling, which in turn allows for the cooling tower to be cycled (it is expected that the noncontact cooling water will be reused through up to seven cycles of concentration), reducing the volume of water required. This addition of acid will add sulfates to the cooling water blowdown. Still, as described below, this slight increase in mass of sulfates is only a de minimis impact to the Ohio River. The projected mass loadings are illustrated in Attachment A.

Also, the total effluent flow will be extremely small compared to the flow of the Ohio River. At the worst case, when the 7-day, 10-year low flow of the Ohio River is compared to the IG effluent flow, the ratio of maximum IG effluent to Ohio River low flow is 2,500,000/7,111,000,000 gpd, or less than 0.0004:1. Stated another way, at low flow, 10,000 gallons of river water receives less than 4 gallons of effluent which contains no process wastewater.

### 2.1.1 Treatment Elements that Reduce Impact to the Ohio River

Several elements of the facility's design substantially reduce the impact to the Ohio River by reducing the amount of water taken from the river or reducing the pollutant loadings in the effluent.

#### 2.1.1.1 Zero Liquid Discharge System

IG will utilize a Zero Liquid Discharge System (ZLD) to evaporate gasification process wastewater rather than discharge it to surface waters. In this system, the gasification blowdown will be concentrated through filtration and evaporation. The water recovered from the ZLD will then be returned to the plant processes or otherwise reused, while the dissolved and suspended material in the process wastewater will be crystallized and disposed offsite as a solid waste, resulting in no process water being discharged. The use of this enhanced treatment technology greatly reduces the impact to the receiving stream by eliminating process wastewater from the plant effluent, and minimizes the total volume discharged from the facility.

#### 2.1.1.2 Water Recycle and Reuse

IG has also designed its facility to recycle and reuse substantial amounts of noncontact cooling waters and process wastewaters. Doing so reduces water withdrawal rates, and, accordingly, the amount discharged. The facility is designed to discharge as little as approximately one seventh of its intake, due to evaporative losses, recycling water through the cooling towers (expected up to approximately seven cycles), and reuse.

As already described, water recovered from the ZLD is sent back to the gasification process area.

#### 2.1.1.3 Stormwater Use and Management

IG has designed a stormwater storage pond system capable of holding runoff from a 100-year storm event. This large-volume system (Basins A, B, C and D) will receive stormwater runoff from the gasification and other process areas and feedstock storage areas of the facility and will result in stormwater from these areas rarely being discharged. Because of IG's decision on this basin system design, stormwater runoff from solid material handling areas will not adversely impact the Ohio River.

For rainfall within a 100-year storm event, for the gasification stormwater retention area, stormwater will be routed to enclosed subsurface stormwater Basin A, where it will be captured and returned for use in the gasification process. For other process areas, as indicated on Form 2F, Attachment 2F-III, the first flush (1 inch) of stormwater will also be routed to Basin A and returned for use in the gasification process, and rainwater greater than 1 inch would discharge to perimeter outfalls. Stormwater from the feedstock storage area may be routed to Basins B, C, and D. If Basin B were to discharge, it would discharge to Basin C. If Basin C were to discharge, it would discharge to Basin D. If Basin D were to discharge, it will discharge to Outfall 4. Therefore, IG has limited its impact to the Ohio River by reducing its intake and not discharging most stormwaters falling on process areas.

## 3.0 Antidegradation Requirements

The current antidegradation standard for Indiana surface waters outside of the Great Lakes System is found at 327 IAC 2-1-2(2) and states:

> **327 IAC 2-1-2 Maintenance of surface water quality standards**
>
> Sec. 2. The following policies of nondegradation are applicable to all surface waters of the state:
>
> ...
>
> (2) All waters whose existing quality exceeds the standards established herein as of February 17, 1977, shall be maintained in their present high quality unless and until it is affirmatively demonstrated to the commissioner that limited degradation of such waters is justifiable on the basis of necessary economic or social factors and will not interfere with or become injurious to any beneficial uses made of, or presently possible, in such waters. In making a final determination under this subdivision, the commissioner shall give appropriate consideration to public participation and intergovernmental coordination.
>
> ....

327 IAC 2-1-2. There are currently no rules or nonrule policy documents to guide sources in implementing this requirement. The lack of rules or guidance leaves many questions unanswered. For example:

- *What waters meet the description in the rule and therefore must "be maintained in their present high quality"?* The rule provides no guidance on how to determine which waters are covered by the rule. The term "high quality waters" is specifically addressed in rules applicable to surface waters within the Great Lakes System. However, because the Ohio River is not in the Great Lakes System, there are no additional antidegradation rules or guidance which would be directly applicable to IG's discharge.
- *What is "limited degradation"?* Again, this term is not defined.
- *What must be included in an antidegradation demonstration?* Assuming such a demonstration is determined to be necessary, Indiana's rules applicable to the Great Lakes System contain requirements for the antidegradation demonstration, but there are no such rules for dischargers outside this system.

### 3.1 New Antidegradation Implementation Rules

The lack of certainty under the current rule makes it difficult to determine whether an anti-degradation demonstration is required and how it should be satisfied. As a result, IDEM has drafted proposed rules to implement the antidegradation requirements in areas outside of the Great Lakes System. These rules were preliminarily adopted by the Water Pollution Control Board on September 14, 2011 (hereafter, "Proposed Rules" or "Proposed 327 IAC 2-1.3 et seq."), and are anticipated to be considered for final adoption in 2012. If finally adopted, they would be filed with the Legislative Services Agency and become effective 30 days later. For dischargers outside the Great Lakes System, the Proposed Rules set out a detailed and quantitative process for determining degradation and conducting different levels of demonstration. As such, they offer a more robust framework within which to carry out the antidegradation analysis. Because of the uncertainty surrounding implementation of the current standard, and because the Proposed Rules are an indication of what IDEM considers to be necessary to an antidegradation showing, contain brightline standards, and have been made available for public comment (and revised to address those comments), IG believes that an appropriate approach to satisfy the antidegradation standard in 327 IAC 2-1-2(2) is to analyze its discharge by focusing on the relevant elements of the Proposed Rules.

The draft rule applies to "a proposed new or increased loading of a regulated pollutant to a surface water of the state that will result from a deliberate action…." Draft 327 IAC 2-1.3-1. The antidegradation standards have been separated into four tiers. The two highest tiers address outstanding national resource waters (ONRW) and outstanding state resource waters (OSRW). To be an ONRW or OSRW requires designation by the WPCB or the general assembly – the Ohio River has not been so designated. The antidegradation standards for the two lower tiers are as follows:

> (a) The Tier 1 antidegradation standard is as follows:
> (1) For all surface waters of the state, existing uses and the level of water quality necessary to protect existing uses shall be maintained and protected. To ensure this standard is met, the commissioner shall do the following:

(A) Ensure that the level of water quality necessary to protect existing uses is maintained. In order to achieve this requirement, water quality standards use designations must include all existing uses.
(B) Establish controls as necessary on nonpoint sources, where authority exists, and point sources of regulated pollutants to ensure the following:
(i) The criteria applicable to the designated use are achieved in the water.
(ii) Any designated use of a downstream water is maintained and protected.

(2) Where designated uses of waters are impaired:
(A) there shall be no additional lowering of the water quality with respect to the regulated pollutants that are causing the impairment; and
(B) to ensure the standard under clause (A) is met, the commissioner shall not allow a lowering of water quality for the regulated pollutants that prevents the attainment of the:
(i) designated use; or
(ii) water quality criterion.

(b) The Tier 2 antidegradation standard for [high quality waters, or] HQWs that are not ONRWs or OSRWs is as follows:
(1) The surface waters of the state where existing quality for any parameter is better than the water quality criterion for that parameter established in 327 IAC 2-1-6 or 327 IAC 2-1.5-8 shall be considered high quality for that parameter consistent with the definition of HQW.
(2) This high quality of water shall be maintained and protected unless the commissioner finds, after full satisfaction of intergovernmental coordination and public participation and the provisions in section 5 of this rule, that allowing a significant lowering of water quality is necessary and provides important economic or social development in the area in which the surface waters are located. In allowing a significant lowering of water quality, the commissioner shall assure the following:
(A) Water quality adequate to fully protect existing uses is maintained.
(B) The highest statutory and regulatory requirements for all new and existing point sources are applied.
(C) Where authority exists, all cost-effective and reasonable BMPs for nonpoint source control are employed.

* * * *

Draft 327 IAC 2-1.3-3. An antidegradation demonstration is required under the Tier 2 standard only when a "significant lowering of water quality" of a "high quality water" occurs. "High quality water" is defined as:

"High quality water" or "HQW" means a waterbody, including an ONRW or OSRW, in which, on a pollutant by pollutant basis, the quality of the surface

> water exceeds levels necessary to support propagation of fish, shellfish, and wildlife and recreation in and on the water. The term includes any waterbody for which the pollutant has not been detected in:
>
> (A) the water column; or
>
> (B) nontransient aquatic organisms;
>
> at levels that would indicate that a water quality criterion is not being met.

Draft 327 IAC 2-1.3-2(24).

A "significant lowering of water quality" is defined as:

> "Significant lowering of water quality" means:
>
> (A) there is a new or increased loading of a regulated pollutant to a surface water of the state that results in an increase in the ambient concentration of the regulated pollutant and the increased loading is greater than a de minimis lowering of water quality; and
>
> (B) none of the provisions of section 4 of this rule applies.

Draft 327 IAC 2-1.3-2(50). The terms "ambient concentration" and "de minimis" are not defined. However, the "de minimis" concept is set out in Section 4 – the exemptions section – of the Proposed Rules.

Section 4 contains exemptions from the requirement to make an antidegradation demonstration. Several exemptions are specific to waters in the Great Lakes basin or existing dischargers, but the relevant exemption, which does not apply to bioaccumulative chemicals of concern (BCCs), is as follows:

> * * * *
>
> (c) For an HQW except an ONRW, a new or increased loading of a regulated pollutant resulting from the following is exempt from the antidegradation demonstration requirements included in section 5 of this rule:
>
> (1) A new or increased loading of a non-BCC that is a demonstrated de minimis lowering of water quality as shown by the submission of sufficient information that allows the commissioner to verify the de minimis as determined according to the following:
>
> (A) Calculation considerations according to the following:
>
> (i) The proposed net increase in the loading of a regulated pollutant is less than or equal to ten percent (10%) of the available loading capacity determined at the time of the specific proposed new or increased loading of the regulated pollutant. The available loading capacity shall be established at the time of each request for a new or increased loading of a regulated pollutant.
>
> (ii) The benchmark available loading capacity is equal to ninety percent (90%) of the available loading capacity established at the time of the request for the initial increase in the loading of a regulated pollutant.

(iii) For every request after the time of the request for the initial increase in the loading of a regulated pollutant, the available loading capacity remaining after the net increase in the loading of a regulated pollutant must be greater than or equal to the benchmark available loading capacity.

(B) For heat, except for discharges to Lake Michigan, the following conditions must be satisfied:

(i) The new or increased discharge will not result in an increase in temperature in a stream or an inland lake, outside of the designated mixing zone, where applicable.

(ii) The new or increased discharge will not result in an increase in waste heat of an amount in a stream greater than the amount determined by calculating the number of British thermal units (BTUs) required to raise the temperature of the stream design flow of the receiving stream by one (1) degree Fahrenheit.

* * * *

Draft 327 IAC 2-1.3-4. This exemption contains defined terms which allow a discharger to calculate whether the proposed net increase in the loading of a regulated pollutant is less than or equal to ten percent (10%) of the available loading capacity of the receiving stream. As described in more detail below, under the proposed rules, IG's discharge would be considered a de minimis impact on the Ohio River.

## 4.0 IG's Discharge Will Not Cause Limited Degradation of Water Quality

As explained above, IG has included many elements in the facility's design which reduce its impact on the Ohio River, including the ZLD and 100-year stormwater storage pond, the use of some stormwaters in place of some intake from the Ohio River, and the reuse and recycling of water in several areas. As a result, IG's discharge should not be determined to cause limited degradation of water quality that would require any affirmative demonstration justifying the discharge under 327 IAC 2-1-2(2).

An analysis of IG's effluent under the draft antidegradation rules bears this out; under the proposed rules, IG's discharge of non-bioaccumulative chemicals of concern would be considered de minimis and exempt from the antidegradation demonstration requirements under Draft 327 IAC 2-1.3-4(c)(1). IG believes its discharge of mercury – a BCC – would also be considered de minimis and therefore not a significant lowering of water quality requiring a demonstration under the rule.

### 4.1 The De Minimis Analysis

IG has calculated its impact on the available loading capacity of the Ohio River consistent with Draft Rule 327 IAC 4. These calculations (De Minimis Calculations) are found at Attachment B.

The notes in the De Minimis Calculations describe the calculated values in greater detail, but generally, the de minimis calculation compares, on a pollutant-by-pollutant basis, the proposed loading of pollutants in the facility's discharge to the available loading capacity of the receiving

stream. The available loading capacity is expressed on a mass basis per 24 hours, and is the difference between the total loading capacity of the waterbody and the used loading capacity. In this case, the used loading capacity is the background concentration of the relevant pollutants in the Ohio River in the vicinity of the discharge. IG utilized background concentration data provided by IDEM for all substances except boron and total chromium.[1] For these two substances, IG derived background concentrations from available sampling data.[2] IG next converted this concentration data into mass loading rates per 24 hours.[3] This calculation creates a picture of the amount of these pollutants in the ambient river environment.

IG next calculated the total loading capacity by converting the applicable concentration-based water quality criteria from 327 IAC 2-1-6 into mass loading rates per 24 hours. By subtracting the used loading capacity, or what is already in the river, from the total loading capacity, IG calculated the loading that is available while still meeting Indiana's water quality standards. The Proposed Rules allow a potential discharger to determine a waterbody's capacity for additional pollutants while still meeting Indiana's water quality standards.

To determine the impact of a proposed discharge on the receiving stream in terms of a percent available loading capacity, the proposed net increase is divided by the available loading capacity. Under draft 327 IAC 2-1.3-4(c)(1), if the proposed net increase in the loading of a regulated pollutant is less than or equal to 10% of the available loading capacity established at the time of the request for a new loading, the new loading is exempt from the antidegradation demonstration otherwise required in draft 327 IAC 2-1.3-5.[4]

The project's estimated effluent characteristics are based on plant design. As shown in the De Minimis Calculations, using a nominal 10,000 gallon per minute intake, none of the calculated proposed increased pollutant loadings exceed even 0.2% of the available loading capacity. Because the draft antidegradation rule has been subjected to public review and comment (even being revised as a result) and has also been preliminarily adopted by the Water Pollution Control Board, IG feels that a showing that its proposed discharge is de minimis using the calculation methods required by the draft rule is a reasonable indicator – under both the current and proposed regulatory frameworks – that its discharge will not significantly lower water quality in the Ohio River.

---

[1] Indiana Department of Environmental Management, WLA Report for the Proposed Rockport-Gasification Plant, Spencer County (April 3, 2009).

[2] Background data for boron is taken from U.S. Geological Service sampling at Cannelton from October 2008 to September 2009. Total chromium data is taken from Ohio River Sanitation Commission data for Cannelton and Newburgh, based on sampling from February 2009 to November 2009. The IG intake and outfall are located in the Newburgh pool, while the Cannelton pool is the next pool upstream.

[3] To calculate a mass loading rate, a flow or volume of the receiving stream is needed. IG used the 7-day, 10-year low flow of the Ohio River when determining the percent available loading capacity.

[4] In order to qualify as de minimis, Draft 327 IAC 2-1.3-4(c)(1)(B) also dictates that the proposed discharge meet certain requirements regarding heat, which IG's proposed discharge will satisfy.

That this effluent would be exempt as de minimis is consistent with the fact that the substances in IG's effluent were already in the river water at IG's intake – because IG will not discharge process water, IG is largely discharging the same substances it took in from the river.[5] However, IG's de minimis calculations do *not* account for the fact that the constituents in its effluent were already present in the intake flow. That is, the "proposed increase in loading" calculated by IG does not subtract out the mass of these substances that are in the intake water, meaning that the "proposed increase" is not all new pollution mass being added to the river, and the true impact of IG's facility on the available loading capacity of the Ohio River is even smaller than the tiny calculated increases of mass.

#### 4.1.1 Mercury

It should be noted that the exemption in Draft 327 IAC 2-1.3-4(c)(1) would apply only to non-BCCs and discharges of mercury would need to be analyzed differently. As with the other substances in IG's discharge, the mercury calculated to be discharged is primarily originating from river water at IG's intake and is presented in Attachment A. IG will engineer and operate its water management and resulting discharge to assure that there will be no additional lowering of the water quality with respect to mercury and the resulting discharge will not prevent attainment of the designated uses in this reach of the Ohio River.

## 5.0 The Proposed Project Accommodates Important Social or Economic Development

In the event that an affirmative demonstration is determined to be required justifying any limited degradation under 327 IAC 2-1-2(2), IG is taking the opportunity to describe the necessary economic and social factors associated with the project.

### 5.1 Evaluation of Alternative or Enhanced Treatment Techniques

As illustrated by the de minimis nature of IG's impact on the Ohio River, the project already proposes to use enhanced treatment techniques that reduce impacts resulting from the discharge. Because IG is treating all gasification process water in a ZLD, IG's discharges are limited to non-process streams that are composed of treated, concentrated Ohio River water containing approximately the same mass of substances as what was present at the intake. Further, IG's design for stormwater handling allows certain runoff to be captured and used as process water.

### 5.2 Potential Impact of the De Minimis Degradation on Aquatic Community Structure and Function Is Negligible

The impact of the de minimis levels of degradation on the Ohio River's aquatic community will be insignificant if not imperceptible. The anticipated effluent from the facility will comply with all water quality-based effluent limitations for applicable water quality criteria based on protection of a well-balanced aquatic community. This assures that the proposed discharge will not interfere with or adversely affect the aquatic community.

---

[5] As described above, IG will discharge small amount of treatment chemicals. This discharge is addressed through IDEM's water treatment additives analysis.

Also, the mass of substances in IG's effluent is essentially the same as or less than the mass of these substances at IG's intake. This observation supports a conclusion that the discharge will generally have a minimal impact on existing ambient quality in the river.

Regarding the water treatment additives (WTAs) used by the facility, IDEM conducts an analysis to ensure that a facility's use of specific WTAs will be protective of the receiving stream.

### 5.3 Potential Impact of the De Minimis Degradation on Human Health Is Negligible

Because no process water will be discharged, no substances projected to be discharged from the facility will be discharged at greater than de minimis levels and the mercury in the discharge will be only what was taken up from the river at the intake, the potential for impact on human health is also negligible. The anticipated effluent from the facility will comply with all water quality-based effluent limitations, which are developed by IDEM to meet aquatic life, human non-cancer, and human cancer-based water quality criteria, as applicable. Also, as described above, the WTA analysis ensures no impact from the use of WTAs by the facility.

### 5.4 Project Will Support Important Economic or Social Development

While it is not possible to foresee the exact impact this project will have on the economic and social development in the area, the construction and operation of the IG facility – a multi-billion dollar project – is anticipated to provide substantial economic benefit to local economies in Spencer County and surrounding areas. The IG project has local project support from Spencer County and its economic development team.

#### 5.4.1 Projected Employment Gains

Substantial short-term economic benefits are anticipated to result from construction of the IG facility. Overall capital cost is currently projected at $2.5 billion, representing a substantial development project in Indiana. Construction is forecast to occur over a period of three years, and IG expects to employ up to 1,000 construction workers during peak construction periods. According to Bureau of Labor Statistics May 2010 State Occupational Employment and Wage Estimates for Indiana, the mean annual wage for construction and extraction occupations is $44,750. Therefore, these jobs have the potential to produce total annual wages of approximately $44.7 million during the construction phase.

Once constructed, the project is expected to employ approximately 200 people at an anticipated average annual compensation of over $70,000, with total wages projected at about $14 million annually. The addition of these jobs is especially significant in light of the 9% annual unemployment rate for Spencer County. STATS Indiana, Indiana IN Depth Profile for Spencer County Indiana, available at:
http://www.stats.indiana.edu/profiles/profiles.asp?scope_choice=a&county_changer=18147, accessed January 4, 2012 (Attachment C). Further, increased levels of highly trained workers in the area will make Spencer County and surrounding areas even more attractive for future economic development.

While the population of Spencer County has grown slightly in the past decade (2.8%), the county's population is projected to decrease by approximately 600 individuals by 2015 (See, Attachment C). Therefore, the potential for approximately 1,000 construction jobs and 200 permanent jobs at the IG facility could represent a significant employment boost to the area.

Table 5-1 provides a list of top 10 employers in Spencer County. The largest employer, measured by total employees, in Spencer County is Holiday World/Splashing' Safari which has 1,400 seasonal and 75 full time employees. The largest employer, when measured by full-time employees, is Kimball International with 500 employees.

**Table 5-1. Top 10 Employers in Spencer County**

| Business Name | Product/Service | Employees |
|---|---|---|
| Holiday World/Splashing' Safari | Theme/Water Park | 1,400 Seasonal/ 75 Full Time |
| Kimball International | TV Cabinets/Office Furniture | 500 |
| AK Steel Rockport Works | Carbon Stainless Flat Rolled Steel | 428 |
| Abbey Press | Offset Printing & Direct Marketing | 425 |
| Spencer Industries | Thermoformed Plastic Parts | 425 |
| AEP Power Plant | Electric Power | 285 |
| North Spencer School Corporation | K-12 Education | 265 |
| South Spencer School Corporation | K-12 Education | 225 |
| Foertsch Construction | Coal Mining | 180 |
| J. Winkler & Sons | Wholesale Grocery Distribution | 155 |

Source: Lincolnland Economic Development Corporation, http://www.ledc.org/business-info.html, accessed January 4, 2012 (Attachment D)

Based on these data, IG's projected workforce will rank in the top ten employers in Spencer County, demonstrating the significant impact on employment opportunities created by the development of the facility. These jobs could also lead to a substantial increase in the availability of other employment opportunities in the region, including home construction, retail, services and others.

### 5.4.2 Projected Increase in Per Capita Incomes

In contrast to the projected average annual compensation of $70,000 for IG facility employees, in 2009, the average annual per capita income in Spencer County was $33,169, and the median household income was $49,006 (See, Attachment C). Thus, the IG facility is expected to offer quality jobs with higher-than-average wages for the area.

## 6.0 Conclusions

The information provided above allows the following conclusions to be made:

1) The treatment technologies that IG has designed into the project result in no more than de minimis levels of degradation for all non-BCCs. With respect to mercury, the project will result in no additional lowering of the water quality. As a result, the projected effluent from the IG facility will meet all water quality-based effluent limits, will not cause limited degradation of water quality, and will not interfere with or become injurious to any beneficial uses made of, or presently possible, in the Ohio River downstream of the facility;

2) To the extent that it is determined that limited degradation is expected to occur, such limited degradation is both necessary to and justified by the economic or social development in the area of the project and in the State of Indiana resulting from construction and operation of the IG facility.

IG appreciates this opportunity to describe its wastewater design and its minimal impact on the Ohio River, and respectfully requests approval of this Antidegradation Analysis and Demonstration.

| A | B | C | D |
|---|---|---|---|
| **Pollutant (IDEM WLA Analysis)** | **Ambient Upstream Conc. (ug/L) (IDEM WLA Analysis)[1]** | **Loading in Intake (lb/day)** | **Loading in Effluent - (lb/day)** |
| Arsenic III | 1.1 | 0.1322 | 0.1304 |
| Cadmium | 0.1 | 0.0120 | 0.0092 |
| Chromium III | 2 | 0.2404 | 0.2369 |
| Chromium VI | 0 | 0.0000 | - |
| Total Chromium | 2.1 | 0.2524 | 0.2460 |
| Cobalt | 0 | 0.0000 | - |
| Copper | 3.3 | 0.3966 | 0.3929 |
| Iron | 1255 | 150.8276 | 149.1338 |
| Lead | 1.4 | 0.1683 | 0.1671 |
| Nickel | 3.7 | 0.4447 | 0.4370 |
| Selenium | 0.6 | 0.0721 | 0.0716 |
| Zinc | 8.4 | 1.0095 | 1.0025 |
| Total Ammonia (as N) | | | |
| Summer | 50 | 6.0091 | 5.8755 |
| Winter | 90 | 10.8163 | 10.6494 |
| Boron | 141 | 16.9456 | 16.7085 |
| Chlorides | 24000 | 2884.3517 | 2852.0196 |
| Cyanide, Free | 0 | 0.0000 | - |
| Nitrate-N + Nitrite-N | 1240 | 149.0248 | 147.4391 |
| Sulfate | 59400 | 7138.7704 | 15505.3432 |
| TDS | 352000 | 42303.8246 | 35800.3460 |
| | | | |
| | | | |
| | | | |
| **BCCs** | | | |
| Mercury | 0.0045 | 0.000512 | 0.000487 |
| | | | |
| | | | |
| **Intake Flow (gpd)** | 14400000 | | |
| **Effluent Flow (gpd)** | 2200000 | | |
| | | | |
| Loading in Intake: | Ambient Upstream Conc. * Intake Flow | | |
| Loading in Effluent: | Estimated effluent characteristic, based on plant design and Ambient Upstream Concentrations provided in Column B * Effluent Flow | | |

[1]Generally, ambient data is from IDEM's 2009 WLA, but background data for boron is taken from U.S. Geological Service sampling at Cannelton from October 2008 to September 2009, and total chromium data is taken from Ohio River Sanitation Commission data for Cannelton and Newburgh, based on sampling from February 2009 to November 2009. The IG intake and outfall are located in the Newburgh pool, while the Cannelton pool is the next pool upstream.

| A | B | C | D | E | F | G | H | I |
|---|---|---|---|---|---|---|---|---|
| **Pollutant (IDEM WLA Analysis)** | **Ambient Upstream Conc. (ug/L) (IDEM WLA Analysis)[1]** | **Background Loading Rate (lb/day)** | **Used Loading Capacity (lb/day)** | **Applicable WQ Criterion (ug/L)** | **Total Loading Capacity (lb/day)** | **Available Loading Capacity (lb/day)** | **Proposed increase in loading (lb/day)** | **% Available Loading Capacity** |
| Arsenic III | 1.1 | 65.2827 | 65.2827 | 340 | 20184.5195 | 20119.2368 | 0.1304 | 0.0006% |
| Cadmium | 0.1 | 5.9348 | 5.9348 | 5.83 | 346.1051 | 340.1704 | 0.0092 | 0.0027% |
| Chromium III | 2 | 118.6957 | 118.6957 | 773 | 45890.0987 | 45771.4029 | 0.2369 | 0.0005% |
| Chromium VI | 0 | 0.0000 | 0.0000 | 15.71 | 932.6435 | 932.6435 | 0.2460 | 0.0264% |
| Total Chromium | 2.1 | 124.6305 | 124.6305 | - | - | - | 0.2460 | - |
| Cobalt | 0 | 0.0000 | 0.0000 | - | - | - | - | - |
| Copper | 3.3 | 195.8480 | 195.8480 | 19.94 | 1183.7627 | 987.9147 | 0.3929 | 0.0398% |
| Iron | 1255 | 74481.5802 | 74481.5802 | 2744 | 162900.9453 | 88419.3651 | 149.1338 | 0.1687% |
| Lead | 1.4 | 83.0870 | 83.0870 | 101.56 | 6029.2347 | 5946.1477 | 0.1671 | 0.0028% |
| Nickel | 3.7 | 219.5871 | 219.5871 | 667.27 | 39613.3068 | 39393.7196 | 0.4370 | 0.0011% |
| Selenium | 0.6 | 35.6087 | 35.6087 | 130 | 7717.6104 | 7682.0017 | 0.0716 | 0.0009% |
| Zinc | 8.4 | 498.5221 | 498.5221 | 163.19 | 9687.9757 | 9189.4535 | 1.0025 | 0.0109% |
| Total Ammonia (as N) | | | | | | | | |
| Summer | 50 | 2967.3936 | 2967.3936 | 12138.81 | 720635.4314 | 717668.0378 | 5.8755 | 0.0008% |
| Winter | 90 | 5341.3085 | 5341.3085 | 12138.81 | 720635.4314 | 715294.1229 | 10.6494 | 0.0015% |
| Boron | 141 | 8368.0500 | 8368.0500 | 30000 | 1780987.0113 | 1772618.9613 | 16.7085 | 0.0009% |
| Chlorides | 24000 | 1424348.9442 | 1424348.9442 | 860000 | 51054960.9906 | 49630612.0464 | 2852.0196 | 0.0057% |
| Cyanide, Free | 0 | 0.0000 | 0.0000 | 22 | 1306.0571 | 1306.0571 | - | - |
| Nitrate-N + Nitrite-N | 1240 | 73591.3621 | 73591.3621 | 10000 | 593662.3371 | 520070.9750 | 147.4391 | 0.0283% |
| Sulfate | 59400 | 3525263.6369 | 3525263.6369 | 250000 | 14841558.4275 | 11316294.7906 | 15505.3432 | 0.1370% |
| TDS | 352000 | 20890451.1816 | 20890451.1816 | 750000 | 44524675.2825 | 23634224.1009 | 35800.3460 | 0.1515% |
| | | | | | | | | |
| | | | | | | | | |
| **Receiving Stream Design Flow (gpd)** | 7111000000 | | | | | | | |
| **Effluent Flow (gpd)** | 2200000 | | | | | | | |
| | | | | | | | | |
| | | | | Concentration (ug/L) to Mass Loading Rate (lb/day): | | | | |
| | | | | Pollutant concentration (ug/L) * Flow (gal/day) * (3.785 L/day) * (0.000001g/ug) * (0.002205 lb/g) = loading in lb/day | | | | |
| Background Loading Rate: | Ambient Upstream Conc. * Stream Design Flow | | | | | | | |
| Used Loading Capacity: | Background Loading Rate + Monthly Avg Mass-Based Effluent Limitation Contained in Facility's Existing Permit (0 for IG) | | | | | | | |
| Total Loading Capacity: | Applicable WQ Criterion * (Proposed New Effluent Flow + Stream Design Flow) | | | | | | | |
| Available Loading Capacity: | Total Loading Capacity - Used Loading Capacity | | | | | | | |
| % Avail Loading Capacity: | Proposed Increase / Available Loading Capacity | | | | | | | |
| Proposed Increase in Loading: | Estimated effluent characteristic, based on plant design and Ambient Upstream Concentrations provided in Column B * Effluent Flow | | | | | | | |

[1]Generally, ambient data is from IDEM's 2009 WLA, but background data for boron is taken from U.S. Geological Service sampling at Cannelton from October 2008 to September 2009, and total chromium data is taken from Ohio River Sanitation Commission data for Cannelton and Newburgh, based on sampling from February 2009 to November 2009. The IG intake and outfall are located in the Newburgh pool, while the Cannelton pool is the next pool upstream.

STATS Indiana
data everyone can use

**Major government finance data released**
Local government budgeted spending for 2012 is now available in our new companion site, **Gateway**.



Indiana INDEPTH profile

Choose one of the following geographies and click go to view its profile:
County: Spencer Go
Region: EGR 1
GO
**Create a profile for a custom region**

# Spencer County, Indiana

### Named for Battle of Tippecanoe hero Spier Spencer

**County Seat:** Rockport
**Largest City:** Santa Claus (2010 population: 2,481)
**Population per Square Mile:** 52.55
**Square Miles:** 398.70
**Go to county's in.gov site**

| Population over Time | Number | Rank in State | Percent of State | Indiana |
|---|---|---|---|---|
| Yesterday (2000) | 20,391 | 72 | 0.3% | 6,080,485 |
| Today (2010) | 20,952 | 71 | 0.3% | 6,483,802 |
| Tomorrow (2015 projection)* | 20,355 | 73 | 0.3% | 6,581,875 |
| Percent Change 2000 to Today | 2.8% | 40 | | 6.6% |

*Projection based on 2005 population estimate.
Sources: **U.S. Census Bureau**; **Indiana Business Research Center**

| Components of Population Change, 2008-2009 | Number | Rank in State | Percent of State | Indiana |
|---|---|---|---|---|
| Net Domestic Migration | -53 | 35 | | -6,805 |
| Net International Migration | 15 | 48 | | 9,194 |
| Natural Increase (births minus deaths) | 35 | 66 | 0.1% | 32,591 |

Source: **U.S. Census Bureau**

| Population Estimates by Age, 2010 | Number | Rank in State | Pct Dist. in County | Pct Dist. in State |
|---|---|---|---|---|
| Preschool (0 to 4) | 1,229 | 70 | 5.9% | 6.7% |
| School Age (5 to 17) | 3,834 | 69 | 18.3% | 18.1% |
| College Age (18 to 24) | 1,417 | 76 | 6.8% | 10.0% |
| Young Adult (25 to 44) | 4,878 | 72 | 23.3% | 25.7% |
| Older Adult (45 to 64) | 6,449 | 69 | 30.8% | 26.5% |
| Seniors (65 and older) | 3,145 | 73 | 15.0% | 13.0% |
| Median Age | 41.9 | | | Median Age = 37.0 |

Sources: **U.S. Census Bureau**; **Indiana Business Research Center**

| Population Estimates by Race and Hispanic Origin, 2010 | Number | Rank of | Pct Dist. in County | Pct Dist. in State |
|---|---|---|---|---|
| American Indian or Alaska Native Alone | 41 | 73 | 0.2% | 0.3% |
| Asian Alone | 72 | 63 | 0.3% | 1.6% |
| Black Alone | 96 | 64 | 0.5% | 9.1% |
| Native Hawaiian and Other Pac. Isl. Alone | 0 | 86 | 0.0% | 0.0% |
| White | 20,295 | 70 | 96.9% | 84.3% |
| Two or More Race Groups | 166 | 76 | 0.8% | 2.0% |
| **Hispanic or Latino Origin (can be of any race)** | | | | |
| Non-Hispanic | 20,435 | 71 | 97.5% | 94.0% |
| Hispanic | 517 | 60 | 2.5% | 6.0% |

Source: **U.S. Census Bureau**

| Household Types | Number | Rank in State | Pct Dist. in County | Pct Dist. in State |
|---|---|---|---|---|
| Households in 2010 (Includes detail not shown below) | 8,082 | 71 | 100.0% | 100.0% |
| Married With Children | 1,920 | 64 | 23.8% | 19.9% |
| Married Without Children | 2,995 | 69 | 37.1% | 29.7% |
| Single Parents | 547 | 78 | 6.8% | 10.0% |
| Living Alone | 1,873 | 74 | 23.2% | 26.9% |

Source: **U.S. Census Bureau, American Community Survey 2005-2009 5 year estimates.**

| Housing | Number | Rank in State | Pct Dist. in County | Pct Dist. in State |
|---|---|---|---|---|
| Total Housing Units in 2009 (estimate) | 9,180 | 73 | 100.0% | 100.0% |
| Total Housing Units in 2010 (includes vacant units) | 8,872 | 74 | 100.0% | 100.0% |
| Owner Occupied (Pct. distribution based on all housing units) | 6,609 | 69 | 74.5% | 62.5% |
| Median Value (2010) | $111,600 | 45 | | |
| Renter Occupied (Pct. distribution based on all housing units) | 1,473 | 78 | 16.6% | 27.0% |
| Median Rent (2010) | $364 | 86 | | |

Source: **U.S. Census Bureau, American Community Survey 2005-2009 5 year estimates.**

| Education | Number | Rank in State | Percent of State | Indiana |
|---|---|---|---|---|

| | | | | |
|---|---|---|---|---|
| School Enrollment (2010/2011 Total Reported) | 3,625 | 68 | 0.3% | 1,122,909 |
| Public | 3,524 | 68 | 0.3% | 1,046,556 |
| Adults (25+ in 2010 ACS) | 14,488 | 70 | 0.3% | 4,165,617 |
| with High School diploma or higher | 85.7% | 39 | | 86.2% |
| with B.A. or higher degree | 15.9% | 37 | | 22.4% |

Sources: **Indiana Department of Education**; **U.S. Census Bureau, American Community Survey 2005-2009 5 year estimates.**

| Income and Poverty | Number | Rank in State | Percent of State | Indiana |
|---|---|---|---|---|
| Per Capita Personal Income (annual) in 2009 | $33,169 | 29 | 97.5% | 34,022 |
| Median Household Income in 2009 | 49,006 | 20 | 107.9% | $45,427 |
| Poverty Rate in 2009 | 10.0% | 72 | 69.4% | 14.4% |
| Poverty Rate among Children under 18 | 13.9% | 75 | 69.8% | 19.9% |
| Welfare (TANF) Monthly Average Families in 2010 | 44 | 80 | 0.1% | 30,864 |
| Food Stamp Recipients in 2010 | 1,768 | 80 | 0.2% | 829,907 |
| Free and Reduced Fee Lunch Recipients in 2011 | 1,204 | 76 | 0.2% | 488,964 |

Sources: **U.S. Bureau of Economic Analysis**; **U.S. Census Bureau**; **Indiana Family Social Services Administration**; **Indiana Department of Education**

| Health and Vital Statistics | Number | Rank of | Percent of State | Indiana |
|---|---|---|---|---|
| Births, 2008 | 245 | 71 | 0.3% | 88,679 |
| Births to Teens, 2008 | 22 | 75 | 0.2% | 9,715 |
| Deaths, 2007 | 175 | 76 | 0.3% | 53,882 |

Source: **Indiana State Department of Health**

| Labor Force, 2010 | Number | Rank in State | Percent of State | Indiana |
|---|---|---|---|---|
| Total Resident Labor Force | 10,321 | 69 | 0.3% | 3,142,265 |
| Employed | 9,396 | 68 | 0.3% | 2,822,693 |
| Unemployed | 925 | 75 | 0.3% | 319,572 |
| Annual Unemployment Rate | 9.0 | 75 | 88.2% | 10.2 |
| **November 2011 Unemployment Rate** | **7.5** | **48** | **86.2%** | **8.7** |

Source: **STATS Indiana**, using data from the Indiana Department of Workforce Development

| Employment and Earnings by Industry, 2009 | Employment | Pct Dist. in County | Earnings ($000) | Pct Dist. In County | Avg. Earnings Per Job |
|---|---|---|---|---|---|
| **Total by place of work** | 9,902 | 100.0% | $359,406 | 100.0% | $36,296 |
| **Wage and Salary** | 7,391 | 74.6% | $243,190 | 67.7% | $32,904 |
| **Farm Proprietors** | 550 | 5.6% | $13,511 | 3.8% | $24,565 |
| **Nonfarm Proprietors** | 1,961 | 19.8% | $37,197 | 10.3% | $18,968 |
| **Farm** | 637 | 6.4% | $16,337 | 4.5% | $25,647 |
| **Nonfarm** | 9,265 | 93.6% | $343,069 | 95.5% | $37,028 |
| **Private** | 8,112 | 81.9% | $293,945 | 81.8% | $36,236 |
| Accommodation, Food Serv. | Data not available due to BEA non-disclosure requirements. | | | | |
| Arts, Ent., Recreation | Data not available due to BEA non-disclosure requirements. | | | | |

| | | | | | |
|---|---|---|---|---|---|
| Construction | 560 | 5.7% | $20,015 | 5.6% | $35,741 |
| Health Care, Social Serv. | Data not available due to BEA non-disclosure requirements. | | | | |
| Information | 115 | 1.2% | $6,649 | 1.8% | $57,817 |
| Manufacturing | 1,153 | 11.6% | $70,518 | 19.6% | $61,160 |
| Professional, Tech. Serv. | Data not available due to BEA non-disclosure requirements. | | | | |
| Retail Trade | 692 | 7.0% | $13,373 | 3.7% | $19,325 |
| Trans., Warehousing | Data not available due to BEA non-disclosure requirements. | | | | |
| Wholesale Trade | 528 | 5.3% | $24,596 | 6.8% | $46,583 |
| Other Private (not above) | 1,930* | 19.5%* | $50,843* | 14.1%* | $26,344* |
| **Government** | 1,153 | 11.6% | $49,124 | 13.7% | $42,605 |

Source: **U.S. Bureau of Economic Analysis**

* These totals do not include county data that are not available due to BEA non-disclosure requirements.

| Residential Building Permits, 2010 | Units | Pct Dist. in County | Pct Dist. in State | Cost ($000) | State Cost ($000) |
|---|---|---|---|---|---|
| Total Permits Filed | 38 | 100.0% | 100.0% | $4,549 | $1,960,774 |
| Single-Family | 38 | 100.0% | 74.7% | $4,549 | $1,714,875 |
| 2-Family | 0 | 0.0% | 3.0% | 0 | $33,796 |
| 3- and 4-Family | 0 | 0.0% | 2.9% | $0 | $35,216 |
| 5+ Family | 0 | 0.0% | 19.4% | $0 | $176,887 |

Notes: Detail cost may not sum to total due to rounding. Greene County does not currently issue building permits, so it is excluded.

Source: **U.S. Census Bureau**

# Largest Cities and Towns in Spencer County

| Name | Population in 2010 | Percent of County |
|---|---|---|
| Chrisney | 481 | 2.4% |
| Dale | 1,593 | 8.0% |
| Gentryville | 268 | 1.4% |
| Grandview | 749 | 3.8% |
| Richland | 425 | 2.1% |
| Rockport | 2,270 | 11.5% |
| Santa Claus | 2,481 | 12.5% |

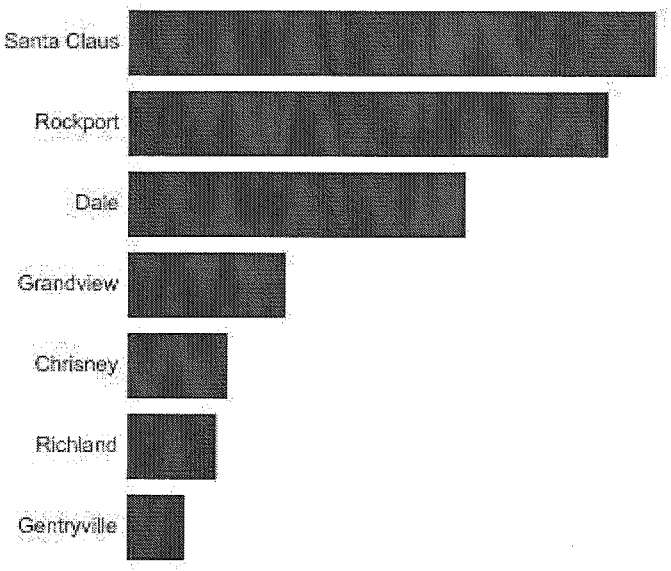

Home | About STATS | Sitemap | Report a problem with this page | Privacy Notice

Connect:

STATS Indiana is the statistical data utility for the State of Indiana, developed and maintained since 1985 by the **Indiana Business Research Center** at Indiana University's **Kelley School of Business**. Support is or has been provided by the State of Indiana and the Lilly Endowment, the Indiana Department of Workforce Development and Indiana University.

LINCOLNLAND
Economic Development Corporation 812-649-2119

Home
Where We Are
Facts & Figures
Business Information
• Business Climate
• Major Employers
• Business Programs
• Available Buildings and Sites
• Incentives
• Workforce Training Assistance
• Taxes
• Utilities
Buildings & Sites
Relocation Info/Links
Workforce/Jobs
News & Events
Contact Info
Tourism Info/Links
Links-Helpful Sites

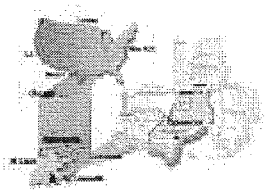

Lincolnland makes every effort to assist your business in succeeding and now provides some unique tools to help. Take a test drive of our business tools today by visiting this link.

# Lincolnland Economic Development Corporation and Spencer County Want Your Business!

Spencer County welcomes inquiries by corporations, site selectors and entrepreneurs. Lincolnland wants your business!

Lincolnland makes every effort to assist your business in succeeding and now provides some unique tools to help. Take a test drive of our business tools today by visiting this link.

**Business Climate**
Our commitment to the success of local businesses is demonstrated by the strong corporate and governmental partnerships that have resulted in new business programs, a tax system that keeps overall costs down and a regulatory environment that encourages growth.

**Major Employers**

| Firm | Product / Service | # Employed |
|---|---|---|
| Holiday World/Splashin' Safari | Theme Park/Water Park | 1,400 seasonal<br>75 full time |
| Kimball International/Heritage Division | TV cabinets & office furniture | 500 |
| AK Steel Rockport Works | Carbon stainless flat rolled steel | 428 |
| Abbey Press | Offset Printing & Direct Marketing | 425 |
| Spencer Industries | Therfoformed Plastic Parts | 425 |
| AEP Power Plant | Electric Power | 285 |
| North Spencer School Corporation | K-12 education | 265 |
| South Spencer School Corporation | K-12 education | 225 |
| Foertsch Construction | Coal Mining | 180 |
| J. Winkler & Sons | Wholesale Grocery Distribution | 155 |
| Spencer County | County Government | 150 |
| Thermwood Corporation | Computer controlled routers & trimming systems for woodworking, plastic & aerospace industries | 150 |
| Holiday Foods | Grocery Stores - warehousing & distribution | 109 |
| Buehlers' Buy Low | Grocery Stores - warehousing & distribution | 55 |
| Curtis-Maruyasu | | |

Find us on

| | | |
|---|---|---|
| America, Inc | Brake & Fuel Lines for Toyota | 54 |
| PSC | Telecommunications | 48 |
| Grandview Aluminum Products | Aluminum castings, sign, plaques & advertising specialties | 45 |
| Corn Island Shipyard | New barge construction & repair | 42 |
| Automated Routing | Millwork & plastic CNC routing | 35 |
| Spencer County Co-op | LP Gas Service | 30 |
| Spencer County Bank | Banking Services | 30 |
| Hooples Country Kitchen | Commercial Foods & Salads | 20 |
| Integra Bank | Banking Services | |

Back to top

**Incentives**
Financial benefits can be sought if you select Spencer County Indiana as the site for your next project. The LEDC will work with city and county officials, state government and utility providers to find those resources which fit your company's needs.

Once the details of your company's project are known, the LEDC will work to put together the best cost-savings plan available. The variety of incentives that may be utilized toward your project include:

*Research and Development Tax Credit*
Some Indiana businesses may claim a 10% credit on taxes for investment in research and development. This percentage will remain in effect until 2013.

*Tax Increment Financing*
Spencer County's TIF funds allow for continued infrastructure development, as well as new construction, property acquisition and training. The amount of revenue available is dependent on your company's investment. Tax-exempt or taxable bonds may be issued in support of the project. The bonds are then retired through property tax revenue generated by the project and/or the TIF district.

*Tax Abatement*
Tax Abatement in Spencer is offered in some instances. Prior to construction, a program is set up that will phase in the increase in property taxes that result from investments in industrial buildings, land, machinery and equipment. The gradual increase occurs over a span of up to 10 years.

*EDGE Tax Credit*
Your company may qualify for a state tax credit known as EDGE. This credit is based on payroll and allows individual income tax withholdings from company employees to be credited against the company's Indiana corporate income tax liability. Excess withholdings are refunded to the company. These credits can be awarded for up to 10 years.

*Hoosier Business Investment Tax Credit*
The State of Indiana offers a 30% credit on a qualified capital investment made by a taxpayer. Capital investments include purchase/upgrade manufacturing equipment, telecommunications equipment or computers. Also included is the construction of buildings for use in computer, software, biological sciences or telecommunications industries.

*Venture Capital Tax Credit*
Investors in Indiana businesses may be eligible for a tax credit equal to 20% of the investment. These credits are authorized by the Indiana Department of Commerce up to

$10 million per year.

*Biodiesel Tax Credit*
A tax credit of $1 per gallon is available for all biodiesel produced in Indiana and used to produce blended biodiesel. A tax credit of 2 cents per gallon is available on blended biodiesel produced in Indiana. Finally, a tax credit of 1 cent per gallon is available on blended biodiesel sold through a metered pump at a service station.

*Ethanol Tax Credit*
Indiana facilities that produce ethanol are eligible for a 1.25 cents per gallon tax credit.

*Aircraft Tax Credit*
Aircraft operated by a business entity that has its corporate headquarters in Indiana are exempt from the property tax. Also, property tax deductions are available to owners of aircraft used to transport people or property between a qualifying medium hub airport and at least two qualifying underserved airports.

*Interstate Inventory Tax Exemption*
Finished goods awaiting shipment to an out-of-state destination are usually exempt from inventory tax. Typically, the amount of the exemption is determined by applying the percentage of the location's total shipments to out-of-state destinations during the previous year.

*Lease-Financing for Capital Projects*
Available through the Ports of Indiana, corporations and developers with investment-grade credit that wish to expand may seek financing assistance. This assistance is available to qualified candidates regardless of their proximity to or usage of Indiana's ports.

*Training Cost Assistance*
Spencer County and the State of Indiana can both provide training dollars to help get your new or expanded facility staffed with a trained workforce. Grants for up to 50 percent of eligible training costs are available. Awards for retraining can reach up to $200,000. Also, up to 75 percent of related costs may be reimbursed for companies seeking to become QS-9000 certified.

*Infrastructure Improvements*
Grants and loans are available from the State of Indiana for infrastructure improvements such as funding for roads, rail spurs, water lines and sewer lines.

*21st Century Research and Technology Fund*
Businesses or individuals looking to develop or commercialize advance technologies can turn to the 21st Century Research and Technology Fund for assistance. Funds have been awarded in fields such as; bioengineering, life sciences, pharmaceutical science, agriculture, advanced manufacturing and information technology.

For additional information on any of the above incentive programs, please contact the Lincolnland Economic Development Department

*Additional Links of Interest:*
Indiana Economic Development Corporation– Tax Incentives and Credits
Indiana Economic Development Corporation– Programs and Initiatives

Back to top

**Spencer County Indiana's Assets Include:**

- Conscientious skilled workforce
- Business friendly communities
- An excellent, rewarding quality of life

- Location near the median center of US population
- Logistically excellent sites and buildings available
- The right location for your facility

©2010 Lincolnland Economic Development Corp. 2792 N US Hwy 231, Suite 300, Rockport, IN 47635, TEL: 812--649-2119, FAX: 812-649-2236, E-mail: lincoln@psci.net

**LINCOLNLAND ECONOMIC DEVELOPMENT CORPORATION MISSION STATEMENT: Promoting cooperative effort between citizens, businesses and government to foster planned, sustainable, responsible economic development and investment to improve opportunities for Spencer County and its people.**

# Appendix B

U.S. EPA Letter

UNITED STATES ENVIRONMENTAL PROTECTION AGENCY
REGION 5
77 WEST JACKSON BOULEVARD
CHICAGO, IL 60604-3590

IDEM
OFFICE OF
WATER QUALITY

JUL 12 2012

2012 JUL 16 A 11:56

REPLY TO THE ATTENTION OF:

WN-16J

Stan Rigney, Chief
Industrial NPDES Permits Section
Indiana Department of Environmental Management
Office of Water Quality, Mail Code 65-42
100 N. Senate Avenue
Indianapolis, Indiana 46204-2251

Re: U.S. Environmental Protection Agency Review of the pre-public notice draft NPDES Permit for the Indiana Gasification Rockport Station, Permit No. IN0063851

Dear Mr. Rigney:

The U.S. Environmental Protection Agency has reviewed the pre-public notice draft National Pollutant Discharge Elimination System Permit (Permit), fact sheet, and supporting documents for the Indiana Gasification Rockport Station that was submitted to EPA on May 9, 2012. Based on our review to date, EPA would not object to issuance of that permit.

EPA recommends that you consider and address the comments identified in Enclosure A in order to improve the clarity and accuracy of the permit, but would not object to those issues based upon our current review.

My staff has discussed the above comments with your staff and the permit can be issued in accordance with the Memorandum of Agreement and pursuant to the Clean Water Act.

However, our position could change if any of the following occurs:

a. Prior to the actual date of issuance of a Proposed Permit, an effluent guideline or standard is promulgated which is applicable to the permit and which would require revision or modification of a limitation or condition set forth in the Draft Permit;

b. A variance is granted and the Permit is modified to incorporate the results of that variance;

c. There are additional revisions to be incorporated into the Permit which have not been agreed to by EPA; or

d. EPA learns of new information, including as the result of public comments, that causes EPA to reconsider its position.

Recycled/Recyclable • Printed with Vegetable Oil Based Inks on 100% Recycled Paper (50% Postconsumer)

When the Proposed Permit is issued, please forward one copy and any significant comments received during any public notice period to this office at the above address, attention Sean Ramach, NPDES Programs Branch. If you have any technical questions related to EPA's review, please contact Sean Ramach of my staff by telephone at (312) 886-5284 or by email at ramach.sean@epa.gov.

Thank you for your cooperation during the review process and your thoughtful consideration of our comments.

Sincerely,

Kevin M. Pierard, Chief
NPDES Programs Branch

Enclosure

cc: Richard Hamblin, Environmental Engineer

**Enclosure A**
Additional comments and recommendations on the Indiana Gasification Rockport Station, Permit No. IN0063851by the U.S. Environmental Protection Agency.

A) Section 2.2 would be clearer if the receiving water bodies were identified with the outfalls and lat/longs.

B) Storm Water Comments on Indiana Gasification, LLC (Permit No. IN0063851)
Fact Sheet:

1. Pages 7 and 9 of the fact sheet state that the receiving streams for storm water discharges from Outfalls 002, 003 and 008 are roadside ditches. Please identify the ultimate receiving streams for these discharges.
2. The third paragraph on page 15 references a 1992 SWPPP guidance document. EPA has developed an updated SWPPP guidance document entitled *Developing Your Storm Water Pollution Prevention Plan – A Guide for Industrial Operators (EPA 833-B09-002), February 2009*. Please substitute the updated guidance information.

Permit:

1. The permit should list the ultimate receiving streams for Outfalls 002, 003 (page 6) and 008 (page 10).
2. In Part I.D.9.c, add the following to immediately after "Qualified personnel": "and at least one member of your Pollution Prevention Team".
3. Remove the second paragraph of Part I.D.9.c(1) and insert it as the second paragraph in Part I.D.9.a.
4. Delete "Comprehensive Site Compliance Inspection from Part I.D.9.c(2) and insert this after the one in comment 3 above (as the third paragraph in Part I.D.9.a .).

C) Two of the standard conditions do not appear to be included in the permit as specified in the federal regulations. They are the standard conditions for compliance schedules and anticipated non-compliance.

**STATE OF INDIANA**
**DEPARTMENT OF ENVIRONMENTAL MANAGEMENT**

**PUBLIC NOTICE NO. 2012 – 8G -F**

**DATE OF NOTICE: August 22, 2012**

For information about your rights and responsibilities pertaining to the Public Notice process and timeframes, please visit IDEM websites: **http://www.in.gov/idem/5474.htm and IDEM Citizen Guide: http://www.in.gov/idem/5803.htm.**

---

The Office of Water Quality issues the following **NEW MINOR INDUSTRIAL NPDES PERMIT:**

**INDIANA GASIFICATION LLC,** Permit No. IN0063851, SPENCER COUNTY, CR 200 N and Base Rd, Rockport, IN. This industrial facility will discharge 2.0 million gallons daily of non-process wastewater and variable amounts of stormwater runoff into the Ohio River. Permit Writer: Richard Hamblin at (317) 232-8696, or via email: rhamblin@idem.in.gov.

---

**APPEAL PROCEDURES FOR FINAL PERMITS**

The Final Permit is available for review & copies at IDEM/Office of Water Quality, IGCN 1255, 100 N Senate Ave, INDPLS, IN - from 9 – 4, M - F (copies 10¢ per page). To request an E mail copy, send to Damita Ivey at divey@idem.in.gov. You can obtain copies of the final permit, briefing memo, and associated documents at the following locations: on IDEM's website at http://www.in.gov/idem/5338.htm, at the IDEM Southwest Regional Office, the Spencer County Health Department, and the Spencer County Library. **Please tell others you think would be interested in this matter.** For your rights and responsibilities go to http://www.in.gov/idem/5474.htm; Citizen Guide: http://www.in.gov/idem/5803.htm.

**Appeal Procedure:** Any person affected by the issuance of the Final Permit may appeal by filing a Petition for Administrative Review with the Office of Environmental Adjudication **within** eighteen (18) days of the date of this Public Notice. Any appeal request must be filed in accordance with IC 4-21.5-3-7 and must include facts demonstrating that the party requesting appeal is the applicant; a person aggrieved or adversely affected or is otherwise entitled to review by law.

**Timely filing:** The Petition for Administrative Review must be received by the Office of Environmental Adjudication (OEA) **within** 18 days of the date of this Public Notice; either by U.S. Mail postmark or by private carrier with dated receipt. This Petition for Administrative Review represents a request for an Adjudicatory Hearing, therefore must:

- state the name and address of the person making the request;
- identify the interest of the person making the request;
- identify any persons represented by the person making the request;
- state specifically the reasons for the request;
- state specifically the issues proposed for consideration at the hearing;
- identify the Final Permit Rule terms and conditions which, in the judgment of the person making the request, would be appropriate to satisfy the requirements of the law governing this NPDES Permit rule.

If the person filing the Petition for Administrative Review desires any part of the NPDES Final Permit Rule to be stayed pending the outcome of the appeal, a Petition for Stay must be included in the appeal request, identifying those parts to be stayed. Both Petitions shall be mailed or delivered to the address here:
**Phone: 317/232-8591.**

Environmental Law Judge
Office of Environmental Adjudication
IGC – North Building- Rm 501
100 N. Senate Avenue
Indianapolis IN 46204

**Stay Time frame:** If the Petition (s) is filed **within** eighteen (18) days of the mailing of this Public Notice, the effective date of any part of the permit, within the scope of the Petition for Stay is suspended for fifteen (15) days. The Permit will become effective again upon expiration of the fifteen (15) days, unless or until an Environmental Law Judge stays the permit action in whole or in part.

**Hearing Notification:** Pursuant to Indiana Code, when a written request is submitted, the OEA will provide the petitioner or any person wanting notification, with the Notice of pre-hearing conferences, preliminary hearings, hearing stays or orders disposing of the Petition for Administrative Review. Petition for Administrative Review must be filed in compliance with the procedures and time frames outlined above. Procedural or scheduling questions should be directed to the OEA at the phone listed above.