National Pollutant Discharge Elimination System
FACT SHEET for
ArcelorMittal Steel USA Inc.
Indiana Harbor Long Carbon
October 2011

Indiana Department of Environmental Management

100 North Senate Avenue
Indianapolis, Indiana 46204
(317) 232-8603
Toll Free (800) 451-6027
www.idem.IN.gov

Permittee:	ArcelorMittal Steel USA Inc. Indiana Harbor Long Carbon (formerly Ispat Inland Steel Company) 3300 Dickey Road East Chicago, Lake County, IN 46312
Existing Permit Information:	Permit Number: IN0063355 Expiration Date: Five (5) years from issuance
Receiving Stream:	Indiana Harbor Ship Canal
Source Contact: **Source Address:**	Mr. Raymond Hawkins 3300 Dickey Road East Chicago, Indiana 46312
Proposed Action:	New Permit Date Application Received: 12/03/2008
Source Category	NPDES Major – Industrial
Permit Writer:	Nicole Gardner, Senior Environmental Manager 317/232-8709 ngardner@idem.in.gov

ArcelorMittal Steel USA, Inc.
Indiana Harbor Long Carbon
3210 Watling Street
East Chicago, IN 46312
Lake County

ORGANIZATION OF FACT SHEET

	Section	Page
A.	Introduction	3
B.	Use Classifications	4
C.	Great Lakes System Discharger Requirements	5
D.	Facility Description	5
	1. General	5
	2. Existing Discharges	5
	3. Wastewater Treatment	7
E.	Development of Proposed Effluent Limitations	7
	1. Clean Water Act Requirements	7
	2. Technology-Based Effluent Limitations	8
	3. Water Quality-Based Effluent Limitations	9
	4. Whole Effluent Toxicity Testing Requirements	16
	5. Thermal Requirements	17
	6. Antidegradation	20
	7. Proposed Effluent Limitations by Outfall	24
F.	Special NPDES Permit Conditions and Monitoring Programs	27
	1. Stormwater Requirements	27
	2. Pollutant Minimization Program	30
	3. Schedule of Compliance	30
	4. Free Cyanide and Fluoride	33
	5. Zebra and Quagga Mussel Control	33
	6. Groundwater Remediation Project	33
	7. Reporting Requirements for Solvents etc.	34
	8. Water Treatment Additives	34
	9. Biocides Concentration	35
	10. PCB	35
	11. Cooling Water Intake Structures	35
G.	Permit Processing/Public Comment/Appeal Process	36
	Attachments	
	I. Facility Outfall Location Map	37
	II. Outfall Line Discharge Drawings	38
	III. Technology-Based Effluent Limitations	39
	IV. IDEM RPE, WQBEL, and Antidegradation Tables.	40-43
	V. Treatment System Line Drawings	44-45
	VI. Post Public Notice Addendum	46-85

A. Introduction

Development of a Fact Sheet for NPDES permits is required by Title 40 of the Code of Federal Regulations, Section 124.8 and 124.6, as well as requirements in the Indiana Administrative Code (IAC) 327, Section 5. This document fulfills the requirements established in those regulations by providing the information necessary to inform the public of actions proposed by the Indiana Department of Environmental Management, as well as the methods by which the public can participate in the process of finalizing those actions.

The technical basis for the Fact Sheet may consist of evaluations of promulgated effluent guidelines and other treatment-technology based standards, existing effluent quality, instream biological, chemical, and physical conditions, and the allocations of pollutants to meet the Indiana State Water Quality Standards.

Technology Based Effluent Limits are required by Section 301(b) of the Clean Water Act. Many of these have already been established by U.S. EPA in the effluent guideline regulations (a.k.a. categorical regulations) for industry categories in 40 CFR 405-499. Technology-based regulations for publicly-owned treatment works are listed in the Secondary Treatment Regulations (40 CFR Part 133). If regulations have not been established for a category of dischargers, the Commissioner may establish technology-based limits based on best professional judgment (BPJ).

IDEM evaluates the need for water-quality-based limits on a pollutant-by-pollutant basis. Wasteload allocations are used to develop these limits based on the pollutants that have been detected in the discharge and the receiving water's characteristics. In accordance with 327 IAC 5-1.5-69, a wasteload allocation (WLA) is the portion of a receiving water's loading capacity that is allocated to one (1) of its existing or future point sources of pollution. In the absence of a TMDL approved by EPA under 40 CFR 130.7 or an assessment and remediation plan developed and approved in accordance with 327 IAC 5-2-11.4(a), a WLA is the allocation for an individual point source, that ensures that the level of water quality to be achieved by the point source is derived from and complies with all applicable water quality standards.

The need for water-quality-based limits is determined by comparing the wasteload allocation for a pollutant to a measure of the effluent quality. The measure of effluent quality is called PEQ-Projected Effluent Quality. This is a statistical measure of the average and maximum effluent values for a pollutant. As with any statistical method, the more data that exists for a given pollutant, the more likely that PEQ will match the actual observed data. A PEQ is calculated by multiplying the highest measured value by a statistical factor that accounts for effluent variability and limitations associated with small data sets. For example, if only one sample exists, the factor is 6.2, for two samples – 3.8, for three samples 3.0, etc. The factors continue to decline as the sample size increases. If the pollutant concentrations are fairly constant, but the data set is small, these factors may make the PEQ appear larger than it would be shown to be if more sample results existed.

In addition to the reasonable potential approach detailed above EPA has provided additional guidance to IDEM on determining the need for water quality based effluent limits at the final outfall using TBELs determined appropriate at an internal outfall. This approach is separate from the RPE statistical analysis done during the modeling phase of permit development. Once

the TBELs are calculated these are then compared to the WQBELs using the allowed mass calculated for the TBELs. If the TBELs calculated mass exceed the WQBELs mass then there is a reasonable potential to exceed a water quality criterion and WQBELs are required at the final outfall.

B. Use Classifications:

The Indiana Harbor Canal and Indiana Harbor are designated for full-body contact recreation and shall be capable of supporting a well-balanced, warm water aquatic community. The Indiana Harbor is designated as an industrial water supply. The Indiana portion of the open waters of Lake Michigan is designated for full-body contact recreation; shall be capable of supporting a well-balanced warm water aquatic community; is designated as salmonid waters and shall be capable of supporting a salmonid fishery; is designated as a public water supply; is designated as an industrial water supply; and, is designated as an outstanding state resource water. These waterbodies are identified as waters of the state within the Great Lakes system. As such, they are subject to the water quality standards and associated implementation procedures specific to Great Lakes system dischargers as found in 327 IAC 2-1.5, 327 IAC 5-1.5, and 327 IAC 5-2.

Section 303(d) of the Clean Water Act requires states to identify waters, through their Section 305(b) water quality assessments, that do not or are not expected to meet applicable water quality standards with federal technology based standards alone. States are also required to develop a priority ranking for these waters taking into account the severity of the pollution and the designated uses of the waters. Once this listing and ranking of impaired waters is completed, the states are required to develop Total Maximum Daily Loads (TMDLs) for these waters in order to achieve compliance with the water quality standards. Indiana's 2010 303(d) List of Impaired Waters was developed in accordance with Indiana's Water Quality Assessment and 303(d) Listing Methodology for Waterbody Impairments and Total Maximum Daily Load Development for the 2010 Cycle. As of the 2010 303(d) List of Impaired Waters, the following impairments were listed for waters to which the permittee discharges:

Table 1

Assessment Unit	Waterbody	Impairments	ArcelorMittal Long Carbon Outfall
INC0163_T1001	Indiana Harbor Canal	Impaired Biotic Communities, Oil and Grease, *E. coli* and PCBs in Fish Tissue	001
INC0163G_G1078	Indiana Harbor	Free Cyanide Mercury in Fish Tissue PCBs in Fish Tissue	None
INM00G1000_00	Lake Michigan	Mercury in Fish Tissue PCBs in Fish Tissue	None

C. Great Lakes System Discharger Requirements:

The permittee discharges to a waterbody that has been identified as a water of the state within the Great Lakes system and that is a tributary to an Outstanding State Resource Water (OSRW). In addition to OSRW antidegradation implementation procedures under 327 IAC 5-2-11.7, it is subject to other NPDES requirements specific to Great Lakes system dischargers under 327 IAC 2-1.5 and 327 IAC 5-2-11.2 through 327 IAC 5-2-11.6. These rules address water quality standards applicable to dischargers within the Great Lakes system and reasonable potential to exceed water quality standards procedures.

As required by 327 IAC 5-2-11.3(b)(2), Part II.A.16. of the renewal permit specifically prohibits the permittee from undertaking deliberate actions that would result in new or increased discharges of BCC's or new or increased permit limits for non-BCC's, or from allowing a new or increased discharge of a BCC from an existing or proposed industrial user, without first proving that the new or increased discharge would not result in a significant lowering of water quality, or by submission and approval of an antidegradation demonstration to the IDEM.

D. Facility Description

The Department received the application from ArcelorMittal Steel USA Inc.- Indiana Harbor Long Carbon on December 3, 2008. These processes and wastewater discharges were previously permitted under NPDES Permit No. IN0000094, a permit also issued to ArcelorMittal. A five year permit is proposed.

1.0 General

ArcelorMittal Steel USA Inc. – Indiana Harbor Long Carbon facility is a steel manufacturing facility. Operations at this facility consist of electric furnace steelmaking, ladle metallurgy, billet casting, hot rolling (bar mill), and ancillary operations. The wastewater treatment system has an average discharge of approximately 3.65 MGD and has been given a Class D industrial wastewater treatment plant classification in accordance with 327 IAC 5-22.

Table 2

Description	Average Daily Production
Continuous Casting	2067 tons/day
Hot Forming	2199 tons/day

2.0 Existing Discharges

Outfalls 001, 602, 020, 021, and 022 have been removed from IN0000094 at the permittee's request for inclusion in a new NPDES permit.

As described below, the permittee has a several outfalls discharging to the Indiana Harbor Ship Canal. These discharges are limited by a combination of 40 CFR Part 420, ambient water quality

standards adopted by the Indiana Water Pollution Control Board, and limitations from the previous permit whichever are the more stringent.

Attachment I is a facility map showing the approximate locations of the active process and cooling water outfalls. Attachment II is an outfall schematic diagram showing contributing sources and approximate discharge flow rates.

The outfall number, latitudes and longitudes, receiving water, flow, and sources of water discharged are presented below for each outfall. These are the flow values which were used in the modeling process to determine the PELs and in calculating mass limits at the corresponding final outfalls

a. Outfall 001 - Indiana Harbor Ship Canal 3.6 MGD

Latitude: 41° 39' 07" Longitude: -87° 27' 46"

The discharge from Outfall 001 consists of once-through non-contact cooling water, treated process water from the Electric Furnace/Billet Caster (EC/BC) and 12" Bar Mill (Internal Outfall 602), Electric Arc Furnace slag cooling water, steam condensates, groundwater, and some storm water. Non-contact cooling water is chlorinated and de-chlorinated prior to discharge whenever intake water temperature is above 55°F.

b. Outfall 602 - Indiana Harbor Ship Canal via Outfall 001 0.16 MGD

Latitude: 41° 39' 01" Longitude: -87° 27' 27"

Outfall 602 is the internal process wastewater outfall for the EF/BC and 12" Bar Mill process wastewater treatment systems. The treated wastewaters are limited and monitored prior to mixing with non-contact cooling water and discharges to the Indiana Harbor Ship Canal via Outfall 001.

c. Outfalls 020, 021, 022 – Indiana Harbor Ship Canal Variable

Outfall 020:

Latitude: 41° 39' 13" Longitude: -87° 27' 37"

Outfall 021:

Latitude: 41° 39' 13" Longitude: -87° 27' 37"

Outfall 022:

Latitude: 41° 39' 16" Longitude: -87° 27' 33"

Outfalls 020, 021, 022 are storm water only outfalls. There is also a low volume discharge from ground water infiltration into the sewers.

Outfall 020 is a 48-inch pipe that collects storm water runoff from the north side of the east building of the 12-inch Mill and some runoff from the scrap metal stock pile and trailer area. Outfall 020 has a small quantity of groundwater infiltration entering the sewer system and discharging from this source.

Outfall 021 is a 42-inch pipe that collects storm water runoff from the roof drains on the south side of the 12-inch Mill Shipping bays, roof drains from the north side of the Shipping, and the Scrap Preparation Area. This area also has some runoff from construction trailers located along the Indiana Harbor Ship Canal. Outfall 021 has a small quantity of groundwater infiltration entering the sewer system and discharging from this source.

Outfall 022 is a 36-inch pipe. It collects storm water runoff from the roof drains on the north side of the old Open Hearth Building and the parking lots and transfer station located along Dickey Road. Outfall 022 has a small quantity of groundwater infiltration entering the sewer system and discharging from this source.

3.0 Wastewater Treatment

Internal Outfall 602:

The Electric Furnace/Billet Caster (EF/BC) and Bar Mill water treatment systems are high rate process water recycle systems with minimal blow down from Internal Outfall 602. The EF/BC system supplies process water to the billet caster for roll cooling, scale breaking, and flume flushing and cooling water from machine and mold cooling. The treatment consists of solids and oil recovery in a roughing pit and a scale pit, high rate multi-media sand filtration, and a forced draft cooling tower. Blow down from the EF/BC consists entirely of filter backwash, which is discharged to the 12" Bar Mill flocculator clarifiers.

The Bar Mill Recycle process water treatment also consists of solids and oil removal in a roughing pit and a scale pit, high rate sand filtration, and a forced draft cooling tower. Filter backwash is discharged to two flocculator clarifiers. Overflow from the clarifiers returns to the process water loop. Clarifier under flow is processed by vacuum drum filtration and the filtrate returned to the clarifiers. Dewatered solids are sent to an off-site disposal.

E. Development of Proposed Effluent Limitations and Special NPDES Permit Conditions

1. Clean Water Act Requirements

Section 402 of the Clean Water Act (CWA) establishes a National Pollutant Discharge Elimination System (NPDES) permit program. The NPDES permit program is designed to limit the discharge of pollutants into navigable waters of the United States through a combination of various requirements including technology-based and water quality-based effluent limitations. The CWA provides that the Administrator of U.S. EPA, or his designee, must concur with major permits issued by delegated state agencies. The NPDES permit program for Indiana was delegated to the Indiana Department of Environmental Management by U.S. EPA.

Sections 301, 304, 306 and 307 of the CWA also provide that U.S. EPA must promulgate national effluent limitations guidelines and standards of performance for major industrial categories for three classes of pollutants: (1) conventional pollutants (e.g., Total Suspended Solids, Oil and Grease, Biochemical Oxygen Demand and pH); (2) toxic pollutants (e.g., toxic metals such as Chromium, Lead and Zinc; toxic organic pollutants such as Naphthalene and Tetrachloroethylene); and (3) non-conventional pollutants (e.g., Ammonia-N, Fluoride and Phenols (4AAP)).

Six types of effluent limitations guidelines and standards must be promulgated for each major industrial category:

Abbreviation	Effluent Limitation Guideline or Standard
BPT	Best Practicable Control Technology Currently Available
BAT	Best Available Technology Economically Achievable
BCT	Best Conventional Pollutant Control Technology
NSPS	New Source Performance Standards
PSES	Pretreatment Standards for Existing Sources
PSNS	Pretreatment Standards for New Sources

The pretreatment standards are applicable to industrial facilities with wastewater discharges to publicly owned treatment works (POTWs) which generally are municipal wastewater treatment plants. The effluent limitations guidelines and new source performance standards are applicable to industrial facilities with direct discharges to navigable waters. Thus, for purposes of the proposed NPDES permit, only the first four types of effluent limitations guidelines and standards are applicable to ArcelorMittal Indiana Harbor Long Carbon. Section 301 of the CWA, as amended by the Water Quality Act of 1987, requires that BPT effluent limitations were to have been achieved by July 1, 1977. BAT effluent limitations for toxic pollutants, BAT effluent limitations for non-conventional pollutants, and BCT effluent limitations for conventional pollutants must be achieved within three years from date of promulgation but no later than March 31, 1989. Section 402(a)(1) of the CWA provides that in the absence of promulgated effluent limitations guidelines or standards, the Administrator, or his designee, may establish effluent limitations for specific dischargers on a case-by-case basis. U.S. EPA regulations provide that these limits may be established using "best professional judgment" (BPJ) taking into account proposed effluent limitations guidelines and standards and other relevant scientific, technical and economic information.

The effluent limitations guidelines and standards applicable to the permittee are found at 40 CFR Part 420 for continuous casting and hot forming operations. 40 CFR Part 420 was promulgated in May 1982, and amended in May 1984. 40 CFR 420 was recently updated with the final revisions to this section signed April 30, 2002, and published in the Federal Register on October 17, 2002.

2. Technology-Based Effluent Limitations

Attachment III presents the derivation of the applicable technology-based effluent limitations guidelines and standards for the permittee for each process wastewater outfall. For each of the basic steelmaking and steel finishing operations, the NPDES production rates developed by the

permittee were used in combination with the BPT, BAT or BCT effluent limitations guidelines or NSPS from 40 CFR Part 420 to compute the allowable federal technology based discharges of the regulated pollutants.

Following is a brief description of the application of the technology-based effluent limitations guidelines and standards by process operation:

EAF Billet Caster and 12" Bar Mill
Continuous Casting and Hot Forming: Internal Outfall 602

Table 3

Internal Outfall 602
Technology-Based Effluent Limitations and Standards
40 CFR Part 420.62/63
40 CFR Part 420.72/77(b)(1)
Effluent Limitations in lbs/day

Pollutant	40 CFR 420.62/63 (BPT/BAT) 420.72/77(b)(1) (BPT/BCT)	
	30-Day Average (lbs/day)	Daily Maximum (lbs/day)
Total Suspended Solids	696.8 (404)	1892.48 (1095)
O & G	94.0 (-----)	489.90 (282)
Total Lead	0.50 (0.26)	1.49 (0.60)
Total Zinc	0.74 (0.75)	2.23(2.25)

Limits in parenthesis ( ) are the limits in the current permit.

3. Water Quality Based Effluent Limitations

ArcelorMittal Indiana Harbor Long Carbon Outfall 001 was previously included in NPDES Permit No. IN0000094. The water quality-based effluent limitations applied to Outfall 001 in that permit, which was previously issued in 1996, were developed as part of the 1992 Grand Calumet River – Indiana Harbor Ship Canal Wasteload Allocation Study. The 1992 wasteload allocation was based on Indiana water quality standards that became effective in 1990 (new water quality criteria and an upgraded use designation for the Grand Calumet River and Indiana Harbor Canal) and a multi-discharger model that included the Indiana Harbor Watershed (Grand Calumet River (East and West Branches), Indiana Harbor Canal and Indiana Harbor) and portions of Lake Michigan around the Indiana Harbor. Pollutants selected for the wasteload allocation were based on water quality concerns at the time. Specific allocations for Lead and Zinc were assigned to ArcelorMittal Outfall 001 as part of the wasteload allocation. Water quality-based effluent limitations were only included for Total Residual Chlorine in the 1996 permit at Outfall 001.

New regulations in Indiana governing the development of water quality-based effluent limitations for discharges to waters within the Great Lakes system became effective in 1997. The regulations were developed in accordance with the Water Quality Guidance for the Great Lakes System at 40 CFR Part 132. The regulations included new water quality criteria and

methodologies for developing water quality criteria (327 IAC 2-1.5), and procedures for calculating wasteload allocations (WLAs) (327 IAC 5-2-11.4), making reasonable potential to exceed determinations (5-2-11.5) and developing water quality-based effluent limitations (WQBELs) (5-2-11.6). These regulations are applicable to individual pollutants and to whole effluent toxicity. The application of whole effluent toxicity requirements to ArcelorMittal is included in a later section. Due to the new regulations, a different approach was warranted in determining the need for and establishing WQBELs in the Grand Calumet River, Indiana Harbor Canal and Indiana Harbor.

The 1992 multi-discharger model included a hydrodynamic component and a water quality component and was able to simulate in-stream dissolved oxygen concentrations. The model also accounted for flow stratification in the Indiana Harbor Canal and Indiana Harbor and the intrusion of lake water into the Indiana Harbor Canal. The model did not restrict any point source discharges based on mixing zones. The development of a hydrodynamic model for the whole watershed is a resource intensive effort that still requires IDEM to develop wasteload allocations for each outfall to be used as inputs into the model. The 1997 Great Lakes rules added additional requirements for the development of wasteload allocations that were not required in previous modeling efforts. The antidegradation implementation provisions included in the 1997 Great Lakes rules also added an additional level of scrutiny to the incorporation of wasteload allocations developed through the new regulations into NPDES permits.

A review of the 2010 303(d) list shows that there are no pollutants on the list that have the potential to impact wasteload allocation analyses conducted for the renewal of NPDES permits for dischargers on a whole watershed basis. The new listing for Free Cyanide in the Indiana Harbor could potentially impact discharges to the Indiana Harbor Canal and Indiana Harbor. The listing is based on Free Cyanide data collected during the years 2000 and 2001 at IDEM fixed station IHC-0 in the Indiana Harbor. The aquatic life criteria for cyanide were changed from Total Cyanide to Free Cyanide in the 1997 Great Lakes rulemaking. It is IDEM current practice to monitor for Total Cyanide at fixed stations and analyze samples for Free Cyanide only when Total Cyanide data show a reportable concentration (> 5 ug/l). After 2001, data collected at fixed station IHC-0 no longer showed any reportable values for Total Cyanide so Free Cyanide data were not collected. Based on the 2010 listing methodology, the Total Cyanide data could not be used to assess the Indiana Harbor for Free Cyanide. The Indiana Harbor Canal was not listed for Free Cyanide on the 2010 303(d) list due to the two IDEM fixed stations in the Indiana Harbor Canal (located upstream of fixed station IHC-0 at Columbus Avenue and Dickey Road) not showing impairment for Free Cyanide. Total Cyanide is reported at many of the steel mill outfalls in the Indiana Harbor Canal and Indiana Harbor due to technology-based effluent limits (TBELs) for this parameter, but little data for Free Cyanide are available. Therefore, in the NPDES permit renewals, monitoring for Free Cyanide will be required at steel mill outfalls that have process wastewater for use in an assessment of reasonable potential. These data can also be used along with Total Cyanide data at fixed station IHC-0 and data collected in the Indiana Harbor Canal to reassess the impairment for Free Cyanide.

Therefore, a whole watershed model is not required at this time to develop permit requirements to address any TMDL related issues. There is currently not a need to develop WLAs for pollutants that impact the instream dissolved oxygen so a whole watershed hydrodynamic model is not needed for this purpose. There are several items that have occurred in the Indiana Harbor watershed since the 1992 model was developed that can be used to help establish a reasonable

approach, other than a whole watershed model, to develop WLAs for discharges in the watershed. The number of dischargers to the Indiana Harbor watershed has decreased, the number of steel mill outfalls has decreased and the discharge volume at many of the remaining steel mill outfalls has decreased. U.S. Steel Gary Works dredged the five mile stretch of the East Branch Grand Calumet River along their property in 2003. Dredging of portions of the West Branch Grand Calumet River west of Indianapolis Boulevard began in December 2009. Data for a variety of parameters have been collected on a monthly basis by IDEM at several fixed water quality monitoring stations in the watershed. Three stations are located on the East Branch Grand Calumet River, one on the West Branch Grand Calumet River, two on the Indiana Harbor Canal, one on Lake George Canal and one on the Indiana Harbor. The U.S. Geological Survey (USGS) installed a stream gage in the Indiana Harbor Canal in 1991 that can be used to determine the Q7,10 and other stream flow statistics of the Indiana Harbor Canal. An intensive instream sampling effort along with effluent sampling of major dischargers occurred in July 1999 and April 2000 as part of the Grand Calumet River TMDL Study.

Taking into consideration the above information, it was decided to divide the Indiana Harbor watershed into three subwatersheds and determine the need for and establish water quality-based effluent limitations on a subwatershed basis. In this approach, the background concentration for each subwatershed is determined using instream water quality data instead of concentrations determined through whole watershed modeling. During the development of the wasteload allocation for the U.S. Steel Gary Works (IN0000281) NPDES permit that was renewed January 22, 2010, the Indiana Harbor watershed was divided into the following three subwatersheds: East Branch Grand Calumet River, West Branch Grand Calumet River (the portion that flows east into the Indiana Harbor Canal) and the Indiana Harbor Canal/Lake George Canal/Indiana Harbor. The analysis for the East Branch Grand Calumet River is included in the Fact Sheet of the U.S. Steel Gary Works 2010 permit. The analysis for the West Branch Grand Calumet River will be conducted as part of the NPDES permit renewals for the Hammond Sanitary District (IN0023060) and the East Chicago Sanitary District (IN0022829).

The subwatershed model for the Indiana Harbor Canal/Lake George Canal/Indiana Harbor included the ArcelorMittal Indiana Harbor Long Carbon facility which has one active outfall (not consisting entirely of stormwater) that discharges directly to the Indiana Harbor Canal. The other major dischargers included in the subwatershed model are as follows in relation to the ArcelorMittal Indiana Harbor Long Carbon facility: ArcelorMittal USA – Indiana Harbor East (IN0000094) which has one active outfall downstream to the Indiana Harbor Canal and three active outfalls downstream to the Indiana Harbor; ArcelorMittal Indiana Harbor – Central Wastewater Treatment Plant (IN0063711) which has one active outfall upstream to the Indiana Harbor Canal; and, ArcelorMittal Indiana Harbor – Indiana Harbor West (IN0000205) which has three active outfalls downstream to the Indiana Harbor Canal, one active outfall downstream to the Indiana Harbor and one water intake in the Indiana Harbor near the mouth of the Indiana Harbor Canal. The discharges from all these facilities were taken into consideration in determining the need for and establishing WQBELs for the discharge from ArcelorMittal Indiana Harbor Long Carbon Outfall 001.

The procedures under 5-2-11.4 may be used to establish TMDLs, wasteload allocations in the absence of TMDLs and preliminary wasteload allocations. These procedures apply to the discharges to the Indiana Harbor Canal/Lake George Canal/Indiana Harbor. A TMDL has not been completed for the Assessment Units for the Indiana Harbor Canal and Indiana Harbor

receiving the discharges from ArcelorMittal and a TMDL is not required for any of the pollutants of concern being considered in the wasteload allocation analysis. Therefore, the procedures under 5-2-11.4 were used to develop preliminary wasteload allocations and wasteload allocations in the absence of a TMDL.

Wasteload allocations in the absence of TMDLs are developed to establish water quality-based effluent limitations under 5-2-11.6 and preliminary wasteload allocations are developed to make reasonable potential determinations under 5-2-11.5. The reasonable potential procedures under 5-2-11.5 include provisions for making reasonable potential determinations using best professional judgment (5-2-11.5(a)) and using a statistical procedure (5-2-11.5(b)). The statistical procedure is a screening process in which a projected effluent quality (PEQ) based on effluent data is calculated and compared to a preliminary effluent limitation (PEL) based on the preliminary wasteload allocation. Both the best professional judgment and statistical procedures were used to establish the need for water quality-based effluent limitations to protect the designated uses of the Indiana Harbor Canal, Indiana Harbor and Lake Michigan.

A separate provision for making reasonable potential determinations for discharges consisting solely of once-through noncontact cooling water (NCCW) is included under 5-2-11.5(g). This provision may also be applied to discharges consisting of mixed wastestreams (e.g. NCCW, stormwater and process wastewater) if each component is considered separately. The discharge from ArcelorMittal Indiana Harbor Long Carbon Outfall 001 consists of mixed wastestreams. While IDEM is placing special conditions on the stormwater component, Outfall 001 includes sources of wastewater besides NCCW and stormwater. Information was not available to determine reasonable potential for the individual sources of wastewater. Therefore, this provision was not applied to ArcelorMittal Indiana Harbor Long Carbon Outfall 001.

To develop wasteload allocations and conduct reasonable potential to exceed analyses, IDEM utilized the following effluent data collected and submitted by ArcelorMittal: data collected during the period July 2005 through June 2010 in accordance with the current permit and reported on monthly monitoring reports (MMRs); data collected in 1999, 2000 and 2001 (Mercury only in 2001) as part of the Grand Calumet River TMDL study; data collected during a six week period in 1996 as part of a condition in the 1996 permit; and, data collected in 1996 and 1997 during a one year oxygen demand monitoring program required as part of a condition in the 1996 permit.

To develop wasteload allocations, IDEM utilized the following sources of water quality data for the Indiana Harbor Canal and Indiana Harbor: IDEM fixed water quality monitoring station IHC-3S at Columbus Drive (Indiana Harbor Canal upstream of Lake George Canal and all ArcelorMittal outfalls); IDEM fixed station IHC-2 at Dickey Road (Indiana Harbor Canal); IDEM fixed station IHC-0 near the mouth of the Indiana Harbor; data collected in the Indiana Harbor Canal and Indiana Harbor in 1999 and 2000 as part of the Grand Calumet River TMDL study; data collected by ArcelorMittal at two locations in the Indiana Harbor Canal and one location in the Indiana Harbor during their six week monitoring period in 1996; and, Mercury data collected by USGS in 2001 and 2002.

After a review of effluent and instream data, it was decided to conduct a multi-discharger WLA for Ammonia-N, Chloride, Fluoride, Sulfate, Lead, Zinc and Total Residual Chlorine. Indiana currently only has a Great Lakes water quality criterion for Sulfate that applies to public water

supply intakes and to Lake Michigan. A screening value based on the Indiana criterion for waters outside the Great Lakes system at 2-1-6(a)(5) was used for the Indiana Harbor Canal and Indiana Harbor. An industrial water supply criterion for Total Dissolved Solids of 750 mg/l applies in the Indiana Harbor at the ArcelorMittal Indiana Harbor – Indiana Harbor West intake. This also limits the amount of Sulfate that can be discharged due its contribution to dissolved solids. Other pollutants of concern, including Mercury, were considered on an outfall by outfall basis. Effluent data for ArcelorMittal Indiana Harbor Long Carbon Outfall 001 from the six week monitoring period in 1996 showed Total Chromium concentrations of less than 5 ug/l and the two data points collected in 1999 and 2000 as part of the Grand Calumet River TMDL study showed Total Chromium concentrations of 0.4 ug/l. Based on these data points being much less than the most stringent, applicable water quality criteria (130 ug/l dissolved Chromium (III) and 11 ug/l dissolved Hexavalent Chromium), Total Chromium and Hexavalent Chromium were not considered pollutants of concern for Outfall 001.

In the 1992 model, the Indiana Harbor Canal was divided into sixteen complete mix segments, the Lake George Canal into five complete mix segments and the Indiana Harbor into five complete mix segments. Each of these segments included surface and bottom layers to account for stratification resulting from the warmer canal water inducing an underflow of cooler lake water. The intrusion of lake water was accounted for in the model by adding a portion of the total lake intrusion flow to the surface layer of each of nine affected segments in the Indiana Harbor and Indiana Harbor Canal. A total lake intrusion flow of 1000 cfs was used in the 1992 model. The lake intrusion flow was reevaluated in 2002 by the U.S. Army Corps of Engineers (USACE) as part of the Grand Calumet River TMDL Study. The USACE determined that the lake intrusion flow used in the 1992 model was based on measurements collected during a high lake level. The USGS measured a lake intrusion flow of 138 cfs in October 2002 during a normal lake level condition. The lake intrusion flow measured during the normal lake level condition was determined to be more appropriate for modeling purposes. A new multi-discharger model was developed using a spreadsheet to conduct the multi-discharger WLA for the Indiana Harbor Canal/Lake George Canal/Indiana Harbor. The segmentation used in the 1992 model was maintained in the new spreadsheet model, but only the surface layer was modeled since it will have the higher pollutant concentrations.

In the development of wasteload allocation inputs for the 1992 model, the final acute value (FAV) was applied to individual outfalls and chronic criteria were applied to the end of each segment allowing up to one hundred percent (100%) of the stream flow for mixing. The procedures in 5-2-11.4 require the more stringent of the FAV or the acute WLA calculated using up to a one-to-one dilution to be applied to individual outfalls. They also limit the dilution available for each outfall (the mixing zone) to twenty-five percent (25%) of the stream design flow. Because of the potential for overlapping mixing zones within a segment, the combined discharges in a segment were also limited collectively to twenty-five percent (25%) of the stream design flow. This was done in accordance with 5-2-11.4(b)(3)(D) which requires the combined effect of overlapping mixing zones to be evaluated to ensure that applicable criteria and values are met in the area where the mixing zones overlap.

Based on the reasonable potential statistical procedure at 5-2-11.5(b)(1)(iii) and (iv), the procedures under 5-2-11.4(c) are used as the basis for determining preliminary WLAs and the preliminary WLAs are then used to develop monthly and daily PELs in accordance with the procedure for converting WLAs into WQBELs under 5-2-11.6. Three critical inputs to the

procedure under 5-2-11.4(c) include the background concentration, the effluent flow and the stream flow. The background concentration is determined under 5-2-11.4(a)(8). Under this rule, background concentrations can be determined using actual instream data or instream concentrations estimated using actual or projected pollutant loading data. In the multi-discharger wasteload allocation, instream data were used to establish the background concentration for the first segment of the model and then either actual or projected pollutant loading data were used. For pollutants not included in the multi-discharger wasteload allocation, instream data were used.

In the 1992 model, the flow assigned to each outfall was the long-term average flow. This was continued in the current analysis using data from January 2006 through December 2007. The stream design flow used to develop wasteload allocations is determined under 5-2-11.4(b)(3). For the pollutants considered in this analysis, the aquatic life criteria are limiting and the stream design flow for chronic aquatic life criteria is the Q7,10. The flow entering the Indiana Harbor Canal consists mostly of treated effluent flow. It has been historical practice to carry the long-term average discharge flow through the watershed to be used to determine discharge requirements for downstream dischargers. Since three distinct subwatersheds are now being modeled and the background concentration is being reset using actual instream data, it was also necessary to reset the stream flow. Since the Q7,10 is the appropriate flow for the water quality criteria being considered, the Q7,10 was used as the upstream flow for the Indiana Harbor Canal/Lake George Canal/Indiana Harbor WLA. Therefore, the stream design flow was set equal to the Q7,10 flow in the first segment of the multi-discharger model and then the long-term average flow of each discharger was added to become the stream design flow for downstream dischargers. The lake intrusion flow was added to the stream design flow at the end of each applicable segment. The Q7,10 was calculated using data from USGS gaging station 04092750 which is located in the Indiana Harbor Canal at Canal Street. The data used in the calculation consisted of continuous daily mean flow data approved by the USGS for the period 10-1-1994 through 9-30-2009. The Q7,10 based on the climatic year (April 1 through March 31) is 352 cfs.

At each applicable outfall, PELs were calculated for each pollutant of concern using an outfall specific spreadsheet that calculates PELs using the procedures under 5-2-11.4(c) to calculate WLAs and the procedures under 5-2-11.6 to convert WLAs into PELs. The spreadsheet considers all water quality criteria (acute and chronic aquatic life, human health and wildlife) and associated stream design flows and mixing zones. The stream design flow for each water quality criterion was set equal to the same value in the outfall specific spreadsheet. This value was the Q7,10 flow plus the accumulation of long term average effluent flow and any lake intrusion flow, minus any intake flow. For Mercury, which is a bioaccumulative chemical of concern (BCC), a mixing zone was not allowed in the development of PELs for any outfall in accordance with 5-2-11.4(b)(1). For those pollutants included in a multi-discharger WLA, the multi-discharger spreadsheet model was used to ensure that the most stringent water quality criterion is met at the edge of the mixing zone for each segment. This was the 4-day average chronic criterion. The multi-discharger model was also used to ensure that Lake Michigan criteria are met at the end of the last segment in the Indiana Harbor. The preliminary WLA was included as an input in the multi-discharger model and PELs were calculated from the preliminary WLA.

In the multi-discharger model, preliminary WLAs for each outfall were established, if possible, so that the monthly and daily PEQs did not exceed the PELs calculated from the preliminary WLAs. If TBELs were included for the parameter at a final outfall or an internal outfall, then the preliminary WLA was increased to the extent possible to allow the mass-based PELs to exceed

the TBELs. The preliminary WLAs were adjusted as necessary so that the calculated PELs did not exceed the PELs calculated using the outfall specific spreadsheets and so that the water quality criterion was not exceeded at the edge of the mixing zone for each segment as determined using the multi-discharger model. For some outfalls, the discharge of one or more pollutants for which a multi-discharger WLA was conducted was not considered significant, so a preliminary WLA was established based on the reported effluent concentration, or if sufficient data were available, reported effluent loading data, but PELs were not calculated as allowed under 5-2-11.5(b)(1).

After assigning a preliminary WLA to each outfall in a segment and entering the WLA into the multi-discharger model, the model calculates the PELs for each outfall, the concentration at the edge of the mixing zone for the segment and the concentration at the end of each segment after complete mixing. The concentration after complete mixing then becomes the background concentration for the next segment. To calculate PELs using the outfall specific spreadsheets, the background concentration for each outfall was calculated assuming complete mixing between outfalls. This was done by entering the WLAs for each outfall into a separate spreadsheet that calculated the background concentration upstream of each outfall. By conducting a multi-discharger WLA in this manner, the background concentration for each outfall was based on the accumulated WLAs for the prior outfalls. Since the WLAs were based in some cases on projected effluent quality, the background concentrations were based on projected loading data. This provided a conservative means of determining the cumulative impact of the outfalls. For those pollutants not included in a multi-discharger WLA, the background concentration for each outfall was based on instream data.

The results of the reasonable potential statistical procedure are included in Table 1 of Attachment IV. The results show that the discharge from ArcelorMittal Indiana Harbor Long Carbon Outfall 001 has a reasonable potential to exceed a water quality criterion for Mercury.

In addition to establishing WQBELs based on the reasonable potential statistical procedure, IDEM is also required to establish WQBELs under 5-2-11.5(a) "If the commissioner determines that a pollutant or pollutant parameter (either conventional, nonconventional, a toxic substance, or whole effluent toxicity (WET)) is or may be discharged into the Great Lakes system at a level that will cause, have the reasonable potential to cause, or contribute to an excursion above any applicable narrative criterion or numeric water quality criterion or value under 327 IAC 2-1.5". Chlorine is added to the intake water for zebra and quagga mussel control at concentrations exceeding water quality criteria. Outfall 001 receives noncontact cooling water. Therefore, chlorine may be discharged from Outfall 001 at a level that will cause an excursion above the numeric water quality criterion for Total Residual Chlorine under 2-1.5 and WQBELs for Total Residual Chlorine are required at Outfall 001.

For each pollutant receiving TBELs at a final or internal outfall, and for which water quality criteria or values exist or can be developed, concentration and corresponding mass-based WQBELs were calculated at the final outfall. The WQBELs were set equal to the applicable PELs from the multi-discharger model or the outfall specific spreadsheet. This was done for ArcelorMittal Indiana Harbor Long Carbon Outfall 001 (Lead and Zinc at internal Outfall 602). The mass-based WQBELs at the final outfall were compared to the mass-based TBELs. Since the facility is authorized to discharge up to the mass-based TBELs, if the mass-based TBELs exceed the mass-based WQBELs at the final outfall, the pollutant may be discharged at a level

that will cause an excursion above a numeric water quality criterion or value under 2-1.5 and WQBELs are required for the pollutant at the final outfall. This was not the case for Lead or Zinc.

Once a determination is made using the reasonable potential provisions under 5-2-11.5 that WQBELs must be included in the permit, the WQBELs are calculated in accordance with 5-2-11.5(d). Under this provision, in the absence of an EPA-approved TMDL, WLAs are calculated for the protection of acute and chronic aquatic life, wildlife, and human health in accordance with the WLA provisions under 5-2-11.4. The WLAs are then converted into WQBELs in accordance with the WQBEL provisions under 5-2-11.6. The WQBELs are included in Table 3 of Attachment IV and were set equal to the PELs calculated for each pollutant.

A wasteload allocation was not conducted for Free Cyanide due to the absence of effluent data for this pollutant of concern. Under 5-2-11.5(b)(2), when effluent data for a pollutant of concern are not available for an existing discharger, the commissioner shall exercise best professional judgment, taking into account the source and nature of the discharge, existing controls on point and nonpoint sources of pollution, and, where appropriate, the dilution of the effluent in the receiving water to determine whether it is necessary to require the discharger to collect the data required to make a reasonable potential determination. Based on the presence of Free Cyanide on the 2010 303(d) list for the Indiana Harbor, monitoring for Free Cyanide is being included at all ArcelorMittal outfalls containing process wastewater. Under 5-2-11.5(e), the commissioner may require monitoring for a pollutant of concern even if it is determined that a WQBEL is not required based on a reasonable potential determination. Monitoring was added for fluoride due to the inclusion of this pollutant in the multi-discharger wasteload allocation.

4. <u>Whole Effluent Toxicity Testing Requirements</u>

The 1997 Indiana Great Lakes regulations included narrative criteria with numeric interpretations for acute (2-1.5-8(b)(1)(E)(ii)) and chronic (2-1.5-8(b)(2)(A)(iv)) whole effluent toxicity (WET) and a procedure for conducting reasonable potential for WET (5-2-11.5(c)(1)). U.S. EPA did not approve the reasonable potential procedure for WET so Indiana is now required under 40 CFR Part 132.6(c) to use the reasonable potential procedure in Paragraphs C.1 and D of Procedure 6 in Appendix F of 40 CFR Part 132. IDEM used this procedure in conducting the reasonable potential analysis for WET except that the equation was rearranged so that it is similar to the equation that IDEM uses for other pollutants and pollutant parameters.

The 1996 permit (IN0000094) required ArcelorMittal Indiana Harbor Long Carbon to conduct acute WET testing using *Ceriodaphnia dubia* and Fathead Minnow quarterly for two years at Outfall 001. If toxicity, defined in the permit as 1.0 TUa (i.e. an LC50 of less than 100% effluent), was not demonstrated, no further WET testing was required. The facility did not demonstrate toxicity in any test at Outfall 001 and, therefore, discontinued their WET testing.

The results of the reasonable potential analysis are shown in Table 2 of Attachment IV. The results show that the discharge from Outfall 001 does not have a reasonable potential to exceed the numeric interpretation of the narrative criterion for acute WET.

The permittee will be required to conduct WET testing of its effluent discharge from Outfall 001 using *Ceriodaphnia dubia* and Fathead Minnow. The terms and conditions of the WET testing

are contained in Part I.D. of the NPDES permit. Part I.D.1.c.(2) of the permit states that chemical analysis must accompany each effluent sample taken for bioassay test. The analysis detailed under Part I.A.1. should be conducted for each effluent sample. The effluent should be sampled using the sample type requirements specified in Part I.A.1. Questions regarding the WET testing procedures should be addressed to the Office of Water Quality, NPDES Permits Branch.

As in the previous permit, acute toxicity testing is required at Outfall 001. Chronic toxicity testing is also being required at Outfall 001 for the first time. Acute toxicity is to be derived from chronic toxicity tests and toxicity is to be reported in terms of acute and chronic toxic units and compared to calculated toxicity reduction evaluation (TRE) triggers. The TRE triggers are set equal to the acute and chronic WLAs for WET in accordance with 327 IAC 5-2-11.6(d). If either an acute or chronic TRE trigger is exceeded, another chronic WET test must be conducted within two weeks. If the results of any two consecutive tests exceed the applicable TRE trigger, ArcelorMittal must conduct a TRE. After the completion of three toxicity tests that do not exceed the acute and chronic TRE triggers, ArcelorMittal may reduce the number of species tested to only include the most sensitive to the toxicity in the effluent. The TRE triggers are shown in Table 3 of Attachment IV.

5. Thermal Requirements

The Indiana Harbor Canal and Indiana Harbor shall be capable of supporting a well-balanced, warm water aquatic community. The water quality criteria for temperature applicable to these waterbodies are included in 327 IAC 2-1.5-8(c). Temperature was not a pollutant of initial focus in the Water Quality Guidance for the Great Lakes system under 40 CFR Part 132. Therefore, Indiana was allowed to apply its own temperature criteria to waters within the Great Lakes system when the rules were last revised in 1997 as part of the Great Lakes rulemaking. During this rulemaking, the monthly maximum temperature criteria that were updated in 1990 were retained. Indiana regulations state that the temperature criteria apply outside a mixing zone, but the allowable mixing zone is not established in the rules. IDEM current practice is to allow fifty percent (50%) of the stream flow for mixing to meet temperature criteria.

The implementation procedures under 327 IAC 5-2-11.4 for developing wasteload allocations for point source discharges address temperature under 5-2-11.4(d)(3). This provision states that temperature shall be addressed using a model, approved by the commissioner, that ensures compliance with the water quality criteria for temperature. There is also no specific procedure in the rules for determining whether a discharger is required to have water quality-based effluent limits (WQBELs) for temperature. Therefore, the general provision for making reasonable potential determinations in 5-2-11.5(a) is applicable. This provision establishes that if the commissioner determines that a pollutant or pollutant parameter is or may be discharged into the Great Lakes system at a level that will cause, have the reasonable potential to cause, or contribute to an excursion above any applicable narrative or numeric water quality criterion under 2-1.5, the commissioner shall incorporate WQBELs in an NPDES permit that will ensure compliance with the criterion. In making this determination, the commissioner shall exercise best professional judgment, taking into account the source and nature of the discharge, existing controls on point and nonpoint sources of pollution, the variability of the pollutant or pollutant parameter in the effluent, and, where appropriate, the dilution of the effluent in the receiving

water. The commissioner shall use any valid, relevant, representative information pertaining to the discharge of the pollutant.

The multi-discharger model for the Indiana Harbor Canal/Lake George Canal/Indiana Harbor subwatershed discussed above included five active outfalls discharging to the Indiana Harbor Canal and four active outfalls discharging to the Indiana Harbor that contain a thermal component such as noncontact cooling water or boiler blowdown as a source of wastewater. ArcelorMittal Indiana Harbor Long Carbon Outfall 001 has a flow of 3.6 mgd with Internal Outfall 602 contributing 0.16 mgd and the remaining flow consisting mostly of noncontact cooling water. The 1996 permit (IN0000094) includes temperature monitoring and the reporting of thermal discharge based on the intake and outfall temperatures. The source of cooling water for ArcelorMittal Indiana Harbor Long Carbon is the Main Intake of the ArcelorMittal Indiana Harbor East (IN0000094) facility on Lake Michigan. Effluent temperature data reported for the period January 1998 through December 2010 were reviewed. The data follow a seasonal pattern with a maximum recorded temperature of 87.4 °F in August 2003.

The multi-discharger model accounted for the intrusion of lake water into the Indiana Harbor and Indiana Harbor Canal. The intrusion of lake water produces thermal stratification that ends at the railroad bridge about 0.7 miles upstream of the mouth of the Indiana Harbor Canal. The ArcelorMittal Indiana Harbor Long Carbon outfall on the east side of the canal and two ArcelorMittal outfalls on the west side of the canal are upstream of the railroad bridge. ArcelorMittal West (IN0000205) Outfalls 009 and 010, which are two large sources of non-contact cooling water, are the first two discharges downstream of the railroad bridge. As part of a special condition in the 1996 permit (IN0000094), the facility was required to conduct sampling in the Indiana Harbor Canal downstream of Outfall 001 and between Outfalls 008 and 011 and in the Indiana Harbor at a point equal distant from Outfalls 011, 014 and 018. Sampling was to be conducted from April through November for two years and at three river depths (one foot below the surface, mid-depth and one foot above the bottom). The facility conducted the sampling in 1997 and 1998 and submitted a summary of the results of this sampling along with an analysis of the thermal impact of the ArcelorMittal discharges to the Indiana Harbor Canal and Indiana Harbor based on the sampling results in a November 19, 2010 report. The report concluded the following: ArcelorMittal East (IN0000094) and ArcelorMittal West (IN0000205) were both operating at reasonably high production rates in 1997 and 1998 as measured by raw steel production; ambient air temperatures were within normal ranges; there have been no significant changes in the flow regimes in the Indiana Harbor Canal since the study was done; and, the study results demonstrate compliance with applicable temperature criteria.

Additional temperature monitoring at multiple depths was conducted in the Indiana Harbor Canal and Indiana Harbor as part of the July 1999 and April 2000 sampling conducted for the Grand Calumet River TMDL study. The sampling included two locations in the Indiana Harbor (just beyond the lighthouse at the outer edge of the Indiana Harbor and in the middle of the Indiana Harbor, just downstream of ArcelorMittal West (IN0000205) Outfall 011, the last outfall on the Indiana Harbor), two locations in the Indiana Harbor Canal downstream of the railroad bridge (about 0.6 miles downstream of ArcelorMittal West Outfalls 009 and 010 at the mouth of the Indiana Harbor Canal and about 0.3 miles downstream of ArcelorMittal West Outfalls 009 and 010), one location just downstream from Dickey Road and downstream of the three thermal discharges upstream of the railroad bridge and one location just upstream of ArcelorMittal Central WWTP (IN0063711) Outfall 001 which is the ArcelorMittal thermal discharge that is

furthest upstream of the railroad bridge. The data showed temperature stratification downstream of the railroad bridge and a decreasing trend in temperature from upstream to downstream. The Indiana Harbor Canal and Indiana Harbor were in compliance with the water quality criteria for temperature. Effluent temperature and flow data were collected during the July 1999 sampling and effluent temperature data were collected during the April 2000 sampling. The TMDL studies were done after the shutdown of the No. 4 AC power station that discharged through ArcelorMittal East Outfall 018 until about May 1999. A review of historical instream temperature data at IDEM fixed stations on the Indiana Harbor Canal and Indiana Harbor from January 1990 through December 2010 and the fixed station on Lake Michigan from January 1997 through December 2010 shows that the maximum temperature values were recorded in July 1999. The average stream flow during the July 1999 temperature monitoring as recorded at USGS gaging station 04092750 in the Indiana Harbor Canal at Canal Street was 485 cfs which is close to the Q7,10 of 352 cfs. Therefore, the July 1999 temperature monitoring was done during a period that is very close to critical stream conditions.

In addition to the instream sampling, a multi-discharger model was used to assist in the reasonable potential analysis. The multi-discharger model for toxics discussed above was modified to account for temperature. The mixing zone was set at fifty percent (50%) of the stream flow to be consistent with current IDEM practice for mixing zones for temperature. The model does not account for heat dissipation so it represents a conservative, dilution only analysis. The effluent and instream data collected in July 1999 and April 2000 as part of the Grand Calumet River TMDL study were used as inputs to the model to determine if the model could predict the measured instream temperatures. The model predicts an increase in temperature downstream of the railroad bridge beginning with ArcelorMittal West Outfalls 009 and 010 and no exceedance at the edge of any mixing zones for both July 1999 and April 2000. The July 1999 TMDL data show a large decrease in temperature (about 7 °F) from Dickey Road to downstream of ArcelorMittal West Outfalls 009 and 010 in the upper one-half depth of the temperature stratified river with an even larger decrease in the lower one-half depth. There was essentially no further decrease in temperature in the Indiana Harbor during the sampling. The April 2000 TMDL data show a small decrease (about 0.5 °F) from Dickey Road to downstream of Outfalls 009 and 010. However, the temperature did decrease to a larger extent in the Indiana Harbor (about 4 °F). The multi-discharger model is therefore a conservative means of determining the impact of the thermal discharges.

A Q7,10 flow of 352 cfs, long-term average effluent flows, except as noted below, and background temperatures from fixed station IHC-3S were used in the multi-discharger thermal model as were used in the multi-discharger toxics model. The effluent temperature input to the model was set equal to the maximum temperature reported for the month during the period January 1998 through December 2010 if it was considered representative data. The maximum temperature for November for ArcelorMittal Indiana Harbor Long Carbon was reported in 2009, but it was not considered representative due to low discharge flows from the idling of the plant. The critical peak temperature months of June through September were included as one period since the same maximum criterion of 90 °F applies each month. The effluent flow for ArcelorMittal West Outfall 009 for the June through September period was set equal to the daily maximum flow due to this outfall having the highest effluent temperature and a significant increase in discharge flow during this period. The results of the conservative, dilution only modeling show that the discharge from ArcelorMittal Indiana Harbor Long Carbon Outfall 001 does not have a reasonable potential to cause or contribute to an excursion of the water quality

criterion for temperature in the Indiana Harbor Canal or Indiana Harbor from January through December. Based on the results of the instream sampling and multi-discharger thermal model, the discharge from ArcelorMittal Indiana Harbor Long Carbon Outfall 001 does not have a reasonable potential to exceed a water quality criterion for temperature. Under 5-2-11.5(e), the commissioner may require monitoring for a pollutant of concern even if it is determined that a WQBEL is not required based on a reasonable potential determination. Monitoring for temperature and thermal discharge was continued in the renewal permit.

6. Antidegradation

New regulations in Indiana governing implementation of antidegradation for discharges to waters within the Great Lakes system became effective in 1997. The regulations were developed in accordance with the Water Quality Guidance for the Great Lakes System at 40 CFR Part 132. The regulations included an antidegradation policy (327 IAC 2-1.5-4), antidegradation implementation procedures for High Quality Waters that are not Outstanding State Resource Waters (OSRWs) (327 IAC 5-2-11.3(b)) and antidegradation implementation procedures for OSRWs (5-2-11.7). The implementation procedures for High Quality Waters and OSRWs distinguish between pollutants that are bioaccumulative chemicals of concern (BCCs) and pollutants that are not BCCs. For waters that are not considered High Quality Waters, the regulations do not allow a lowering of water quality (5-2-11.3(a)).

The Indiana portion of the open waters of Lake Michigan is designated in 2-1.5-19(b)(2) as an OSRW. The antidegradation implementation procedures for OSRWs include provisions for discharges to tributaries of OSRWs in 5-2-11.7(a)(2). Since the Indiana Harbor Canal is a tributary to Lake Michigan, the discharge from ArcelorMittal Indiana Harbor Long Carbon Outfall 001 is subject to the antidegradation implementation procedures in 5-2-11.7(a)(2) in addition to those in 5-2-11.3. The procedures in 5-2-11.7(a)(2) are supplemented by Non-Rule Policy Document Water-002-NRD, "Antidegradation Requirements for Outstanding State Resource Waters Inside the Great Lakes Basin."

The Indiana Harbor Canal is considered a High Quality Water for all of the pollutants limited in the ArcelorMittal Indiana Harbor Long Carbon permit except Oil and Grease since it is included on the 2010 303(d) List for this parameter. The Indiana Harbor is considered a High Quality Water for all of the pollutants limited in the ArcelorMittal permit except Mercury since it is included on the 2010 303(d) List for Mercury in fish tissue. Lake Michigan is considered a High Quality Water for all of the pollutants limited in the ArcelorMittal permit except Mercury since it is included on the 2010 303(d) List for Mercury in fish tissue. Mercury is the only pollutant of concern in the ArcelorMittal permit that is a BCC.

After the effluent limitations were established for the proposed permit, a review was done to determine if the permit satisfies the antidegradation requirements in 5-2-11.3 and 5-2-11.7. The Indiana Harbor Canal is not a High Quality Water for Oil and Grease, so discharges of Oil and Grease from ArcelorMittal Outfall 001 are not allowed to cause a lowering of water quality in accordance with 5-2-11.3(a). The Indiana Harbor Canal is a High Quality Water for the other pollutants of concern in the ArcelorMittal permit so in accordance with 5-2-11.3(b), for High Quality Waters that are not designated as an OSRW, no action resulting in a significant lowering of water quality can occur unless an antidegradation demonstration has been completed and approved. Since the Indiana Harbor Canal is a tributary of an OSRW, in accordance with 5-2-

11.7(a)(2)(B), the discharges shall not cause a significant lowering of water quality in the OSRW. If a discharge to a tributary of an OSRW causes a significant lowering of water quality in the OSRW, it would not be allowed, regardless of an approvable antidegradation demonstration under 5-2-11.3.

According to 5-2-11.3(b)(1)(A), a significant lowering of water quality occurs if there is a new or increased loading of a BCC from a point source for which a new permit or permit modification would be required. According to 5-2-11.3(b)(1)(B), a significant lowering of water quality occurs if there is a new or increased permit limit for a non-BCC from a point source and the new or increased permit limit will result in both of the following:

(i) A calculated increase in the concentration of the substance outside of the mixing zone, and;
(ii) A lowering of water quality that is greater than a de minimis lowering of water quality.

According to 5-2-11.7(a)(2), for a new or increased discharge of a pollutant or pollutant parameter from a new or existing Great Lakes discharger into a tributary of an OSRW for which a new or increased permit limit would be required, the following apply:

(1) 327 IAC 5-2-11.3(a) and 327 IAC 5-2-11.3(b) apply to the new or increased discharge; and
(2) the discharge shall not cause a significant lowering of water quality in the OSRW.

According to nonrule policy document Water-002-NPD, a new or increased discharge into a tributary of Lake Michigan will not cause a significant lowering of water quality in Lake Michigan if any of several provisions are met, including the following:

> The new or increased discharge into a tributary of Lake Michigan does not cause a significant lowering of water quality in the tributary, as determined under 327 IAC 5-2-11.3(b)(1)(A) or 327 IAC 5-2-11.3(b)(1)(B).

In addition to the antidegradation provisions in 5-2-11.3(b)(1)(A) and 5-2-11.3(b)(1)(B), exemptions and exceptions to antidegradation apply in 5-2-11.3(b)(1)(C). For example, in accordance with 5-2-11.3(b)(1)(C)(ii), the following does not constitute a significant lowering of water quality:

New limits for an existing permitted discharger that are not a result of changes in pollutant loading, and will not allow an increase in pollutant loading, including new limits that are a result of the following:

(AA) New or improved monitoring data.
(BB) New or improved analytical methods.
(CC) New or modified water quality criteria or values.
(DD) New or modified effluent limitations guidelines, pretreatment standards, or control requirements for POTWs.

Similarly, in addition to the antidegradation implementation provisions in 5-2-11.7(a)(2)(A) and 5-2-11.7(a)(2)(B), exemptions and exceptions apply in 5-2-11.7(a)(2)(C). For example, in accordance with 5-2-11.7(a)(2)(C)(i), the requirements of 5-2-11.7(a)(2) will be considered to have been met when one or more of the items listed in 5-2-11.3(b)(1)(C)(ii) apply.

The antidegradation procedures used in this review apply to point source discharges. The definition of "point source" in 5-1.5-40 applies to the discharge of a pollutant and the definition of "discharge of a pollutant" in 5-1.5-11 includes discharges through pipes that do not lead to treatment works. Therefore, the antidegradation procedures are applied to final outfalls and to internal outfalls that do not lead to treatment works. Internal Outfall 602 does not pass through a treatment system prior to discharge through Outfall 001 and was considered a point source discharge subject to the antidegradation implementation procedures.

Table 4 in Attachment IV was developed to compare the existing effective limitations to the proposed limitations for each outfall. As noted above, the Indiana Harbor Canal is not a High Quality Water for Oil and Grease so discharges of Oil and Grease to the Indiana Harbor Canal are not allowed to cause a lowering of water quality in accordance with 5-2-11.3(a). For High Quality Waters, if the permit authorizes a new or increased loading of a BCC (Mercury) or new or increased limits for non-BCCs, further analysis was required to determine if the discharge would cause a significant lowering of water quality under 5-2-11.3. If the permit authorizes a new or increased discharge of a pollutant into a tributary of an OSRW for which a new or increased permit limit would be required, further analysis was also required to determine if the discharge would cause a significant lowering of water quality in the OSRW under 5-2-11.7(a)(2)(B). The footnotes at the end of Table 4 provide an explanation of the antidegradation analysis. The following are a few examples of the results of the antidegradation review in Table 4.

The Indiana Harbor Canal is not a High Quality Water for Oil and Grease, so antidegradation for the discharge of Oil and Grease was implemented under 327 IAC 5-2-11.3(a). This provision does not allow a lowering of water quality for Oil and Grease that prevents the attainment of the water quality criterion. Indiana does not have a numeric water quality criterion for Oil and Grease that applies to the Indiana Harbor Canal. The narrative water quality criteria that apply to the Indiana Harbor Canal do establish a water quality condition at 2-1.5-8(b)(1)(C) of being free from oil or other substances that produce a visible oil sheen in such degree as to create a nuisance. IDEM has used an Oil and Grease concentration of 10 mg/l to interpret this narrative criterion. A new monthly average TBEL for Oil and Grease is required at Internal Outfall 602. The Fact Sheet of the 1996 permit includes the calculation of monthly average and daily maximum TBELs for Oil and Grease. The TBELs were a combination of the monthly average and daily maximum mass allowed for the EAF Billet Caster under 40 CFR 420.62/63 and the daily maximum mass allowed for the 12" Bar Mill under 40 CFR 420.72/77(b)(1). Monthly average TBELs are not provided under 40 CFR 420.72/77(b)(1). Through application of BPJ, IDEM has calculated in Attachment III, based on current production, monthly average mass limits for the 12" Bar Mill at 33.33% of the daily maximum. This percentage is based on the TBELs for the EAF Billet Caster for which the monthly average limitation is 33.33% of the daily maximum under 40 CFR 420.62/63. In the Fact Sheet of the 1996 permit, the daily maximum calculated for the 12" Bar Mill under 40 CFR 420.72/77(b)(1) was 234.23 lbs/day and the monthly average allowance for the EAF Billet Caster under 40 CFR 420.62/63 was 15.93 lbs/day. By adding 33.33% of 234.23 lbs/day to 15.93 lbs/day, the BPJ calculation of the

monthly average allowed in the 1996 permit is 94.0 lbs/day. A monthly average Oil and Grease limit of 94.0 lbs/day is being proposed for Internal Outfall 602 for the renewal permit based on what was authorized, but not applied in the current permit. The proposed monthly average and daily maximum TBELs for Internal Outfall 602 will not result in a monthly average Oil and Grease concentration of greater than 10 mg/l at final Outfall 001 at the long-term average discharge flow so the narrative criterion is met. Therefore, the new monthly average limit does not result in a lowering of water quality for Oil and Grease in the Indiana Harbor Canal and antidegradation under 327 IAC 5-2-11.3(a) is satisfied. The new monthly average limit does not allow an increase above what was authorized, but not applied in the current permit. The new TBEL is a new application of Federal Effluent Limitations Guidelines and falls under the antidegradation exemption in 5-2-1.3(b)(1)(C)(ii)(DD). This exemption applies to 5-2-11.7(a)(2) so the new limit does not cause a significant lowering of water quality in the OSRW.

New limits for Mercury are required at Outfall 001 based on a reasonable potential analysis using data collected in 1999 and 2001. Since the previous permit under which Outfall 001 was regulated was last renewed in 1996, more stringent water quality criteria for Mercury have become effective and a new analytical method has become available that allows Mercury in the discharge to be quantified. The new limits for Mercury are a result of the following items in the antidegradation exemption in 5-2-11.3(b)(1)(C)(ii):

(AA) New or improved monitoring data.
(BB) New or improved analytical methods.
(CC) New or modified water quality criteria or values.

The new limits for Mercury are not a result of changes in pollutant loading and will not allow an increase in pollutant loading since the projected effluent quality is greater than the proposed effluent limits and the existing discharge flow was used to calculate the proposed mass limits. Therefore, the new limits for Mercury do not cause a significant lowering of water quality for Mercury and antidegradation under 5-2-11.3(b) is satisfied. Since this same exemption applies to 5-2-11.7(a)(2), the new limits for Mercury do not cause a significant lowering of water quality in the OSRW.

New mass limits for Total Residual Chlorine are required at Outfall 001. The current permit only has concentration limits at this outfall and they are less stringent than the proposed concentration limits. The existing effluent flow was used to calculate the WQBELs for the proposed permit so the new mass limits will not result in a calculated concentration increase outside of the mixing zone under 5-2-11.3(b)(1)(B)(i). Therefore, the new mass limits will not cause a significant lowering of water quality and antidegradation under 5-2-11.3(b) is satisfied. Since the new limits do not cause a significant lowering of water quality under 5-2-11.3(b)(1)(B), they do not cause a significant lowering of water quality in the OSRW in accordance with Non-Rule Policy Document Water-002-NRD.

A complete antidegradation review of the proposed ArcelorMittal permit is included in Table 4. Based on the antidegradation review, the Department has determined that the proposed permit complies with the antidegradation policy found in 2-1.5-4 and an antidegradation demonstration is not required.

The permittee is prohibited from undertaking any deliberate action that would result in a new or increased discharge of a BCC or a new or increased permit limit for a pollutant or pollutant parameter that is not a BCC unless one (1) of the following is completed prior to the commencement of the action; (i) Information is submitted to the commissioner demonstrating that the proposed new or increased discharge will not cause a significant lowering of water quality; (ii) An antidegradation demonstration submitted and approved in accordance with 5-2-11.3.

7. Proposed Effluent Limitations by Outfall

Limits are derived by a comparison of the limits from the previous permit, the calculated federal effluent limitation guideline (ELGs), and the water quality based effluent limitations of which the most stringent is placed in the permit.

Flow

The permittee's flow is to be monitored in accordance with 327 IAC 5-2-13(a)(2).

Total Suspended Solids (TSS)

The mass based limits have been retained from the previously applicable permit. The limits are based on the federal effluent limitation guidelines 420.72/77(b)(1) and 420.62/63 and are applied at internal outfall 602.

Oil & Grease (O&G)

The mass based daily maximum limits have been retained from the previously applicable permit. The limits are based on the federal effluent limitation guidelines 420.72/77(b)(1) and 420.62/63 and are applied at internal outfall 602. Through application of BPJ, IDEM has developed mass based monthly average limits. This was necessary as one of two processes contributing to Outfall 602 has both daily maximum and monthly average mass based limits for Oil & Grease. Therefore, the both daily maximum and monthly average limits must be applied at the outfall. For EAF Billet Caster discharge, the monthly average limitation is 33.33% of the daily maximum. Therefore, the monthly average limit for the 12" Bar Mill was calculated to be 1/3 of the daily maximum as well.

Total Mercury

Total Mercury effluent limitations are based on current Indiana Water Quality Standards and are applied at Outfall 001.

Total Lead

The mass based limits have been retained from the previously applicable permit. The limits are based on the federal effluent limitation guidelines 420.72/77(b)(1) and 420.62/63 and are applied at internal outfall 602.

Total Zinc

The mass based limits are based on the federal effluent limitation guidelines 420.72/77(b)(1) and 420.62/63 are applied at internal outfall 602. The Total Zinc mass limits calculated using updated production data are the more stringent set of limits (as compared to those in the previously applicable permit) therefore, the updated limits are applicable at internal outfall 602.

Temperature

Due to the presence of non-contact cooling water in the discharge, temperature monitoring has been retained from the previously applicable permit. Temperature monitoring is important to ensure the proper operation of the cooling tower system, monitor thermal discharges to the receiving water, and ensure compliance with Indiana Water Quality Standards.

Thermal Output

Due to the presence of non-contact cooling water in the discharge, thermal discharge monitoring has been retained from the previously applicable permit. Thermal discharge monitoring is important to ensure the proper operation of the cooling tower system and to monitor thermal discharges to the receiving water.

Total Residual Chlorine (TRC)

TRC effluent limitations have been determined by current Indiana Water Quality Standards; 327 IAC 2-1.5-8 (Table 8-1), and are applied at Outfall 001.

pH

Limitations for pH are based on 327 IAC 2-1.5-8(c)(2), 40 CFR 420.07, 40 CFR 420.32, and 40 CFR 420.34.

Outfall 001

The discharge from Outfall 001 consists of once-through non-contact cooling water, treated process water from the Electric Furnace/Billet Caster (EC/BC) and 12" Bar Mill (Internal Outfall 602), Electric Arc Furnace slag cooling water, steam condensates, groundwater, and some storm water.

DISCHARGE LIMITATIONS
(for Outfall 001)

Table 1

Parameter	Quantity or Loading Monthly Average	Daily Maximum	Units	Quality or Concentration Monthly Average	Daily Maximum	Units	Monitoring Measurement Frequency	Requirements Sample Type
Flow	Report	Report	MGD	-----	-----	-----	Daily	24 Hr. Total
TSS	Report	Report	lbs/day	Report	Report	mg/l	2 X Week	24 Hr. Comp.
Oil & Grease	Report	Report	lbs/day	Report	Report	mg/l	2 X Week	Grab
Total Lead	Report	Report	lbs/day	Report	Report	ug/l	2 X Week	24 Hr. Comp.
Total Zinc	Report	Report	lbs/day	Report	Report	ug/l	2 X Week	24 Hr. Comp.
Mercury								
Interim	Report	Report	lbs/day	Report	Report	ng/l	6 X Year	Grab
Final	0.000039	0.000096	lbs/day	1.3	3.2	ng/l	6 X Year	Grab
TRC	0.48	1.1	lbs/day	16	37	ug/l	5 X Week	Grab
Temperature								
Effluent	-----	-----	-----	Report	Report	°F	2 X Week	Grab
Intake	-----	-----	-----	Report	Report	°F	2 X Week	Grab
Thermal Discharge	Report	Report	MBtu/hr	-----	-----	-----	2 X Week	Report
Biomonitoring								

Table 2

Parameter	Quality or Concentration Daily Minimum	Daily Maximum	Units	Monitoring Measurement Frequency	Requirements Sample Type
pH	6.0	9.0	s.u.	2 X Week	Grab

Internal Outfall 602

Outfall 602 is the internal process wastewater outfall for the EF/BC and 12" Bar Mill process wastewater treatment systems. The treated wastewaters are limited and monitored prior to mixing with non-contact cooling water and discharges to the Indiana Harbor Ship Canal via Outfall 001.

DISCHARGE LIMITATIONS
(for Outfall 602)

Table 1

	Quantity or Loading			Quality or Concentration			Monitoring	Requirements
Parameter	Monthly Average	Daily Maximum	Units	Monthly Average	Daily Maximum	Units	Measurement Frequency	Sample Type
Flow	Report	Report	MGD	-----	-----	-----	2 X Week	24 Hour Tota
TSS	404	1095	lbs/day	Report	Report	mg/l	2 X Week	24 Hr. Comp.
O & G	94.0	282	lbs/day	Report	Report	mg/l	2 X Week	Grab
Total Lead	0.26	0.60	lbs/day	Report	Report	ug/l	2 X Week	24 Hr. Comp.
Total Zinc	0.74	2.23	lbs/day	Report	Report	ug/l	2 X Week	24 Hr. Comp.

F. Special NPDES Permit Conditions and Monitoring Programs

The permit contains a number of special conditions and monitoring programs in addition to the effluent limitations and routine monitoring requirements. Reference is made to the permit for the specific requirements of each program.

1. Stormwater Requirements

Outfalls 020, 021, 022 are storm water only outfalls. There is also a low volume discharge from ground water infiltration into the sewers.

Outfall 020 is a 48-inch pipe that collects storm water runoff from the north side of the east building of the 12-inch Mill and some runoff from the scrap metal stock pile and trailer area. Outfall 020 has a small quantity of groundwater infiltration entering the sewer system and discharging from this source.

Outfall 021 is a 42-inch pipe that collects storm water runoff from the roof drains on the south side of the 12-inch Mill Shipping bays, roof drains from the north side of the Shipping, and the Scrap Preparation Area. This area also has some runoff from construction trailers located along the Indiana Harbor Ship Canal. Outfall 021 has a small quantity of groundwater infiltration entering the sewer system and discharging from this source.

Outfall 022 is a 36-inch pipe. It collects storm water runoff from the roof drains on the north side of the old Open Hearth Building and the parking lots and transfer station located along Dickey Road. Outfall 022 has a small quantity of groundwater infiltration entering the sewer system and discharging from this source.

A review of the current requirements for storm water monitoring is on a semi-annual basis. Part I. E. of the permit details the specific parameters and outfalls where these sampling and monitoring requirements are to be implemented. EPA has determined that non-numeric Technology-Based Effluent Limits have been determined to be equal to BPT/BAT/BCT for Stormwater associated with industrial activity. The Non-Numeric Stormwater Conditions and Effluent Limits contain the technology-based effluent limitations. Effective implementation of these requirements should meet the applicable water quality based effluent limitations. The non-numeric requirements of the permit contain effluent limitations, defined in the CWA as restrictions on quantities, rates, and concentrations of constituents which are discharged. Violation of any of these effluent limitations constitutes a violation of the permit.

The technology-based effluent limitations require the permittee to minimize exposure of raw, final, or waste materials to rain, snow, snowmelt, and runoff. In doing so, the permittee is required, to the extent technologically available and economically practicable and achievable, to either locate industrial materials and activities inside or to protect them with storm resistant coverings. In addition, the permittee is required to: (1) use good housekeeping practices to keep exposed areas clean, (2) regularly inspect, test, maintain and repair all industrial equipment and systems to avoid situations that may result in leaks, spills, and other releases of pollutants in stormwater discharges, (3) minimize the potential for leaks, spills and other releases that may be exposed to stormwater and develop plans for effective response to such spills if or when they occur, (4) stabilize exposed area and contain runoff using structural and/or non-structural control measures to minimize onsite erosion and sedimentation, and the resulting discharge of pollutants, (5) divert, infiltrate, reuse, contain or otherwise reduce stormwater runoff, to minimize pollutants in your discharges, (6) enclose or cover storage piles of salt or piles containing salt used for deicing or other commercial or industrial purposes, including maintenance of paved surfaces, (7) train all employees who work in areas where industrial materials or activities are exposed to stormwater, or who are responsible for implementing activities necessary to meet the conditions of this permit (e.g., inspectors, maintenance personnel), including all members of your Pollution Prevention Team, (8) ensure that waste, garbage and floatable debris are not discharged to receiving waters by keeping exposed areas free of such materials or by intercepting them before they are discharged, and (9) minimize generation of dust and off-site tracking of raw, final or waste materials.

To meet the non-numeric effluent limitations in Part I.E.5, the permit requires the permittee to select control measures (including best management practices) to address the selection and design considerations in Part I.E.4. The permittee must control its discharge as necessary to meet applicable water quality standards. It is expected that compliance with the technology-based effluent limitations and other terms and conditions in this permit will meet this effluent limitation. However, if at any time the permittee, or IDEM, determines that the discharge causes or contributes to an exceedance of applicable water quality standards, the permittee must take corrective actions, and conduct follow-up monitoring.

In addition to the non-numeric effluent limitations, IDEM has implemented a baseline monitoring requirement for specific parameters to demonstrate progress of control measures at the facility. Historic data (collected for storm water outfalls under IN0000094) will be used to determine the baseline concentration for the parameters and subsequent measurements will demonstrate the overall effectiveness of the control measures implemented at the site and will

assist the permittee in knowing when additional corrective action(s) may be necessary to comply with the provisions in Part I.E.5 of the permit.

Stormwater monitoring data collected during the permit term shall be compared to the baseline concentrations semi-annually to determine if the control measures being implemented at the site result in an improvement from the baseline established by the permittee. If the sample results exceed the baseline concentration, the permittee must take corrective actions in Part I.E.7 of the permit. Follow-up sampling should occur as soon as possible after implementation of corrective actions.

An exceedance of a baseline concentration is not a permit violation. However, failing to take the corrective actions in Part I.E.7 as a result of a baseline concentration exceedance is a violation of the permit. The permittee shall strive for continuous improvement from the baseline until it has been demonstrated that the permittee has implemented the best management practice to meet the provisions in Part I.E.5. of this permit.

Part I.E.6 of the permit was added to require an annual review of the selection, design, installation, and implementation of the control measures to determine if modifications are necessary to meet the effluent limitations in the permit. This annual review will reinforce the continuous improvement of stormwater discharges. While this approach is different than EPA's benchmarking process where a monitoring result exceeding a benchmark triggers the review of the selection, design, installation, and implementation of the control measures, the permittee is required to review the selection, design, installation, and implementation of the control measures annually whether or not the monitoring results exceed a baseline concentration. Failing to conduct the annual review of the selection, design, installation, and implementation of the control measures and reporting the results to Industrial Permit Section is a violation of the permit. The permittee shall retain any and all records related to this documentation within the SWP3. In addition, this same information must also be submitted to the Industrial NPDES Permit Section on an annual basis.

"Terms and Conditions" to Provide Information in a SWP3

Distinct from the effluent limitation provisions in the permit, the permit requires the discharger to prepare a Stormwater Pollution Prevention Plan (SWP3) for its facility. The SWP3 is intended to document the selection, design, installation, and implementation (including inspection, maintenance, monitoring, and corrective action) of control measures being used to comply with the effluent limits set forth in Part I.E. of the permit. In general, the SWP3 must be kept up-to-date, and modified whenever necessary to reflect any changes in control measures that were found to be necessary to meet the effluent limitations in this permit.

The requirement to prepare a SWP3 is not an effluent limitation, rather it documents what practices the discharger is implementing to meet the effluent limitations in Part I.E. of the permit. The SWP3 is not an effluent limitation because it does not restrict quantities, rates, and concentrations of constituents which are discharged. Instead, the requirement to develop a SWP3 is a permit "term or condition" authorized under sections 402(a)(2) and 308 of the Act. Section 402(a)(2) states, "[t]he Administrator shall prescribe conditions for [NPDES] permits to assure compliance with the requirements of paragraph (1) of this subsection, including conditions on data and information collection, reporting, and such other requirements as he

deems appropriate." The SWP3 requirements set forth in this permit are terms or conditions under the CWA because the discharger is documenting information on how it intends to comply with the effluent limitations (and inspection and evaluation requirements) contained elsewhere in the permit. Thus, the requirement to develop a SWP3 and keep it updated is no different than other information collection conditions, as authorized by section 402(a)(2), in other permits.

2. Pollutant Minimization Program

This permit contains water quality-based effluent limits for Total Residual Chlorine at Outfall 001. The permittee is required to develop and conduct a pollutant minimization program (PMP) for each pollutant with a WQBEL below the LOQ, therefore the permittee is required to develop and conduct a PMP for TRC.

3. Schedule of Compliance

The Reasonable Potential to exceed water quality based effluent limits analysis identified Mercury in the effluent from Outfall 001 to have the potential to exceed the final effluent limitations in the permit. Based on the limited nature of the available data, the Indiana Harbor Long Carbon facility may not be able to assure 100% compliance with the new WQBEL effluent limits for these metals at the time the renewal NPDES permit is issued. Therefore, the proposed permit is eligible to contain a schedule of compliance for the new water quality-based effluent limitations for Mercury at Outfall 001. The schedule of compliance requires ArcelorMittal to develop a plan to identify the source(s) of mercury in the wastewater and develop a plan to achieve compliance with the final effluent limits and implement the plan within 24 months after the plan to collect data and information regarding pollution prevention and treatment has been approved.

ArcelorMittal does not intentionally introduce Mercury at the Indiana Harbor Long Carbon facility as raw materials, process additives, alloying elements or in any significant manner in the basic steel making or steel finishing processes. The exact source(s) are currently unknown. Given these circumstances, the following compliance schedule regarding the final effluent limits for Mercury is proposed. The permittee shall achieve compliance with the effluent limitations specified for Mercury at Outfall 001 as soon as possible but no later than Fifty-four (54) months from the effective date of this permit in accordance with the following schedule:

1. The permittee shall submit a written Quality Assurance Project Plan (QAPP) to identify the sources of Mercury to the Compliance Data Section of the Office of Water Quality (OWQ) no later than three (3) months from the effective date of this permit. IDEM will provide any comments within 30 days of receipt of the QAPP. If comments are made, IDEM will provide the permittee with the opportunity to discuss any comments prior to implementation of the QAPP. If IDEM does not comment within 30 days of its receipt of the QAPP, the permittee may proceed with implementation as set forth in the QAPP. The QAPP shall include a description of the method(s) selected for identifying the sources of Mercury in addition to any other relevant information. The QAPP shall include a specific time line specifying when each of the steps will be taken. The new Outfall 001 effluent limits for Mercury are deferred for the term of this compliance schedule, unless the effluent limits can be met at an earlier date. The

permittee shall notify the Compliance Data Section of OWQ as soon as the effluent limits for Mercury can be met. Upon receipt of such notification by OWQ, the final limits for Mercury will become effective, but no later than Fifty-four (54) months from the effective date of this permit. Monitoring and reporting of the Outfall 001 effluent for these parameters is required during the interim period. The QAPP shall address, at a minimum, the following:

a. Identification of the sampling locations that will be utilized to evaluate potential sources of Mercury to Outfall 001 (current and historic).
b. Development of a sampling plan to identify sources of Mercury.
c. Assessment of the potential pollution prevention activities for Mercury at the facility. The assessment should include a methodology for determining the feasibility of eliminating or reducing Mercury from the internal wastestreams identified for inclusion in the sampling plan.

2. The permittee shall submit a report to the Compliance Data Section of OWQ no later than Fifteen (15) months from the effective date of this permit. This report shall include detailed information on:

a. All sampling conducted during the previous 12 months for Mercury including all analytical results obtained up to the time of the report.
b. A description of any pollution prevention activities implemented as a result of the sampling results (such as replacement of raw or intermediate products containing excessive quantities of Mercury) that reduce or eliminate the addition of Mercury into Outfall 001.

3. The permittee shall submit a QAPP report to the Compliance Data Section of OWQ no later than 27 months from the effective date of this permit. This report shall include detailed information on:

a. The results of all sampling performed during the previous 24 months to evaluate potential sources of Mercury to Outfall 001.
b. The evaluation of short-term and long-term control measures, including, but not limited to, best management practices, pollution prevention activities and treatment technologies that will reduce the concentration of Mercury in the effluent from Outfall 001.
c. A description of any control measures that were identified and implemented during the previous 24 months.
d. Any proposed or actual construction of additional treatment technology to reduce the concentration of Mercury in the effluent from Outfall 001.
e. The anticipated date when the permittee will submit the Final Plan for Compliance (FPC) for the final effluent limits for Mercury.

4. The permittee shall submit a proposed Final Plan for Compliance (FPC) containing the source identification report for Mercury and the plan for implementing pollution prevent or installing treatment where feasible to achieve compliance with the final limits for Mercury no later than thirty (30) months after the effective date of this permit. IDEM will provide any comments within 30

days of receipt of the FPC. If comments are made, IDEM will provide the permittee with the opportunity to discuss the comments prior to implementation. If IDEM does not comment within 30 days of its receipt of the FPC, the permittee may proceed with implementation as set forth in the FPC.

5. The permittee shall submit a report to the Compliance Data Section of OWQ no later than Thirty-Nine (39) months from the effective date of this permit. This report shall include detailed information on:

   a. The implementation of pollution prevention activities such as replacement of raw or intermediate products containing excessive quantities of Mercury; or production practices that reduce or eliminate the addition of Mercury into the wastewater.
   b. The construction of treatment technology identified in the FPC for the reduction of Mercury in the effluent from Outfall 001
   c. the achievement of milestones identified in the FPC.
   d. the anticipated date when the discharge from Outfall 001 can achieve compliance with the final effluent limits for Mercury.

6. The permittee shall submit a progress report to the Compliance Data Section of OWQ no later than Forty-Eight (48) months from the effective date of this permit. This report shall include detailed information on:

   a. The implementation of pollution prevention activities such as replacement of raw or intermediate products containing excessive quantities of Mercury; or production practices that reduce or eliminate the addition of Mercury into the wastewater.
   b. The construction of treatment technology identified in the FPC for the reduction of Mercury in the effluent from Outfall 001
   c. the achievement of milestones identified in the FPC.
   d. the anticipated date when the discharge from Outfall 001 can achieve compliance with the final effluent limits for Mercury.

7. Within thirty (30) days of completion of any additional pollutant control equipment, the permittee shall file with the Industrial NPDES Permits Section of OWQ a notice of installation for the additional pollutant control equipment and a design summary of any modifications.

8. The permittee shall comply with the final effluent limitations for Mercury at Outfall 001 no later than Fifty-four (54) months from the effective date of this permit.

9. If the permittee fails to comply with any deadline contained in the foregoing schedule, the permittee shall, within fourteen (14) days following the missed deadline, submit a written notice of noncompliance to the OWQ stating the cause of noncompliance, and remedial action taken or planned, and the probability of meeting the date fixed for compliance with final effluent limitations.

4. Free Cyanide and Fluoride

Based on the presence of **Free Cyanide** on the 2010 303(d) list for the Indiana Harbor, monitoring for Free Cyanide is being included at all ArcelorMittal outfalls containing process wastewater. Under 5-2-11.5(e), the commissioner may require monitoring for a pollutant of concern even if it is determined that a WQBEL is not required based on a reasonable potential determination. Monitoring was added for **Fluoride** due to the inclusion of this pollutant in the multi-discharger wasteload allocation.

The permittee shall establish a monitoring program to establish a data base for the parameters listed below at Outfall 001. The information gathered from the monitoring program will aid in the next NPDES permit renewal and shall be submitted to IDEM with the next renewal application. The monitoring program will consist of twelve (12) consecutive months of data. The monitoring program will begin no later than the thirty-sixth (36) month from the effective date of the permit and will last for twelve (12) consecutive months.

	Quantity or Loading			Quality or Concentration			Monitoring	Requirements
Parameter	Monthly Average	Daily Maximum	Units	Monthly Average	Daily Maximum	Units	Measurement Frequency	Sample Type
Cyanide, Free[1]	Report	Report	lbs/day	Report	Report	mg/l	2 X Month	Grab
Fluoride	Report	Report	lbs/day	Report	Report	mg/l	2 X Month	24 Hr. Comp

[1] Sample preservation procedures and maximum allowable holding times for total cyanide, or available (free) cyanide are prescribed in Table II of 40 CFR Part 136. Note the footnotes specific to cyanide. Preservation and holding time information in Table II takes precedence over information in specific methods or elsewhere.

Parameter	Test Method	LOD	LOQ
Cyanide, Free	4500-CN-G	5 ug/l	16 ug/l
Cyanide, Free	1677	0.5 ug/l	1.6 ug/l

5. Zebra and Quagga Mussel Control

As a means of controlling Zebra and Quagga Mussel colonization within the ArcelorMittal Steel Indiana Harbor Long Carbon, the permittee chlorinates intake water on a continuous basis during a portion of each year. Wastewater shall be dechlorinated prior to discharge from external Outfall 001. The discharge from this outfall shall have limitations and monitoring requirements for Total Residual Chlorine (TRC) to meet compliance with the TRC requirements.

6. Groundwater Remediation Project

"Compatible Treated Wastewater from Groundwater Remediation Project" for purposes of this permit means groundwaters that are contaminated with pollutants that are limited at the respective wastewater treatment facilities. Other groundwaters shall be pretreated prior to introduction to the respective wastewater treatment facilities to remove or treat those pollutants that are not limited or that cannot be effectively removed or treated at the respective wastewater treatment facilities.

The permittee shall notify IDEM prior to the date it desires to introduce compatible or pretreated groundwaters from any groundwater remediation project to wastewater treatment facilities at ArcelorMittal Steel USA, Inc.- Indiana Harbor Long Carbon. Such notification shall include the volume of groundwater to be treated and discharged; a description of any groundwater pretreatment facilities; the identity of the receiving wastewater treatment facility and permitted outfall; identification, concentrations and mass loadings of containments in the untreated groundwater; identification, and expected concentrations and mass loadings of containments in the pretreated groundwater prior to introduction of groundwater to the wastewater treatment facilities; and, identification and expected concentrations and mass loadings of groundwater contaminants to be discharged from the wastewater treatment facilities. IDEM shall evaluate the information submitted to determine if a permit modification is required under 327 IAC 5-2-16. Discharge of this waste stream shall not commence until ArcelorMittal Steel USA, Inc. has received written approval from IDEM

7. Reporting Requirements for Solvents, Degreasing Agents, Rolling Oils, Water Treatment Chemical, and Biocides

The permittee will maintain the following information on site, and report to IDEM if requested; the total quantity (lbs/year) of each solvent, degreasing agent, rolling oil, water treatment chemical, and biocide that was purchased for that year and which can be present in any outfall regulated by this permit. This requirement includes all surfactants, anionic, cationic, and non-ionic, which may be used in part or wholly as a constituent in these compounds.

8. Water Treatment Additives

In the event that changes are to be made in the use of water treatment additives that could significantly change the nature of, or increase the discharge concentration of the additive contributing to Outfall 011, the permittee shall notify the Indiana Department of Environmental Management as required in Part II.C.1 of this permit. The use of any new or changed water treatment additives or dosage rates shall not cause the discharge from any permitted outfall to exhibit chronic or acute toxicity. Acute and chronic aquatic toxicity information must be provided with any notification regarding any new or changed water treatment additives or dosage rates. The following water treatment additives have been approved for use:

Plant Location	Chemical/Product	Purpose
Caster	3DT177	Corrosion, scale
	3DT190	Corrosion inhibitor
	71D5 Plus	Antifoam
	8108 Plus	Filter Aid
Bar Mill	3DT177	Corrosion, scale
	3DT190	Corrosion inhibitor
	8187	Emulsion breaker, water clarification solids removal
	8157	Solids Removal
	7766 Plus	Sludge Removal
Mold	Trac109	Corrosion inhibitor

	7320	Non oxidizing Biocide
EMS	Trac104	Corrosion inhibitor
	7320	Non oxidizing Biocide
Zebra Mussel	Y302611	Chlorine Scavenger
Outfall 001	Shellzone	Freeze Protection

9. Biocides Concentration

The permittee must receive written permission from the IDEM if they desire to use any biocide or molluscicide other than chlorine in once through cooling water. The use of any biocide containing tributyl tin oxide in any closed or open cooling system is prohibited.

10. Polychlorinated Biphenyl

There shall be no discharge of polychlorinated biphenyl (PCBs) compounds such as those commonly used for transformer fluid.

11. Cooling Water Intake Structures

Section 316(b) of the federal Clean Water Act requires that facilities minimize adverse environmental impact resulting from the operation of cooling water intake structures (CWIS) by using the "best technology available" (BTA). U.S. EPA has promulgated rules to implement these requirements for new facilities (Phase I rules), large, existing power plants (Phase II rules) which are currently remanded, and offshore oil and gas extraction facilities (Phase III rules), and that implementation must take place through the issuance of NPDES permits. However, there is a large universe of facilities which are not specifically addressed by the rules, including:

New facilities with a CWIS design flow less than 2 MGD;
Existing power plants with a CWIS design flow less than 50 MGD; and
Manufacturing facilities such as existing steel mills, paper mills, etc. with a surface water intake that use at least a portion of their intake flow for cooling purposes.

U.S. EPA has recently emphasized that all of these facilities, including those not specifically addressed by rules must be evaluated for 316(b) compliance. 40 C.F.R. §125.90(b) directs permitting authorities to establish 316(b) requirements on a best professional judgment (BPJ) basis for existing facilities not subject to categorical section 316(b) regulations (Phase I, II (currently remanded) or III rules. IDEM is required to make a BTA determination using BPJ so the permit will comply with the federal regulation.

The ArcelorMittal Indiana Harbor Long Carbon facility service water is provided from the ArcelorMittal Indiana Harbor East Main Intake (No. 2 Pump House). This CWIS is under the control of ArcelorMittal Indiana Harbor East and will continue to be regulated under IN0000094. NPDES Permit IN0000094 contains IDEM's BTA determination.

G. Permit Processing/Public Comment/Appeal Process

Pursuant to IC 13-15-5-1, IDEM will publish a general notice in the newspaper with the largest general circulation within the above county. A 30-day comment period is available in order to solicit input from interested parties, including the general public. Comments concerning the draft permit should be submitted in accordance with the procedure outlined in the enclosed public notice form.

Attachment I

Facility Outfall Location Map

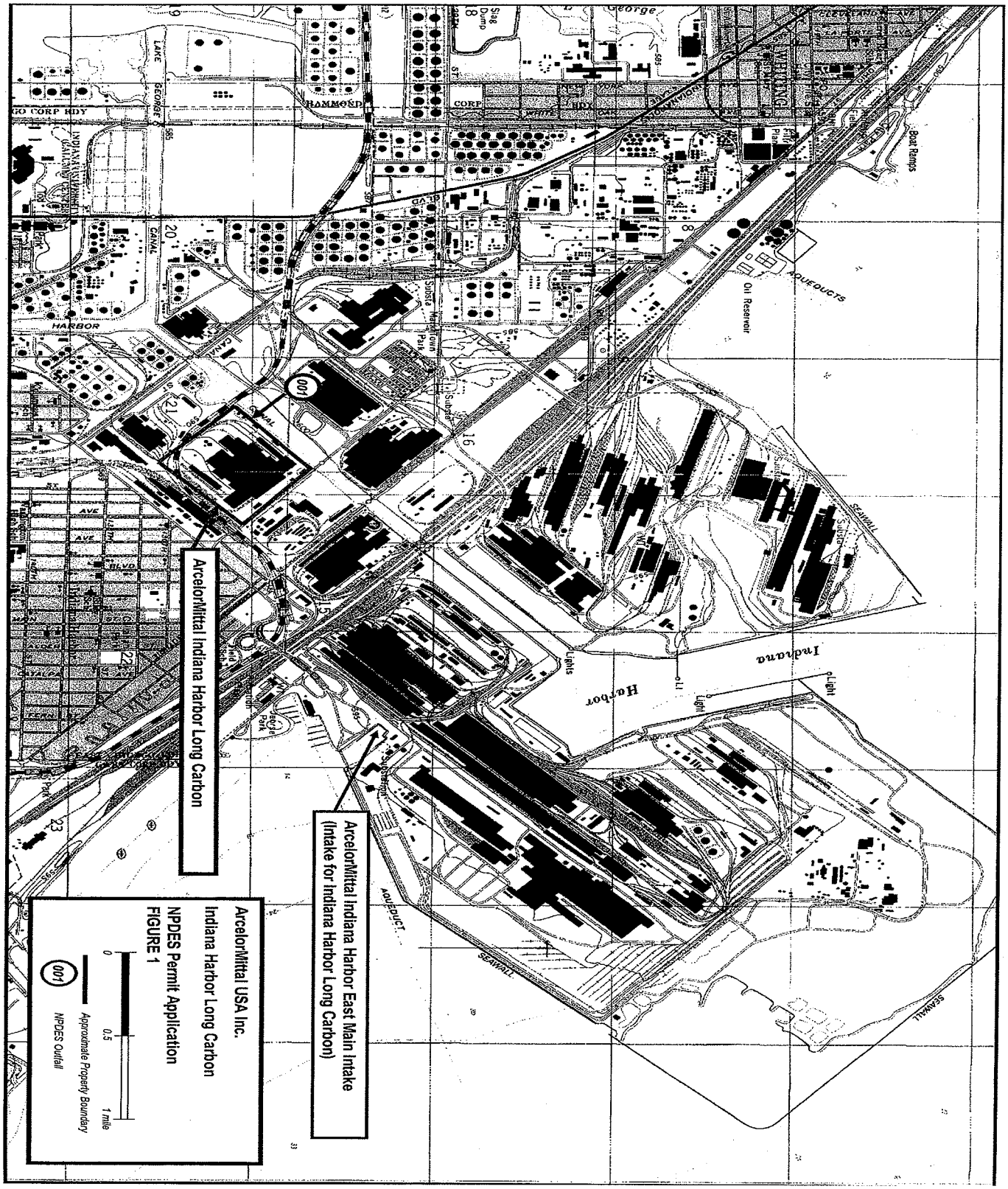

Attachment II

Outfall Line Discharge Drawing

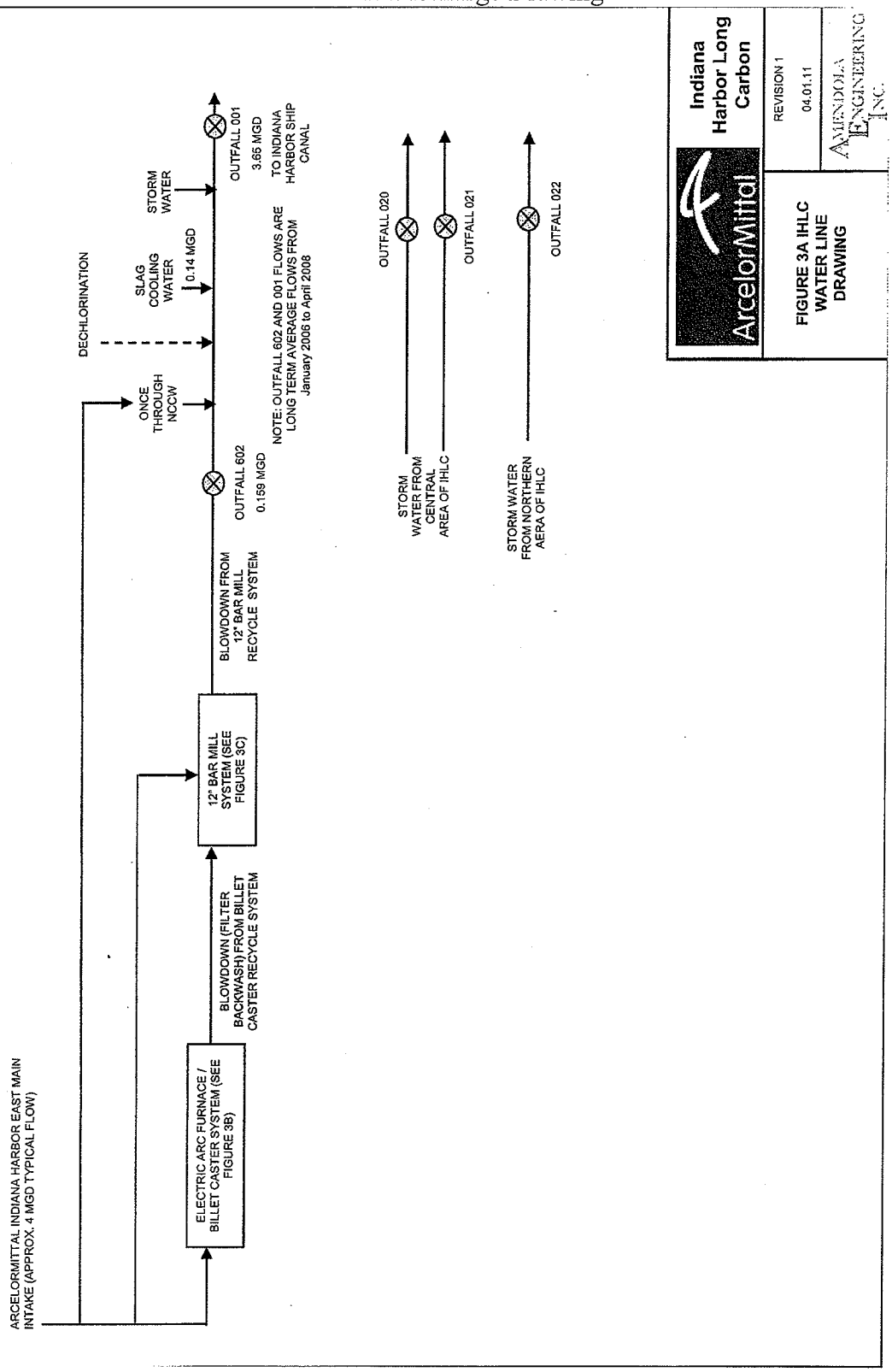

Attachment III
Technology-Based Effluent Limitations

OUTFALL 602 TECHNOLOGY BASED EFFLUENT LIMITATIONS

Production Unit	Production (tons/day)		TSS		Oil & Grease*		Total Lead		Total Zinc	
			Monthly Avg	Daily Max	Monthly Avg	Daily Max	Monthly Avg	Daily Max	Monthly Avg	Daily Max
EAF Billet Caster		ELG (lbs per 1000 lbs product)	0.026	0.078	0.0078	0.0234	0.0000313	0.0000939	0.0000469	0.000141
Continuous Casting 420.62/63	2066.6	Mass Limit (pounds)	107.46	322.39	32.24	96.72	0.13	0.39	0.19	0.58
12" Bar Mill		ELG (lbs per 1000 lbs product)	0.134	0.357	0.0298	0.0894	0.0000834	0.00025	0.000125	0.000375
Hot Forming Section 420.72/77 (b)(1)	2199	Mass Limit (pounds)	589.33	1570.09	131.06	393.18	0.37	1.10	0.55	1.65
Outfall 602 Total		Mass Limit (pounds)	696.80	1892.48	163.30	489.90	0.50	1.49	0.74	2.23

*BPJ determination for Monthly Average Oil & Grease.

TABLE 1 REASONABLE POTENTIAL TO EXCEED ARCELORMITTAL USA - INDIANA HARBOR LONG CARBON OUTFALL 001 (3.6 mgd)

PARAMETER	MONTHLY AVERAGE					DAILY MAXIMUM					PEL		PEQ > PEL	
	Maximum Effluent Value	Count	C.V.	M.F.	PEQ	Maximum Effluent Value	Count	C.V.	M.F.	PEQ	Monthly Average@	Daily Maximum	Monthly Average	Daily Maximum
Lead (ug/l) *	15	59	0.7	1.0	**15**	115	632	1.7	0.8	**92**	**46**	**92**	No	No
Mercury (ng/l) **					**3.6**	1.21	3	0.6	3.0	**3.6**	**1.3**	**3.2**	**Yes**	**Yes**
Zinc (ug/l) *	61	59	0.6	1.0	**61**	197	632	1.2	0.8	**160**	**80**	**160**	No	No
Chloride (mg/l) $	15.9	2	0.6	3.8	**60**	18.5	8	0.6	1.9	**35**	**66**	**130**	No	No
Fluoride (mg/l) $	0.71	2	0.6	3.8	**2.7**	0.81	7	0.6	2.0	**1.6**	**2.7**	**5.4**	No	No
Sulfate (mg/l) $	27.9	2	0.6	3.8	**110**	34.4	8	0.6	1.9	**65**	**120**	**250**	No	No
Ammonia-N (mg/l) # :														
Summer %					**0.42**	0.16	4	0.6	2.6	**0.42**	**0.57**	**1.1**	No	No
Winter %					**0.11**	0.063	9	0.6	1.8	**0.11**	**0.57**	**1.1**	No	No

* Effluent data were obtained from MMRs for the period July 2005 through June 2010.

Lead and zinc data collected in August 2009 were excluded as ouliers due to operational issues during the shutdown of the plant.

** Effluent data were obtained from the July 1999 and August 2001 TMDL studies and from the December 2008 Form 2C.

$ Effluent data were obtained from the ArcelorMittal 6-week chemicals and toxic metals monitoring program in 1996, and the July 1999 and April 2000 TMDL studies.

Effluent data were obtained from the July 1996 through June 1997 one year oxygen demand monitoring program, and the July 1999 and April 2000 TMDL studies.

% Summer months are July through September, and winter months are October through June.

@ Monthly average PELs were calculated based on the applicable sampling frequency in a month.

4/25/2011

TABLE 2

REASONABLE POTENTIAL TO EXCEED FOR WHOLE EFFLUENT TOXICITY
ARCELORMITTAL USA - INDIANA HARBOR LONG CARBON

Outfall 001*

Parameter	Maximum Effluent Value	Count	C.V.	M.F.	PEQ	WLA	PEQ>WLA	WQBEL	
								Monthly Average	Daily Maximum
Acute WET (TUa)	<1.0	8	0.6	1.9	<1.9	1.0	NO	--	Not Required
Chronic WET (TUc)	N.A.								

* Data Sources:
001 - October 1996 to May 1998 data collected in accordance with the June 1996 permit.
N.A. : The existing NPDES permit only required acute toxicity testing.

4/25/2011

TABLE 3
WATER QUALITY-BASED EFFLUENT LIMITATIONS
FOR ARCELORMITTAL USA - INDIANA HARBOR LONG CARBON

Parameter	Quantity or Loading			Quality or Concentration		
	Monthly Average	Daily Maximum	Units	Monthly Average @	Daily Maximum	Units
Outfall 001 (3.6 mgd)						
Lead	1.4	2.8	lbs/day	46	92	ug/l
Mercury	0.000039	0.000096	lbs/day	1.3	3.2	ng/l
Zinc	2.4	4.8	lbs/day	80	160	ug/l
Total Residual Chlorine	0.48	1.1	lbs/day	16	37	ug/l
Whole Effluent Toxicity (WET)						
Acute #					1.0	TUa
Chronic &				17.3		TUc

@ Monthly average WQBELs were calculated based on the applicable sampling frequency in a month.
# This value is the Toxicity Reduction Evaluation (TRE) trigger for acute WET testing.
& This value is the Toxicity Reduction Evaluation (TRE) trigger for chronic WET testing.

4/25/2011

TABLE 4
ANTIDEGRADATION
FOR ARCELORMITTAL USA - INDIANA HARBOR LONG CARBON

Parameter	Existing Permit Limits				Proposed Permit Limits				New or Increased Permit Limit for a Non-BCC or New or Increased Loading of a BCC?			
	Loading (lbs/day)		Concentration (ug/l)		Loading (lbs/day)		Concentration (ug/l)		Loading (lbs/day)		Concentration (ug/l)	
	Monthly Average	Daily Maximum	Monthly Average	Daily Maximum	Monthly Average	Daily Maximum	Monthly Average	Daily Maximum	Monthly Average	Daily Maximum	Monthly Average	Daily Maximum
Outfall 001 (3.6 mgd)												
Total Suspended Solids	Report	Report	Report	Report	Report	Report	Report	Report				
Oil & Grease	Report	Report	Report	Report	Report	Report	Report	Report				
Lead	Report	Report	Report	Report	Report	Report	Report	Report				
Mercury	--	--	--	--	0.000039	0.000096	0.0013	0.0032	New (1)	New (1)	New (1)	New (1)
Zinc	Report	Report	Report	Report	Report	Report	Report	Report				
Fluoride	--	--	--	--	Report	Report	Report	Report				
Free Cyanide	--	--	--	--	Report	Report	Report	Report				
Total Residual Chlorine	--	--	20	40	0.48	1.1	16	37	New (2)	New (2)	No	No
Temperature (°F)	--	--	Report	Report	--	--	Report	Report				
Thermal Discharge (BTU/Hr.)	--	Report	--	--	Report	Report	--	--				
pH (s.u.)	--	--	6.0 - 9.0		--	--	6.0 - 9.0				No	
Internal Outfall 602												
Total Suspended Solids	404	1,095	Report	Report	404	1,095	Report	Report	No	No		
Oil & Grease	--	282	Report	Report	94.0	282	Report	Report	New (3)	No		
Lead	0.26	0.60	Report	Report	0.26	0.60	Report	Report	No	No		
Zinc	0.75	2.25	Report	Report	0.74	2.23	Report	Report	No	No		

Footnotes:

Significant Lowering of Water Quality?

(1) The new limits for mercury are based on a reasonable potential analysis using effluent monitoring data. The new limits fall under the antidegradation exemption in 327 IAC 5-2-11.3(b)(1)(C)(ii) so they do not cause a significant lowering of water quality and antidegradation under 327 IAC 5-2-11.3(b) is satisfied. This exemption also applies to 327 IAC 5-2-11.7(a)(2) so the new limits do not cause a significant lowering of water quality in the OSRW.

(2) The current permit has a concentration limit for this parameter that is less stringent than a WQBEL in the proposed permit. The existing effluent flow was used to calculate the WQBELs for the proposed permit so the new limit will not result in a calculated concentration increase outside of the mixing zone under 327 IAC 5-2-11.3(b)(1)(B)(i) and antidegradation under 327 IAC 5-2-11.3(b) is satisfied. Since the new limit does not cause a significant lowering under 327 IAC 5-2-11.3(b)(1)(B), it does not cause a significant lowering in the OSRW in accordance with Non-Rule Policy Document Water-002-NPD.

(3) A new monthly average TBEL for oil and grease is being applied in the proposed permit. The Fact Sheet of the 1996 permit includes the calculation of monthly average and daily maximum TBELs for oil and grease. The TBELs were a combination of the monthly average and daily maximum mass allowed for the EAF Billet Caster under 40 CFR 420.62/63 and the daily maximum mass allowed for the 12" Bar Mill under 40 CFR 420.72/77(b)(1). Monthly average TBELs are not provided for the 12" Bar Mill under 40 CFR 420.72/77(b)(1). Through application of BPJ, IDEM has calculated monthly average mass limits for the 12" Bar Mill at 33.33% of the daily maximum based on the TBELs for the EAF Billet Caster for which the monthly average limitation is 33.33% of the daily maximum under 40 CFR 420.62/63. In the Fact Sheet of the 1996 permit, the daily maximum calculated for the 12" Bar Mill under 40 CFR 420.72/77(b)(1) was 234.23 lbs/day and the monthly average allowance for the EAF Billet Caster under 40 CFR 420.62/63 was 15.93 lbs/day. By adding 33.33% of 234.23 lbs/day to 15.93 lbs/day, the BPJ calculation of the monthly average allowed in the 1996 permit is 94.0 lbs/day. The new limit does not allow an increase above what was authorized, but not applied in the current permit. The monthly average TBEL does not result in a monthly average oil and grease concentration of greater than 10 mg/l at Outfall 001 to meet the narrative criterion. This will ensure that the new limit does not result in a lowering of water quality for oil and grease in the Indiana Harbor Canal and antidegradation under 327 IAC 5-2-11.3(a) is satisfied. The new TBEL falls under the antidegradation exemption in 327 IAC 5-2-11.3(b)(1)(C)(ii)(DD). This exemption applies to 327 IAC 5-2-11.7(a)(2) so the new limit does not cause a significant lowering of water quality in the OSRW.

4/25/2011

Attachment V

Treatment System Line Drawings; 12" Bar Mill Treatment and Recycle System

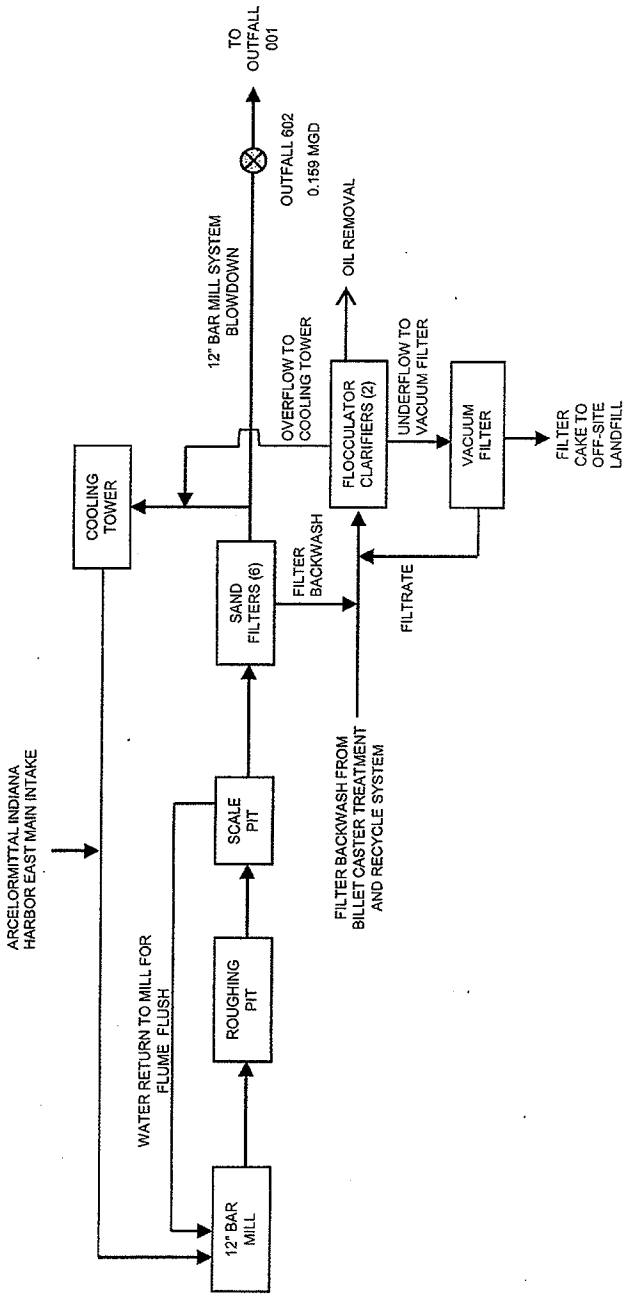

ArcelorMittal

Indiana Harbor Long Carbon

REVISION 1

04.01.11

AMENDOLA ENGINEERING INC.

FIGURE 3C 12" BAR MILL TREATMENT AND RECYCLE SYSTEM

Billet Caster Treatment and Recycle System

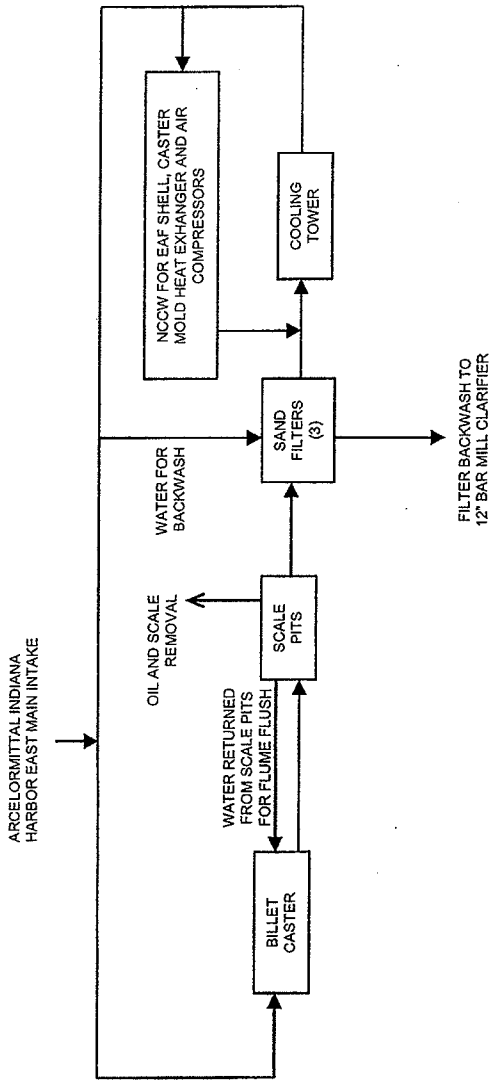

ArcelorMittal

Indiana Harbor Long Carbon

FIGURE 3B BILLET CASTER TREATMENT AND RECYCLE SYSTEM

REVISION 1

04.01.11

AMENDOLA ENGINEERING INC.