National Pollutant Discharge Elimination System
FACT SHEET
for
ArcelorMittal Indiana Harbor, LLC – Central Wastewater Treatment Plant
August 2011

Indiana Department of Environmental Management

100 North Senate Avenue
Indianapolis, Indiana 46204
(317) 232-8603
Toll Free (800) 451-6027
www.idem.IN.gov

Permittee:	ArcelorMittal Indiana Harbor, LLC - Central Wastewater Treatment Plant 3001 Dickey Road East Chicago, Indiana 46312
Existing Permit Information:	This is a New NPDES Permit
Source Contact:	Wendell Carter (219)391-2834
Source Location:	Indiana Harbor West 3001 Dickey Road East Chicago, Indiana Lake County
Receiving Stream:	Indiana Harbor Ship Canal
Proposed Action:	New Permit: IN0063711 Date Application Received: June 4, 2009
Source Category	NPDES Major – Industrial
Permit Writer:	Richard Hamblin (317)232-8696 or rhamblin@idem.in.gov

Table of Contents

1.0 Introduction **3**
2.0 Facility description **3**
2.1 General 3
2.2 Outfall Locations 4
2.3 Wastewater Treatment 4
2.4 Changes in Operation 5
2.5 Facility Storm Water 6
3.0 Compliance History **6**
4.0 Receiving Water **6**
4.1 Receiving Stream Water Quality 6
5.0 Permit limitations **7**
5.1 Existing Permit Limits (IN0000205) 7
5.2 Technology-Based Effluent Limits 8
5.3 Water Quality-Based Effluent Limits 17
5.4 Whole Effluent Toxicity 18
5.5 Antibacksliding 18
5.6 Antidegradation 18
5.7 Stormwater 20
5.8 Water Treatment Additives 21
6.0 Permit Draft Discussion **22**
6.1 Discharge Limitations 22
6.2 Monitoring Conditions 23
6.3 Schedule of Compliance 24
6.4 Special Conditions 24
6.5 Spill Response and Reporting Requirement 25
6.6 Permit Processing/Public Comment 26

1.0 INTRODUCTION

The Indiana Department of Environmental Management (IDEM) received a National Pollutant Discharge Elimination System (NPDES) Permit application from ArcelorMittal on March 29, 1991. The discharge covered by this NPDES permit was previously covered under an existing permit (IN0000205) that was issued on September 30, 1986, and was subsequently modified on June 21, 1990, and September 26, 1991. The existing permit, IN0000205, expired on September 29, 1991. Since the facility filed a timely renewal application, the permit is considered to be administratively extended in accordance with 327 IAC 5-2-6(b). During the renewal process, the permittee requested to split permit number IN0000205 into two (2) NPDES permits. This permit is the new NPDES permit. The application was last updated in June 2009. A five year permit is proposed in accordance with 327 IAC 5-2-6(a).

The Federal Water Pollution Control Act of 1972 and subsequent amendments require a NPDES permit for the discharge of wastewater to surface waters. Furthermore, Indiana Statute 13-15-1-2 requires a permit to control or limit the discharge of any contaminants into state waters or into a publicly owned treatment works. This proposed permit action by IDEM complies with both federal and state requirements.

In accordance with Title 40 of the Code of Federal Regulations (CFR) Sections 124.8 and 124.6, as well is Indiana Administrative Code (IAC) 327 Section 5, development of a Fact Sheet is required for NPDES permits. This document fulfills the requirements established in those regulations.

This Fact Sheet was prepared in order to document the factors considered in the development of NPDES Permit effluent limitations. The technical basis for the Fact Sheet may consist of evaluations of promulgated effluent guidelines, existing effluent quality, receiving water conditions, and wasteload allocations to meet Indiana Water Quality Standards. Decisions to award variances to Water Quality Standards or promulgated effluent guidelines are justified in the Fact Sheet where necessary.

2.0 FACILITY DESCRIPTION

2.1 General

ArcelorMittal – Indiana Harbor West is classified under Standard Industrial Classification (SIC) Code 3312 – Steel Mill. The permittee is a large integrated steel mill. Intermediate and final products include sinter, iron, raw steel, cast steel, hot strip, cold rolled strip, hot dip galvanized strip, and chromium and tin plated strip.

The ArcelorMittal – Indiana Harbor West (AM West) currently holds NPDES permit number IN0000205. The discharges associated with this new NPDES permit were previously covered under IN0000205. The facility, however, has requested that the discharge from Outfall 001 and Internal Outfall 101 be separated from IN0000205 and incorporated into this NPDES permit. These outfalls contain wastewater from some U.S. Steel operations as well as AM West operations. However, this permit for the discharge of such wastewaters is applied to AM West as they are the owner and operator of the Central Treatment Plant (CTP). The wastestreams from U.S. Steel were considered while determining effluent limitations for this permit.

A map showing the location of the facility has been included as Figure 1.

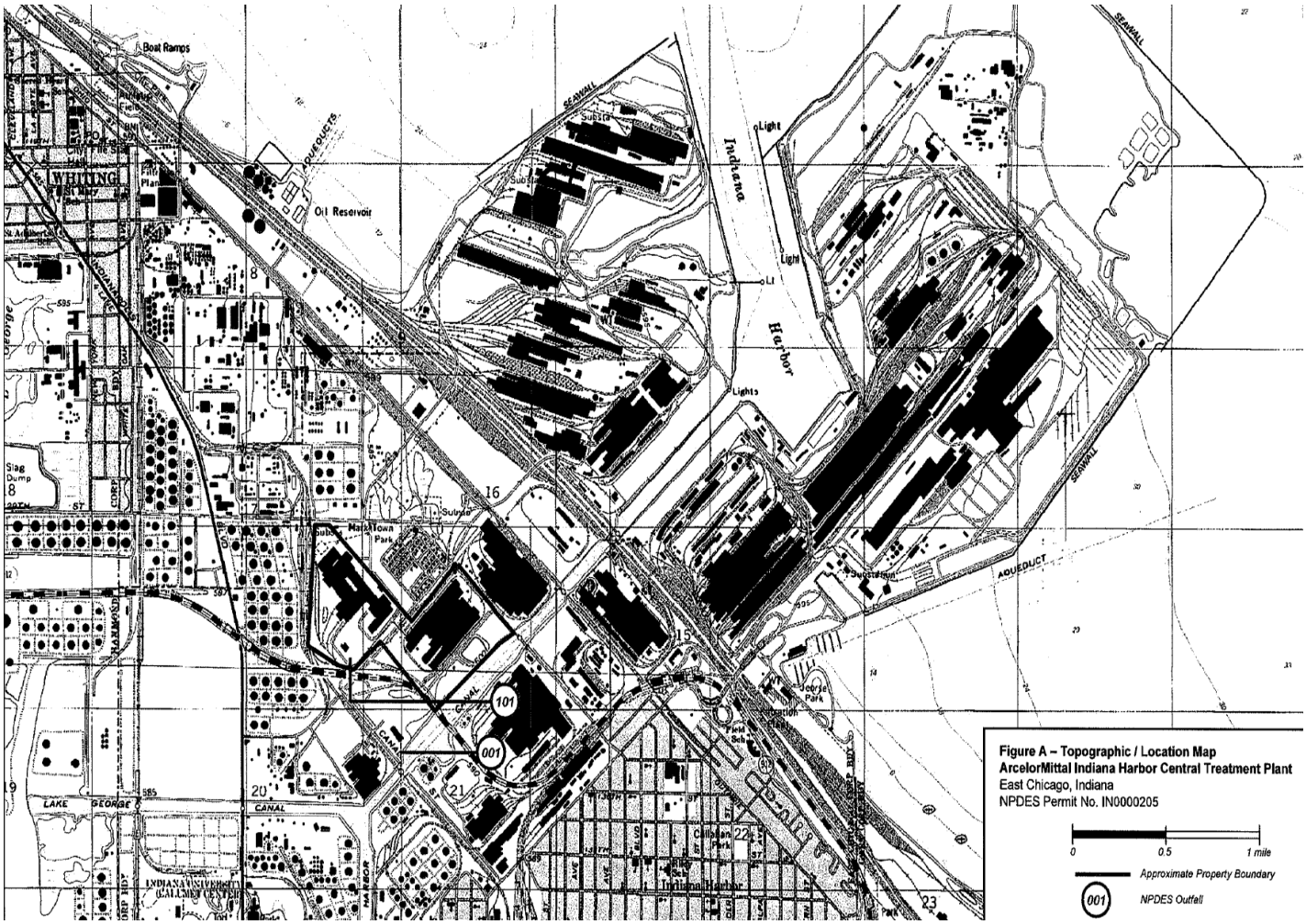

Figure 1: Facility Location
Lake County

2.2 Outfall Locations

OUTFALL 001	Latitude:	41º 38’ 55”
	Longitude:	87º 23’ 05”

2.3 Wastewater Treatment

The current discharge from Outfall 001 consists of wastestreams from Internal Outfall 101, non-contact cooling water, site storm water, and groundwater from basement sumps. The discharge from Outfall 001 has an average discharge of approximately 6.5 MGD.

The discharge from Internal Outfall 101 is from the on-site Central Wastewater Treatment Plant (CWTP) and currently consists of wastewaters from: U.S. Steel (USS) No. 2 Pickler; cold rollers in the USS 6-Stand and 2-Stand Mills and ArcelorMittal No. 2 Galvanizing Temper Mill; USS alkaline cleaning operations; hot-dip galvanizing operations from ArcelorMittal No.1 and No. 2 galvanizing lines and; USS tin and chromium line electroplating operations.

In the NPDES permit application, AM West proposed altering the wastestreams that are sent to the CWTP. However, in a letter dated August 17, 2010, the permittee indicated that it would be

preferred to keep the CWTP as it is currently and any changes would be handled in a permit modification when needed.

The discharge from Internal Outfall 101 has an average discharge of approximately 5.66 MGD. A Flow Diagram of current operations has been included as Figure 2.

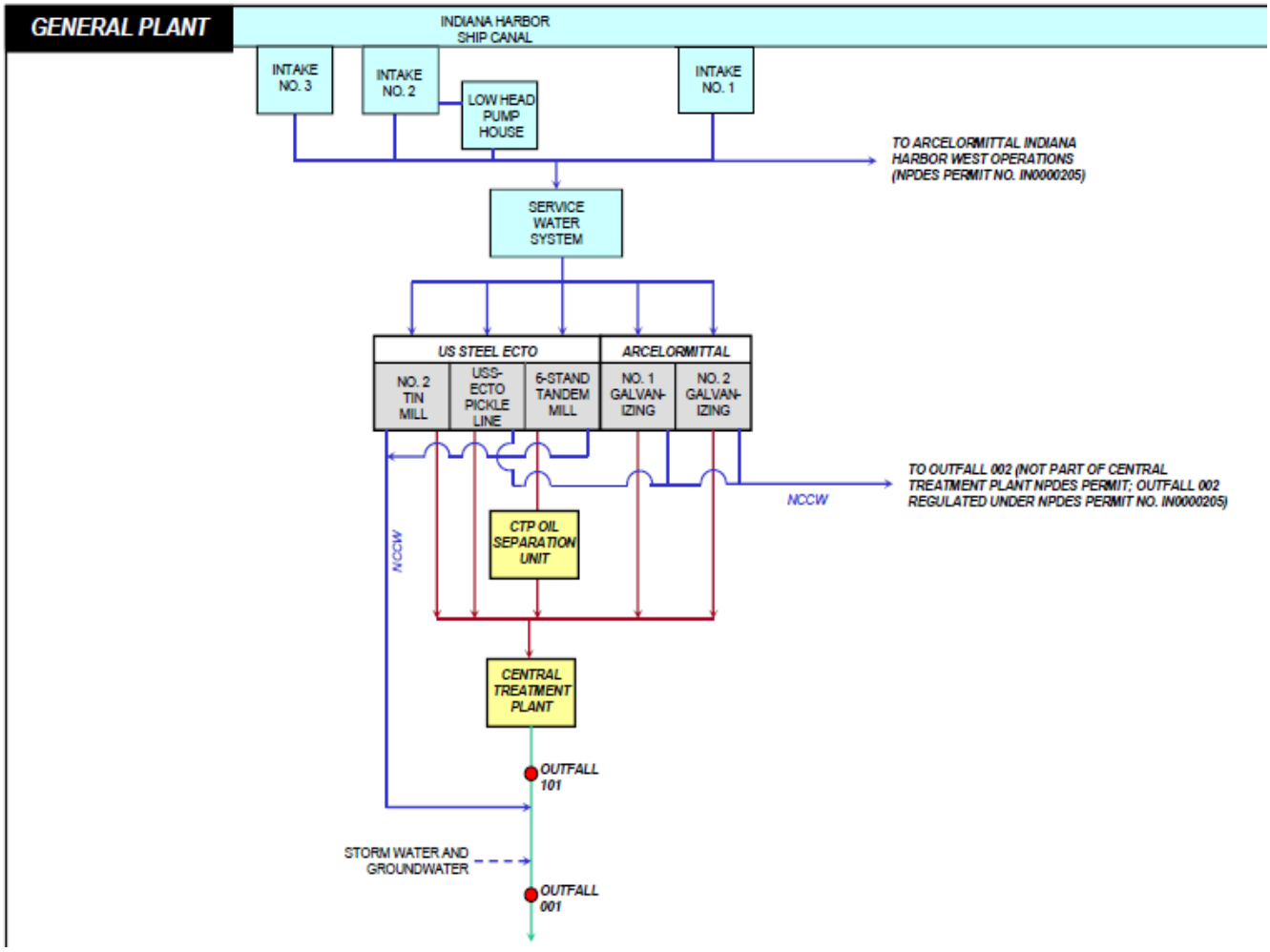

Figure 2: Flow Diagram

Treatment technologies utilized in the CWTP include flotation, flocculation, sedimentation, chemical precipitation, coagulation, and neutralization. The permittee shall have the wastewater treatment facilities under the responsible charge of an operator certified by the Commissioner in a classification corresponding to the classification of the wastewater treatment plant as required by IC 13-18-11-11 and 327 IAC 5-22-5. In order to operate a wastewater treatment plant the operator shall have qualifications as established in 327 IAC 5-22-7. The facility's treatment plant is currently, and will remain, a Class D industrial wastewater treatment plant classification.

2.4 Changes in Operation

The wastewater discharge covered under this NPDES permit was previously covered under permit IN0000205. The facility, however, has requested that the discharge from Outfall 001 and Internal Outfall 101 be separated from IN0000205 and incorporated into this new NPDES permit.

2.5 Facility Storm Water

Site storm water is discharged via Outfall 001 without treatment. Storm water monitoring requirements can be found in Section 5.7 of this Fact Sheet.

3.0 COMPLIANCE HISTORY

This is a new permit and thus has not created a compliance history. However, Outfall 001 and Internal Outfall 101 were previously permitted under NPDES Permit No. IN0000205. A review of the computerized database for tracking permit compliance in regards to the previous permit found two effluent violations for Chronic Whole Effluent Toxicity Testing [7/08; 7/09] at Outfall 001 and one violation for Oil and Grease [2/09] at Outfall 101. There are no current or pending enforcement actions regarding NPDES permits at this facility.

4.0 RECEIVING WATER

The Indiana Harbor Ship Canal originates at the confluence of the East and West Branches of the Grand Calumet River. It runs north for two miles where it is joined by the Lake George Canal. The Indiana Harbor Ship Canal then runs two miles northeast to the Indiana Harbor. The Indiana Harbor runs one mile to the north before emptying into the open waters of Lake Michigan. The receiving stream for Outfall 001 is the Indiana Harbor Ship Canal downstream of the Lake George Canal. The $Q_{7,10}$ low flow value of the Indiana Harbor Ship Canal is 352 cfs and shall be capable of supporting a well balanced, warm water aquatic community and full body contact recreation in accordance with 327 IAC 2-1.5-5.

The permittee discharges to a waterbody that has been identified as a high quality water of the state within the Great Lakes system. The Indiana Harbor Ship Canal is a tributary to the Indiana portion of the open waters of Lake Michigan. The Indiana portion of the open waters of Lake Michigan is designated in 327 IAC 2-1.5-19(b)(2) as an Outstanding State Resource Water (OSRW). Discharges to tributaries of OSRWs are subject to the antidegradation implementation procedure for OSRWs in 327 IAC 5-2-11.7(a)(2).

In addition to OSRW antidegradation implementation procedures, the Indiana Harbor Ship Canal is subject to other NPDES requirements specific to Great Lakes system dischargers under 327 IAC 2-1.5 and 327 IAC 5-2-11.2 through 327 IAC 5-2-11.6. These rules address water quality standards applicable to dischargers within the Great Lakes system and reasonable potential to exceed water quality standards procedures.

As required by 327 IAC 5-2-11.3(b)(2), language in this renewed permit specifically prohibits the permittee from undertaking deliberate actions that would result in new or increased discharges of BCC's or new or increased permit limits for non-BCC's, or from allowing a new or increased discharge of a BCC from an existing or proposed industrial user, without first proving that the new or increased discharge would not result in a significant lowering of water quality, or by submission and approval of an antidegradation demonstration to the IDEM.

4.1 Receiving Stream Water Quality

The Indiana Harbor Ship Canal is listed on Indiana's 2010 303(d) List of Impaired Waters for *E. coli*, oil and grease, impaired biotic communities, and PCB's in fish tissue. The Lake Michigan shoreline east and west of the Indiana Harbor Canal is listed for mercury and PCB's in fish tissue. A TMDL report has not been completed for the Indiana Harbor Ship Canal.

5.0 PERMIT LIMITATIONS

Two categories of effluent limitations exist for NPDES permits: 1) Technology-Based Effluent Limitations (TBELs), and 2) Water Quality-Based Effluent Limitations (WQBELs). Technology-Based Effluent Limits are developed by applying the national effluent limitation guidelines (ELGs) established by EPA for specific industrial categories. TBELs were established to require a minimum level of treatment for industrial or municipal sources using available technology. In the absence of federally promulgated guidelines, effluent limits can also be based upon BPJ. TBELs are the primary mechanism of control and enforcement of water pollution under the CWA. Technology based treatment requirements under section 301(b) of the CWA represent the minimum level of control that must be imposed in a section 402 permit [40 CFR 125.3(a)]. Accordingly, every individual member of a discharge class or category is required to operate their water pollution control technologies according to industry-wide standards and accepted engineering practices. This means that TBELs based upon a BPJ determination are applied at end-of-pipe and mixing zones are not allowed [40 CFR 125.3(a)]. Similarly, since the statutory deadlines for BPT, BAT and BCT have all passed, compliance schedules are also not allowed.

Water quality based effluent limits are designed to be protective of the beneficial uses of the receiving water and are independent of the available treatment technology. The need for WQBELs is determined by application of the reasonable potential procedures contained in 327 IAC 5-2-11.5. WQBELs are developed using the water quality criteria in 327 IAC 2-1.5, the wasteload allocation procedures in 327 IAC 5-2-11.4 and the procedures for converting wasteload allocations into WQBELs in 327 IAC 5-2-11.6. In addition to numeric WQBELs, the narrative water quality criteria contained in 327 IAC 2-1.5-8 have been included in this permit to ensure that the narrative water quality criteria are met.

According to 40 CFR 122.44 and 327 IAC 5, NPDES permit limits are based on either technology-based limitations, where applicable, best professional judgment (BPJ), or Indiana Water Quality-Based Effluent Limitations, whichever is most stringent.

5.1 Existing Permit Limits (IN0000205)

Outfall 001

Parameter	Monthly Average	Daily Maximum	Units
Flow	Report	Report	MGD
Oil and Grease	Report	Report	mg/l
Cadmium	0.002	0.003	mg/l
Total Residual Oxidants	N/A	0.05	mg/l
Total Residual Chlorine	0.02	0.04	mg/l

Parameter	Daily Minimum	Daily Maximum	Units
pH	6.0	9.5	Std Units

Internal Outfall 101

Parameter	Monthly Average	Daily Maximum	Units
Flow	Report	Report	MGD
Total Suspended Solids	1,821	3,786	lbs/day
Oil and Grease	Report	1,250	lbs/day
Tin	Report	Report	lbs/day & mg/l
Zinc	35.55	62.69	lbs/day
Chromium	41.2	66.9	lbs/day
Lead	10.32	16.57	lbs/day
Cadmium	Report	Report	mg/l
Iron	Report	Report	mg/l

Parameter	Daily Minimum	Daily Maximum	Units
pH	6.0	9.5	Std Units

5.2 Technology-Based Effluent Limits

The applicable technology based standards for the wastestreams contributing to the discharge from Outfall 001 and Internal Outfall 101 are contained in 40 CFR 420 – Iron and Steel Manufacturing Point Source Category. In addition, technology based standards contained in 40 CFR 433 – Metal Finishing Point Source Category are applicable to the discharge associated with the electroplating lines. The following table identifies the applicable standards and production values submitted in the facility's NPDES application.

Applicable ELGs and Production Values

Subpart	Description	Average Daily Production
40 CFR 420.90 Subpart I – Acid Pickling Subcategory	Discharges from sulfuric acid, hydrochloric acid, or combination acid pickling operations	2,520 tons/day
40 CFR 420.100 Subpart J – Cold Forming Subcategory	Discharges from cold rolling in which unheated steel is passed through rolls or otherwise processed	4,870 tons/day
40 CFR 420.110 Subpart K – Alkaline Cleaning Subcategory	Discharges in which steel products are immersed in alkaline cleaning baths to remove mineral and animal fats or oils	645 tons/day
40 CFR 420.120 Subpart L – Hot Coating Subcategory	Discharges from operations in which steel is coated by the hot dip process	2,625 tons/day
40 CFR 433.10 Metal Finishing Point Source Category	Discharges from any of the following six metal finishing operations on any basis material: Electroplating, Electroless Plating, Anodizing, Coating, Chemical Etching and Milling, and Printed Circuit Board Manufacture	1.73 MGD

The following tables contain the applicable ELGs, by parameter, from the federal regulations identified above and the calculated technology-based limits (TBELs). Typically, TBELs are established for the discharge from each individual wastestream. However, many steel mills have centralized wastewater treatment facilities designed to treat any combination of wastewaters. 40 CFR 420.01(a) identifies specific steel mills and their associated centralized treatment facilities where alternative effluent limitations may be established. ArcelorMittal West (formerly J&L Steel, East Chicago), NPDES Permit No. IN0000205, is identified in 40 CFR 420.01(a) and the alternative effluent limitations from the central treatment facility are applicable. The technology based effluent limitations for Internal Outfall 101 are established by adding all applicable pollutant loads for each wastestream, by parameter, contained in 40 CFR Part 420 and 40 CFR 433.

Total Suspended Solids					
40 CFR	**Production**	**Monthly Average**		**Daily Maximum**	
		Categorical Limitation	**Subtotal (lbs/day)**	**Categorical Limitation**	**Subtotal (lbs/day)**
420.92(b)(2) (BPT)	2,520 Tons/Day	0.0350 lbs/1000lbs	176[1]	0.0818 lbs/1000lbs	412
420.93(b)(2) (BAT)		-------	---------	--------	--------
420.92(b)(4) (BPT)	1 Scrubber	2.45 kg/day	5.40[2]	5.72 kg/day	12.6
420.93(b)(4) (BAT)		-------	---------	--------	--------
420.102(a)(2) (BPT)	3,828 Tons/Day	0.00313 lbs/1000lbs	24.0	0.00626 lbs/1000lbs	47.9
420.103(a)(2) (BAT)		-------	---------	--------	--------
420.102(a)(4) (BPT)	1,042 Tons/Day	0.0113 lbs/1000lbs	23.5	0.0225 lbs/1000lbs	46.9
420.103(a)(4) (BAT)		-------	---------	--------	--------
420.112(b) (BPT)	645 Tons/Day	0.0438 lbs/1000lbs	56.5	0.102 lbs/1000lbs	132
420.113 (BAT)		-------	---------	--------	--------
420.122(a)(1) (BPT)	2,625 Tons/Day	0.0751 lbs/1000lbs	394	0.175 lbs/1000lbs	919
420.123(a)(1) (BAT)		-------	---------	--------	--------
420.122(c) (BPT)	2 Scrubbers	16.3 kg/day	71.7	38.1 kg/day	168
420.123(c) (BAT)		-------	---------	--------	--------
433.13(a) (BPT)	1.73 MGD	31 mg/l	447[3]	60 mg/l	866
433.14(a) (BAT)		-------	---------	--------	--------
Total TSS Limitation		1,198 lbs/day		2,604 lbs/day	

[1] Below is an example TSS calculation for Hydrochloric Acid Pickling; Strip, Sheet, & Plate:

$$\text{TSS Average Monthly Limit} = 2{,}520\frac{tons}{day} \times 2000\frac{lb}{ton} \times 0.035\frac{lb}{1000lb} = 176\frac{lb}{day}$$

[2] Below is an example TSS calculation for Hydrochloric Acid Pickling; Fume Scrubbers:

$$\text{TSS Average Monthly Limit} = 2.45\frac{kg}{day} \times 2.20\frac{lb}{kg} \times 1Scrubber = 5.40\frac{lb}{day}$$

[3] Below is an example TSS calculation for Metal Finishing:

$$\text{TSS Average Monthly Limit} = 31\frac{mg}{l} \times 8.34\frac{(lb/MG)}{(mg/l)} \times 1.73\frac{MG}{day} = 447\frac{lb}{day}$$

Oil and Grease					
40 CFR	**Production**	**Monthly Average**		**Daily Maximum**	
		Categorical Limitation	**Subtotal (lbs/day)**	**Categorical Limitation**	**Subtotal (lbs/day)**
420.92(b)(2) (BPT)	2,520 Tons/Day	0.0117 lbs/1000lbs	59.0	0.0350 lbs/1000lbs	176
420.93(b)(2) (BAT)		-------	---------	--------	--------
420.92(b)(4) (BPT)	1 Scrubber	0.819 kg/day	1.80	2.45 kg/day	5.39
420.93(b)(4) (BAT)		-------	---------	--------	--------
420.102(a)(2) (BPT)	3,828 Tons/Day	0.00104 lbs/1000lbs	7.96	0.00261 lbs/1000lbs	20.0
420.103(a)(2) (BAT)		-------	---------	--------	--------
420.102(a)(4) (BPT)	1,042 Tons/Day	0.00376 lbs/1000lbs	7.84	0.00939 lbs/1000lbs	19.6
420.103(a)(4) (BAT)		-------	---------	--------	--------
420.112(b) (BPT)	645 Tons/Day	0.0146 lbs/1000lbs	18.8	0.0438 lbs/1000lbs	56.5
420.113 (BAT)		-------	---------	--------	--------
420.122(a)(1) (BPT)	2,625 Tons/Day	0.0250 lbs/1000lbs	131	0.0751 lbs/1000lbs	394
420.123(a)(1) (BAT)		-------	---------	--------	--------
420.122(c) (BPT)	2 Scrubbers	5.45 kg/day	24.0	16.3 kg/day	71.7
420.123(c) (BAT)		-------	---------	--------	--------
433.13(a) (BPT)	1.73 MGD	26 mg/l	375	52 mg/l	750
433.14(a) (BAT)		-------	---------	--------	--------
Total O+G Limitation		625 lbs/day		1,493 lbs/day	

Lead					
40 CFR	**Production**	**Monthly Average**		**Daily Maximum**	
		Categorical Limitation	**Subtotal (lbs/day)**	**Categorical Limitation**	**Subtotal (lbs/day)**
420.92(b)(2) (BPT)	2,520 Tons/Day	0.000175 lbs/1000lbs	0.882	0.000526 lbs/1000lbs	2.65
420.93(b)(2) (BAT)		0.000175 lbs/1000lbs	0.882	0.000526 lbs/1000lbs	2.65
420.92(b)(4) (BPT)	1 Scrubber	0.0123 kg/day	0.0271	0.0368 kg/day	0.0810
420.93(b)(4) (BAT)		0.0123 kg/day	0.0271	0.0368 kg/day	0.0810
420.102(a)(2) (BPT)	3,828 Tons/Day	0.0000156 lbs/1000lbs	0.119	0.0000469 lbs/1000lbs	0.359
420.103(a)(2) (BAT)		0.0000156 lbs/1000lbs	0.119	0.0000469 lbs/1000lbs	0.359
420.102(a)(4) (BPT)	1,042 Tons/Day	0.0000563 lbs/1000lbs	0.117	0.000169 lbs/1000lbs	0.352
420.103(a)(4) (BAT)		0.0000563 lbs/1000lbs	0.117	0.000169 lbs/1000lbs	0.352
420.112(b) (BPT)	645 Tons/Day	PARAMETER NOT IDENTIFIED IN THIS CATEGORY			
420.113 (BAT)					
420.122(a)(1) (BPT)	2,625 Tons/Day	0.000376 lbs/1000lbs	1.97	0.00113 lbs/1000lbs	5.93
420.123(a)(1) (BAT)		0.000376 lbs/1000lbs	1.97	0.00113 lbs/1000lbs	5.93
420.122(c) (BPT)	2 Scrubbers	0.0819 kg/day	0.360	0.245 kg/day	1.08
420.123(c) (BAT)		0.0123 kg/day	0.0541	0.0368 kg/day	0.162
433.13(a) (BPT)	1.73 MGD	0.43 mg/l	6.20	0.69 mg/l	9.96
433.14(a) (BAT)		0.43 mg/l	6.20	0.69 mg/l	9.96
Total Lead Limitation		9.37 lbs/day		19.5 lbs/day	

Zinc					
40 CFR	**Production**	**Monthly Average**		**Daily Maximum**	
		Categorical Limitation	**Subtotal (lbs/day)**	**Categorical Limitation**	**Subtotal (lbs/day)**
420.92(b)(2) (BPT)	2,520 Tons/Day	0.000234 lbs/1000lbs	1.18	0.000701 lbs/1000lbs	3.53
420.93(b)(2) (BAT)		0.000234 lbs/1000lbs	1.18	0.000701 lbs/1000lbs	3.53
420.92(b)(4) (BPT)	1 Scrubber	0.0164 kg/day	0.0361	0.0491 kg/day	0.108
420.93(b)(4) (BAT)		0.0164 kg/day	0.0361	0.0491 kg/day	0.108
420.102(a)(2) (BPT)	3,828 Tons/Day	0.0000104 lbs/1000lbs	0.0796	0.0000313 lbs/1000lbs	0.240
420.103(a)(2) (BAT)		0.0000104 lbs/1000lbs	0.0796	0.0000313 lbs/1000lbs	0.240
420.102(a)(4) (BPT)	1,042 Tons/Day	0.0000376 lbs/1000lbs	0.0784	0.000113 lbs/1000lbs	0.235
420.103(a)(4) (BAT)		0.0000376 lbs/1000lbs	0.0784	0.000113 lbs/1000lbs	0.235
420.112(b) (BPT)	645 Tons/Day	PARAMETER NOT IDENTIFIED IN THIS CATEGORY			
420.113 (BAT)					
420.122(a)(1) (BPT)	2,625 Tons/Day	0.000500 lbs/1000lbs	2.63	0.00150 lbs/1000lbs	7.88
420.123(a)(1) (BAT)		0.000500 lbs/1000lbs	2.63	0.00150 lbs/1000lbs	7.88
420.122(c) (BPT)	2 Scrubbers	0.109 kg/day	0.480	0.327 kg/day	1.44
420.123(c) (BAT)		0.0164 kg/day	0.0722	0.0491 kg/day	0.216
433.13(a) (BPT)	1.73 MGD	1.48 mg/l	21.4	2.61 mg/l	37.7
433.14(a) (BAT)		1.48 mg/l	21.4	2.61 mg/l	37.7
Total Zinc Limitation		25.5 lbs/day		49.9 lbs/day	

Chromium					
40 CFR	**Production**	**Monthly Average**		**Daily Maximum**	
		Categorical Limitation	**Subtotal (lbs/day)**	**Categorical Limitation**	**Subtotal (lbs/day)**
420.92(b)(2) (BPT)	2,520 Tons/Day	PARAMETER NOT IDENTIFIED IN THIS CATEGORY			
420.93(b)(2) (BAT)					
420.92(b)(4) (BPT)	1 Scrubber	PARAMETER NOT IDENTIFIED IN THIS CATEGORY			
420.93(b)(4) (BAT)					
420.102(a)(2) (BPT)	3,828 Tons/Day	COLD ROLLING WASTEWATERS ARE NOT TREATED WITH DESCALING OR COMBINATION ACID PICKLING WASTEWATERS. THEREFORE, CHROMIUM LIMITATIONS ARE NOT APPLICABLE FROM THIS CATEGORY.			
420.103(a)(2) (BAT)					
420.102(a)(4) (BPT)	1,042 Tons/Day	COLD ROLLING WASTEWATERS ARE NOT TREATED WITH DESCALING OR COMBINATION ACID PICKLING WASTEWATERS. THEREFORE, CHROMIUM LIMITATIONS ARE NOT APPLICABLE FROM THIS CATEGORY.			
420.103(a)(4) (BAT)					
420.112(b) (BPT)	645 Tons/Day	PARAMETER NOT IDENTIFIED IN THIS CATEGORY			
420.113 (BAT)					
420.122(a)(1) (BPT)	2,625 Tons/Day	FACILITY DOES NOT DISCHARGE CHROMATE RINSE FROM GALVANIZING OPERATIONS. THEREFORE, HEXAVALENT CHROMIUM LIMITATIONS ARE NOT APPLICABLE			
420.123(a)(1) (BAT)					
420.122(c) (BPT)	2 Scrubbers	FACILITY DOES NOT DISCHARGE CHROMATE RINSE FROM GALVANIZING OPERATIONS. THEREFORE, HEXAVALENT CHROMIUM LIMITATIONS ARE NOT APPLICABLE			
420.123(c) (BAT)					
433.13(a) (BPT)	1.73 MGD	1.71 mg/l	24.7	2.77 mg/l	40.0
433.14(a) (BAT)		1.71 mg/l	24.7	2.77 mg/l	40.0
Total Chromium Limitation		24.7 lbs/day		40.0 lbs/day	

Nickel					
40 CFR	**Production**	**Monthly Average**		**Daily Maximum**	
		Categorical Limitation	**Subtotal (lbs/day)**	**Categorical Limitation**	**Subtotal (lbs/day)**
420.92(b)(2) (BPT) **420.93(b)(2)** (BAT)	2,520 Tons/Day	PARAMETER NOT IDENTIFIED IN THIS CATEGORY			
420.92(b)(4) (BPT) **420.93(b)(4)** (BAT)	1 Scrubber	PARAMETER NOT IDENTIFIED IN THIS CATEGORY			
420.102(a)(2) (BPT) **420.103(a)(2)** (BAT)	3,828 Tons/Day	COLD ROLLING WASTEWATERS ARE NOT TREATED WITH DESCALING OR COMBINATION ACID PICKLING WASTEWATERS. THEREFORE, CHROMIUM LIMITATIONS ARE NOT APPLICABLE FROM THIS CATEGORY.			
420.102(a)(4) (BPT) **420.103(a)(4)** (BAT)	1,042 Tons/Day	COLD ROLLING WASTEWATERS ARE NOT TREATED WITH DESCALING OR COMBINATION ACID PICKLING WASTEWATERS. THEREFORE, CHROMIUM LIMITATIONS ARE NOT APPLICABLE FROM THIS CATEGORY.			
420.112(b) (BPT) **420.113** (BAT)	645 Tons/Day	PARAMETER NOT IDENTIFIED IN THIS CATEGORY			
420.122(a)(1) (BPT) **420.123(a)(1)** (BAT)	2,625 Tons/Day	PARAMETER NOT IDENTIFIED IN THIS CATEGORY			
420.122(c) (BPT) **420.123(c)** (BAT)	2 Scrubbers	PARAMETER NOT IDENTIFIED IN THIS CATEGORY			
433.13(a) (BPT)	1.73 MGD	2.38 mg/l	34.3	3.98 mg/l	57.4
433.14(a) (BAT)		2.38 mg/l	34.3	3.98 mg/l	57.4
Total Nickel Limitation		34.3 lbs/day		57.4 lbs/day	

Naphthalene					
40 CFR	**Production**	**Monthly Average**		**Daily Maximum**	
		Categorical Limitation	**Subtotal (lbs/day)**	**Categorical Limitation**	**Subtotal (lbs/day)**
420.92(b)(2) (BPT) **420.93(b)(2)** (BAT)	2,520 Tons/Day	PARAMETER NOT IDENTIFIED IN THIS CATEGORY			
420.92(b)(4) (BPT) **420.93(b)(4)** (BAT)	1 Scrubber	PARAMETER NOT IDENTIFIED IN THIS CATEGORY			
420.102(a)(2) (BPT)	3,828 Tons/Day	---------	----------	0.0000104 lbs/1000lbs	0.0796
420.103(a)(2) (BAT)		---------	---------	0.0000104 lbs/1000lbs	0.0796
420.102(a)(4) (BPT)	1,042 Tons/Day	---------	---------	0.0000376 lbs/1000lbs	0.0784
420.103(a)(4) (BAT)		---------	---------	0.0000376 lbs/1000lbs	0.0784
420.112(b) (BPT) **420.113** (BAT)	645 Tons/Day	PARAMETER NOT IDENTIFIED IN THIS CATEGORY			
420.122(a)(1) (BPT) **420.123(a)(1)** (BAT)	2,625 Tons/Day	PARAMETER NOT IDENTIFIED IN THIS CATEGORY			
420.122(c) (BPT) **420.123(c)** (BAT)	2 Scrubbers	PARAMETER NOT IDENTIFIED IN THIS CATEGORY			
433.13(a) (BPT) **433.14(a)** (BAT)	1.73 MGD	PARAMETER NOT IDENTIFIED IN THIS CATEGORY			
Total Naphthalene Limitation		Report lbs/day		0.158 lbs/day	

Tetrachloroethylene					
40 CFR	**Production**	**Monthly Average**		**Daily Maximum**	
		Categorical Limitation	**Subtotal (lbs/day)**	**Categorical Limitation**	**Subtotal (lbs/day)**
420.92(b)(2) (BPT)	2,520 Tons/Day	PARAMETER NOT IDENTIFIED IN THIS CATEGORY			
420.93(b)(2) (BAT)					
420.92(b)(4) (BPT)	1 Scrubber	PARAMETER NOT IDENTIFIED IN THIS CATEGORY			
420.93(b)(4) (BAT)					
420.102(a)(2) (BPT)	3,828 Tons/Day	---------	----------	0.0000156 lbs/1000lbs	0.119
420.103(a)(2) (BAT)		---------	---------	0.0000156 lbs/1000lbs	0.119
420.102(a)(4) (BPT)	1,042 Tons/Day	---------	---------	0.0000563 lbs/1000lbs	0.117
420.103(a)(4) (BAT)		---------	---------	0.0000563 lbs/1000lbs	0.117
420.112(b) (BPT)	645 Tons/Day	PARAMETER NOT IDENTIFIED IN THIS CATEGORY			
420.113 (BAT)					
420.122(a)(1) (BPT)	2,625 Tons/Day	PARAMETER NOT IDENTIFIED IN THIS CATEGORY			
420.123(a)(1) (BAT)					
420.122(c) (BPT)	2 Scrubbers	PARAMETER NOT IDENTIFIED IN THIS CATEGORY			
420.123(c) (BAT)					
433.13(a) (BPT)	1.73 MGD	PARAMETER NOT IDENTIFIED IN THIS CATEGORY			
433.14(a) (BAT)					
Total Tetrachloroethylene Limitation		Report lbs/day		0.236 lbs/day	

Cadmium					
40 CFR	**Production**	**Monthly Average**		**Daily Maximum**	
		Categorical Limitation	**Subtotal (lbs/day)**	**Categorical Limitation**	**Subtotal (lbs/day)**
420.92(b)(2) (BPT)	2,520 Tons/Day	PARAMETER NOT IDENTIFIED IN THIS CATEGORY			
420.93(b)(2) (BAT)					
420.92(b)(4) (BPT)	1 Scrubber	PARAMETER NOT IDENTIFIED IN THIS CATEGORY			
420.93(b)(4) (BAT)					
420.102(a)(2) (BPT)	3,828 Tons/Day	PARAMETER NOT IDENTIFIED IN THIS CATEGORY			
420.103(a)(2) (BAT)					
420.102(a)(4) (BPT)	1,042 Tons/Day	PARAMETER NOT IDENTIFIED IN THIS CATEGORY			
420.103(a)(4) (BAT)					
420.112(b) (BPT)	645 Tons/Day	PARAMETER NOT IDENTIFIED IN THIS CATEGORY			
420.113 (BAT)					
420.122(a)(1) (BPT)	2,625 Tons/Day	PARAMETER NOT IDENTIFIED IN THIS CATEGORY			
420.123(a)(1) (BAT)					
420.122(c) (BPT)	2 Scrubbers	PARAMETER NOT IDENTIFIED IN THIS CATEGORY			
420.123(c) (BAT)					
433.13(a) (BPT)	1.73 MGD	0.26 mg/l	3.8	0.69 mg/l	10
433.14(a) (BAT)		0.26 mg/l	3.8	0.69 mg/l	10
Total Cadmium Limitation		3.8 lbs/day		10 lbs/day	

Copper					
40 CFR	**Production**	**Monthly Average**		**Daily Maximum**	
		Categorical Limitation	**Subtotal (lbs/day)**	**Categorical Limitation**	**Subtotal (lbs/day)**
420.92(b)(2) (BPT) **420.93(b)(2)** (BAT)	2,520 Tons/Day	PARAMETER NOT IDENTIFIED IN THIS CATEGORY			
420.92(b)(4) (BPT) **420.93(b)(4)** (BAT)	1 Scrubber	PARAMETER NOT IDENTIFIED IN THIS CATEGORY			
420.102(a)(2) (BPT) **420.103(a)(2)** (BAT)	3,828 Tons/Day	PARAMETER NOT IDENTIFIED IN THIS CATEGORY			
420.102(a)(4) (BPT) **420.103(a)(4)** (BAT)	1,042 Tons/Day	PARAMETER NOT IDENTIFIED IN THIS CATEGORY			
420.112(b) (BPT) **420.113** (BAT)	645 Tons/Day	PARAMETER NOT IDENTIFIED IN THIS CATEGORY			
420.122(a)(1) (BPT) **420.123(a)(1)** (BAT)	2,625 Tons/Day	PARAMETER NOT IDENTIFIED IN THIS CATEGORY			
420.122(c) (BPT) **420.123(c)** (BAT)	2 Scrubbers	PARAMETER NOT IDENTIFIED IN THIS CATEGORY			
433.13(a) (BPT)	1.73 MGD	2.07 mg/l	29.9	3.38 mg/l	48.8
433.14(a) (BAT)		2.07 mg/l	29.9	3.38 mg/l	48.8
Total Copper Limitation		29.9 lbs/day		48.8 lbs/day	

Silver					
40 CFR	**Production**	**Monthly Average**		**Daily Maximum**	
		Categorical Limitation	**Subtotal (lbs/day)**	**Categorical Limitation**	**Subtotal (lbs/day)**
420.92(b)(2) (BPT) **420.93(b)(2)** (BAT)	2,520 Tons/Day	PARAMETER NOT IDENTIFIED IN THIS CATEGORY			
420.92(b)(4) (BPT) **420.93(b)(4)** (BAT)	1 Scrubber	PARAMETER NOT IDENTIFIED IN THIS CATEGORY			
420.102(a)(2) (BPT) **420.103(a)(2)** (BAT)	3,828 Tons/Day	PARAMETER NOT IDENTIFIED IN THIS CATEGORY			
420.102(a)(4) (BPT) **420.103(a)(4)** (BAT)	1,042 Tons/Day	PARAMETER NOT IDENTIFIED IN THIS CATEGORY			
420.112(b) (BPT) **420.113** (BAT)	645 Tons/Day	PARAMETER NOT IDENTIFIED IN THIS CATEGORY			
420.122(a)(1) (BPT) **420.123(a)(1)** (BAT)	2,625 Tons/Day	PARAMETER NOT IDENTIFIED IN THIS CATEGORY			
420.122(c) (BPT) **420.123(c)** (BAT)	2 Scrubbers	PARAMETER NOT IDENTIFIED IN THIS CATEGORY			
433.13(a) (BPT)	1.73 MGD	0.24 mg/l	3.5	0.43 mg/l	6.2
433.14(a) (BAT)		0.24 mg/l	3.5	0.43 mg/l	6.2
Total Silver Limitation		3.5 lbs/day		6.2 lbs/day	

Total Cyanide					
40 CFR	**Production**	**Monthly Average**		**Daily Maximum**	
		Categorical Limitation	**Subtotal (lbs/day)**	**Categorical Limitation**	**Subtotal (lbs/day)**
420.92(b)(2) (BPT) **420.93(b)(2)** (BAT)	2,520 Tons/Day	PARAMETER NOT IDENTIFIED IN THIS CATEGORY			
420.92(b)(4) (BPT) **420.93(b)(4)** (BAT)	1 Scrubber	PARAMETER NOT IDENTIFIED IN THIS CATEGORY			
420.102(a)(2) (BPT) **420.103(a)(2)** (BAT)	3,828 Tons/Day	PARAMETER NOT IDENTIFIED IN THIS CATEGORY			
420.102(a)(4) (BPT) **420.103(a)(4)** (BAT)	1,042 Tons/Day	PARAMETER NOT IDENTIFIED IN THIS CATEGORY			
420.112(b) (BPT) **420.113** (BAT)	645 Tons/Day	PARAMETER NOT IDENTIFIED IN THIS CATEGORY			
420.122(a)(1) (BPT) **420.123(a)(1)** (BAT)	2,625 Tons/Day	PARAMETER NOT IDENTIFIED IN THIS CATEGORY			
420.122(c) (BPT) **420.123(c)** (BAT)	2 Scrubbers	PARAMETER NOT IDENTIFIED IN THIS CATEGORY			
433.13(a) (BPT)	1.73 MGD	0.65 mg/l	9.4	1.20 mg/l	17.3
433.14(a) (BAT)		0.65 mg/l	9.4	1.20 mg/l	17.3
Total Cyanide Limitation		9.4 lbs/day		17.3 lbs/day	

Total Toxic Organics					
40 CFR	**Production**	**Monthly Average**		**Daily Maximum**	
		Categorical Limitation	**Subtotal (lbs/day)**	**Categorical Limitation**	**Subtotal (lbs/day)**
420.92(b)(2) (BPT) **420.93(b)(2)** (BAT)	2,520 Tons/Day	PARAMETER NOT IDENTIFIED IN THIS CATEGORY			
420.92(b)(4) (BPT) **420.93(b)(4)** (BAT)	1 Scrubber	PARAMETER NOT IDENTIFIED IN THIS CATEGORY			
420.102(a)(2) (BPT) **420.103(a)(2)** (BAT)	3,828 Tons/Day	PARAMETER NOT IDENTIFIED IN THIS CATEGORY			
420.102(a)(4) (BPT) **420.103(a)(4)** (BAT)	1,042 Tons/Day	PARAMETER NOT IDENTIFIED IN THIS CATEGORY			
420.112(b) (BPT) **420.113** (BAT)	645 Tons/Day	PARAMETER NOT IDENTIFIED IN THIS CATEGORY			
420.122(a)(1) (BPT) **420.123(a)(1)** (BAT)	2,625 Tons/Day	PARAMETER NOT IDENTIFIED IN THIS CATEGORY			
420.122(c) (BPT) **420.123(c)** (BAT)	2 Scrubbers	PARAMETER NOT IDENTIFIED IN THIS CATEGORY			
433.13(a) (BPT)	1.73 MGD	---------	----------	2.13 mg/l	30.7
433.14(a) (BAT)		---------	----------	2.13 mg/l	30.7
Total Toxic Organics Limitation		----------		30.7 lbs/day	

The following TBELs are included in this NPDES permit and are included at Internal Outfall 101:

- Total Suspended Solids (TSS), Total Cyanide, Total Toxic Organics (TTO), Total Chromium, Nickel, Naphthalene and Tetrachloroethylene (TCE)

  The above mentioned parameters have TBELs that are more stringent than the Water Quality-Based Effluent Limitations (WQBELs), were applicable, or are not limited by WQBELs. Therefore, the TBELs for monthly average and daily maximums, identified in the table above, are included at Internal Outfall 101.

- Oil and Grease (O+G)

  The calculated daily maximum and monthly average effluent limitations above are less stringent than the previous effluent limits at the internal monitoring location. However, O+G limitations must be considered sufficient to ensure compliance with narrative water quality criteria in 327 IAC 2-1.5-8(b)(1)(C) that prohibits oil or other substances in amounts sufficient to create a visible film or sheen on the receiving water. The water-quality based limitations included in this NPDES permit are concentration based (15.0 mg/l Daily Maximum and 10.0 mg/l Monthly Average). Therefore under the authority of Section 402 of the CWA, technology-based effluent limits are calculated using BPJ and applied at the internal monitoring location to ensure compliance with the Indiana water quality criteria for O+G. The mass limitations are calculated by multiplying the flow 6.5 MGD by a conversion factor of 8.345 by the concentrations identified above for monthly average and daily maximum. Mass limitations are included at Internal Outfall 101 of 542 lbs/day Monthly Average and 813 lbs/day Daily Maximum.

- Copper, Lead, Silver, and Zinc

  The WQBELs for the above mentioned parameters are more stringent than the TBELs calculated in the table above. Therefore, these parameters have been identified as 'Report' at Internal Outfall 101 and the final Water Quality-Based Effluent limit for these parameters will apply at Outfall 001.

- Cadmium

  The facility requested, in a June 2011 letter, a monitoring waiver for cadmium at Outfall 101 pursuant to 40 CFR 122.44(a)(2). A monitoring waiver may be granted for any guideline-based parameter if the discharger demonstrates through sampling that the pollutant is not present or is present only at background levels from intake water and without any increase due to the activities of the discharger. Based on a review of significant recent data for cadmium, this agency has determined that the requirements of 40 CFR 122.44(a)(2) have been met. IDEM shall be notified if any changes occur at this facility that would require the conditions that this waiver was granted to be reviewed.

5.3 Water Quality-Based Effluent Limits

The water quality-based effluent limitations for this facility are based on water quality criteria in 327 IAC 2-1.5-8 or under the procedures described in 327 IAC 2-1.5-11 through 327 IAC 2-1.5-16 and implementation procedures in 327 IAC 5. Further discussion concerning water-quality based effluent derivation has been included as Attachment A of this Fact Sheet.

- Flow

  The permittee's flow is to be monitored in accordance with 327 IAC 5-2-13(a)2. Flow monitoring requirements apply at Outfall 001 and Internal Outfall 101.

- pH

  Limitations for pH in the proposed permit are taken from 327 IAC 2-1.5-8(c)(2).

- Copper, Lead, Silver, and Zinc

  The above mentioned parameters are identified in the federally promulgated guidelines. However, the TBELs calculated for these parameters are less stringent than the WQBELs. Therefore, the effluent limits for the above mentioned parameters apply at Outfall 001. The daily maximum and monthly average WQBELs for these parameters are identified below.

Parameter	Monthly Average	Daily Maximum	Units
Copper	1.6 (0.03)	2.8 (0.052)	lbs/day (mg/l)
Lead	5.0 (0.092)	9.8 (0.18)	lbs/day (mg/l)
Silver	0.023 (0.00042)	0.04 (0.00073)	lbs/day (mg/l)
Zinc	11 (0.21)	22 (0.41)	lbs/day (mg/l)

- Cadmium

  A monitoring waiver for cadmium at Outfall 101, pursuant to 40 CFR 122.44(a)(2), has been granted. All recent samples for cadmium have been <1 ug/l at both Internal Outfall 101 and Outfall 001. Therefore, reporting requirements at Outfall 001 are not required.

- Oil and Grease

  Oil and Grease limitations are based upon 327 IAC 5-5-2(h)(2) and are 15.0 mg/l Daily Maximum and 10.0 mg/l Monthly Average. Also, these limits are considered sufficient to ensure compliance with narrative water quality criteria in 327 IAC 2-1.5-8(b)(1)(C) that prohibits oil or other substances in amounts sufficient to create a visible film or sheen on the receiving water.

- Total Residual Chlorine (TRC)

  The TRC effluent limit was calculated in the WLA and is 0.016 mg/l for monthly average and 0.038 mg/l for the daily maximum. The limit is included because the facility chlorinates/dechlorinates water. The daily maximum WQBEL for TRC is greater than the Level of Detection (LOD) but less than the Level of Quantization (LOQ). Compliance with the daily maximum limit will be demonstrated if the observed effluent concentrations are less than the LOQ (0.06 mg/l). Monitoring for TRC shall be once daily during Zebra or Quagga mussel intake chlorination, and continue for three additional days after Zebra or Quagga mussel treatment has been completed.

- Mercury

  Mercury was identified in the permittee's application in quantities that showed a Reasonable Potential to Exceed (RPE) Indiana's Water Quality Criteria. Therefore, WQBELs for mercury were calculated in the WLA report and identify the monthly average as 0.000071 lbs/day (1.3 ng/l) and the daily maximum as 0.00017 lbs/day (3.2 ng/l). A fifty-four (54) month schedule of compliance has been incorporated into this permit for this parameter.

- Free Cyanide and Fluoride

  Monitoring requirements for the above mentioned parameters is included to determine if a Reasonable Potential to Exceed (RPE) Indiana WQBELs exists.

- Temperature and Thermal Discharge Report

  Based on the results of instream sampling and a multi-discharger thermal model, the discharges from AM West do not have a reasonable potential to exceed a water quality criterion for temperature. However, in accordance with 327 IAC 5-2-11.5(e), the commissioner may require monitoring for a pollutant of concern even if it is determined that a WQBEL is not required based on a reasonable potential determination. Therefore, monitoring for temperature and thermal discharge is added to this outfall.

5.4 Whole Effluent Toxicity

The Indiana Water Quality Standards require that a discharge shall not cause acute toxicity, as measured by Whole Effluent Toxicity Tests (WETT), at any point in the water body and that a discharge shall not cause chronic toxicity, as measured by whole effluent toxicity tests, outside of the applicable mixing zone. Per Indiana Rule 327 IAC 5-2-11 .5(c)(2), the commissioner may include, in the NPDES permit, WETT requirements to generate the data needed to adequately characterized the toxicity of the effluent to aquatic life. Please refer to Attachment A of this Fact Sheet for a further analysis regarding WETT.

Therefore, the permittee is required to conduct WETT to determine the toxicity of the water treatment additives and process wastestreams that may be used at this site. This does not negate the necessity to submit Water Treatment Additive (WTA) approval worksheets for the additives proposed at this site.

5.5 Antibacksliding

Pursuant to 327 IAC 5-2-10(11) a permit may not be renewed, reissued or modified which contain effluent limitations that are less stringent than the comparable effluent limitation in the previous permit. Antibacksliding is not an issue in this NPDES permit.

5.6 Antidegradation

The Indiana Harbor Ship Canal is a high quality water of the Great Lakes Basin, as defined in 327 IAC 2-1.5-4. The Indiana Harbor Ship Canal is also a tributary to Lake Michigan, which is designated as an Outstanding State Resource Water (OSRW). According to 327 IAC 5-2-11.7(a)(2), for a new or increased discharge of a pollutant or pollutant parameter from a new or existing Great Lakes discharger into a tributary of an OSRW for which a new or increased permit limit would be required, the following apply:

(1) 5-2-11.3(a) and 5-2-11.3(b) apply to the new or increased discharge; and

(2) the discharge shall not cause a significant lowering of water quality in the OSRW.

An Antidegradation Review was performed for this discharge. Based on the antidegradation review, the Department determined the proposed discharges comply with the IDEM Antidegradation Policy found in 327 IAC 2 and an antidegradation demonstration is not required. For further information about the antidegradation review, please refer to Attachment A of this Fact Sheet.

New mass limits for total residual chlorine were calculated for Outfall 001. The previous permit only has concentration limits for this parameter. The existing flow was used to calculate more stringent WQBELs so the new mass limits will not result in a calculated concentration increase outside of the mixing zone. Therefore, new mass limits for total residual chlorine do not cause a significant lowering of water quality for the Indiana Harbor Canal.

New mass and concentration limits for mercury were calculated for Outfall 001. As shown in Attachment A, these limits were determined to not cause a significant lowering of water quality in the Indiana Harbor Ship Canal under 5-2-11.3(b)(1)(C)(ii).

New mass-based and concentration-based WQBELs for copper and silver are required at Outfall 001 due to a reasonable potential to exceed analysis because the calculated mass-based WQBELs for these parameters were more stringent than the TBELs at the internal monitoring location. IDEM believes that the new limits for copper and silver are authorized under the previous permit and are therefore authorized under the renewal permit and antidegradation does not apply. According to 327 IAC 5-2-11.7(a)(2)(C)(i), the requirements of 5-2-11.7(a)(2) will be considered to have been met when one or more of the items listed in 5-2-11.3(b)(1)(C)(ii) apply. Under 327 IAC 5-2-11.3(b)(1)(C)(ii)(DD), the new application of effluent limitation guidelines does not constitute a significant lowering of water quality. Therefore, the new limits for copper, and silver at Outfall 001 do not cause a significant lowering of water quality in the receiving stream.

New mass-based and concentration-based WQBELs for lead and zinc are required at Outfall 001 due to a reasonable potential to exceed analysis because the calculated mass-based WQBELs for these parameters were more stringent than the TBELs at the internal monitoring location. Under 5-2-11.3(b)(1)(C)(ii)(CC), new or modified water quality criteria does not constitute a significant lowering of water quality. Therefore, the new limits for lead and zinc at Outfall 001 do not cause a significant lowering of water quality in the receiving stream.

New TBELs for nickel, naphthalene, tetrachloroethylene, and total toxic organics are required at Internal Outfall 101. These are new pollutants to be monitored in the NPDES permit. However, like copper and silver mentioned above, this is due to the new application of effluent limitation guidelines and falls under the exemption found in 327 IAC 5-2-11.3(b)(1)(C)(ii)(DD).

Furthermore, it should be noted that the discharge covered in this new NPDES permit is not a new or increased discharge from the facility. As indicated earlier, the discharge in this NPDES permit has been previously authorized in Permit No. IN0000205.

In accordance with 327 IAC 2.2-11.7(a)(2)(B), a new or increased discharge to a tributary of an OSRW may not cause a significant lowering of water quality in the downstream OSRW. The permittee is prohibited from undertaking any deliberate action that would result in a new or increased discharge of a Bioaccumulative Chemical of Concern (BCC) or a new or increased permit limit for a pollutant or pollutant parameter that is not a BCC unless one of the following is completed prior to the commencement of the action; (i) Information is submitted to the commissioner demonstrating that the proposed new or increased discharge will not cause a

significant lowering of water quality; (ii) An antidegradation demonstration submitted and approved in accordance 327 IAC 5-2-11.3.

5.7 Stormwater

According to 40 CFR 122.26(b)(14)(ii) and 327 IAC 5-4-6(b)(1) facilities classified under Industrial Classification (SIC) Code 3312 – Steel Mill, are considered to be engaging in "industrial activity" for purposes of 40 CFR 122.26(b). Therefore the permittee is required to have all storm water discharges associated with industrial activity permitted. Treatment for storm water discharges associated with industrial activities is required to meet, at a minimum, best available technology economically achievable/best conventional pollutant control technology (BAT/BCT) requirements. EPA has determined that non-numeric technology-based effluent limits have been determined to be equal to BPT/BAT/BCT for storm water associated with industrial activity.

Storm water associated with industrial activity must be assessed to determine compliance with all water quality standards. The non-numeric storm water conditions and effluent limits contain the technology-based effluent limitations. Effluent limitations, as defined in the CWA, are restrictions on quantities, rates, and concentrations of constituents which are discharged. Effective implementation of these requirements should meet the applicable water quality based effluent limitations. Violation of any of these effluent limitations constitutes a violation of the permit.

The technology-based effluent limitations require the permittee to minimize exposure of raw, final, or waste materials to rain, snow, snowmelt, and runoff. In doing so, the permittee is required, to the extent technologically available and economically practicable and achievable, to either locate industrial materials and activities inside or to protect them with storm resistant coverings. In addition, the permittee is required to: (1) use good housekeeping practices to keep exposed areas clean, (2) regularly inspect, test, maintain and repair all industrial equipment and systems to avoid situations that may result in leaks, spills, and other releases of pollutants in storm water discharges, (3) minimize the potential for leaks, spills and other releases that may be exposed to storm water and develop plans for effective response to such spills if or when they occur, (4) stabilize exposed area and contain runoff using structural and/or non-structural control measures to minimize onsite erosion and sedimentation, and the resulting discharge of pollutants, (5) divert, infiltrate, reuse, contain or otherwise reduce storm water runoff, to minimize pollutants in your discharges, (6) enclose or cover storage piles of salt or piles containing salt used for deicing or other commercial or industrial purposes, including maintenance of paved surfaces, (7) train all employees who work in areas where industrial materials or activities are exposed to storm water, or who are responsible for implementing activities necessary to meet the conditions of this permit (e.g., inspectors, maintenance personnel), including all members of your Pollution Prevention Team, (8) ensure that waste, garbage and floatable debris are not discharged to receiving waters by keeping exposed areas free of such materials or by intercepting them before they are discharged, and (9) minimize generation of dust and off-site tracking of raw, final or waste materials.

To meet the non-numeric effluent limitations in Part I.D.5, the permit requires ArcelorMittal West to select control measures (including best management practices) to address the selection and design considerations in Part I.D.4.

The permittee must control its discharge as necessary to meet applicable water quality standards. It is expected that compliance with the non-numeric effluent limitations and other terms and conditions in this permit will meet this effluent limitation. However, if at any time the permittee, or IDEM, determines that the discharge causes or contributes to an exceedance of applicable

water quality standards, the permittee must take corrective actions, and conduct follow-up monitoring.

"Term and Condition" to Provide Information in a SWPPP

Distinct from the effluent limitation provisions in the permit, the permit requires the discharger to prepare a Storm water Pollution Prevention Plan (SWPPP) for its facility. The SWPPP is intended to document the selection, design, installation, and implementation (including inspection, maintenance, monitoring, and corrective action) of control measures being used to comply with the effluent limits set forth in Part I.D. of the permit. In general, the SWPPP must be kept up-to-date, and modified whenever necessary to reflect any changes in control measures that were found to be necessary to meet the effluent limitations in this permit.

The requirement to prepare a SWPPP is not an effluent limitation, rather it documents what practices the discharger is implementing to meet the effluent limitations in Part I.D. of the permit. The SWPPP is not an effluent limitation because it does not restrict quantities, rates, and concentrations of constituents which are discharged. Instead, the requirement to develop a SWPPP is a permit "term or condition" authorized under sections 402(a)(2) and 308 of the Act. Section 402(a)(2) states, "[t]he Administrator shall prescribe conditions for [NPDES] permits to assure compliance with the requirements of paragraph (1) of this subsection, including conditions on data and information collection, reporting, and such other requirements as he deems appropriate." The SWPPP requirements set forth in this permit are terms or conditions under the CWA because the discharger is documenting information on how it intends to comply with the effluent limitations (and inspection and evaluation requirements) contained elsewhere in the permit. Thus, the requirement to develop a SWPPP and keep it updated is no different than other information collection conditions, as authorized by section 402(a)(2), in other permits.

IDEM's Non-Numeric Effluent Limitations and SWPPP language was modeled from and is consistent with the EPA's Multi-Sector General Permit for Storm Water Discharges Associated with Industrial Activity, issued on September 29, 2008. It should be noted that EPA has developed a guidance document, "Storm Water Management for Industrial Activities: Developing Pollution Prevention Plans and Best Management Practices", 1992 to assist facilities in developing a SWPPP. The guidance contains worksheets, checklists, and model forms that should assist a facility in developing a SWPPP.

Public availability of documents

Part I.E.2.d(2) of the permit requires that the permittee retain a copy of the current SWPPP at the facility and it must be immediately available, at the time of an onsite inspection or upon request, to IDEM. Additionally, interested persons can request a copy of the SWPPP through IDEM. By requiring members of the public to request a copy of the SWPPP through IDEM, the Agency is able to provide the permittees with assurance that any Confidential Business Information contained within its SWPPP is not released to the public.

5.8 Water Treatment Additives

In the event that changes are to be made in the use of water treatment additives including dosage rates and concentrations contributing to Outfall 001, the permittee shall notify the Indiana Department of Environmental Management as required by Part II.C. 1. of this permit. The permittee must provide the acute and chronic aquatic toxicity information on any new or changed water treatment additives.

6.0 PERMIT DRAFT DISCUSSION

6.1 Discharge Limitations

The permittee discharges to a waterbody that has been identified as a water of the state within the Great Lakes system. In addition to OSRW antidegradation implementation procedures, it is subject to other NPDES requirements specific to Great Lakes system dischargers under 327 IAC 2-1.5 and 327 IAC 5-2-11.2 through 327 IAC 5-2-11.6. These rules address water quality standards applicable to dischargers within the Great Lakes system and reasonable potential to exceed water quality standards procedures.

As required by 327 IAC 5-2-11.3(b)(2), Part II.A.16. of the renewal permit specifically prohibits the permittee from undertaking deliberate actions that would result in new or increased discharges of BCC's or new or increased permit limits for non-BCC's, or from allowing a new or increased discharge of a BCC from an existing or proposed industrial user, without first proving that the new or increased discharge would not result in a significant lowering of water quality, or by submission and approval of an antidegradation demonstration to the IDEM.

The tables below contain the proposed effluent limitations.

Outfall 001

Parameter	Monthly Average	Daily Maximum	Units
Flow	Report	Report	MGD
Oil and Grease	Report (10)	Report (15)	lbs/day (mg/l)
Total Suspended Solids	Report	Report	lbs/day (mg/l)
Total Residual Chlorine	0.87 (0.02)	2.1 (0.04)	lbs/day (mg/l)
Zinc	11 (210)	22 (410)	lbs/day (ug/l)
Lead	5.0 (92)	9.8 (180)	lbs/day (ug/l)
Copper	1.6 (0.03)	2.8 (0.052)	lbs/day (mg/l)
Silver	0.023 (0.00042)	0.04 (0.00073)	lbs/day (mg/l)
Mercury			
Interim	Report	Report	lbs/day (ng/l)
Final	0.000071 (1.3)	0.00017 (3.2)	lbs/day (ng/l)
Free Cyanide	Report	Report	lbs/day (mg/l)
Fluoride	Report	Report	lbs/day (mg/l)
Temperature	Report	Report	ºF
Thermal Discharge	Report	Report	MBTU/Hr.
Whole Effluent Toxicity Tests			

Parameter	Daily Minimum	Daily Maximum	Units
pH	6.0	9.0	Std Units

Internal Outfall 101

Parameter	Monthly Average	Daily Maximum	Units
Flow	Report	Report	MGD
Oil and Grease	542	813	lbs/day
Total Suspended Solids	1,198	2,604	lbs/day
Cadmium	3.8	10	lbs/day
Zinc	Report	Report	lbs/day
Total Chromium	24.7	40.0	lbs/day
Lead	Report	Report	lbs/day
Nickel	34.3	57.4	lbs/day
Copper	Report	Report	lbs/day
Silver	Report	Report	lbs/day
Total Cyanide	9.4	17.3	lbs/day
Naphthalene	Report	0.158	lbs/day
Tetrachloroethylene	Report	0.236	lbs/day
Total Toxic Organics	N/A	30.7	lbs/day

6.2 Monitoring Conditions

Outfall 001

Parameter	Minimum Frequency	Type of Sample
Flow	Daily	Continuous
Oil and Grease	2/Week	3 Grabs/24 hrs
Total Suspended Solids	2/Week	24-hour composite
Total Residual Chlorine	Daily	Grab
Zinc	2/Week	24-hour composite
Lead	2/Week	24-hour composite
Copper	2/Week	24-hour composite
Silver	2/Week	24-hour composite
Mercury	6/Year	Grab
Free Cyanide	2/Month	Grab
Fluoride	2/Month	24-hour composite
Temperature	2/Week	Grab
Thermal Discharge	2/Week	Report
Whole Effluent Toxicity Tests	See Part I.I of Permit	Report
pH	2/Week	Grab

Internal Outfall 101

Parameter	Minimum Frequency	Type of Sample
Flow	Daily	Continuous
Oil and Grease	2/Week	3 Grabs/24 hrs
Total Suspended Solids	2/Week	24-hour composite
Cadmium	[1]	----------
Zinc	2/Week	24-hour composite
Total Chromium	2/Week	24-hour composite
Lead	2/Week	24-hour composite
Nickel	2/Week	24-hour composite
Copper	2/Week	24-hour composite
Silver	2/Week	24-hour composite
Total Cyanide	2/Week	Grab
Naphthalene	1/Week	24-hour composite
Tetrachloroethylene	1/Week	24-hour composite
Total Toxic Organics	1/Quarter	24-hour composite

[1] A monitoring waiver per 40 CFR 122.44 has been granted for this parameter for the term of this permit. IDEM shall be notified if any changes occur at this facility that would require the conditions that this waiver was granted to be reviewed.

6.3 Schedule of Compliance

A fifty-four (54) month Schedule of Compliance has been incorporated into this NPDES Permit for mercury.

6.4 Special Conditions

- Pollutant Minimization Program

The permittee is required to develop and conduct a Pollutant Minimization Program (PMP) for each pollutant with a WQBEL below the LOQ. The requirements for the PMP can be found in Part I.H of the permit.

- Thermal Requirements

Based on the results of instream sampling and a multi-discharger thermal model, the discharge from Outfall 001 does not have a reasonable potential to exceed the water quality criterion for temperature. Under 5-2-11.5(e), the commissioner may require monitoring for a pollutant of concern even if it is determined that a WQBEL is not required based on a reasonable potential determination. Thermal effluent requirements are being included in this permit to maintain compliance with Indiana Water Quality Standards.

The thermal discharge shall be calculated for Outfall 001. Such discharge shall be limited and monitored by the permittee as specified below.

a. Flow and temperature values used in thermal discharge calculations shall be taken from the same day of monitoring.

b. The thermal discharge shall be computed as follows:

Thermal Discharge (MBTU/Hr.) = Q x (To – Ti) x 0.3477

where,

-MBTU/Hr. = million Btu/Hr.
Q = 24 hour discharge flow, MGD
To = effluent temperature, ºF
Ti = influent temperature, ºF
0.3477 = conversion factor

c. Temperature shall be monitored as follows at Outfall 001:

DISCHARGE LIMITATIONS

	Quantity or Loading			Quality or Concentration			Monitoring Requirements	
Parameter	Monthly Average	Daily Maximum	Units	Monthly Average	Daily Maximum	Units	Measurement Frequency	Sample Type
Temperature								
Intake [2]	----	----	----	Report	Report	°F	2 X Week	Grab
Outfall[1]	----	----	----	Report	Report	°F	2 X Week	Grab

[1] Temperature at Outfall 001 shall be sampled between the hours of 12 pm and 4 pm.

[2] On days when temperature is sampled at the outfall, temperature shall also be sampled at the intake supplying the most significant source of water to the outfall.

- 316(b)

Section 316(b) of the federal Clean Water Act requires that facilities minimize adverse environmental impact resulting from the operation of cooling water intake structures (CWISs) by using the "best technology available" (BTA). The ArcelorMittal Indiana Harbor West facility supplies the source water received by the ArcelorMittal Indiana Harbor Central Wastewater Treatment Plant. The CWISs associated with this permit and ArcelorMittal Indiana Harbor West's permit (IN0000205) are regulated under ArcelorMittal Indiana Harbor West's NPDES Permit (IN0000205). NPDES Permit IN0000205 contains IDEM's BTA determination. For further information and requirements pertaining to CWISs, please refer to NPDES Permit IN0000205.

6.5 Spill Response and Reporting Requirement

Reporting requirements associated with the Spill Reporting, Containment, and Response requirements of 327 IAC 2-6.1 are included in Part II.B.2.c. and Part II.C.3. of the NPDES permit. Spills from the permitted facility meeting the definition of a spill under 327 IAC 2-6.1-4(15), the applicability requirements of 327 IAC 2-6.1-1, and the Reportable Spills requirements of 327 IAC 2-6.1-5 (other than those meeting an exclusion under 327 IAC 2-6.1-3 or the criteria outlined below) are subject to the Reporting Responsibilities of 327 IAC 2-6.1-7.

It should be noted that the reporting requirements of 327 IAC 2-6.1 do not apply to those discharges or exceedances that are under the jurisdiction of an applicable permit when the substance in question is covered by the permit and death or acute injury or illness to animals or humans does not occur. In order for a discharge or exceedance to be under the jurisdiction of this NPDES permit, the substance in question (a) must have been discharged in the normal course of

operation from an outfall listed in this permit, and (b) must have been discharged from an outfall for which the permittee has authorization to discharge that substance.

6.6 Permit Processing/Public Comment

Pursuant to IC 13-15-5-1, IDEM will publish a general notice in the newspaper with the largest general circulation within the above county. A 30-day comment period is available in order to solicit input from interested parties, including the general public. Comments concerning the draft permit should be submitted in accordance with the procedure outlined in the enclosed public notice form.

Attachment A

Water Quality Assessment

Attachment B

Non-Objection Letter