GUIDANCE DOCUMENT DECEMBER 29, 2014

INDIANA DEPARTMENT OF ENVIRONMENTAL MANAGEMENT

Guidance Manual for Indiana's Confined Feeding Program

Michael R. Pence
Governor

Thomas W. Easterly
Commissioner

www.idem.IN.gov 100 N. Senate Ave., Indianapolis, IN 46204

The Indiana Department of Environmental Management administers Indiana's Confined Feeding Program. This guidance manual explains key program requirements of the following law and rules:

- Confined Feeding Control Law – IC 13-18-10
- Confined Feeding Operation (CFO) Rule – 327 IAC 19
- Concentrated Animal Feeding Operation (CAFO) Rule – 327 IAC 15-16

The 2014 Indiana General Assembly approved changes to the Confined Feeding Control Law with the passage of Senate Enrolled Act No. 359. This guidance manual reflects those changes and also includes new and expanded sections providing more detail on specific topics.

This guidance does not replace the law or rules. IDEM recommends that you use the law and rules as your primary reference and use this guidance to help you to apply them. Please also note that this guidance does not supersede any other applicable federal, state or local laws or regulations.

You can view the latest version of rules and laws referenced in this guidance at iga.IN.gov. Click on the "Laws" then "Indiana Code" links to look up IC references. Click on the "Publications" then "Administrative Code" links to look up the IAC references. A copy of the Confined Feeding Control law is also provided as an Appendix in this guidance.

Check IDEM's website for updates and additions to this guidance. This guidance, and other documents related to the Confined Feeding Program are available at this website: http://www.in.gov/idem/4994.htm.

If you have questions about this guidance, please contact the Confined Feeding Permits Section at (317) 232-3111 or toll free at 1-800-451-6027, dial 0 and ask for extension 2-3111.

December 29, 2014

Table of Contents

Confined Feeding Program Overview	5
Submitting a CFO Approval Application	7
Alternative Design or Compliance Approach	13
Modifying Approved Animal Numbers	15
Public Notification, Comment Periods & Appeals	17
Plot Maps and Farmstead Plan	21
Waste Management System Drawings	23
Manure Management Plan	25
Design and Construction Requirements & Site Restrictions for New Waste Management Systems	31
Perimeter Drain Systems	43
Operating Record Requirements	45
Maintenance Requirements	47
Emergency Response Plan	49
Land Application of Manure	51
Marketing and Distributing Manure	57
Manure Application Rates	61
Manure Application to Frozen or Snow-Covered Ground	73
Storm Water Management for CFOs	75
Storm Water Management for CAFOs and NPDES CAFO Individual Permit Holders	77
Mortality Management	79
Ground Water Monitoring Requirements	81
Decommissioning or Closing Manure Storage Structures	89
Exiting the CFO Approval Program	91
Compliance and Inspection Activities	93
Other Environmental Regulations That Apply to CFOs	97

Appendix Contents:

I. Manure and Nutrient Management Reference and Website List 105
II. Manure, Soil and Plant Testing Resources 109
III. Natural Resource Conservation Service Field Office Tech Guide Reference 113
IV. Purdue Publication AY 278 "Estimating Manure Spreader Capacity" 115
V. Purdue Publication AY 277 "Calculating Manure and Manure Nutrient Application" 119
VI. Indiana's Confined Feeding Control Law 129
VII. Definitions that apply to Indiana's Confined Feeding Control Law 137
VIII. Preliminary Site Evaluation of CFO in Mapped Karst Areas 143

Confined Feeding Program Overview

Who is subject to the Confined Feeding Regulations? (See IC 13-18-10-1)

In Indiana, an animal feeding operation with at least 300 cattle, 600 swine or sheep, 30,000 poultry, or 500 horses in confinement is a confined feeding operation (CFO). A person must request and receive IDEM approval before operating a CFO, starting construction of a CFO, or starting expansion of a CFO to increase animal capacity or manure containment capacity.

What is the purpose of the program?

The purpose of the program is to help producers construct and operate CFOs in a manner that protects human health and the environment. The main environmental and public health concern with CFOs is manure and pollutant-bearing water contaminating Indiana's surface and ground water resources. The program has three main areas of focus to protect these resources:

1. Design, construction, and capacity requirements for confinement buildings, manure storage structures, and other waste management structures.
2. Operation and maintenance requirements including self-inspections, record keeping, and spill response.
3. Land application requirements including setbacks, application at agronomic rates, and avoiding weather conditions that could lead to contaminated runoff.

What are IDEM's roles in the program?

IDEM has three primary roles in the Confined Feeding Program:

1. The CFO Permits staff reviews applications for CFO Approvals and NPDES CAFO Individual Permits. IDEM engineers review design drawings and conduct inspections during construction of new buildings and manure storage structures. The CFO Permit Manager is a good point of contact for any question regarding a new approval or modification, renewal or construction for an existing approval.
2. The CFO Compliance staff conducts routine and complaint-based inspections to assure compliance with operational requirements in the rule. New farms may receive an initial compliance assistance visit.
3. The Enforcement Section staff follows up with enforcement action when a CFO has a serious or unresolved violation.

What is the difference between a CFO and a CAFO?

The terms CFO and CAFO relate to the size of the CFO. All farms with at least 300 cattle, 600 swine or sheep, 30,000 poultry, or 500 horses in confinement are CFOs. A Concentrated Animal Feeding Operation (CAFO) is a CFO that meets the threshold animal numbers for a large CAFO in the chart below. Most of the program's requirements apply to CFOs of all sizes. Some requirements apply only to CAFOs.

Species/Sector	Threshold Number of Animals	
	Large CAFO	CFO
Beef:		≥300
Cattle	≥1,000	
Cow/Calf Pairs	≥1,000	
Dairy:		
Mature Dairy Cow	≥700	
Other than Mature Dairy Cows (dairy heifers, dairy calves, veal calves)	≥1,000	
Swine:		≥600
Growers/Finishers/Sows (greater than 55lbs)	≥2,500	
Nursery Pig (less than 55lbs)	≥10,000	
Chickens:		≥30,000
Layers/Broilers (liquid manure handling system)	≥30,000	
Chickens other than Layers (not in a liquid manure handling system)	≥125,000	
Layers (not in a liquid manure handling system)	≥82,000	
Ducks:		
Liquid Manure System	≥5,000	
Not in a Liquid Manure System	≥30,000	
Others:		
Turkeys	≥55,000	
Horses	≥500	≥500
Sheep/Lambs	≥10,000	≥600

What type of approval do CFOs require?

As of July 1, 2012, the Confined Feeding Program has two types of approvals.

1. CFOs or CAFO-sized CFOs that do not discharge manure or pollutant-bearing water need a **CFO Approval** under 327 IAC 19. A CFO Approval will have slightly different requirements for a CFO versus a CAFO based on the rule requirements that apply specifically to CAFOs.
2. CFOs and CAFO-sized CFOs that discharge manure or pollutant-bearing water to waters of the state must have a **NPDES CAFO Individual Permit** under 327 IAC 15-16. The CAFO rule incorporates by reference the federal NPDES CAFO regulations.

CFOs in Indiana must have either a CFO Approval or a NPDES CAFO Individual Permit, but not both. A CFO or CAFO that does not discharge may elect to seek approval under a NPDES CAFO Individual Permit.

Submitting a CFO Approval Application

In Indiana, a person must request and receive IDEM approval before operating a CFO, starting construction of a CFO, or starting expansion of a CFO to increase animal capacity or manure containment capacity. (See IC 13-18-10-1)

Note: The application requirements for a NPDES CAFO Individual Permit are nearly the same as those for a CFO Approval. The CFO/CAFO Application Packet provides instructions for items that are unique to NPDES CAFO Individual Permit applications.

What must be included in a completed CFO Approval application?
(See 327 IAC 19-7-1)

Three copies, one of which may be electronic, of the following must be included in the application and sent to IDEM for approval:

1. A completed application on a form provided by IDEM; refer to the "CFO/CAFO Application Packet" available on the IDEM website.
2. A plot map, refer to "Plot Maps and Farmstead Plan" page 21.
3. A farmstead plan, refer to "Plot Maps and Farmstead Plan" page 21.
4. A waste management system drawing; refer to "Waste Management System Drawings" page 23.
5. A manure management plan, refer to "Manure Management Plan" page 25.
6. Soil and seasonal water table information obtained from a number of test holes beneath the proposed structures that adequately characterize the soil and water table. The testing must be conducted by a certified soil scientist, a certified geologist, or an engineer registered in Indiana. The test holes must be:
    a. At least 2 feet below the base of the storage structure for a concrete waste storage structure; and
    b. At least 5 feet below the lowest base of earthen manure storage structures except in karst topography where at least one test hole must go 10 feet below the base of the storage structure or to bedrock, whichever is shallower.
    c. The number of test holes for earthen solid manure storage structures must be no less than 2 holes for structures up to 1 acre in size, then an additional hole for each additional half acre.
    d. The number of test holes for liquid manure storage structures must be no less than 2 holes for structures up to one-half acre then an additional hole for each additional half acre.
    e. The number of test holes for concrete solid manure storage structures must be no less than 2 holes regardless of size.

    Note: Post-construction earthen liner testing should follow these same testing frequencies.

    *Please refer to the **Design and Construction Requirements & Site Restrictions for New Waste Management Systems** section for further information on soil testing for construction.*
7. If a proposed alternative to a specific requirement in this rule is used, a description is required indicating equivalent environmental and human health protection in accordance with 327 IAC 19-5 Alternate Design or Compliance Approach, and Innovative Technology.
8. A fee of $100; refer to "CFO Operation Approval Application" in the record book.

9. A list of potentially affected parties which includes all owners and occupants of land within one-half mile of the manure storage structures, the county commissioners, and all owners and occupants of land that adjoins the parcel that is the subject of the permit application.
10. A completed disclosure form regarding all pending environmental violations and any finally adjudicated or settled environmental violations within the 5 years that immediately precede the date of the application.
11. A statement affirming that animal feeding operations (AFOs) adjoining or contiguous to the CFO are not under common ownership. The rule language establishing this requirement does not describe what to do in instances where the statement is not true. If there are no AFOs adjoining or continguous to your CFO, provide a statement to that effect. If AFOs adjoining or contiguous to your CFO are under common ownership, provide a statement identifying the AFOs and describing the common ownership. Additionally, the statement should indicate if the farm is already an IDEM approved CFO. The response to these items may determine whether the adjoining AFO will need to be incorporated into the CFO Approval.
12. Copies of any waivers related to the reduction of applicable setbacks.
13. Copies of all land use agreements for manure land application.
14. To comply with 327 IAC 19-14-2, expanding CFOs must provide a certification that enough land is available for land application based on the application rate limitations specified in 327 IAC 19-14-3.

What other application requirements may apply? (See 327 IAC 19-7-1(c)(10))

IDEM may require submittal of other plans or supplemental information to ensure compliance with the rule. These may include additional design standards, alternate operational requirements, ground water monitoring or other protective measures.

How long is an approval valid? (See 327 IAC 19-8-1 and IC 13-18-10-2)

A CFO approval is good for five years from the date it was issued.

How is a CFO approval renewed? (See 327 IAC 19-8-2 and IC 13-18-10-2)

An owner or operator must submit a renewal application to IDEM at least 30 days before the approval expires. The CFO/CAFO Application packet provides instructions and forms for renewal applications. IDEM will send a renewal reminder to the owner/operator at least 4 months before the approval expiration date, but the owner or operator is responsible for meeting the renewal application deadline even if IDEM doesn't send a reminder or the owner or operator does not receive it.

IDEM will issue the renewal after confirming submittal of the following information:

1. An updated manure management plan (MMP).
2. A current farmstead plan.
3. Documentation of access to the acreage needed for manure application based on 327 IAC 19-14-2 and the application rates in 327 IAC 19-14-3.

Additional requirements apply when renewing certain construction approvals as described on the next page under "Can a construction approval be renewed?"

What time limits apply to construction approvals? (See IC 13-18-10-2)

CFO construction approvals issued on or after July 1, 2014 allow construction to begin at any time during the five-year term of the approval and allow the construction approval to be renewed to complete construction as described in the next question.

CFO construction approvals issued before July 1, 2014 require construction to begin within two years and to be completed within four years. A CFO with a construction approval issued before July 1, 2014 that has not already expired under the two year/four year deadlines in the approval may request an amendment to the approval to remove the two year/four year construction deadlines and to allow the construction approval to be renewed as described in the next question.

Can a construction approval be renewed? (See IC 13-18-10-2(c) & (d))

CFO construction approvals issued on or after July 1, 2014 can be renewed to allow the CFO to complete construction. A CFO construction approval issued before July 1, 2014 is not eligible to be renewed unless it has been amended to remove the 2 year/4 year construction deadlines.

The requirements for renewing construction approvals where construction began at least 30 days before the approval expired are the same as the requirements for renewing an operational approval. See the information on the previous page under "How is a CFO Approval renewed."

The following additional requirements apply when renewing a construction approval if construction did not start at least 30 days before the approval expiration date:

1. The owner or operator must provide notice of the renewal application to local officials and each owner and occupant of land within one-half mile of the approved structures including any existing manure storage structures as required in IC 13-18-10-2(d)(2).
2. The owner or operator must comply with the construction standards in place at the time the renewal is submitted. If construction standards have changed such that the plans and drawings originally approved do not comply, IDEM will request revised plans and drawings before approving the renewal.

Can an approval be transferred to a new owner/operator? (See 327 IAC 19-8-6)

Yes. If a CFO is sold, the parties completing the transaction must request transfer of the approval within 90 days of the purchase date. The rule language is unclear whether the transfer request must be made within 90 days before or after the transfer date. IDEM will accept transfer requests received up to 90 days after the date of transfer, but recommends that the parties contact IDEM before the transfer date – particularly in cases where unresolved violations will become the responsibility of the new owner.

A transfer request must be submitted to IDEM in writing and contain the following:

1. A specific date for transfer of approval responsibilities.
2. Identification of responsibility for any violations existing at the time of the transfer.
3. A Farmstead Map and Facility Detail Sheet showing transferred property.

When the approval transfer is completed, IDEM will expect the new owner/operator to establish and update operational records including the MMP. An updated MMP must be submitted with the next renewal application.

Under what circumstances can a CFO approval be amended? (See 327 IAC 19-8-3 and IC 13-18-10-2.1)

IDEM may issue amendments to CFO approvals under the following circumstances:

1. In IC 13-18-10-2.1(i) the Confined Feeding Control Law allows IDEM to amend or revoke an approval for failure to comply with the Confined Feeding Control Law or CFO Rules, water pollution control laws or rules; or as needed to prevent discharges of manure into the environment that pollute or threaten to pollute the waters of the state.
2. An owner/operator may request an amendment to address changes at the confined feeding operation that do not require a new approval.
3. An owner/operator may request an amendment for a change in the number or type of animals under certain circumstances. See the "Modifying Approved Animal Numbers" section for additional information.
4. An owner/operator with an existing approval may request approval of an alternative design or compliance approach through an approval amendment. Refer to the "Alternative Design or Compliance Approach" section for additional information.

The CFO/CAFO Application Packet (State Form 55051) provides forms and instructions for requesting an amendment. IDEM notifies the County Commissioners and adjoining landowners when approving an amendment. There are no application fees for amendments.

Under 327 IAC 19-8-3(b), an owner/operator must notify IDEM if there are any changes to the operation as approved. IDEM will review changes to determine whether an amendment or a new approval is necessary.

Under what circumstances can an application be denied? (See 327 IAC 19-8-4)

IDEM may deny an application or place conditions on an approval for the following:

1. If the CFO, at the time of the approval application or approval decision, is not in compliance with their existing approval or with the CFO regulation; or
2. The application is not on a form provided by IDEM or does not meet the requirements of the CFO regulation; or
3. A complete application is not submitted after the owner/operator receives 2 notices of the same deficiency on the new or renewal application.

Under what circumstance can a CFO approval be revoked? (See 327 IAC 19-8-5, 327 IAC 19-8-6 and IC 13-18-10-2.1(i))

IDEM may revoke an approval, or a condition in an approval under the following circumstances:

1. For violations of:
    a. Water pollution control laws
    b. Rules adopted under the water pollution control laws

   c. IC 13-18-10 Confined Feeding Control Law
   d. 327 IAC 19 Confined Feeding Operations
   e. CFO approval conditions
2. If necessary to prevent discharges of manure into the environment that pollute or threaten to pollute the waters of the state.

IDEM must provide written documentation of the basis for revoking an approval or a condition of an approval.

Alternate Design or Compliance Approach

A CFO owner/operator may request approval of alternate approaches to complying with the CFO regulation. The alternative may be related to how the facility is designed and constructed, how it is operated, or involve the use of an innovative technology. Alternate design or compliance approaches may be proposed in an application for a new CFO approval, or as an amendment to an existing CFO approval. (See 327 IAC 19-5-1)

Note: IDEM will review the proposal to assure that the performance standards in 327 IAC 19-3-1 will be met and the alternative will provide equivalent protection to the environment and human health.

What information should be provided when proposing an alternate design or compliance approach?

The CFO Application packet includes instructions for what forms and information must be submitted for a new CFO Approval or for an Amendment of an Existing CFO Approval. In addition to that information, applications proposing an alternate design or compliance approach should include the following information:

- A clear statement that the application proposes an alternate design or compliance approach under 327 IAC 19-5-1.
- A description of the particular rule requirement for which the alternate approach is proposed - including its citation.
- A detailed description of the alternate approach including documentation of how the performance standards in 327 IAC 19-3-1 will be met.
- Documentation addressing the criteria IDEM may use in evaluating the proposal. The criteria are listed in 327 IAC 19-5-1(b).

What types of alternative design will IDEM consider?

The CFO rule provides a lot of flexibility for alternative design and construction approaches that are equivalent or better in structural integrity and protecting human health and the environment. Here are examples:

- The CFO rule references design standards for concrete manure storage structures in 327 IAC 19-12-4(e). The standards include concrete specifications such as the thickness of walls, floors, footers and the size and placement of metal reinforcement. IDEM will approve alternative designs and concrete specifications that provide equivalent strength, performance and durability.

- The CFO rule contains minimum setback distances for waste management systems in 327 IAC 19-12-3 - including a 300 feet setback from surface water bodies. When proposing a waste management structure in a location that does not meet this minimum setback, an owner/operator may propose a drainage diversion berm or swale to direct a potential spill away from the surface water as an alternate approach to complying with the setback.

What are examples of operational alternatives?

The CFO rule provides a lot of flexibility for alternative operational approaches that are equivalent or better in protecting human health and the environment. Here are examples:

- Uncovered liquid manure structures are required to have freeboard markers to allow the CFO to visually monitor and maintain 2 feet of freeboard space or the amount required when the manure structure was approved (see 327 IAC 19-13-1(e)). Float-controlled alarm systems that activate when wastewater reaches critical levels would be considered an acceptable alternative to a marker.

- Another operational alternative that IDEM will consider is for CFOs with limited storage capacities that have a need to surface apply manure to frozen or snow-covered ground. The CFO rule contains a spreading allowance for CFOs with less than 120 days storage detention time (see 327 IAC 19-14-4(i)). The CFOs with greater than 120 days but less than 6 months storage time can request approval for an alternative compliance approach to the prohibition to surface apply manure to frozen or snow-covered ground. The proposal must detail site use limitations that serve to minimize the potential of manure constituents leaving the field. If approved, a CFO approval amendment will be issued detailing the allowance and referencing the approved plan.

How can the use of innovative technology be considered for a compliance alternative?

Manure handling technology is advancing with more affordable systems that improve dewatering and treatment or generate energy. These systems may allow for immediate processing and disposal of the manure, justifying a reduced storage capacity for the farm.

Modifying Approved Animal Numbers

This section describes how a CFO owner or operator may modify the number or type of animals allowed by their CFO Approval.

What type of approval do I need to modify the number or type of animals allowed by my CFO Approval?

The type of approval depends on the nature of the change. There are three options:

- An expansion that involves construction to increase the capacity for housing animals or increase the capacity for storing manure requires an approval for the new construction. The application requirements are similar to those for a CFO Approval for a new farm. The **CFO/CAFO Application Packet** (State Form 55051) provides forms and instructions for applying for an expansion of an existing operation involving construction.
- A change in animal numbers or animal type that does not involve construction, but increases the amount of manure the operation produces, requires an Amendment of Existing CFO Approval. (See note below.) The **CFO/CAFO Application Packet** (State Form 55051) provides forms and instructions for applying for an Amendment. The application will need to show that the change in animal numbers or animal type does not reduce the manure storage capacity in the affected structures below the minimum number of days of storage required by the regulations in effect at the time the structures were approved, or propose an alternate compliance approach that will mitigate the shortfall in storage. The application must also document adequate spreading acreage.
- An increase or decrease in animal numbers or a change in animal type that does not change, or that decreases the amount of manure the operation produces, requires submittal of a **Facility Change Notification** form (State Form 50209). IDEM will respond that the notification was received and no further approval is required. (327 IAC 19-8-3(b))

The CFO/CAFO Application Packet (State Form 55051) and the **Facility Change Notification** form (State Form 50209) are available at: http://www.in.gov/idem/5157.htm#olq_cafo .

Note: 327 IAC 19-6-1(c) and 327 IAC 19-8-3(a)(3) require an amendment when an increase in manure production reduces storage capacity below the minimum required at the time of the most recent approval. The CFO rule is silent on what is required if an increase in manure production does not reduce manure storage capacity below the minimum required at the time of the most recent approval. IDEM plans to clarify the rules on this issue in a future update. In the interim, IDEM will also require an amendment as allowed under 327 IAC 19-8-3(b) when an owner or operator notifies IDEM of an increase in manure production that they believe will not reduce manure storage capacity below the minimum required at the time of the most recent approval. For simplicity and expedient processing, this guidance recommends that an amendment application be submitted for any change to animal numbers or animal type that increases manure production. This will allow IDEM to verify that the CFO has adequate storage and spreading acreage, and will facilitate IDEM providing notice to local officials and adjoining land owners and occupants of the decision on the amendment.

What are some examples of expansions involving construction?

Constructing an addition to an existing barn that increases the capacity for housing animals or constructing additional manure storage capacity are expansions involving construction that require an expansion approval.

What are some examples of changes to animal numbers, animal type or manure production that do not involve construction?

- **Overstocking** – Overstocking involves receiving more animals than may be included in the permit to account for mortality that reduces the number of animals ultimately housed. The previous CFO rule recognized this activity as it allowed increases in the number of animals by up to 10% without triggering the need for an approval amendment. The new rule does not have this provision. Therefore, it is important that the CFO approval for a farm accurately reflect the maximum number of animals housed in a building at any one time. The primary consideration for approval of amendment requests is that the manure storage detention time for each specific building does not fall below the minimum detention time required by the regulation in effect at the time it was approved.
- **Double stocking** – Double stocking involves placing twice the number of piglets in a building originally approved for half as many finishing hogs. When the piglets reach a specific weight, half of the piglets are removed and transported to a different finishing building. The piglets require less space and do not produce as much manure as finishers; therefore a much larger number of piglets can be housed in the same building that would hold a lesser number of finishers. If double stocking piglets reduces the overall manure production this activity is eligible for a facility change notification. If double stocking increases the overall manure production in a building, then an approval amendment is required. Documentation submitted with the amendment application must show that the building still has the minimum detention time required by the regulation that was in effect at the time it was approved.
- **Reconfiguring an existing building** – Reconfiguring the layout of the interior of an existing building to use it for a different production process may change the number of animals housed and the amount of manure produced in that building. For instance, the interior of a farrowing barn may be reconfigured for use as a nursery. If the new configuration reduces the manure production of the building then this activity is eligible for a facility change notification. If the new configuration increases the overall manure production in a building, then an approval amendment is required. Documentation submitted with an amendment application must show that the building still has the minimum detention time required by the regulation that was in effect at the time it was approved.

On what dates in the history of Indiana's CFO program did the manure storage detention time requirements change?

Operations approved before July 1, 1993 were required to provide at least 90 days of manure storage detention time. Facilities approved from July 1, 1993 to March 11, 2002, were required to provide at least 120 days of manure storage detention time. Facilities approved on or after March 11, 2002 have been required to provide at least 180 days of manure storage detention time.

Public Notification, Comment Periods & Appeals

The applicant for a CFO Approval and IDEM are required to do certain things to inform and involve the public. This section describes the requirements for notifying the public that an application has been submitted; it describes how public comments can be submitted during the application review; it describes how the public is informed of the final decision; and explains how the final decision may be appealed.

CFO Approval Notification

Who needs to be notified? (See 327 IAC 19-8-7 and IC 13-18-10-2(b))

An owner/operator applying for a new CFO approval or an existing CFO seeking approval to construct additional confinement structures and/or manure storage structures must make a reasonable effort to notify by mail:

1. Each land owner and occupant of land adjoining the property on which the CFO is, or will be, located.
2. Each owner and occupant of land within one-half mile of the proposed or existing waste storage structures.
3. The office of the commissioners of the county in which the CFO is or will be located.

This written notification must be completed by the owner/operator not more than 10 working days ***after*** submitting the application. A "Notification of Application Submittal" form is included with the application. Owners/operators must use this form or develop their own. IDEM must approve any form developed by the applicant prior to use. The form must provide:

1. The date when the application was mailed or delivered to IDEM.
2. A brief description of the subject of the application (describe what structures you are requesting approval for including new structures or existing structures that are not already approved as part of the CFO).
3. The projected dates comments will be accepted by IDEM (33 days following the date of mailing the notice).

IDEM will notify the following parties once an application is received:

1. The applicant
2. County Health Department for the affected county(ies)
3. Mayors of any affected city(ies)
4. Town council presidents of affected town(s)

*Note: The intent of 327 IAC 19-8-7 is to provide the public with 33 days to review and comment on the application after receiving notice of the date that it was submitted to IDEM. The rule language uses the phrases "**after submitting** an application" and "the date on which the application **was submitted** to the department" [emphasis added] clearly signaling the expectation that the notice comes after the application was already submitted. IDEM may require an applicant to redo the notice if its content or timing does not meet the requirements of this rule or if its content is misleading.*

What notification documents must be included with the application?

The application includes two additional forms that must be completed and submitted:

- An affidavit stating that the owner/operator will provide the initial notice to the adjoining landowners and occupants, landowners and occupants of land within one-half mile of the confinement barns and manure storage structures and to the commissioners of the affected county.
- A copy of the form used to notify the above list of persons.

What will happen during the application review process?

IDEM staff who are reviewing the applications will conduct an immediate completeness review. If deficiencies in the application are noted, a letter will be mailed within 30 days. When the notice of application deficiencies are mailed, the review is placed on hold until the applicant provides the requested information.

Permit staff will also schedule a site visit to observe the proposed site and to inspect the existing operation if one exists. These visits are scheduled during the review period.

How can the public comment on an application? (See 327 IAC 19-8-7(b))

IDEM will accept written public comments for at least 33 days following the date of the applicant mailing to the notified parties. Because some applicants submit an incomplete application while they are still preparing the application in order to start the review process and public comment period, IDEM's practice is to accept comments for at least 33 days after receiving a substantially complete application so that the public has the opportunity to review all aspects of the application. Generally, IDEM does not reject public comments at any point in the process, and will consider any new information up to the point that the decision is issued..

During this period, any interested parties may submit written comments to:

Indiana Department of Environmental Management
Confined Feeding Permits Section
100 N. Senate Avenue
IGCN 1101
Indianapolis, IN 46204-2251

IDEM evaluates comments as they relate to the application's compliance with all applicable requirements. IDEM approves or denies the application based on fulfillment of the rule requirements. While environmental concerns may have an effect on an application, IDEM may not consider traffic, property values, or local zoning when considering an application.

When will a public meeting be held regarding an application?
(See 327 IAC 19-8-7(c))

IDEM may hold a public information meeting at a convenient location near the proposed farm or existing farm in appropriate cases where environmental concerns relevant to applicable rules or laws are raised.

How will the public learn of the decision on the application?

The approval or denial of the application will be mailed by certified mail to the applicant. All parties notified by the applicant or who commented on the application will receive a copy of the approval or denial by normal mail.

Do approval amendments and renewals include a public notice process?

Renewals do not include a public notification process unless it includes renewal of a construction approval and construction was not started at least 30 days before the expiration date of the construction approval (see *Can a construction approval be renewed?* on page 9). IDEM will notify adjoining landowners and County Commissioners when approving amendments to approvals and construction approval renewals that are subject to public notice requirements.

How is an IDEM decision appealed? (See 327 IAC 19-1-3)

The IDEM decision to approve, deny, revoke, amend, require an approval or impose additional requirements is appealable under the Administrative Orders and Procedures Act, IC 4-21.5. An appeal is initiated by filing a written petition for administrative review with the Office of Environmental Adjudication (OEA) within 18 days after the mailing date of the decision. The OEA is a separate agency from IDEM and is responsible for appeal decisions. An environmental law judge in the OEA will rule on the appeal.

The petition must identify the approval or decision for which a person seeks review including:

1. The farm identification number.
2. The name of the person or company to whom the approval or denial was issued.
3. The reasons justifying the request and issues proposed for consideration for a hearing.

More detailed appeal instructions accompany all IDEM approvals and decisions.

Plot Maps and Farmstead Plan

Plot maps and a farmstead plan that identify the location of the operation and the boundary of areas currently available for manure application must be submitted in the application to receive consideration for a CFO approval.

What types of maps are required for the plot maps? (See 327 IAC 19-7-2)

Plot maps must include:

1. A soil survey map from United States Department of Agriculture Natural Resources Conservation Service; and
2. A United States Geological Survey topographic map that identifies any public water supply wells and public water supply surface intake structures within 1,000 feet of the manure storage structure.

The maps are available from most Natural Resources Conservation Service (NRCS) and Cooperative Extension Service offices. Soils maps may be created at the NRCS Web Soil Survey site: http://websoilsurvey.sc.egov.usda.gov/App/HomePage.htm .

What must the plot maps show?

The maps must clearly show the following:

1. The location of the waste management systems.
2. The property boundaries of the confined feeding operation.
3. The boundaries of the livestock and poultry production areas.
4. The boundaries and owners of all manure application areas.
5. The available acreage of each manure application area after setbacks are calculated.

The soil survey maps satisfy the map requirement for the manure management plan referred to in 327 IAC 19-7-5(a)(3).

What must be in the farmstead plan? (See 327 IAC 19-7-3)

Copies of the farmstead map must be maintained in the operating record and submitted with new approval, new construction approval, amendment, renewal, facility change, and transfer applications. The farmstead plan must show all existing and proposed structures, including the most recent construction approval date for existing structures and the following known features within 500 feet of the proposed and existing confinement barn(s) or manure storage structure(s):

1. Surface waters of the state
2. Public and private roads
3. Water wells
4. Characteristics of karst terrain
5. Production area drainage patterns
6. Property boundary lines
7. All outfalls of known subsurface drainage structures including perimeter drain outfalls

8. Drainage inlets, including water and sediment control basins
9. Diversions of uncontaminated surface water
10. Mortality management sites
11. Any residence
12. The type and number of animals per structure

The farmstead plan must be clear and drawn to scale or show specific distances between the structures and features mentioned previously.

The plan must contain reference to true north and indicate any part of the CFO property within a 100-year flood plain.

The plan must be on paper that is no less than 8 ½ inches by 11 inches in size and can be no larger than 24 inches by 36 inches in size.

Waste Management System Drawings

This section describes the type of information required in waste management system drawings.

What must be in the waste management system drawings? (See 327 IAC 19-7-4)

The waste management system drawings of proposed structures must contain detailed views and necessary cross sections to define and show all dimensions and construction materials including the following:

1. Top view
2. End view
3. Side view
4. Detailed view of wall, footings and floor reinforcement steel and water stop placement
5. Location of seasonal high water table level relative to the base of waste storage system
6. Details of all applicable structural components related to the waste management system
7. Compressive strength of concrete expressed in pounds per square inch (psi)
8. Floor and wall construction joints spacing and details

Systems relying on gravity flow of water or manure must provide elevations of the entire waste management system that relies on gravity.

For technical assistance, refer to the NRCS Field Office Technical Guide (FOTG) Conservation Practice Standards #313 (Waste Storage Facility), and NRCS Construction Guidelines (Chapter 10, Appendix 10D – Design and Construction Guidelines for Waste Impoundments Lined with Clay or Amendment-treated Soil) and MWPS-36, Rectangular Concrete Manure Storages, Second Edition, Midwest Plan Service, as applicable.

Manure Management Plan

CFO owners or operators must submit a manure management plan (MMP) with all CFO approval and renewal applications.

This section describes the items required in a MMP and addresses questions on soil and manure testing.

What must be included in a MMP? (See 327 IAC 19-7-5)

A manure management plan must include the following:

1. Procedures for soil testing
2. Procedures for manure testing
3. Legible soil survey maps of manure application areas (Refer to "Plot Maps and Farmstead Plan" page 21)
4. If applicable due to marketing and distribution, a waiver to the requirement for access to land application acreage
5. Alternative method proposed for managing the manure, if applicable

Refer to the "Manure Management Plan" form in the CFO/CAFO Application Packet available on the IDEM website at : http://www.in.gov/idem/5157.htm#olq_cafo.

How often do I have to sample soil and manure? (See 327 IAC 19-7-5(c))

The soil test you use to calculate a manure application rate for a particular field must be no more than 4 years old on the date that you apply manure to that field. The manure test you use to calculate a manure application rate must be no more than 1 year old on the date that you apply the manure. A different frequency may be approved in your manure management plan. See the Manure Application Rates section of this guidance for more information on calculating application rates.

Before July 1, 2012, CFO Approvals and MMPs typically required soil and manure testing once every three years. CFOs operating under older approvals and MMPs may reduce their soil testing frequency to once every 4 years, but must increase their manure testing frequency to at least once a year. Existing CFOs must update their MMP to the new testing frequency in their next CFO approval renewal or amendment application.

Soil Testing Topics

What specific elements must soil be tested for? (See 327 IAC 19-7-5(c) and 327 IAC 19-14-3)

A normal soil fertility test will include phospohorus, potassium, and other soil characteristics, but phosphorus is the only element required in a soil test to comply with the CFO rules. Manure application rates for each field are limited based on the phosphorus soil test level shown in Tables 1 and 2 in 327 IAC 19-14-3. The soil phosphorus Bray P1/Mehlich 3 test must be used and soil phosphorus levels reported in parts per million (ppm).

Nitrogen is not a required element in a soil test. Nitrogen is not stable and persistent in the soil so N-based application rates are based on the crop's nitrogen requirements and the manure nitrogen content – not on a nitrogen soil test result.

Can I composite soil samples or average soil test results to calculate my application rates? (See 327 IAC 19-7-5(c))

Yes, you can use composite sampling techniques and average test results within areas of up to 20 acres. The CFO rules specify that a soil test must be obtained that provides sufficient information about soil fertility to allow for nutrient recommendations for existing or planned crops and soil tests may not represent more than 20 acres per sample. The following examples illustrate what you can and can't do:

- You can divide a field into areas of up to 20 acres and send at least one soil sample from each area to a lab for testing. You will use the test result to determine what application limits apply to each area. A soil test for a single "plug" or sample from 20 acres would not provide sufficient information about soil fertility to determine accurate nutrient recommendations so you should take a composite sample. For example, you can take multiple plugs or grab samples across a 20 acre area (12-15 samples is recommended), mix the samples in a container, and take one composite sample from the container to send to the lab. The composite sample test result will represent the 20-acre area. Your land application records should document the test result and the application rate you used in each area. You cannot composite samples from areas larger than 20 acres.

- You can average the test results of multiple composite samples collected within areas of up to 20-acres. For example, you might collect one composite for every 2 acres in a 20-acre area and send 10 samples to the lab. You can average the 10 test results to represent the 20-acre area. You cannot average the test results of samples taken from areas larger than 20 acres.

The CFO rules require your soil testing procedures to be specified in your manure management plan. This includes procedures related to compositing samples or averaging test results. See the resources listed at the end of this section for detailed guidance on composite sampling techniques.

Can I use grid sampling techniques when compositing samples or averaging soil test results?

Yes. Although not required, using a grid to determine the locations where you will take samples is a good practice that helps to plan your sampling, and helps to achieve representative results that account for variations in fertility across your fields. If using grid sampling techniques, you should describe the procedure in your manure management plan.

See the resources listed at the end of this section for detailed guidance on grid sampling techniques.

Manure Testing Topics

What requirements apply to the procedures for manure testing?
(See 327 IAC 19-7-5(d))

Manure tests must provide adequate information to calculate the appropriate manure application rate. At a minimum, the tests must include ammonium nitrogen, total nitrogen and phosphorus. One manure test must be completed each year for each type of manure land applied.

If manure from separate sources are mixed prior to land application, the test must be representative of the blended manures.

What specific elements must manure be tested for?
(See 327 IAC 19-14-3(b)and(d), manure application rates and 327 IAC 19-14-3(f)(7) record keeping requirement)

Manure tests must include ammonium nitrogen, total nitrogen and phosphorus. The maximum rate of manure application to a crop field is based on one or the other. Records of land application activities must include the calculation of how much nitrogen and phosphorus was applied per acre.

Can I composite manure samples from different manure storage structures to calculate my application rates? (See 327 IAC 19-7-5(d) & (e))

Yes, you can composite manure samples collected from barns with similar animals raised with similar diets and manure handling systems. The CFO rules require a sample from each unique production system. The following examples illustrate what you can and can't do:

- A swine operation with several finishing barns with deep concrete pits in which animals are of comparable size and fed the same feed ration could use just one manure test result from one composite sample to represent all of the finishing pit manures.
- A farrow to finish swine operation would require a separate test on the farrowing barn manure, gestation barn manure, and the finishing barn manure unless the

manure from these different production systems is blended together before being land applied.

- A turkey farm combines manure from the brooder house with manure from the grow out barns. The manure is mixed before loading and land application. A composite sample made from grab samples taken from several areas of the mixed manure pile can be used to test the turkey manure.
- A dairy operation directs freestall barn manure to a sand settling pit which overflows to a multi-cell earthen lagoon. Manure-laden sand is occassionally removed from the settling pit and land applied as a solid. The farm should test the lagoon wastewater and the sand settling pit manure separately. The results should not be averaged.

Other Topics

I own a new CFO constructed after July 1, 2012. Do I have to test soil and manure before land applying for the first time? (See 327 IAC 19-14-3(c))

You need soil and manure nutrient information to determine the nitrogen and phosphorus application rates for every land application event – including the first one. For soils, you must obtain new soil test results or use existing soil test results that comply with your manure management plan. Existing soil tests can be up to 4 years old. Each soil test can represent up to 20 acres.

The CFO rules provide an alternative to the manure testing requirement for new CFOs that are land applying for the first time. You may either test the manure using the procedures in your manure management plan, or you may use the manure nutrient values from the USDA NRCS Agricultural Waste Field Handbook, Chapter 4, dated March 2008. If using the USDA values, the application rate is limited to 50% of the calculated rate per acre. You must use your yearly manure test results for all subsequent land application events.

When can a CFO replace land use agreements with manure distribution documentation? (See 327 IAC 19-14-7)

IDEM considers marketing or distribution of manure to other users as an acceptable manure management practice. If a manure distribution program is used, IDEM may allow for a waiver of some or all of a CFOs land application acreage access. Refer to the “Marketing and Distributing Manure” section for additional information.

Where can I get more information regarding soil and manure sampling?

Collecting soil samples at land application fields and manure samples from the manure to be land applied are two critical steps in equipping yourself with the information necessary to make good nutrient management decisions. The Purdue Cooperative Extension Service has several free publications that offer sound advice on collecting manure and soil samples. You can access their website at www.ces.purdue.edu.

Recommended publications include:

- CES-227 How and Where to Obtain a Livestock Manure Analysis
- ID-300 Land Application Sampling and Records
- NCH-12 Managing Livestock Manure as a Source of Plant Nutrients
- AY-277-W Calculating Manure and Manure Nutrient Application Rates
- AY-281 Soil Sampling for P, K, and Lime Recommendations

Design and Construction Requirements & Site Restrictions for New Waste Management Systems

The requirements that apply to all new waste management systems are addressed in this section. The CFO rule contains site restrictions for new CFOs and expansions of existing CFOs. Example restrictions include proximity to streams, public water supply wells and on-site and off-site wells.

What are the setback requirements for new waste management systems? (See 327 IAC 19-12-3)

New waste management systems must be located to maintain the minimum setback distances from the following features known and identifiable at the time of application submittal, including:

1. 1,000 feet from a public water supply well or public water supply surface intake structure
2. 300 feet for liquid manure storage structures or 100 feet for solid manure storage structures from surface waters of the state, drainage inlets (including water and sediment control basins), sinkholes (measured from the opening or the lowest point) and off-site water wells
3. 100 feet from on-site water wells, property lines and public roads
4. 400 feet from existing off-site residential and public buildings

Do these setbacks apply to an existing structure being permitted for the first time? (See 327 IAC 19-12-1(a))

Structures built before the farm was expected to meet state requirements may not meet all of the setbacks. If one of the setbacks listed above can't be met, IDEM will determine if additional protective measures are necessary. An example would be an earthen berm to divert surface water flow from streams or wells. IDEM does not expect existing structures to be moved.

What kind of assessment must be conducted on the soils where the manure storage structures are proposed? (See 327 IAC 19-7-1(c)(6))

The applicant must use soil borings or test holes to determine the soil characteristics and the presence or absence of a seasonal high water table at the site of the manure storage structure. The following requirements apply to the soils and water table assessment:

1. The testing must be conducted by a certified soil scientist, a certified geologist, or an engineer registered in Indiana.
2. Soil sampling must follow guidance in the NRCS national engineering manual (NEM) IN531-2.
3. The number of test holes varies with the type and size of the storage structure as follows:
    a. For earthen solid manure storage structures, at least 2 holes for a structure up to 1 acre in size, then an additional hole for each additional half acre.
    b. For liquid manure storage structures, at least 2 holes for a structure up to one-half acre then an additional hole for each additional half acre.
    c. For concrete solid manure storage structures, at least 2 holes regardless of size.
4. The required depth of test holes varies as follows:
    a. At least 2 feet below the base of a concrete manure storage structure.
    b. At least 5 feet below the base of an earthen manure storage structure except in karst topography where at least one test hole must go 10 feet below the base of the storage structure or to bedrock, whichever is shallower.
5. The applicant must submit documentation that adequately characterizes the soil and water table including the soil boring or test hole information required in 327 IAC 19-7-1(c)(6). A soils log identifying the soils using the Unified Soil Classification System and showing the location of the seasonal high water table must be shown on or provided with the plans for the manure storage structure.

    For liquid manure storage structures located within Karst areas, as identified on IDEM's Karst map or IGS map, the "Preliminary Site Evaluation of CFO in Mapped Karst Areas" investigation form (See Appendix XII) must also be completed and submitted. You may obtain site-specific information regarding the presence of karst terrain by requesting IDEM's map titled "Karst Areas of Indiana Where Confined Feeding Operations are Restricted" and the Indiana Geological Survey's (IGS) website (www.igs.indiana.edu).

Note: Post-construction earthen liner testing should follow these same testing frequencies

What are the restrictions for building a manure storage structure in areas with a seasonal high water table? (See 327 IAC 19-12-2(a))

The base of manure storage structures, including the liner, must be completely above the seasonal high water table. The water table may be lowered to meet this requirement as described in more detail in the question below on liner design options.

Are there any soil types that restrict where I can build a solid manure storage structure? (See 327 IAC 19-12-4(g))

Solid manure storage structures must not be built on sand or gravel soil under the Unified Soil Classification of Pt, GW, GP,GM, GC, SW, SP and SM, unless the structure is constructed with one of the approved liner configurations described in the question below on liner configuration options.

What are the liner/floor design options for manure storage structures?

Following are three approved liner design options for both solid and liquid manure storage structures:

1. A 5-inch thick concrete liner with adequate reinforcement steel, adequate control joint spacing based on subgrade drag theory, and a 4,000 psi, 28 day compressive strength. The bottom of the concrete liner must be completely above the seasonal high water table. The water table may be lowered with a perimeter drain if necessary. The concrete liner must be constructed according to the Indiana NRCS specification, Concrete Construction, October 2005, available online at: http://www.in.gov/idem/6932.htm
2. A constructed clay liner at least 1 foot thick with a maximum seepage rate of 1/16 cubic inch per square inch per day. The liner must be installed in a series of lifts by placing 6-9 inches of soil down and compacting the lift using one of the methods described below in number 5. This option requires soil permeability and compaction density testing after construction and a seepage rate calculation for the soil based on the test results. The bottom of the 1-foot thick soil liner must be completely above the seasonal high water table. The water table may be lowered with a perimeter drain if necessary.
3. In-situ clay soils at least 3 feet thick with a maximum seepage rate of 1/16 cubic inch per square inch per day. This option requires the permeability testing of the in-situ clay soils and the seepage rate calculations for the soils based on the permeability data to be conducted and submitted with the application to verify the suitability of the soil to serve as an in-situ liner. At least the top 6 inches must be scarified and then re-compacted. The bottom of the 3 feet thick in-situ soil liner must be completely above the seasonal high water table. The water table may be lowered with a perimeter drain if necessary.

There is an additional liner design option for liquid manure storage ponds:

4. Flexible membrane liners for liquid manure storage ponds when soils appropriate for earthen liners are unavailable and /or special groundwater quality concerns exist due to site conditions.

There is an additional floor design option for solid manure storage structures:

5. An earthen floor without a liner may be used if the following requirements are satisfied:
    a. There are no sand or gravel soils (Pt, GW, GP,GM, GC, SW, SP, SM, and SC) within 5 feet of the surface of the earthen floor.
    b. The seasonal water table is at least 5 feet below the surface of the earthen floor. The water table may be lowered with a perimeter drain if necessary.
    c. The earthen floor is scarified if appropriate, as described above, for in-situ soils and re-compacted using one of these methods:
        i. Tamping Roller (Sheepsfoot): A minimum of 3 passes with a contact pressure of at least 100 psi, towed at speeds not exceeding 5 miles per hour (mph).
        ii. Pneumatic Roller (Rubber Tire): A minimum of 3 passes with a wheel load of at least 18,000 pounds, a tire pressure of 80 psi and towed at a speed not exceeding 5 mph.
        iii. Loaded Earth Moving Equipment: A minimum of 3 passes with a wheel load of at least 10 psi, towed at speeds not exceeding 5 mph.

Perimeter drains used to lower a seasonal high water table at a solid manure storage structure must be constructed in compliance with the requirements in 327 IAC 19-12-4(n) and (o). For information regarding these requirements, refer to the Section of this Guidance titled “Perimeter Drain Systems”.

What are the liner/floor design options for manure storage structures located in karst terrain?

Solid and liquid manure storage structures located within Karst areas may use the liner design options noted above.

Solid manure structures may also use the earthen floor option with the additional requirement of post-construction seepage testing verifying 1/16 cubic inch per square inch per day on the top 1 foot of the earthen floor.

Can you build a solid or liquid manure storage structure over a mine?
(See 327 IAC 19-12-2(a))

There are two types of mines in Indiana. The prohibition of building a CFO over a mine is applicable only to subsurface (underground) mines. Many surface pit mines have been reclaimed over the years and the properties returned to the farming community for agricultural purposes. The IGS’s website (www.igs.indiana.edu) provides site-specific information regarding the presence of mines. You may also contact the Indiana Department of Natural Resources, Division of Land Reclamation, Abandoned Mine Lands Section at (812) 665-2207 to determine if mines are present.

What are the restrictions for building a manure storage structure in areas with wetlands? (See 327 IAC 19-12-3(2))

Sites that have not been developed because of poor drainage or a seasonally high water table should be carefully assessed before selected as a waste management structure location. As part of the initial site assessment, wetlands and jurisdictional waterways should be identified. Construction activities that result in filling, draining, or otherwise impacting wetlands and jurisdictional waterways are prohibited without authorization of IDEM and/or the Army Corps of Engineers.

During planning of a proposed parcel, it is best to have a delineation completed to identify resources that may be regulated. A delineation will identify a parcel that may not be suitable for development, identify areas to which impacts can be minimized, or identify those areas that should be avoided. Wetland delineations performed 5 or more years in the past are not considered valid and a new delineation must be performed to adequately assess wetlands on the proposed site. In addition, determinations performed by the NRCS for the purpose of row crop production may be insufficient in determining if a parcel of land is suitable for CFO development. Delineations and other resource information that was used in the site assessment should be submitted to IDEM for review before any development activities affecting suspected areas of wetland concern. If unavoidable, proposed impacts to wetland and water resources will require authorization, which can result in project delays, costly delineation, and mitigation requirements to offset the impacts. Impacting wetlands and jurisdictional waterways without authorization are violations and may result in restoration, mitigation, and civil penalties.

The program requires setbacks from certain water resources. The required setback to surface waters of the state is 300 feet for liquid manure storage structures and 100 feet for solid manure storage structures. Any wetland area within 500 feet of a proposed structure should be identified on the facility farmstead plan. If setbacks cannot be met, IDEM has considered and approved berms to protect surface waters and wetland areas by diverting run-off away from these areas. This approval is on a case by case basis.

Additional information related to wetlands can be found on the website at http://www.IN.gov/idem/4870.htm.

Are there requirements for controlling storm water run-off at construction sites?

Land disturbing activities of one acre or more will also require “Construction Site Run-Off” permit. The purpose of this permit is to minimize the discharge of pollutants, principally sediment as a result of land disturbing activities. Land disturbance, in relation to the Construction Site Run-Off permit is defined as “Land disturbing activity,” means any manmade change of the land surface, including removing vegetative cover that exposes the underlying soil, excavating, filling, transporting, and grading.

Activities that meet the applicability requirements for “Construction Site Run-Off” must obtain permit coverage prior to land disturbance; which includes the development and submittal of a construction/storm water pollution prevention plan for review. Upon review

of the plan, the project site owner is required to submit of a Notice of Intent. Information related to plan submittal is based on the location of a project and plans will either be submitted to the County Soil and Water Conservation District or a designated city/county Municipal Separate Storm Sewer System entity. Information related to plan submittal and permit coverage can be found at http://www.in.gov/idem/4902.htm.

Are there restrictions to building manure storage structures near streams or rivers? (See 327 IAC 19-12-2)

Due to concerns for manure being washed out of a manure storage structure and into waters of the state, there are two different restrictions related to floodplains and floodways. First, constructing in a floodway is strictly prohibited. The floodway is the most hazardous section of the floodplain because of its depth and velocities. The second restriction is related to construction within the 100 year floodplain. The wording in 327 IAC 19-12-2(a)(3) is incorrect. It should require that waste management system access be 2 feet above the 100 year flood elevation. To address this error, IDEM requires the following alternate design standards under 327 IAC 19-4-1(c) for manure storage structures in flood plains. The base of structures for solid manure must be at least 2 feet above the 100 year flood elevation. Structures for liquid manure must have all access to manure storage at least 2 feet above the 100 year flood elevation; and the design must account for hydrostatic pressure on the structure from the seasonal high water table and from flood waters during a 100 year flood event.

What are the capacity requirements for liquid manure storage structures? (See 327 IAC 19-12-4)

All new liquid manure storage structures must be designed, constructed and maintained with a combined storage capacity of at least 180 days of storage for all materials entering the manure storage structure including:

1. Manure, wastewater, bedding (if applicable) and other wastes accumulated during the storge period. (refer to Table 1 in this section for average manure production volumes listed in the ASAE document D384.2)

2. Normal precipitation, less evaporation, on the surface area (at the design storage volume level) of the facility during the storage period.

3. Normal runoff from the facility's drainage area during the storage period.

4. The 25-year, 24-hour runoff from the facility's drainage area. In Indiana this would range from 5.0 to 5.5 inches of rain.

5. Residual solids after liquids have been removed. A minimum of 6 inches must be provided or an additional 5 percent of the above totals, to account for loss of storage due to incomplete removal of solids.

6. Additional storage as may be required to meet management goals.

7. For structures exposed to rainfall, 2 feet of freeboard over the above totals to account for the 25-year, 24-hour storm event. For structures not exposed to rainfall, an additional 6 inches of freeboard over the above totals.

What are the capacity requirements for solid manure storage structures?
(See 327 IAC 19-12-4)

All new solid manure storage structures must be designed, constructed and maintained with a combined storage capacity of at least 180 days of storage for all materials entering the manure storage structure including:

1. Manure, and bedding if applicable. (refer to Table 1 on the next page for average manure production volumes listed in the ASAE document D384.2)

2. Uncovered solid manure storage structures must also provide containment and storage capacity for precipitation falling on the storage area and area draining into the storage area from normal average rainfall and a 25-year, 24-hour storm event. Runoff from uncovered structures is considered manure and must be treated or stored in an earthen lagoon or a concrete tank.

3. 6 inches of freeboard over the above totals.

Table 1.
Manure Production Values for Calculating Storage Requirement Volumes

System	Units	Total Manure[1,2]	Moisture, %
Swine			
Nursery Pig	cubic ft/day	.038	90
Grow/Finish	cubic ft/day	.166	90
Farrow (S&L)	cubic ft/day	.41	90
Breed/Gestation	cubic ft/day	.18	90
Dairy			
Calf	cubic ft/day	.30	83
Heifer	cubic ft/day	.78	83
Cow (90 lb milk/day)	cubic ft/day	2.4	87
Dry cow	cubic ft/day	1.3	87
Veal calf	cubic ft/day	.12	96
Beef			
Feeder calf	cubic ft/day	.81	88
Fattening cattle	cubic ft/day	1.04	92
Mature cow	cubic ft/day	1.3	88
Poultry			
Broiler	cubic ft/day	.0035	74
Pullet	cubic ft/day	.001	75
Layer	cubic ft/day	.0031	75
Turkey (toms)	cubic ft/day	.009	74
Turkey (hens)	cubic ft/day	.006	74
Turkey brooder poults[3]	cubic ft/day	.00225	74
Duck	cubic ft/day	.0063	74
Sheep			
Ewes	cubic ft/day	.11	
Lambs	cubic ft/day	.04	
Horse	cubic ft/day	.91	85

[1]Except for turkey brooder poults, these values were adapted from ASAE Manure Productions and Characteristics Standard D384.2 (2005).

[2]Prior to any changes due to dilution water addition, drying, volatilization or other physical, chemical or biological processes.

[3]The value for turkey brooder poults comes from a study at Farbest Farms in January 2013.

What are the leachate storage capacity requirements for silage and haylage storage structures?

All new silage and haylage storage structures must be designed, constructed and maintained with a capacity of at least 180 days of storage for all liquids from the storage structure including:

1. Leachate from silage and haylage. Leachate production varies, but IDEM generally uses 5 gallons per ton as a rule of thumb. Other values may be justified.
2. Uncovered silage and haylage storage structures must also provide containment and storage capacity for precipitation falling on the storage area including normal average rainfall and a 25-year, 24-hour storm event.

What requirements apply to tanks used for manure storage?
(See 327 IAC 19-12-4(j & k))

Underground steel storage tanks may not be used for manure storage. Plastic and fiberglass tanks and above-ground steel tanks must meet following requirements:

1. Tanks must have sufficient strength to withstand design loads.
2. All tanks must be watertight.
3. Tanks previously used to store objectionable or hazardous substances must be cleaned to remove all traces of that substance before manure is put in the tank.
4. Tanks must be designed and installed to ensure the seasonal high water table is maintained below the tank or the tank is anchored to prevent flotation during seasonal high water.
5. Above-ground tanks must have protected shut-off valves for all inlet and outlet pipes.

What requirements apply to stockpiling and staging manure?
(See 327 IAC 19-14-4(c))

Stockpiling solid manure at a CFO is subject to the design standards of a solid manure storage structure. Stockpiling is considered a storage method at the production area whereas staging is temporary storage at the land application site. Outside stockpiling is only permitted at CFOs with this manure management technique included in the approval.

What requirements apply to Vegetative Management Systems?
(See 327 IAC 19-12-4(l))

Vegetative management systems must be constructed according to the NRCS Conservation Practice Standard Code 635: Vegetated Treatment Area, October 2008. These systems must be maintained to provide effective treatment of runoff.

What requirements apply to Constructed Wetlands? (See 327 IAC 19-12-4(m))

Constructed wetlands must be constructed according to the NRCS Conservation Practice Standard Code 656: Constructed Wetland.

What requirements apply to Manure Digesters or other Energy Recovery Systems? (See 327 IAC 19-13-2 and IC 13-20-10.5)

A digester or energy recovery system located on the premises of a CFO or CAFO that only receives biomass or appropriate feed stock must be approved through the approval processes for CFOs. The **"Biomass Digester/Gasification Facility Registration Application"** (State Form 55309) lists the additional information you must submit for approval of a digester. If a digester or energy recovery system at a CFO or CAFO plans to receive solid waste other than biomass and appropriate feedstock, a Solid Waste Processing Permit is required. The materials considered biomass and appropriate feedstock are listed below.

What materials are considered biomass? (See IC 13-11-2-16.6)

- Agricultural crops
- Agricultural wastes and residues
- Wood and wood byproducts, including the following:
    - Wood residue
    - Forest thinning
    - Mill residue wood
- Animal wastes and byproducts, including manure
- Aquatic plants
- Algae
- Byproducts of processing agricultural crops

What materials are considered appropriate feedstock? (See 329 IAC 11.5-2-2)

- Food waste
- Cooking oil and grease
- Industrial waste, such as paper pulp
- Sewage sludge
- Off-spec or unused animal feed that are nonindustrial waste sources
- Dried distillers grain
- Food waste from food manufacturing industry and from food services industry
- Pallets

Do I have to notify IDEM before beginning construction? (See 327 IAC 19-12-4(r))

Yes. You must notify IDEM at least 2 days before construction of a confinement building, waste storage structure or other waste management system begins. If you build the CFO in phases, you must notify IDEM before beginning each phase. A "**Construction Notification**" form (State Form 50210) will accompany the CFO approval or can be duplicated from the record book to be used for the notification process.

IDEM will conduct random inspections on approved operations during construction. These inspections verify that construction is consistent with the approved plans. IDEM's review during these inspections includes, but is not limited to, structure location, concrete compressive strength, grades of reinforcement steel, wall and floor thickness and the reinforcement steel spacing in walls and floors.

IDEM generally takes enforcement action if construction notification is not provided as required.

Do I have to notify IDEM upon completing construction?
(See 327 IAC 19-12-4(d & s))

Within 30 days after completing construction of an approved waste management system, and before introducing animals or manure, the owner/operator must submit a "**Construction Completion Affidavit**" form (State Form 51255) to IDEM certifying that the waste management system was constructed and will be operated in accordance with the individual operation's approval and the CFO rule.

In addition, all liquid manure storage facilities **approved after July 1, 2012** must be certified upon completion by a registered professional engineer on a form provided by IDEM. A "**Construction Completion Affidavit**" (States Form 51255) and PE Certification Form (State Form 55052, 55053, or 55716 if applicable) will accompany the CFO approval or can be duplicated from the IDEM CFO Record Book to be used for the notification process.

CFO construction approvals often include multiple confinement barns and waste storage structures. Some waste management systems are designed to have multiple components. Operators are allowed to build and operate portions of their approved structures as long as the waste storage detention time provides a minimum of 180 days storage. The CFO must submit multiple Construction Affidavits if only a part of the approved structures are built and the operator wants to populate the barn and/or begin storing manure.

An example would be constructing only 1 of 2 approved swine barns the first year after the approval was issued and waiting to construct the second barn until the second year. The producer would send an affidavit to IDEM within 30 days after completing each of the swine barns and before populating them. If the barns were approved on or after July 1, 2012, a PE Certification (State Form 55052, 55053, or 55716) must accompany the "**Construction Completion Affidavit**" form (State Form 51255).

Perimeter Drain Systems

The CFO rule prohibits waste management systems in soil types expected to have a seasonal high water table unless the water table is lowered to keep the water table below the bottom of the waste management system (See 327 IAC 19-12-2(a)(5)). The design requirements for drainage systems used to lower the water table are in 327 IAC 19-12-4(n) and (o). This section describes the information that you need to submit with an application for any waste management system that requires a perimeter drain.

What design information is required for perimeter drain systems?
(See 327 IAC 19-12-4(o)(1) and (2))

1. A plan view of the perimeter drain system showing and identifying:
   - The perimeter drain around the sides of the concrete or earthen pit, pipe diameter and pipe slope.
   - The piping from the corner of the pit to the observation/sampling standpipe (or sump if a pumped system is required).
   - The observation/sampling standpipe with closure valve (or sump if a pumped system is required) (327 IAC 19-12-4(o)(5)). The standpipe should have a minimum diameter of 12 inches.
   - The discharge pipe from the observation/sampling standpipe to the outlet point (or from the sump if a pumped system is required).
   - Identify whether the drain pipe is perforated or non perforated. (Non-perforated pipe is needed from the observation/sampling pipe forward to outlet.)
   - The rock discharge and infiltration area if a pumped discharge is required.
   - Diameter of the sump (if pumped system).
   - Elevations of the pipe at the corners of the concrete pit, the inlet to the observation/sampling pipe (or sump) and the discharge outlet. (Elevations can be identified by referencing from the top of the footing.)

2. A profile or cross section(s) view of the perimeter drain system identifying:
   - The elevation of the drain at the corners of the concrete or earthen pit.
   - The elevation at the inlet to the observation/sampling pipe (or sump).
   - The elevation at the gravity discharge outlet.

3. A detail showing the installation of the perimeter drain within a granular backfill identifying:
   - The depth of granular fill surrounding the drain.
   - The location of drain with relation to the footing (include dimensions from footing).
   - The type of granular fill used.

What design information is required for a pumped perimeter discharge system? (See 327 327 IAC 19-12-4(o)(1))

Identify the sump material and diameter. The diameter must be large enough to accommodate the pump, its piping and electrical connections, electric penetrations and water level controls. Items of consideration affecting the required diameter of the sump are:

- Pump dimensions. Will the pump fit inside the sump?
- Connections between the sump-pump and the discharge line. Sumps should be at least one foot in inside diameter.
- The sump and bottom must be solid. A vented cap should be used to enclose the top of the sump.

1. Identify the operational characteristics of the pump, its pumping capacity (gpm).

2. Provide details showing the connections in the sump for:
   - The perimeter drain inlet at the bottom of the sump.
   - The discharge pipe at the outlet of the sump (watertight).

3. Identify the electric service at the sump on the farmstead plan; where the electric service comes from (327 IAC 19-12-4-(o)(3)). A service disconnect at the sump is recommended.

4. Describe the controls used to activate the pump. What means are used to alert pump failure?

5. Identify a source of backup power.

6. A spare pump is also required (See 327 IAC 19-12-4-(o)(3)).

7. Locate the rock discharge zone and vegetative filter area on the farmstead plan and indicate its size with dimensions (See 327 IAC 19-12-4(o)(4)(A) and (B)).
   - The rock discharge zone must be at least 50 feet away from the side wall of the concrete or earthen pit.
   - The vegetative filter area must be set back from property lines by the following minimum distances:
     - 50 feet in soils with a permeability of 0.50 inch per hour or less.
     - 20 feet in soils with a permeability greater than 0.50 inch per hour.

Which plans need to detail the perimeter drain system? (See 327 IAC 19-7-3(a)(7))

Identify the location of the outlet for the perimeter drain on the farmstead map and the perimeter drain plan. If a gravity outlet is used, show the perimeter drain outlet with its elevation. Evidence may be required to show flow can be obtained.

Operating Record Requirements

The owner/operator of a CFO must maintain operating records for the facility and make those records available on site for review by IDEM compliance inspectors. Refer to the record book for sample record sheets that meet all operating record requirements.

What must be in the operating record? (See 327 IAC 19-9-1)

The following information must be maintained and updated in the operating record:

1. All valid approvals, amendments, renewals, and notifications relevant to the approval
2. A copy of the most recent approved application and supporting documents resulting in the last CFO approval letter
3. Farmstead plan
4. Manure management plan
5. Ground water monitoring plan (when required)
6. Storm water management certification form for CFOs only
   (CAFOs must record their storm water management activities in their operating record. Please refer to "Storm Water Management for CAFOs and NPDES CAFO Individual Permit Holders" section for additional information.)
7. Any certifications from professional engineers as required when constructing structures approved after the effective date of the CFO rule
8. Copies of the construction start notices and construction completion affidavits submitted to IDEM
9. Record of weekly self-inspection reports for the past 5 years;
10. Emergency response plan and documentation of any spill response implemented by the CFO within the past five years
11. The calculation for the minimum acreage needed per year for manure application*
12. Land use agreements for manure application land not owned by the CFO
13. Justifications of nitrogen losses accounted for in calculating manure application rates
14. Manure land application records for the past 5 years.* The records must include:
    a. Expected crop yield of the field
    b. The date the manure was applied
    c. Precipitation events for 24 hrs prior to the application until 24 hours after the application
    d. Description of methods used to sample and analyze the manure and soil samples
    e. Results of the manure and soil tests
    f. Narrative explaining the basis for determining the manure application rates
    g. Calculations of the nitrogen and phosphorus applied to each field
    h. Method of application
    i. Dates of inspections of land application equipment
    j. USDA soil survey maps of land application sites
    k. Type of manure applied

   l. A written conservation plan prior to application on highly erodible land unless the land has crop cover or 40% or more crop residue. CAFOs operating under an NPDES CAFO Individual Permit must develop a nutrient management plan prior to applying to highly erodible land.

15. Documents regarding any emergency land application on frozen or snow covered ground
16. Spray irrigation plan if applicable
17. Documents regarding land application site monitoring activities
18. If applicable, records from the past 5 years of any person who received or purchased more than 10 cubic yards of dry manure or 4,000 gallons of liquid manure in a year. The following must be maintained:
    a. Name and address of the person who received or purchased the manure
    b. The amount of the manure received
    c. A copy of the manure information sheet.
19. Documentation of maintenance on liquid manure storage structures
20. Copies of the written waivers if there is any reduction in property line setback distances
21. All required permits issued by IDEM

*Marketing and distribution records can replace manure land application calculations and records when fulfilling the MMP requirements.

Maintenance Requirements

All waste management systems must be maintained and operated as they were approved in the design plans submitted in the site approval. Any specific approval conditions for an operation will be listed in the IDEM approval. The owner/operator must maintain all components of the approved waste management system.

What maintenance must be done? (See 327 IAC 19-13-1)

1. Records of weekly inspections of all waste management systems must be completed and maintained.

2. Uncovered liquid manure storage structures must maintain a minimum of 2 feet of freeboard unless specified differently in the approval. Freeboard is the distance between the top of the stored manure and waste liquid and the overflow level of the storage structure. This depth of freeboard minimizes the potential for a discharge during large rain events.

3. Uncovered liquid manure storage structures must have clearly identified markers to indicate manure levels relative to the freeboard requirement. These markers must be observed at least weekly and recorded in the weekly self inspection reports.

4. Earthen berms for manure storage structures must be stabilized and maintained to prevent the growth of trees and shrubs and allow for visual inspections for erosion or animal damage. The berm may be stabilized with vegetation or alternative erosion control measures. Rodent and erosion damage may be subtle but must be controlled to prevent structural damage.

5. An owner/operator who plans to use an approved vegetative management system must operate and maintain the system to provide effective treatment.

6. Migration of solids from feedlot runoff must be prevented unless the runoff is directed to an approved waste management or treatment system.

7. Waste management systems shall be designed and maintained to allow for proper solids removal from the storage structures without damaging the structure and or structure liners.

Emergency Response Plan

CFOs must have an emergency response plan to provide a quick and effective response to a release of manure. It should outline detailed steps that will be taken to contain and manage a release in the event one occurs. A copy of the emergency response plan is to be maintained in the farm operating record.
(See 327 IAC 19-13-4)

When must the plan be written?

Existing CFOs must maintain an updated Emergency Response Plan. A copy of the plan muist be kept in the farm operating record. A copy should be accessible for easy implementation if needed. Newly permitted CFOs must have their plan written when the barns are populated.

What must be included in an emergency response plan?

The CFO must develop an emergency response plan that:

1. Contains procedures to:
    a. Contain a manure release to prevent it from entering waters of the state
    b. Locate the source and stop the release of manure or waste liquid
    c. Return the manure or waste liquids to an approved storage structure
    d. Land apply the collected manure or waste liquid
2. Includes the names and telephone numbers of persons identified as responsible for implementing the plan.
3. Identifies areas where potential manure releases can occur and their corresponding drainage points. Transport activities should also be considered.
4. Identifies the equipment and cleanup materials that will be used in the event of a manure release.

When must the plan be implemented?

The plan must be implemented anytime a manure release occurs. If a manure release reaches waters of the state, the CFO must:

1. As soon as possible, but within 2 hours of discovery, communicate a spill report to the IDEM Emergency Response Line: (Toll Free) 1-888-233-7745 for in-state calls; (317) 233-7745 for out-of-state calls.
2. Submit to IDEM's Emergency Response Section a written copy of the spill reported, if requested by IDEM.
3. Document efforts to notify the following:
    a. For manure releases to surface waters that cause damage, notify the nearest affected downstream water user located within 10 miles of the release.
    b. For manure releases to soil outside the CFO boundary, notify the affected property owner or occupant of that property.

Land Application of Manure

One of the main environmental concerns associated with confined feeding is the potential for water pollution when land application is not managed properly. Indiana's confined feeding program includes requirements intended to maximize the benefit of manure as a crop nutrient while minimizing the risk of pollution.

This section explains the CFO rule requirements related to land application and provides guidance to help owners and operators implement effective manure management and land application programs. (See 327 IAC 19-14)

When do the CFO land application rules apply? (See 327 IAC 19-14-1)

When the CFO owner or operator controls the land application of manure, litter or process wastewater originating from the CFO, the activity is subject the requirements of the CFO rule. A CFO owner or operator controls the land application if they determine where the manure is applied, how it is applied, when it is applied, and how much manure is applied to a site. This includes when a CFO owner or operator hires a custom manure applicator to apply the manure.

What documentation is required for land application acreage?
(See 327 IAC 19-14-2)

Acreage used to satisfy the minimum acreage requirement for the farm must be documented in the operating record. If the acreage is not owned by the CFO, a land use agreement must be signed by the land owner or person in responsible control of the property. The agreement must identify the location of the land and the available acreage after calculating the setback areas. If a neighboring property owner waives setbacks to property lines, the CFO owner must keep the written waiver in the farm operating record.

How do you calculate the minimal acreage required for land application?
(See 327 IAC 19-14-2)

In determining the minimum amount of acreage needed, several factors must be considered:

1. What is the nutrient content of the manure? The manure analysis will provide details.
2. What is the field crop nitrogen and phosphorus needs based on average crop yields?
3. Are the fields eligible for nitrogen based application rates? Soil analyses will detail the soil phosphorus levels which may dictate that rates be based on phosphorus instead of nitrogen. Refer to the "Manure Application Rates" section for additional information pertaining to when phosphorus limited rates apply.
4. What is the calculated manure application rate for the fields planned to be used?
5. What is the estimated amount of manure and process waste water to be land applied per year?

Considering the answers to those questions, a farm can calculate the minimum amount of acreage needed per year to land apply a year's worth of their manure.

How do permit applicants for a new undeveloped farm estimate the minimum amount of acreage needed for satisfying the permit application requirements?
(See 327 IAC 19-14)

For farms that are not yet developed, the applicant must estimate the minimum number of acres needed using average values for manure nitrogen content. The following table provides a means of making that estimate for the different species and type of animals regulated. An example calculation follows.

Manure Application Land Base Estimates

Animal Capacity/Acre/Year*	**Solid**	**Liquid**	**Lagoon**
Swine:			
Nursery Pigs	100	80	320
Grower/Finishing	22	17	65
Farrowing (S & L)	14	13	40
Breeding/Gestation	29	25	90
Dairy:			
Dairy Calves	29	23	105
Heifers	6	5	18
Cows	3	2	9
Veal Calves	28	21	100
Beef:			
Feeder Calves	11	9	40
Fattening Cattle	5	4	16
Mature Cows	7	5	20
Poultry:			
Broilers	720	490	2725
Pullets	600	500	2660
Layers	420	300	1745
Turkeys	365	165	700
Turkey Poults	642		
Ducks	500	465	1975
Sheep:			
Ewe	17		
Lambs	36		

*Based on available N for a 150#N/acre application rate and a one-time facility capacity with full year use, not animals produced per year. Acreage values and dilution ratio recommendations can be found in Bulletin ID 101 (available through the School of Agriculture, Purdue University). Additional dilution information can also be found in the NRCS Agricultural Waste Management Field Handbook, or Pork Industry Handbook (PIH) 63.

Example: Hog operation "A" plans to produce at a one-time capacity of 10,000 finishing hogs in a liquid manure management system. According to the "Liquid" column and "Grower/Finishing" row, 17 pigs would produce manure for one acre at the 150 pounds of the potentially available nitrogen limit. Therefore, 10,000 pigs divided by 17 equals 588 acres per year needed for manure application. 10,000/17 = 588 acres

If the farm sells or gives away the manure to others, a reduction in the minimum amount of acreage needed can be justified after the farm has at least three years of documentation of that distribution, or contracts for the entire approval term for marketing the projected amount of manure produced at the facility. The type of documentation to be collected is detailed later in the "Marketing and Distributing Manure" section (also see 327 IAC 19-14-7).

How are manure application rates determined? (See 327 IAC 19-14-3)

CFOs must consider several factors in determining the proper land application rates. Refer to the "Manure Application Rates" section for additional information.

What record-keeping requirements apply to land application?
(See 327 IAC 19-14-3(f))

Records of manure application activities must be kept in the farm operating record. IDEM has developed a record form that can be used or the farm may use a different form if all the required information is provided. This information includes:

1. Field-specific information including expected crop yields.
2. The date of application.
3. Any precipitation events during the application and 24 hours before and after application.
4. The methods used for manure and soil sampling and analysis.
5. The results of the manure and soil sampling.
6. A brief explanation of how the application rate was determined.
7. Calculations of the nitrogen and phosphorus applied per acre to each field.
8. The calculated total nitrogen and phosphorus applied to each field.
9. The application method used to apply the manure.
10. Dates of inspection of the land application equipment.
11. USDA maps of the currently available land application sites.
12. The type of manure applied.
13. A copy of the Conservation Plan which must be written before applying manure to highly erodible land if identified as such by the NRCS Soil Survey .

What restrictions exist for handling and transporting manure?
(See 327 IAC 19-14-4)

There are restrictions that apply to manure application activities including staging dry or dewatered manure, transporting manure, applying to frozen or snow-covered ground and spray irrigation.

Dried or dewatered manure can be transported and staged on the fields where manure is being land applied. Staging restrictions include:

1. If the manure will be staged for more than 72 hours, the pile must be covered or adequately bermed to prevent run-on or run-off.
2. The staged manure must be land applied within 90 days.
3. The manure pile must be setback at least 100 feet from roads and property lines.
4. The manure pile must be setback at least 400 feet from any residence.
5. The manure pile must be setback a least 300 feet from any well, surface water or drainage tile inlet unless there is a barrier or surface gradient that directs runoff from the staged manure away from waters of the state or tile inlet or well.
6. Manure must not be staged on slopes greater than 6% unless run-on and runoff are controlled.
7. Manure must not be staged where water stands in a field or in any waterway.
8. Manure can only be staged in a floodplain for 72 hours.

Solid manure, including litter and used bedding, may not be stored outside of a manure storage structure for more than 24 hours or during any inclement weather that could cause uncontrolled runoff.

The land application of manure is prohibited from a public road as well as when the ground is saturated.

Manure must not be applied to highly erodible ground unless the field has either 40% residue protection or crop cover, or the manure is applied in accordance with a Conservation Plan.

Will CFOs and CAFOs be allowed to surface apply manure to frozen or snow-covered ground? (See 327 IAC 19-14-4)

It is the intent of the rule to discourage the practice of surface applying manure to frozen or snow-covered ground as such an activity presents a higher risk of contaminated runoff during melting or storm conditions. Injection, or same day incorporation, of manure into the soil is not considered surface application. Each farm is encouraged to manage their manure storage capacity in a manner that prevents the need for removal of manure during the winter months. The CFO rule provides for circumstances that necessitate surface application of manure on frozen or snow-covered ground. Refer to the “Manure Application to Frozen or Snow-Covered Ground” section for additional information.

How is a manure/process waste water spray irrigation system monitored for leakage? (See 327 IAC 19-14-5)

When manure or waste water are spray irrigated, it must be conducted either under the constant supervision of a person, or the irrigation system must be equipped with a device to shut down if a leak is detected through pressure loss or if the system fails to maintain a reasonably uniform application rate.

Any land used for spray irrigation must have no less than 20 inches of soil over bedrock.

Spray irrigation of manure or wastewater in a floodplain is not recommended. If it is conducted however, it must meet the following:

1. The setback from surface waters increased to 200 feet.
2. The spraying is conducted during times of low potential for flooding. This must be based on the NRCS soil data.
3. There is no expectation of flooding based on available weather forecasts and upstream conditions.
4. A spray irrigation plan is prepared and maintained in the operating record containing a map of the irrigation area, a timeline when irrigation occurs and if the system is supervised manually or with a sensing device.

How are manure application setbacks measured? (See 327 IAC 19-14-6)

All setbacks must be measured from the edge of the area of actual placement of the manure onto the field to the known feature listed below.

Can setbacks be waived or reduced?

Property line setbacks may be waived in writing by the adjoining property owner. The waiver must be kept in the record book.

Some setback distances can be reduced if certain design or management processes are implemented. A properly designed and maintained filter strip of at least 50 feet can provide the required setback between the application site and:

1. Surface water
2. Any known well
3. The surface opening of a sinkhole
4. A drainage tile inlet

Land Application setbacks for manure and waste water land application are based on those within Table 3 of the Indiana NRCS Conservation Practice Standard # 633: Waste Utilization, October 2007. See chart below.

Known Feature	Liquid Injection	Single Pass Incorporation (liquid or solid)	Liquid Incorporation (within 24 hrs.)	Surface Application To Pasture	Surface Application (solid or compost)	Liquid Surface <or = to 6% slope or residue cover	Liquid Surface > 6% Slope
Public water supply wells & public water supply surface intake structure	500	500	500	500	500	500	500
Surface water	25	25	50	50	50	100	200
Sinkholes	25	25	50	50	50	100	200
Wells	50	50	50	50	50	100	200
Drainage inlets	5	5	50	50	50	100	200
Property lines & public roads	0	0	10	10	10	50	50

Setback Distances are listed in feet.

<u>What other restrictions apply to land application events?</u>
(See 327 IAC 19-14-4(b, c & d))

When planning to land apply manure or wastewater, the CFO must take into account the weather forecast 24 hours before and after the planned land application and the site soil conditions to assure that manure will not be applied at a time when runoff would likely result.

The CFO owner/operator must inspect land application sites before land application to determine if soil conditions are right and to identify field tile outlets within or bordering the land application sites and surface water drainage ways exiting the site for monitoring.

The owner/operator must monitor any drainage conduits during and immediately following the land application. Monitoring should include observing color, flow, volume change and odor, If there is evidence of a manure discharge the application activity must cease and efforts made to stop the flow and either land apply or return the captured manure to storage.

These monitoring activities must be documented in the farm operating record.

Marketing and Distributing Manure

CFOs may market and distribute manure instead of land applying it. This section describes the requirements that apply to marketing and distributing manure. It also describes how a CFO may use marketing and distribution records to obtain a minimum acreage waiver to substitute for access to some or all of the acreage the CFO would need to land apply the manure it generates.

Are CFOs/CAFOs allowed to market and distribute manure to others?
(See 327 IAC 19-14-7)

Yes. The following requirements apply if more than 10 cubic yards or 4,000 gallons of manure are given or sold by the owner/operator to a single individual.

1. The owner/operator must provide an information sheet to the person who receives the manure that includes:

    a. The name and address of the CFO.
    b. A statement indicating that it is unlawful to allow the manure to enter the state's waters.
    c. Nutrient content information for the manure.
    d. Manure application requirements in the rule.

    Refer to the Marketing or Distribution of Manure Information Sheet of the CFO Record Book for a sample that may be used to satisfy this requirement. It is also available at: http://www.in.gov/idem/files/form_cfo_manure_marketing.doc .

2. The owner/operator must retain information that includes the name and address of the person receiving the manure, the amount of manure distributed to that person, and a copy of the information sheet. This information must be available for review during an inspection of the operating record.

How do I obtain a minimum acreage waiver for my manure marketing program?

Marketing and distributing is an acceptable manure management practice. Both new and existing operations are eligible to request an acreage waiver for marketing and distribution of manure. IDEM will allow for credits of up to 100% of manure generated to be given away or marketed for operations with 3 years of distribution records. New and existing operations can provide proof of having contracts for any percentage, up to 100%, of the projected amount of manure produced at the facility.

All existing approved CFOs that are distributing manure must generate the documentation mentioned below and maintain it in their operating record. This allows your IDEM inspector to review the records and verify eligibility for a minimum acreage waiver for part or all of the manure generated at the farm.

If an application is submitted to IDEM for approval to construct a new farm or expansion of an existing farm, and the applicant is currently distributing manure or plans to (for new farms), the application form allows for the applicant to disclose that and solicits the required documentation noted below.

What documentation must I provide?

The documentation must:

A. Be from the previous three years for the facility.

B. Include the following details which are captured on the IDEM provided Marketing and Distribution of Manure Information Sheet.
   1. The name(s) of each party who received manure.
   2. The date(s) manure transferred to each party.
   3. The amount(s) of manure transferred to each party.
   4. Information regarding manure nutrient values.
   5. The list of land application restrictions that was provided to each party receiving manure.

C. Copies of individual completed Marketing and Distribution of Manure Information Sheets, or an overall facility synopsis may be submitted. Attach any and all sheets to Marketing and Distribution of Manure form in the CFO Application Packet (State Form #55051).

D. Include contracts for the entire approval term for marketing the projected amount of manure produced at the facility. Any percentage of the manure can be marketed and will dictate how much land, if any, is necessary for the producer to maintain access to for manure land application. The producer must inform IDEM of the projected amount of manure that will be produced annually and that manure will be provided to another person who will control the land application of the manure or further marketing and distribution. At a minimum, the contract must specify the following information:
   1. The name of the producer.
   2. The name of the recipient.
   3. The term must be for a least 5 years.
   4. The amount of manure to be taken by the recipient.
   5. A statement regarding intent to comply with rules of the Office of Indiana State Chemist pertaining to Manure Marketing and Land Application. (355 IAC 7, CERTIFICATION FOR DISTRIBUTORS AND USERS OF FERTILIZER MATERIAL, and 355 IAC 8, FERTILIZER MATERIAL USE, DISTRIBUTION, AND RECORD KEEPING).

What rules must be followed by people who obtain and land apply 10 or more cubic yards or 4,000 gallons/year or more of manure from a CFO? (See 355 IAC 7 and 355 IAC 8)

The manure must be applied in compliance with Office of the Indiana State Chemist rule 355 IAC 8, titled Fertilizer Material Use, Distribution, and Record Keeping.

If the CFO land applies manure for a person who obtained manure from a CFO, what rules must be followed by the CFO? (See 355 IAC 7 and 355 IAC 8)

The manure must be applied in accordance with Office of the Indiana State Chemist rule 355 IAC 8 titled Fertilizer Material Use, Distribution, and Record Keeping.

What is an example calculation for determining required land application acreage to be submitted with the Plot Maps attachment?

Using the conversions for manure and acreage requirements from the Manure Application Land Based Estimates Table in the "Land Application of Manure" section of the CFO Guidance Manual, a CFO with 30,000 broilers would need 41.7 acres (30,000 chickens/720 chickens per acre) of land available for manure application. The chickens would produce 38,325 cu.ft./yr. of manure (30,000(0.0035/day x 365 days)) according to Table 1 in the "Design and Construction Requirements" section of the CFO Guidance Manual.

Example 1: If 100% of the manure generated is distributed, you are not required to provide soil survey maps to show that land application acreage is available for manure spreading.

Example 2: If 60% of the manure generated is distributed, you must provide soil survey maps to show at least 40% of the required land application acreage for your operation is available for manure spreading. In this example, 40% of 41.7 acres is 16.7 acres (41.7 x .40 = 16.7).

Manure Application Rates

Manure contains the major plant nutrients nitrogen and phosphorus. The CFO Rule limits land application of manure based on either the nitrogen or phosphate needs of planned crops. Soil phosphorus levels determine whether a field is eligible for land application, and if so, which limits apply.

The CFO Rule regulates nitrogen and phosphorus differently based on their behavior in the environment. Nitrogen is unstable and may volatilize from the soil or leach into surface and ground water if applied in excess of what the next crop will use. Because nitrogen generally will not stay in the soil for multiple growing seasons, the nitrogen needs of the next planned crop define the upper limit on application rates.

Phosphorus is stable and binds tightly to soil particles. It accumulates in soils and is available for multiple growing seasons. Phosphorus is lost primarily through soil erosion. For fields that need phosphorus, the CFO Rule allows an application of multiple year's worth of phosphate to build or maintain soil phosphorus levels as long as the nitrogen limit is not exceeded and the application does not exceed the phosphorus limits.

This section describes how to determine what limits apply to each field and provides example manure application rate calculations. It also explains how phosphorus limits apply – including how to plan for and document multi-year phosphorus applications.

Note: *Measurements of phosphorus levels in the soil are measured as soil P concentrations. Measurements of phosphorus in manure analyses are reported as P_2O_5 (phosphate). Phosphorus fertilizer recommendations are also based on P_2O_5. The text and tables in the CFO rule use P generically whether referring to P concentrations in soil, P_2O_5 concentrations in manure, or P_2O_5 fertilizer recommendations. This guidance uses P_2O_5 where appropriate to clarify the intent of the CFO rule.*

How do you determine whether a field is limited to a nitrogen or phosphorus-based manure application rate? (See 327 IAC 19-14-3)

A field's soil phosphorus concentration determines whether it is eligible for land application, and if so, whether it is limited to a nitrogen or a phosphorus-based application rate. Table 1 and Table 2 in 327 IAC 19-14-3 define the limits depending on the size of the farm and when it was approved for construction:

Table 1 applies to large CAFOs approved for initial construction after February 13, 2003, CAFOs with an NPDES permit, and CFOs approved for initial construction after July 1, 2012.

Table 1.

Bray P1 /Melich 3 Soil P Test Level (ppm)	Manure Application Rate
0-50	N based
51-100	1.5 × P_2O_5 crop removal
101-200	1× P_2O_5 crop removal
201+	0

Table 2 applies to CAFOs approved for initial construction on or before February 13, 2003, and CFOs approved for initial construction on or before July 1, 2012. Table 2 provides a transition period for these farms to phase in the new phosphorus limits. Beginning in 2018, Table 1 and Table 2 are the same.

Table 2.				
	Manure Application Rate			
Bray P1 /Melich 3 Soil P test level (ppm)	YEAR [1]			
	2012-2013	2014-2015	2016-2017	2018+
0-50	N based	N based	N based	N based
51-100	1.5 × P_20_5 crop removal	1.5 × P_20_5 crop removal	1.5 × P_20_5 crop removal	1.5 × P_20_5 crop removal
101-200	1.0 × P_20_5 crop removal	1.0 × P_20_5 crop removal	1.0 × P_20_5 crop removal	1.0 × P_20_5 crop removal
201-250	0.9 × P_20_5 crop removal	0.75 × P_20_5 crop removal	0.75 × P_20_5 crop removal	0
251-275	0.9 × P_20_5 crop removal	0.75 × P_20_5 crop removal	0.5 × P_20_5 crop removal	0
276-300	0.9 × P_20_5 crop removal	0.75 × P_20_5 crop removal	0.25 × P_20_5 crop removal	0
301-350	0.7 × P_20_5 crop removal	0.5 × P_20_5 crop removal	0	0
351-400	0.7 × P_20_5 crop removal	0.25 × P_20_5 crop removal	0	0
401+	0	0	0	0

[1] Multiple years of phosphorus may be applied as long as the net average of phosphorus does not exceed the amounts indicated above in Table 2

How often do I have to sample soil in a particular field to determine the land application limits that apply to it? (See 327 IAC 19-7-5(c))

When calculating an application rate for a particular field, the soil test you use must be no more than 4 years old at the time you apply manure to that field. If you choose to test a field more frequently, you should use the most recent analysis.

How often do I have to sample manure to determine its nutrient content for application rate calculations? (See 327 IAC 19-7-5(d))

The manure test you use must be no more than 1 year old at the time you apply the manure.

For more information on soil and manure sampling see the "Manure Management Plan" section of this guidance.

What is the maximum application rate allowed? (See 327 IAC 19-14-3)

The maximum application rate is the nitrogen-based rate for the next crop you plan to grow. If a phosphorus limit applies, you may apply at the phosphorus limit for each crop or use up to a nitrogen-based rate to apply multiple year's worth of phosphate as long as the total amount applied over an averaged period does not exceed the amount of phosphate allowed under Table 1 or Table 2.

What is a multi-year phosphorus application?

The CFO Rule allows applications of more phosphate than a single crop will use as long as a single application does not exceed the nitrogen limit, and the total amount of phosphate applied over an averaged period does not exceed the limit allowed under Table 1 or Table 2. This is called multi-year phosphorus application.

Nitrogen-Based Manure Application Rates

How do you use nitrogen as a limiting factor to calculate manure application rates? (See 327 IAC 19-14-3(b))

When soil phosporus levels do not limit manure applications rates based on phosphorus, the maximum rate may be based on the manure's nitrogen content and the nitrogen recommendation for the next crop to be grown. The nitrogen recommendation is based on the Plant Available Nitrogen (PAN) which takes into account potential nitrogen losses due to volitization and any N credits from previous crops or manure or commercial fertilizer applications. Purdue Extension Publication AY-277 describes the process of determining the PAN.

References for crop nitrogen recommendations include the Tri State Fertilizer Recommendations Extension Bulletin E-2567 and the Purdue Extension Publication ID-179 (Corn and Soybean Field Guide). The ID-179 publication contains information on a wide range of topics and is updated annually, which justifies it being a preferred reference document. IDEM does not require submittal of an alternate compliance approach to use the nitrogen rate recommendations from ID-179.

What affects nitrogen availability?

Much of the manure's nitrogen is in the form of ammonium (NH_4^+), which can be volatile. Incorporating manure into the ground helps minimize volatilization. Soil injection of liquid manure or incorporating surface-applied manure into the ground within a few hours after application minimizes nitrogen losses.

Can application rates be adjusted to account for nitrogen loss?

Yes, you can account for nitrogen loss through volatilization when calculating manure application rates.

How do you calculate an application rate based on nitrogen?

Using a field's yield potential to estimate how much nitrogen your crop will need and your manure analysis results to estimate how much nitrogen the manure will provide, you can calculate a nitrogen-based application rate for each field. Your calculation can include nitrogen credits and losses. An example calculation follows on the next page.

Example #1 – Nitrogen-based application rate for one crop (liquid manure):

A northern Indiana CFO plans to inject liquid swine manure in March for a corn crop. The field has a corn crop yield potential of 175 bu/A. The field produced soybeans last year. The CFO plans to use commercial row starter at 8 lbs N/acre and side dress at 50 lbs N/acre. The nitrogen analysis from the most recent manure test was 35.2 lbs of ammonium and 15.0 lbs organic N per 1000 gallons. The phosphorus analysis from the most recent soil test was 45 parts per million. This example calculates the application rate for this field.

Step 1: Using the soil P concentration result from a soil analysis that is no more than 4 years old on the date of land application, refer to Table 1 in 327 IAC 19-14-3(d) to determine whether the field is limited to a phosphorus-based application rate. In Table 1, a soil P concentration of 45 ppm is eligible for a nitrogen-based application rate.

Step 2: Use the Tri State Fertilizer Recommendations Extension Bulletin No. E-2567 to estimate the crop nitrogen fertilizer recommendation to achieve the yield potential of 175 bu/A. This bulletin provides two equations for estimating a crop nitrogen fertilizer recommendation. They are:

Fertilizer N recommendation in lbs N/acre =

-27 + (1.36 × yield potential) − N credits

or

110 + (1.36 × (yield potential − 100)) − N credits

Using the first equation for this example, insert 175 bu/A as the yield potential. The N credit of 30 from the soybean crop last year comes from the same Extension Publication No. E-2567 (AY-277). The row starter and side dress provide a fertilizer N credit of 58. Here is the calculation:

$$-27 + (1.36 \times 175\ \text{bu./A}) - 30_{(\text{soybean credit})} - 58_{(\text{fertilizer credit})} = 123\ \text{lbs N/acre}$$

Step 3: Use the Purdue Extension Publication AY-277 for recommended organic N mineralization rates to calculate the Plant Available Nitrogen (PAN):

Ammonium − (Ammonium x (loss percentage)) + (organic N × 0.35) = PAN

Insert your manure analysis results for ammonium and organic N. Purdue Extension Publication ID-179 estimates a 5% N loss for liquid manure injected during March in northern IN. Insert 0.05 (5%) for the loss percentage. Here is the calculation:

$$35.2 - (35.2 \times 0.05) + (15 \times 0.35) = 39\ \text{lbs PAN/1000 gallons}$$

Step 4: Use the fertilizer N recommendation from Step 2 and the PAN value from Step 3 to calculate the application rate in gallons per acre:

(Fertilizer N recommended ÷ PAN) × 1000 gal = Application rate in gals/A

$$(123 \div 39) \times 1000\ \text{gal} = 3{,}154\ \text{gals/A}$$

Note: 327 IAC 19-14-3(b) states that you must use minimum nitrogen loss estimates unless you justify an alternate value. This example uses the alternate loss value of 5% from the ID-179 publication. This publication is updated regularly and is recommended for potential loss estimates.

Example #2 – Nitrogen-based application rate for one crop (solid manure):

A southern Indiana CFO plans to surface apply chicken manure during March to a field to be planted in corn. The manure was not incorporated upon application. The field has a corn crop yield potential of 190 bu/A. The field produced soybeans last year. The CFO plans to use commercial row starter at 10 lbs N/acre and side-dress at 30 lbs N/acre. The nitrogen analysis from the most recent manure test was 13 lbs of ammonium and 59.0 lbs organic N per wet ton. The phosphorus analysis from the most recent soil test was 38 parts per million. This example calculates the application rate for this field.

Step 1: Using the soil P concentration result from a soil analysis that is no more than 4 years old on the date of land application, refer to Table 1 in 327 IAC 19-14-3(d) to determine whether the field is limited to a phosphorus-based application rate. In Table 1, a soil P concentration of 38 ppm is eligible for a nitrogen-based application rate.

Step 2: Use the Tri State Fertilizer Recommendations Extension Bulletin No. E-2567 to estimate the crop nitrogen fertilizer recommendation to achieve the yield potential of 190 bu/A. This bulletin provides two equations for estimating a crop nitrogen fertilizer recommendation. They are:

Fertilizer N recommendation in lbs N/acre =

-27 + (1.36 × yield potential) − N credits

or

110 + (1.36 × (yield potential − 100)) − N credits

Using the first equation for this example, insert 190 bu/A as the yield potential. The N credit of 30 from the soybean crop last year comes from the same Extension Publication No. E-2567 (AY-277). The row starter and side dress provide a fertilizer N credit of 40. Here is the calculation:

$$-27 + (1.36 \times 190\ \text{bu./A}) - 30_{(\text{soybean credit})} - 40_{(\text{fertilizer credit})} = 161\ \text{lbs N/acre}$$

Step 3: Use the Purdue Extension Publication AY-277 for recommended organic N mineralization rates to calculate the Plant Available Nitrogen (PAN):

Ammonium − (Ammonium x (loss percentage)) + (organic N × 0.35) = PAN

Insert your manure analysis results for ammonium and organic N. Purdue Extension Publication ID-179 estimates a 15% N loss for solid manure surface applied during March in southern IN. Insert 0.15 (15%) for the loss percentage. Here is the calculation:

$$13 - (13 \times 0.15) + (59 \times 0.60) = 46\ \text{lbs PAN / ton}$$

Step 4: Use the fertilizer N recommendation from Step 2 and the PAN value from Step 3 to calculate the application rate in tons per acre:

(Fertilizer N recommended ÷ PAN) × 1 ton = Application rate in tons/A

(161 ÷ 46) × 1 ton = 3.5 tons /A

Note: 327 IAC 19-14-3(b) states that you must use minimum nitrogen loss estimates unless you justify an alternate value. This example uses the alternate loss value of 15% from the ID-179 publication. This publication is updated regularly and is recommended for potential loss estimates.

Phosphorus-Based Manure Application Rates

How do you use phosphorus as a limiting factor to calculate manure application rates? (See 327 IAC 19-14-3(d) and (e))

You use the phosphorus level in the soil, the crop's phosphate (P_2O_5) fertilizer recommendation and the amount of phosphate in the manure when determining application rates. Tables 1 and 2 in the CFO rule establish phosphorus-based limits.

Table 1 originated in the USDA NRCS Conservation Practice Standard # 590 titled Nutrient Management. It applies to both commercial fertilizer and organic nutrient sources and is meant to address longer-term phosphorus loadings to the soil. The 590 standard says, *"A single application of organic nutrients may be made at a rate equal to but not in excess of the crop nitrogen needs for that year, as long as the soil test phosphorus is ≤ 200 ppm. The longer term P based application rates can then be managed by selecting an appropriate frequency of manure application."*

Consistent with this NRCS standard, in fields that are limited to phosphorus-based rates, you can apply at a one-year phosphorus rate, or a multi-year phosphorus rate to manage phosphorus loadings to the field. Examples of one-year and multi-year phosphorus applications are provided below.

References for a crop's phosphate demands include the Tri State Fertilizer Recommendations Extension Bulletin No. E-2567 and the Purdue Extension Publication ID-179.

The Tri State Fertilizer Recommendations Bulletin No. E-2567 reports a corn P_2O_5 removal rate of 0.37 lbs P_2O_5 per bushel and 0.8 lbs. P_2O_5 removed per bushel of soybeans.

How do you calculate an application rate based on soil phosphorus levels?

You can calculate a phosphorus-based application rate by using a field's yield potential to estimate how much phosphate your crop(s) will remove, your manure analysis to estimate how much phosphate the manure will provide, and the phosphorus application rate tables from the CFO rule to determine how much phosphate is allowed. Your calculations can project phosphorus needs for single crop years or multiple crop rotation patterns for phosphorus management. When applying multiple year's worth of phosphorus you need to calculate the nitrogen rate using the process shown in Example #1 to be sure you don't exceed a nitrogen-based rate with any one application. Example calculations for one-year and multi-year scenarios follow on the next few pages:

Example #1 – Phosphorus-based application rate for one year (one crop):

A CFO plans to apply manure to a field every year. It is a new CFO approved for construction after July 1, 2012, so the limits in Table 1 apply (See 327 IAC 19-14-3). The field's yield potential for this year's corn crop is 165 bu/A. The phosphorus analysis result from the most recent soil test was 60 ppm. The last annual manure analysis result showed 25 lbs P_2O_5/1,000 gallons. The calculated plant available nitrogen (PAN) is 21 lbs/ 1,000 gallons of manure.

Step 1: Using the soil P concentration result from a soil analysis that is no more than 4 years old on the date of land application, refer to Table 1 to determine whether the field is limited to a phosphorus-based application rate. In Table 1, a field with a soil P concentration of 60 ppm is limited to an application rate of 1.5 × P_2O_5 crop removal.

Step 2: Use the Tri State Fertilizer Recommendations Extension Bulletin No. E-2567 P_2O_5 removal rate of 0.37 lbs P_2O_5 per bushel to estimate the phosphate crop removal for a yield potential of 165 bu/A:

Yield potential × Corn crop P_2O_5 removal = P_2O_5 */A removed*

165 × 0.37 = 61 lbs P_2O_5 */A removed*

Step 3: Table 1 allows an application rate of 1.5 × P_2O_5 crop removal so multiply the P_2O_5 /A removed value calculated in Step 2 by 1.5 to calculate how much P_2O_5 is allowed for each acre.

1.5 × 61 = 92 lbs P_2O_5/A allowed

Step 4: Use the fertilizer P_2O_5/A allowed value from Step 3 and the manure phosphate analysis result of 25 lbs P_2O_5 /1,000 gallons to calculate the application rate in gallons per acre:

P_2O_5/A allowed ÷ Manure P_2O_5 × 1,000 gal = Application rate in gals/A

92 ÷ 25 × 1,000 = 3,680 gal/A

Step 5: To make sure you will not exceed the nitrogen-based rate, use the process in Nitrogen-based Example #1 to calculate the nitrogen-based rate for this corn crop. Using that process, including a soybean credit and a crop yield potential of 165 bu/A, this field will need 167 lbs of N/A. There are 28 lbs of plant available nitrogen per 1,000 gallons of manure. Divide 167 by 28 and multiply by 1,000 to calculate the nitrogen-based application rate:

167 ÷ 28 × 1,000 = 5,964 gal/A

Step 6: Select the lower of the application rates calculated in Steps 4 and 5. In this case, the nitrogen rate is higher and would provide more phosphate than allowed under Table 1 so you will use the phosphorus rate calculated in Step 4.

Example #2 – Multi-year phosphorus application rate limited by Table 1:

A CFO plans to apply two years of phosphorus to a field for a corn/soybean rotation. It is a new CFO approved for construction after July 1, 2012 so it must use Table 1 (See 327 IAC 19-14-3). The field's yield potential for the corn crop in year one is 185 bu/A. The yield potential for the soybean crop in year two is 55 bu/A. The latest soil test result for the field, taken within the last four years, show soil P concentrations of 110 ppm. The last annual manure analysis result showed 27 lbs P_2O_5/1,000 gallons. The calculated plant available nitrogen (PAN) is 28 lbs/1,000 gallons of manure.

Step 1: Using the soil P concentration result from a soil analysis that is no more than 4 years old on the date of land application, refer to Table 1 to determine what limits apply to application rates for this field. In Table 1, a field with a soil P concentration of 110 ppm is limited to an application rate of 1.0 × P_2O_5 crop removal.

Step 2: Use the Tri State Fertilizer Recommendations Extension Bulletin No. E-2567 P_2O_5 removal rate of 0.37 lbs P_2O_5 per bushel of corn and 0.80 lbs P_2O_5 per bushel of soybeans to estimate the corn and soybean crop phosphate removal for yield potentials of 185 bu/A and 55 bu/A respectively:

Yield potential × crop P_2O_5 removal = P_2O_5/A removed

Corn: 185 × 0.37 = 68.45 lbs P_2O_5/A removed (round down to 68)

Soybeans: 55 × 0.80 = 44 lbs P_2O_5/A removed

The two year crop rotation total P_2O_5 removal is: **68 + 44 = 112 lbs P_2O_5/A**

Step 3: Since Table 1 allows an application rate of 1.0 × P_2O_5 crop removal in fields having from 101 to 200 ppm phosphorus, the 112 lbs P_2O_5/A calculated in Step 2 is the total amount of phosphate allowed for this field for the corn and soybean crops in this multi-year application.

Step 4: Use the fertilizer P_2O_5/A allowed value from Step 3 and the manure phosphate analysis result of 27 lbs P_2O_5 /1,000 gallons to calculate the phosphorus-based application rate in gallons per acre:

P_2O_5/A allowed ÷ Manure P_2O_5 × 1,000 gal = Application rate in gals/A

112 ÷ 27 × 1,000 = 4,148 gal/A

Step 5: To make sure you will not exceed the nitrogen-based rate for the next crop to be grown, use the process in Nitrogen-based Example #1 to calculate the nitrogen-based rate for the corn crop in year one. Using that process, including a soybean credit and yield potential of 185 bu/A, this field will need 195 lbs of N/A. We calculated 28 lbs of plant available nitrogen per 1,000 gallons of manure. Divide 195 by 28 and multiply by 1,000 to calculate the nitrogen-based application rate:

195 ÷ 28 × 1,000 = 6,964 gal/A

Step 6: Select the lower of the application rates calculated in Steps 4 and 5. In this case, the nitrogen rate is higher and would provide more phosphate than allowed under Table 1 for the planned corn and soybean crops so you will use the multi-year phosphorus rate calculated in Step 4. You will not apply manure before the soybean crop in year two.

Example #3 – Multi-year phosphorus application rate limited by Table 2:

A CFO in southern Indiana plans to apply two years of phosphorus to a field for a corn/soybean rotation in 2014 and 2015. The farm wants to make sure the field is eligible for another application ahead of the corn crop planned for 2016. It was approved for construction before July 1, 2012 so it can use Table 2 (See 327 IAC 19-14-3). Table 2 phases in phosphorus limits to allow older CFOs to adjust manure applications on land with elevated soil phosphorus concentrations. The farm is using the following information in their calculations:

- Liquid manure will be injected in March. Purdue Extension Publication ID-179 estimates a 10% N loss for liquid manure injected in March in southern Indiana.
- The field's corn yield potential is 180 bushels per acre.
- The field's soybean yield potential is 55 bushels per acre.
- The 2014 soil test result for this field showed soil P concentrations of 210 ppm. (Beginning in 2018, this field would not be eligible for application until a soil test shows soil P concentrations below 201 ppm.)
- The 2014 manure analysis result showed 25 lbs P_2O_5/1,000 gallons of manure.
- The calculated plant available nitrogen (PAN) is 37lbs/ 1,000 gallons of manure.

Step 1: Using the soil P concentration result from a soil analysis that is no more than 4 years old on the date of land application, refer to Table 2 to determine what limits apply to application rates for this field. In Table 2, a soil P concentration of 210 ppm is limited to an application rate of 0.75 × P_2O_5 crop removal for the years 2014 and 2015.

Step 2: Use the Tri State Fertilizer Recommendations Extension Bulletin No. E-2567 P_2O_5 removal rate of 0.37 lbs P_2O_5 per bushel of corn and 0.80 lbs P_2O_5 per bushel of soybeans to estimate the corn and soybean crop phosphate removal for yield potentials of 180 bu/A and 55 bu/A respectively:

Yield goal × crop P_2O_5 removal = P_2O_5/A removed

2014 Corn: 180 × 0.37 = 66.6 lbs P_2O_5/A removed (round up to 67)

2015 Soybeans: 55 × 0.80 = 44 lbs P_2O_5/A removed

The two year crop rotation total P_2O_5 removal is: **67 + 44 = 111 lbs P_2O_5/A**

Step 3: Since Table 2 limits fields having from 201 to 250 ppm phosphorus to an

application rate of 0.75 × P_2O_5 crop removal in 2014 and 2015, multiply the P_2O_5 /A removed value calculated in Step 2 by 0.75 to calculate how much P_2O_5 is allowed for each acre:

111 × 0.75 = 83.25 lbs P_2O_5/A allowed (round down to 83)

Step 4: Use the fertilizer P_2O_5/A allowed value from Step 3 and the manure phosphate analysis result of 25 lbs P_2O_5 /1,000 gallons to calculate the phosphorus-based application rate in gallons per acre:

P_2O_5/A allowed ÷ Manure P_2O_5 × 1,000 gal = Application rate in gals/A

83 ÷ 25 × 1,000 = 3,320 gal/A

Step 5: To make sure you will not exceed the nitrogen-based rate for the next crop to be grown, use the process in Nitrogen-based Example #1 to calculate the nitrogen-based rate for the corn crop in 2014. Using that process, including a soybean credit and a yield potential of 180 bu/A, this field will need 188 lbs of N/A. We calculated 37 lbs of plant available nitrogen per 1,000 gallons of manure. Divide 188 by 37 and multiply by 1,000 to calculate the nitrogen-based application rate:

188 ÷ 37 × 1,000 = 5,081 gal/A

Step 6: Select the lower of the application rates calculated in Steps 4 and 5. In this case, the nitrogen rate is higher and would provide more phosphate than allowed under Table 2 for the planned corn and soybean crops so you will use the multi-year phosphorus rate calculated in Step 4. You will not apply manure before the soybean crop in 2015.

Additional guidelines for multi-year applications

Carrying Example #3 forward, the CFO could apply the same process to calculate rates for another corn/soybean rotation in 2016 and 2017. The 2014 soil test would still be usable. In the new calculations the CFO would use the latest annual manure analysis, and adjust the phosphate limits up or down if actual yields were substantially better or worse than expected.

If the actual yields in 2014 and 2015 were substantially better than the yield potential used in your calculations, you can recalculate the 2014/2015 phosphate limit in Step 2 and add the difference into the phosphate limit calculated in Step 2 for the 2016/2017 crop rotation. This adjustment is optional. It gives you credit for additional phosphorus removed by bumper crops and allows a higher rate for the next application.

If the actual yields in 2014 and 2015 were substantially under the yield potential used in your calculations, recalculate the 2014/2015 phosphate limit in Step 2 and subtract the difference from the phosphate limit calculated in Step 2 for the 2016/2017 crop rotation. This adjustment keeps you within the application limits and allows you to avoid having to stay completely off fields when yields are down.

You do not have to account for the actual yields of the 2016 and 2017 crops when calculating rates for the 2018 application because a new soil test is due and it will show you where phosphorus levels are in the field and what limits apply.

Other common questions:

How do new soil test results affect long term multi-year nutrient management decisions?

Each new soil analyses will determine what application limits apply to a field. The results are good for up to 4 years. Application rate calculations must be based on a manure analysis that is no more than one year old at the time of application, so you should calculate the application rate for each application whether single year or multi-year.

Do existing CFOs have to test the manure before it is land applied?

IDEM expects the manure to be applied at rates based on either a past analysis less than one year old of the same kind of manure being applied, or an analysis of the actual manure being land applied. Obtaining representative samples from liquid manure before it is removed from storage is not practical. On some farms that handle dry manure, representative samples can be collected while manure is in storage and testing can be done prior to land application. Otherwise it is important to use the most recent manure analysis obtained within the last year. New farms that have not conducted a manure analysis may reference the values in the NRCS Agricultural Waste Management Field Handbook (AWMFH) Chapter 4, March 2008, available from the Natural Resources Conservation Service, West National Technology Support Center, 1201 NE Lloyd Boulevard, Suite 1000, Portland, OR 97232 or online at http://directives.sc.egov.usda.gov/viewerFS.aspx?hid=21430 and applied at 50% of the nitrogen application rate.

Do land application records reflect what I applied based on the new manure tests results or the old test that I based my rates on?

327 IAC 19-14-3(f)(8) requires records of the amount of nitrogen and phosphorus actually applied to each field including documentation of calculations for the total amount applied. Records should reflect the applied amounts of N and P based on the most recent test results. IDEM recognizes that in some cases a new test may have higher nutrient content than the old test used to calculate the application rate making it appear that the operation applied too much N or P. IDEM would not cite a violation in that case as long as the application did not exceed the rate calculated using the old test. The new test results may assist the operation in making good management decisions about how much commercial fertilizer they want to use for the next crop.

What additional reference material is available to assist in calculating manure application rates?

The Purdue University Extension Publication AY-277-W, titled Calculating Manure and Manure Nutrient Application Rates is available from Purdue Extension Service offices and their on-line publications website.

Do I have to account for commercial nitrogen and phosphorus fertilizer sources in my manure application rate calculations and land application records?

Yes. All sources of nutrients must be taken into account when calculating manure application rates. The Office of the Indiana State Chemist (OISC) now requires people who apply ≥10 cubic yards or ≥4,000 gallons of fertilizer material in a calendar year to

develop a fertilizer application plan for the fields where they apply fertilizer. The plan must provide for agronomic rates considering all sources of fertilizer. Manure is considered an organic fertilizer. Example #1 (above) shows how nitrogen credits for a previous soybean crop, row starter, and sidedress nitrogen factor into the rate calculation. The same principle applies to phosphate fertilizer sources when calculating phosphorus-based application rates.

Manure Application to Frozen or Snow-Covered Ground

The intent of the CFO regulations, 327 IAC 19, is to discourage the practice of surface applying manure to frozen or snow-covered ground as such an activity presents a higher risk of contaminated runoff during melting or storm conditions. Injection, or same day incorporation, of manure into the soil is not considered surface application. Each farm is encouraged to manage their manure storage capacity in a manner that prevents the need for removal of manure during the winter months. IDEM recognizes that circumstances may still exist that necessitate the surface application of manure on frozen or snow-covered ground.

I am a CFO with less than 120 days of storage capacity. Can I surface apply manure to frozen or snow-covered ground? (See 327 IAC 19-14-4(i))

A CFO with 120 days or less of designed manure storage capacity may request approval from the Commissioner to apply manure to frozen or snow-covered ground. The request must be approved before the application begins. The request for such an authorization must contain an assessment of the total manure storage capacity available. If land application under these conditions causes a water quality violation, the authorization is terminated. Filling out the form "**Confined Feeding Operation Request for Approval to Surface Apply Manure to Frozen or Snow-Covered Ground**" (State Form 55162) completely should provide all the information needed to review your request.

Land application to frozen or snow-covered ground that occurs under the situation described above must be done in compliance with all land application requirements of 327 IAC 19-14 and the following requirements:

1. Application only on land that has 2% or less slope or has at least 40% residue protection or crop cover.
2. No application in a flood plain.
3. The setback to surface waters must be at least 200 feet.
4. The rate must not exceed 50% of the appropriate agronomic rate.

I operate a CFO that is not CAFO-sized with more than 120 days of storage capacity. Can I surface apply manure to frozen or snow-covered ground? (See 327 IAC 19-14-4)

For CFOs with greater than 120 days of storage but less than 180 days, you may propose an Alternate Design or Compliance Approach under the provisions of 327 IAC 19-5-1 to allow land application to frozen or snow-covered ground in a limited storage capacity situation through a CFO approval amendment. Submit an approval application form following the instructions for an amendment. An approval amendment is an Agency decision that must include a decision notice by IDEM to adjoining property owners and the county commissioners.

All approval amendments authorizing the surface application of manure to frozen or snow-covered ground will include a requirement for the farm to send land application reports to IDEM detailing the activity.

I am a CAFO-sized CFO. Can I surface apply manure to frozen or snow-covered ground? (See 327 IAC 19-14-4(e))

CAFOs are not eligible for approval under 327 IAC 19-14-4(i), which is limited to small CFOs with 120 days or less storage, or through an alternate compliance approach under 327 IAC 19-5-1 because of the explicit prohibition under 327 IAC 19-14-4(e). If you feel that you need an approval to surface apply to frozen or snow-covered ground, your only option is to apply for a NPDES CAFO Individual Permit.

Please note that injection or incorporation of manure into the soil on the same day is not considered surface application and is not prohibited.

If you have an emergency that creates an immediate need to surface apply manure to frozen or snow-covered ground due to unforeseen circumstances beyond your control, contact IDEM for assistance.

What can I do in an emergency situation? (See 327 IAC 19-4-4(g))

An emergency situation is an unforeseen occurrence beyond the control of the farm which impacts the farm's ability to safely contain manure within its storage unit. Such emergencies would include natural disasters, extreme weather conditions or equipment or structural failure such as a water line break or an accident that compromises a lagoon wall.

In such situations the rule requires the farm to notify IDEM of their situation by phone before land applying. Call the IDEM Spill Line at (888) 233-7745 24 hours a day. The notification must include the following information.

- The CFO owner and farm name
- The farm identification number
- The reason for the emergency land application
- The date of the land application activity
- The estimated number of gallons to be applied
- The location of the land application fields

Once the emergency is abated the land application must cease. The emergency is considered abated when enough manure has been removed to restore sufficient capacity to not require land applying until weather and soil conditions are suitable. The farm operating record must contain documentation of any emergency land application and actions taken to abate the emergency. Land application to frozen or snow-covered ground that occurs under the situation described above must be done in compliance with all land application requirements of 327 IAC 19-14 and the following requirements:

1. Application only on land that has 2% or less slope or has at least 40% residue protection or crop cover.
2. No application in a flood plain.
3. The setback to surface waters must be at least 200 feet.
4. The rate must not exceed 50% of the appropriate agronomic rate.

Storm Water Management for CFOs

The storm water management requirements for CFOs is one of the areas where the requirements depend on the size of the farm and the type of approval or permit. CFOs that are below CAFO animal number thresholds and operating under a CFO Approval have different requirements than CAFOs & NPDES CAFO Individual Permit holders. This section addresses the requirements for CFOs. See the next section for information on the requirements for CAFOs and NPDES permit holders.

What activities and pollutant sources must a CFO consider when implementing storm water management? (See 327 IAC 19-11-2)

CFOs must consider:

1. Activities and materials that may reasonably be expected to add significant loads of pollutants to storm water draining from the operation.
2. Potential pollutant sources from the following:
   a. Access roads or pathways where raw materials such as feed, or waste materials or byproducts are used or generated at the operation.
   b. Refuse sites.
   c. Sites used for material handling equipment.
   d. Shipping and receiving areas.
   e. Vehicle parking areas.
   f. Any materials that are stored in a manner exposed to rainfall that could release pollutants into the storm water.
3. The location of any existing measures being used to reduce pollutants in storm water.
4. Practices employed to minimize contact of materials with storm water runoff.

What are the storm water management practices that apply to CFOs?

CFOs must implement the following management practices:

1. Maintain good housekeeping in areas where exposed materials could contribute to runoff.
2. Conduct preventative maintenance on storm water management devices.
3. Implement sediment control measures on areas identified as having potential for soil erosion. Areas should be vegetated and maintained to be free of soil erosion.
4. Maintain practices used to manage storm water runoff that serves to reduce pollutants in storm water discharges from the operation.

If IDEM determines that the practices are ineffective, additional control measures may be required.

What record keeping requirements apply to CFO storm water management?

CFO sized owners or operators must complete the CFO Storm Water Prevention Certification Form and keep it in the farm operating record.

Storm Water Management for CAFOs and NPDES CAFO Individual Permit Holders

The storm water management requirements for CFOs is one of the areas where the requirements depend on the size of the farm and the type of approval or permit. CAFO-sized CFOs and farms regulated under a NPDES CAFO Individual Permit have different requirements than CFOs operating under a CFO Approval. This section addresses the requirements for CAFOs and NPDES permit holders. See the previous section for information on the requirements for CFOs.

What storm water management requirements apply to CAFOs and NPDES CAFO Individual Permit holders? (See 327 IAC 19-11-1)

327 IAC 19-11-1 states that CFOs defined as CAFOs under the NPDES CAFO rule 327 IAC 15-16 must meet the storm water requirements in the federal rules 40 CFR 122.23(e) and 40 CFR 122.42(e)(1) through (e)(2). These federal regulations are explained below:

- 40 CFR 122.23(e) is known as the federal Ag Storm Water Discharge Exemption. It provides that a wet weather-related discharge of pollutants from a field after manure was land applied is exempt from violations if the land application was conducted in accordance with a site-specific nutrient management plan designed to ensure manure and process wastewater are applied at agronomic rates, and all state standards for land application are met.

- 40 CFR 122.42(e)(1) are the requirements for implementing a Nutrient Management Plan. 40 CFR 122.42(e)(2) are record keeping requirements. These regulations include the following requirements related to storm water management:

    1. Proper storage of manure to ensure manure is maintained within the approved storage structures. This prevents uncontained manure from contaminating storm water being discharged from the production area.
    2. Ensure mortalities are not stored or disposed of where storm water may become contaminated.
    3. Maintain clean water diversion efforts including guttering when they prevent roof drainage from contacting manure, feed, bedding or other potential contaminants.
    4. Ensure chemicals and other contaminants are not stored or disposed of in a storm water storage or treatment area.
    5. Maintain records of the above in the farm operating record.

What record keeping requirements apply to CAFO size storm water management?

CAFO-sized CFO's and Individual Permit owners or operators must complete the CFO Storm Water Management Requrement for Concentrated Animal Feeding Operations (CAFOs) form and keep it in the farm operating record.

Mortality Management

Mortality management is regulated by the CFO rule and regulations administered by the Indiana State Board of Animal Health (BOAH).

What requirements apply to mortality management? (See 327 IAC 19-7-6(a))

CFOs must manage mortalities and comply with BOAH 345 IAC 7-7 to ensure that:

1. There is no discharge of mortality or liquids that have been in contact with mortality from discharging to waters of the state.
2. There is no disposal of mortalities in a manure storage structure that is not specifically designed to treat animal mortalities.

What requirements apply to mortality compost sites? (See 327 IAC 19-7-6(b))

Mortality compost sites must comply with the setbacks for manure storage structures as described in the "Design and Construction Requirements & Site Restrictions for New Waste Management Systems" section of this guidance. (See also 327 IAC 19-12-3)

Mortality compost sites must be constructed and operated to:
1. Prevent leaching through the use of a concrete pad or compacted earthen surface.
2. Prevent run on and runoff of storm water.
3. Comply with the Indiana's Disposal of Dead Animals Law administered by the BOAH. (See IC 15-17-11 and 345 IAC 7-7 and the info below.)

How do the Indiana BOAH Regulations for disposal of dead animals apply to CFOs? (See IC 15-17-11 and 345 IAC 7-7)

One of the most important requirements of the BOAH regulations is that disposal of a dead animal occur not later than 24 hours after knowledge of death so as not to produce a nuisance. Other requirements apply as discussed below.

A CFO that is disposing of dead animals originating from its operation on its own property must comply with the disposal practices described in 345 IAC 7-7.

Composted mortality may be land applied using the same restrictions that apply to manure land application.

A CFO that is disposing of dead animals originating from other CFOs or any other source needs a disposal plant permit and may need a transportation permit from BOAH.

See this BOAH website for more information on requirements for dead animal disposal: http://www.in.gov/boah/2369.htm

See also the BOAH Policy on Processing Animal Carcasses here: http://www.in.gov/boah/2613.htm

Ground Water Monitoring Requirements

IDEM may require a CFO to have ground water monitoring for an existing or proposed waste management system if IDEM determines that monitoring is necessary to protect human health and the environment. Not all waste management systems will require monitoring. IDEM will evaluate the need for ground water monitoring on a case by case basis as described in this section.

This section also provides guidance on designing, installing, sampling, and evaluating the results from a ground water monitoring system.

Under what circumstances will IDEM require ground water monitoring for a waste management system? (See 327 IAC 19-10-1)

The CFO rule describes considerations that IDEM may use in determining the need for ground water monitoring:

1. The proximity of a ground water aquifer to the waste management system
2. The soil types located at and around the waste management system
3. Other site-specific factors at the location of the waste management system that may elevate the potential for ground water contamination

In general, the IDEM staff will be alert for conditions that represent a potential for migration of manure or its constituents into ground water when reviewing waste management system locations and designs. An example would be a large earthen lagoon in a location where sandy or other porous soils make the underlying ground water aquifer vulnerable to contamination.

How will the CFO know whether ground water monitoring will be required?

The CFO rule requires IDEM to provide a written description of the basis for requiring ground water monitoring. IDEM will notify the applicant during an application review that the need for ground water monitoring is being considered and may ask the applicant to provide additional information to aid in the determination before making a final decision.

If IDEM determines that ground water monitoring is required for a proposed waste management system, IDEM will notify the applicant in writing of the basis for the requirement and request that they submit a ground water monitoring plan for approval. IDEM will review the plan together with the other application materials before approving the waste management system.

If IDEM determines that ground water monitoring is required for an existing waste management system, IDEM will notify the CFO of the basis for the requirement and provide a deadline for submitting a ground water monitoring plan for approval.

What do the CFO rules require in the ground water monitoring plan?
(See 327 IAC 19-10-1(d)(3))

The ground water monitoring plan must include:

1. The list of parameters to be monitored, including at least the following:
    a. Field pH;
    b. Field specific conductance;
    c. Nitrates;
    d. Chloride;
    e. Fecal coliform bacteria;
    f. Sulfate; and
    g. Total dissolved solids.
2. The proposed monitoring frequency. **IDEM will recommend no less than one sample per well per quarter for the first two years.** After the first two years, the CFO may propose to reduce the frequency if the monitoring to that point is not showing ground water concerns.
3. A description of the sample collection methods and identification.
4. A description of sample preservation and shipment including field quality control.
5. A description of the analytical procedures including:
    a. The method detection limits; and
    b. The practical quantitation limits.
6. A description of the water sample chain of custody control measures.
7. A description of how the CFO will determine if there is a statistically significant increase over background values for each monitoring parameter except the field pH and field specific conductance. The plan must specify that the CFO will make this statistical determination for each sampling event.

See the additional guidelines for the ground water monitoring plan beginning on the next page.

What must the CFO do with the ground water monitoring results?

The CFO owner or operator must submit the ground water monitoring results to IDEM within 60 days after each sampling event. (See 327 IAC 19-10-1(f))

The CFO owner or operator must also evaluate the results for a statistically significant increase as described in the ground water monitoring plan. See ***"How do you determine statistically significant increases?"*** below for more guidance.

The CFO Approval or NPDES CAFO Individual Permit will have additional requirements related to ground water monitoring.

What must the CFO do if there is a statistically significant increase in a ground water monitoring parameter? (See 327 IAC 19-10-1(e))

If a sample result shows a statistically significant increase over background levels, the CFO owner must notify IDEM within 14 days. The notice must be in writing and must detail the findings of the statistical evaluation.

IDEM may require the CFO owner to take corrective action including correcting any deficiency in the waste management system that is allowing manure or manure constituents to contaminate ground water.

When can a CFO stop monitoring ground water? (See 327 IAC 19-10-1(g))

The CFO rule specifies that required monitoring must continue through the active life of the manure storage facility. The requirement for ground water monitoring will normally end once the manure storage facility is properly decommissioned and closed. (See the section of this guidance on Decommissioning and Closing Manure Storage Structures.)

The requirement for ground water monitoring may be extended beyond the closure of the storage structure if IDEM is requiring corrective action for ground water contamination caused by the facility.

Additional Guidance for the Ground Water Monitoring Plan

The information in this section up to this point provided an overview of the rule requirements for ground water monitoring. The following section provides more specifics to assist CFOs in developing a Ground Water Monitoring Plan.

Where do you place the monitoring wells and how many wells are needed?

Both the horizontal location and the vertical depth of the monitoring wells are important in designing a ground water monitoring system. When reviewing ground water monitoring plans, IDEM geologists will evaluate whether the horizontal and vertical position of the proposed wells will have the ability to detect changes to the ground water that may be coming from the waste management system. The underlying geology, including the ground water flow direction and the position of ground water aquifers, is important in determining appropriate well locations and depths.

IDEM recommends that CFOs seek advice from qualified professionals with experience in hydrogeology for developing a ground water monitoring plan and determining well placement. Consulting with IDEM's geology staff on well placement during development of the plan is also highly recommended as IDEM will not approve a ground water monitoring plan if the well placement is not correct.

The ground water monitoring system should consist of at least four wells screened in the uppermost aquifer and placed as follows:

- At least one hydraulically up gradient and three down gradient wells; or
- Encircling the waste management system that is to be monitored if ground water flow direction cannot be determined.

What regulations apply to monitoring well installations?

Monitoring well installations are subject to Department of Natural Resources regulations in 312 IAC 13-8-3. The procedures specified in 329 IAC 10-21-4(e) are also recommended to make sure the monitoring well installation is correct and produces reliable results. Improper well installation can cause considerable additional expense to remove, properly abandon, and reinstall so IDEM strongly recommends that CFO owners hire qualified well drillers with experience in monitoring well installation.

What type of information should be included in the sample collection and identification description in the ground water monitoring plan?

Sample collection procedures in environmental monitoring applications are commonly documented in a subset of the ground water monitoring plan called a sampling and analysis plan or SAP. A sampling and analysis plan is an invaluable document to guide sampling. Following a SAP will provide a level of certainty that the samples are consistent and comparable, with less concern about false indications of a release. Moreover, following an SAP will minimize the variables and unknowns between sampling events, and produce a more reliable outcome. To achieve these goals, IDEM recommends that CFO owners prepare a detailed SAP as a component of the ground water monitoring plan, and assure those who will be collecting the samples are familiar with and follow the SAP. A well-written SAP will guide the sampler step-by-step through the following basic elements of sample collection:

- Pre-planning: Listing and gathering the appropriate supplies and equipment before-hand.
- Laboratory Needs: Sample volumes, analytical methods, and sample holding times. For additional guidance, please refer to IDEM's document *Solid & Hazardous Waste Programs, Analytical Data Deliverable Requirements: Supplemental Guidance*.
- Documentation: Field notes and chain-of-custody.
- Pre-sampling Well Observations: Look for possible well concerns that may affect sampling results.
- Decontamination Procedures: Reduction of false results through sampling cleanliness.
- Water Levels: Measure to the .01 foot to determine ground water flow direction.
- Purging: Removal of stagnant water from the well prior to sample collection to assure ground water samples are comparable between sampling events and representative of actual subsurface conditions.
- Sample Collection: Step-by-step procedures for consistent sample collection.
- Field Quality Control: Provides checks on lab accuracy, sample matrix and possible sources of sample cross contamination; should include collection of a Duplicate Sample, a Matrix Spike/Matrix Spike Duplicate, Trip Blank (for volatile organic compounds), and an Equipment Blank for any nondesignated equipment.
- Sample preservation and shipping.

How do you determine statistically significant increases?

A statistically significant increase in ground water is an increase in concentration of a parameter above the background concentration for that parameter, which is too large to attribute to natural variation, sampling error, or laboratory error. This guidance recommends using the first 8 quarters of monitoring to establish statistical background limits for each of the monitoring parameters. The rest of this section describes that recommended approach in detail.

Note: The CFO rules require a statistical evaluation each time the owner/operator collects samples. In practice, the initial statistical evaluation using the procedure in this guidance will not occur until the ninth sampling event because the first 8 sampling events are used to establish the statistical background limit. However, if the sampling results during the first 8 quarters of monitoring show a markedly increasing trend indicating a problem with the waste management system, the statistical evaluation procedures described in this guidance may not be appropriate, and IDEM may require alternative procedures or corrective action.

Here is the recommended statistical evaluation program that would satisfy the requirement in 327 IAC 19-10-1(d)(3)(G):

1. Collect ground water samples and submit the results in a ground water monitoring report to IDEM within 60 days after the sample date every quarter for the first 2 years - 8 quarters.

2. Calculate the statistical background limit value for each monitored parameter by adding two standard deviations to the average of at least eight background concentrations. The example worksheets at the end of this section illustrate "interwell" and "intrawell" approaches to setting these statistical background limits. Include these calculations in the ground water monitoring report you submit to IDEM for the eighth quarter.

   (*Note: In a background dataset with 50% or fewer nondetect concentrations, any background value below the detection limit, should be replaced by one-half the detection limit for that parameter when calculating the average. If the background dataset contains more than 50% nondetects, the background value is the highest value of the dataset.*)

3. Begin ground water monitoring on a semiannual schedule or the schedule specified in your CFO Approval or NPDES CAFO Individual Permit.

4. Do a statistical evaluation for each semiannual sampling event. Compare the monitoring results for each parameter to the statistical background limits calculated in step 2 above. Report any results that exceed the limit to IDEM in writing within 14 days. The example worksheets at the end of this section illustrate "interwell" and "intrawell" approaches to this evaluation.

   Continue to submit monitoring results in a ground water monitoring report within 60 days after the date of each sample date.

Can CFOs use a different statistical evaluation approach?

Other statistical evaluation approaches are possible. IDEM will evaluate alternative approaches on their technical and scientific merit. Alternative approaches must reflect valid statistical analysis appropriate for the distribution of the data, and provide a reasonable balance between the probability of falsely identifying a significant difference and the probability of failing to identify a significant difference at 95% confidence.

What happens if ground water monitoring shows a statistically significant increase in a monitored parameter?

When ground water monitoring shows a statistically significant increase, IDEM may require the CFO owner to implement an "Assessment Monitoring Program" designed to evaluate the extent of the problem, or a "Corrective Action Program" to correct the problem or both.

An Assessment Monitoring Program may include monitoring on a quarterly basis and expanding the list of monitored parameters based on the characteristics of the waste placed in the lagoon or parameters that could leach from the surrounding soils or rock should liquid from the waste come in contact with those materials. Assessment monitoring should continue until sampling results over a one-year period no longer show a statistically significant increase of the monitored parameters.

IDEM may require a Corrective Action Program if monitored parameters exceed any of these Ground Water Protection Standards (GWPSs):

- A US EPA maximum contaminant level (MCL)
- Two times a US EPA secondary maximum contaminant level (SMCL), for example, chloride, sulfate, and total dissolved solids.
- Background concentrations if no MCL or SMCL exist.

Ground water monitoring will be required during a Corrective Action Program at least semiannually. A Corrective Action Program is successfully completed when all parameters are below the GWPSs for three consecutive years.

What if the ground water contamination is not coming from the CFO?

A CFO may demonstrate that the statistically significant increase of a specified parameter is not attributable to the facility. The demonstration may include a determination that the facility is not the source of the statistical increase; or that the increase resulted from natural variation, an error in sampling, laboratory analysis, or statistical evaluation. During the demonstration, and if the demonstration is successful, the facility remains in the ground water monitoring program applicable at the time of the reported statistically significant increase. If the demonstration fails, IDEM may require the CFO to implement an Assessment Monitoring Program or a Corrective Action Program, as applicable.

Example Worksheet for Statistical Exceedance for Chloride

Intrawell Comparison (Within Well)

Chloride Results: 2008 thru 2011

Sampling Date	Sample Location	Well Purpose	Concentration (mg/L)
3/5/2008	Well 1	Background	25.21
6/9/2008	Well 1	Background	52.36
9/16/2008	Well 1	Background	5.00 *
12/8/2008	Well 1	Background	79.14
3/22/2009	Well 1	Background	49.63
6/26/2009	Well 1	Background	36.33
9/22/2009	Well 1	Background	51.78
12/27/2009	Well 1	Background	66.95
6/23/2010	Well 1	Compliance	29.55
12/15/2010	Well 1	Compliance	42.15
6/7/2011	Well 1	Compliance	50.01
12/9/2011	Well 1	Compliance	48.23

Summary Statistics	
Well 1 First 8Q Average (A) (mg/L)	45.80
Standard Deviation (SD)	23.39
2 Standard Deviations (2SD)	46.79
Statistical Limit (A+2SD) (mg/L)	92.59

Semiannual compliance sampling starts 6/23/2010 for all wells

* Laboratory Detection Limit = 10, DL/2 = 5

Sampling Date	Sample Location	Well Purpose	Concentration (mg/L)
3/5/2008	Well 2	Background	49.87
6/9/2008	Well 2	Background	51.23
9/16/2008	Well 2	Background	44.78
12/8/2008	Well 2	Background	40.21
3/22/2009	Well 2	Background	46.29
6/26/2009	Well 2	Background	34.57
9/22/2009	Well 2	Background	57.41
12/27/2009	Well 2	Background	41.11
6/23/2010	Well 2	Compliance	30.74
12/15/2010	Well 2	Compliance	61.25 *
6/7/2011	Well 2	Compliance	55.62
12/9/2011	Well 2	Compliance	62.48 *

Summary Statistics	
Well 2 First 8Q Average (A) (mg/L)	45.68
Standard Deviation (SD)	7.19
2 Standard Deviations (2SD)	14.37
Statistical Limit (A+2SD) (mg/L)	60.05

Semiannual compliance sampling starts 6/23/2010 for all wells

* Statistical Limit Exceeded

Sampling Date	Sample Location	Well Purpose	Concentration (mg/L)
3/5/2008	Well 3	Background	61.32
6/9/2008	Well 3	Background	59.20
9/16/2008	Well 3	Background	83.56
12/8/2008	Well 3	Background	77.41
3/22/2009	Well 3	Background	72.11
6/26/2009	Well 3	Background	69.54
9/22/2009	Well 3	Background	76.35
12/27/2009	Well 3	Background	78.67
6/23/2010	Well 3	Compliance	80.95
12/15/2010	Well 3	Compliance	**106.87** *
6/7/2011	Well 3	Compliance	**114.92** *
12/9/2011	Well 3	Compliance	**130.29** *

Summary Statistics	
Well 3 First 8Q Average (A) (mg/L)	72.27
Standard Deviation (SD)	8.53
2 Standard Deviations (2SD)	17.07
Statistical Limit (A+2SD) (mg/L)	89.34

Semiannual compliance sampling starts 6/23/2010 for all wells

* Statistical Limit Exceeded

Sampling Date	Sample Location	Well Purpose	Concentration (mg/L)
3/5/2008	Well 4	Background	<10.00 *
6/9/2008	Well 4	Background	<10.00 *
9/16/2008	Well 4	Background	72.64
12/8/2008	Well 4	Background	<10.00 *
3/22/2009	Well 4	Background	39.47
6/26/2009	Well 4	Background	<10.00 *
9/22/2009	Well 4	Background	<10.00 *
12/27/2009	Well 4	Background	54.61
6/23/2010	Well 4	Compliance	40.11
12/15/2010	Well 4	Compliance	70.36
6/7/2011	Well 4	Compliance	69.12
12/9/2011	Well 4	Compliance	72.21

Summary Statistics	
Well 4 First 8Q Average (A) (mg/L)	NA
Standard Deviation (SD)	NA
2 Standard Deviations (2SD)	NA
Over 50% Nondetects (5 of 8 NDs)	62.50%
Statistical Limit: Highest Value	72.64

Semiannual compliance sampling starts 6/23/2010 for all wells

* Laboratory Detection Limit = 10. 5/8 = 62.5% <10

Average = $c_1+c_2+c_3+.....+c_n/n$
c = Concentration
n = Sample Size

Standard Deviation = $\sqrt{\frac{\sum\left(c-\bar{c}\right)^2}{n-1}}$

$\sum$ = Sum of Quantity $()^2$
c = Concentration
$\bar{c}$ = Average Concentration
n = Sample Size

Example Worksheet for Statistical Exceedance for Chloride

Interwell Comparison

Chloride Results: 2008 thru 2011

Sampling Date	Sample Location	Well Purpose	Concentration (mg/L)	Sampling Date	Sample Location	Well Purpose	Concentration (mg/L)
3/5/2008	Well 1	Upgradient	25.21	3/5/2008	Well 2	Downgradient	49.87
6/9/2008	Well 1	Upgradient	52.36	6/9/2008	Well 2	Downgradient	51.23
9/16/2008	Well 1	Upgradient	5.00 *	9/16/2008	Well 2	Downgradient	44.78
12/8/2008	Well 1	Upgradient	79.14	12/8/2008	Well 2	Downgradient	40.21
3/22/2009	Well 1	Upgradient	49.63	3/22/2009	Well 2	Downgradient	46.29
6/26/2009	Well 1	Upgradient	36.33	6/26/2009	Well 2	Downgradient	34.57
9/22/2009	Well 1	Upgradient	51.78	9/22/2009	Well 2	Downgradient	57.41
12/27/2009	Well 1	Upgradient	66.95	12/27/2009	Well 2	Downgradient	41.11
6/23/2010	Well 1	Upgradient	29.55	6/23/2010	Well 2	Downgradient	30.74
12/15/2010	Well 1	Upgradient	42.15	12/15/2010	Well 2	Downgradient	61.25
6/7/2011	Well 1	Upgradient	50.01	6/7/2011	Well 2	Downgradient	55.62
12/9/2011	Well 1	Upgradient	48.23	12/9/2011	Well 2	Downgradient	62.48

Sampling Date	Sample Location	Well Purpose	Concentration (mg/L)	Sampling Date	Sample Location	Well Purpose	Concentration (mg/L)
3/5/2008	Well 3	Downgradient	61.32	3/5/2008	Well 4	Downgradient	<10.00
6/9/2008	Well 3	Downgradient	59.20	6/9/2008	Well 4	Downgradient	<10.00
9/16/2008	Well 3	Downgradient	83.56	9/16/2008	Well 4	Downgradient	72.64
12/8/2008	Well 3	Downgradient	77.41	12/8/2008	Well 4	Downgradient	<10.00
3/22/2009	Well 3	Downgradient	72.11	3/22/2009	Well 4	Downgradient	39.47
6/26/2009	Well 3	Downgradient	69.54	6/26/2009	Well 4	Downgradient	<10.00
9/22/2009	Well 3	Downgradient	76.35	9/22/2009	Well 4	Downgradient	<10.00
12/27/2009	Well 3	Downgradient	78.67	12/27/2009	Well 4	Downgradient	54.61
6/23/2010	Well 3	Downgradient	80.95	6/23/2010	Well 4	Downgradient	40.11
12/15/2010	Well 3	Downgradient	**106.87** *	12/15/2010	Well 4	Downgradient	70.36
6/7/2011	Well 3	Downgradient	**114.92** *	6/7/2011	Well 4	Downgradient	69.12
12/9/2011	Well 3	Downgradient	**130.29** *	12/9/2011	Well 4	Downgradient	72.21

Upgradient Summary Statistics	
Well 1 First 8Q-Average (A) (mg/L)	45.80
Standard Deviation (SD)	23.39
2 Standard Deviations (2SD)	46.79
Statistical Limit (A+2SD) (mg/L)	92.59
* Laboratory Detection Limit = 10, DL/2 = 5	

Downgradient Summary for 1st 8 Quarters	
Well 2 First 8Q-Average (A) (mg/L)	45.68
Well 3 First 8Q-Average (A) (mg/L)	72.27
Well 4 First 8Q-Average (A) (mg/L)	NA
Well 4 First 8Q > 50% Nondetects (5 of 8 NDs)	62.50%
Well 4 Compare Concentration: Highest Value	72.64

Semiannual compliance sampling starts 6/23/2010 for all wells downgradient wells

* Statistical Limit Exceeded

Average = $c_1+c_2+c_3+.....+c_n/n$

c = Concentration

n = Sample Size

Standard Deviation = $\sqrt{\frac{\sum\left(c-\bar{c}\right)^2}{n-1}}$

$\sum$ = Sum of Quantity $()^2$

c = Concentration

$\bar{c}$ = Average Concentration

n = Sample Size

Decommissioning or Closing Manure Storage Structures

Closure of a manure storage structure can be temporary or permanent. The type of structure will dictate the steps that need to be followed. Specific rules apply and are addressed in this section.

A manure storage structure is deemed closed when the environmental threat has been removed.

When is a manure storage structure considered "closed"?

(See 327 IAC 19-15-1 & 2)

A manure storage structure is considered closed when all manure has been removed to the extent that is practical. Owner/operators must maintain manure storage structures in accordance with the Indiana CFO rule until the manure is removed. Closure of waste storage structures must follow NRCS Conservation Practice Standard Code 360, Closure of Waste Impoundments, Oct 2004.

How do I request closure of a portion of a manure storage structure?

If an operation is planning to close a portion of the waste storage structure, but is not closing it entirely, the owner/operator must notify IDEM and will need to recalculate the storage capacity for the modified CFO.

What requirements apply to demolishing or converting the use of a manure storage structure?

A CFO must notify IDEM before demolishing or converting the use of a manure storage structure. The notification must describe the intended future use if it is converted.

Please remember that most construction and demolition debris is solid waste that must be disposed of at a permitted solid waste facility such as a landfill or transfer station. If you plan to burn demolition debris, you must comply with 326 IAC 4-1. If you have questions about disposal of construction debris or open burning regulations, you can contact IDEM for additional guidance.

What steps must I follow to close a manure storage structure?

The owner/operator of a CFO who plans to close or discontinue use of a manure storage structure must:

1. Remove all the manure from the manure storage structure and:
    a. Apply it to the land in compliance with the manure land application sections of this rule, or
    b. Manage it in accordance with this rule as well as applicable state and federal laws
2. Remove all associated equipment and conveyance structures from uncovered liquid manure storage structures

3. Continue to maintain the manure storage structure so there is no release until the manure is removed
4. Submit a notification form to IDEM within 30 days of closure of the CFO [Refer to "Closure Certification" form (State Form 55054) of the record book]
5. Pass an IDEM closure inspection

If additional closure activities are required to protect human health and the environment, IDEM will notify the CFO in writing specifying those activities.

Exiting the CFO Approval Program

Exiting the CFO program should be done with careful review and consideration. Once an operation has exited the program, the approval is no longer valid. Reestablishing the approval requires a new application under the rules in effect at the time of the application. This will involve public notification, new application preparation and additional application fees. Operations that become idle may return to production when economic situations improve or when ownership is transferred. A new operator may benefit from maintaining the existing approval. Based on site-specific reasons and situations, some CFO owners/operators may determine that exiting the program is the best business decision. This section describes how to exit the CFO program.

When can an operation exit the CFO program? (See 327 IAC 19-16-2 and 327 IAC 19-16-3)

There are two ways a farm can exit the program:

1. A confined feeding operation may be removed from the regulated confined feeding approval program, but continue to operate as a smaller operation, if IDEM has been notified that the confined feeding operation has and will maintain fewer than the following number of animals:
    a. 300 cattle
    b. 600 swine
    c. 600 sheep
    d. 30,000 fowl
    e. 500 horses

2. A CFO may be removed from the regulated confined feeding approval program and completely closed if the department has been notified that:
    a. All livestock animals are removed from the site; and
    b. The confined feeding operation properly closed all manure storage structures.

How does a CFO owner request to exit the CFO program?

The record book includes a “CFO Request for Exiting the Program” form (State Form 49827). Completing this form and submitting it to IDEM’s Confined Feeding Permits Section will notify the department that an operation requests removal from the CFO Program. IDEM will inspect the farm to determine if the exiting request should be granted.

Exiting the Program will be granted if:

- The operation has no animals or manure and does not intend to return to production; or
- The operation’s number of animals is below the CFO threshold, does not intend to expand to the CFO threshold and all approved manure structures are in compliance with current rule requirements. For example, all structures are structurally sound and effectively containing the manure. Lagoons have at least two feet of freeboard. The operation has effective run-off/run-on control to prevent contaminated stormwater runoff.

If an operation does not meet these exiting criteria, the inspector will write a review of actions needed to meet the program standards and provide a copy to the owner/operator.

Compliance and Inspection Activities

Inspections determine compliance with the regulations and update IDEM on the status of a farm operation (i.e., out of business or exiting IDEM's CFO program). Most inspections are routine and do not involve a complaint or a spill.

What are the regulatory citations that might be referenced during a compliance inspection?

327 IAC 19 Confined Feeding Operations
327 IAC 15-16 Concentrated Animal Feeding Operations
IC 13-18-4-5 Restrictions on pollution of water: unlawful acts
IC 13-30-2-1 Prohibited acts: acts prohibited/potential discharge
IC 13-18-10-2.1 Confined feeding control: IDEM determination on application
327 IAC 2-1-6 Water quality standards
327 IAC 2-6.1 Spills; reporting, containment, and response
IC 13-18-10-1 Confined feeding control: IDEM approval must precede construction of confined feeding operation
IC 13-18-10-2.1(d) Confined feeding control: IDEM determination on application/possible violation of approval

Will I be notified of an upcoming inspection?

The inspectors will make a reasonable effort to contact the owner/operator at least 24 hours before routine and follow-up inspections of a confined feeding operation. The inspector should communicate the specific date and approximate time of the inspection. The owner/operator is to accompany the inspector when possible. If reasonable efforts to contact the owner/operator are unsuccessful, the inspector may conduct the inspection unannounced. **An investigation of a complaint or a spill requires no prior notification.**

What bio-security measures will be implemented to protect my livestock?

Discussion of bio-security measures and issues should take place during initial inspection conversations. Inspectors will follow Agency Bio-Security Policy procedures during announced and unannounced, complaint or spill inspections. Document bio-security procedures required beyond the basic procedures listed below in writing and provide them to the inspector for their records. The inspector also should note the disease status of the operation and schedule inspections appropriately.

The inspector will present credentials and follow the bio-security policy procedures developed in conjunction with the Indiana State Board of Animal Health. During the inspection, the inspector will wear disposable boots, or use site-specific clothing and footwear as directed by the operation. Any operation-specific bio-security equipment must be available at the CFO for use by the inspector.

To reduce disease transmission, inspectors will not enter the confined feeding buildings unless necessary. IDEM staff will comply with any reasonable site-specific bio-security plan that does not delay or impede a site inspection.

What are my responsibilities as an owner/operator? (See IAC 327 19-4-1(5))

The owner/operator must allow the inspector to:

1. Enter the confined feeding operation premises.
2. Have access to records kept under the terms and conditions of the approval and the rule (When necessary, inspectors may request copies of specific records.)
3. Inspect at reasonable times any monitoring equipment or method, waste management systems or practices required or otherwise regulated under the approval and the rule.
4. Sample or monitor any release to evaluate compliance with the approval or as otherwise authorized.

What will the inspector review to determine compliance?

1. The inspector will review the operation's approval to determine compliance with approval conditions and rule regulations.
2. The inspector will review the items listed in the "Compliance Guide" in the record book along with any site-specific requirements. The time allowed for actions required to return to compliance, if deemed necessary, will be included in the report.

The inspector will document their findings and observations. The inspection findings will be reviewed with the owner/operator if he or she is present. If the inspector is unable to complete the inspection report on site or the owner/operator is not present, a copy of the inspection report will be mailed within 45 days following the inspection.

In an enforcement situation, IDEM investigates the circumstances surrounding the cause of the noncompliance and looks first to the person or persons actually responsible for the violation.

Noncompliance with an approval condition is a violation and the owner is responsible for assuring compliance with the conditions of the approval. Any allocation of liability among private parties is a private, contractual matter. Such private contracts do not affect IDEM's ability to enforce the conditions of the approval.

Questions and/or concerns regarding inspection procedures or inspectors should be sent in writing to:

IDEM, Office of Land Quality
Confined Feeding Compliance Section
Section Chief,
100 North Senate Avenue,
IGCN 1101
Indianapolis, In 46204-2251

What happens if a CFO has an ongoing compliance problem?

IDEM's policy is to work with CFOs to resolve any outstanding compliance problems. Taking formal enforcement action generally is the result of an operator not adequately responding to requests to correct operational problems or to situations in which the

water quality has been threatened or harmed. IDEM reserves the right to initiate enforcement action for any violation of the rule in order to maintain the integrity of the program and to protect the environment and public health. IDEM will operate the compliance program consistent with these criteria.

Other Environmental Regulations That Apply to CFOs

Several other state regulations exist and may apply to CFO production activities. Listed below are some of the most commonly violated regulations. The rules have been summarized here and are not comprehensive. Refer to the specific rule for a complete explanation of the regulation.

Manure Transport and Handling (See 327 IAC 19-13-3)

Pumping, dumping, or allowing the leakage or drainage of manure from a transfer vehicle onto unauthorized premises, public thoroughfares, or into the waters of the state is prohibited.

State Chemist Fertilizer Applicator Certification Rule (See 355 IAC 7-1-1)

This certification program administered by the Office of Indiana State Chemist affects anyone who applies more than 10 cubic yards or 4,000 gallons of manure from a CFO to land in Indiana.

Spill Rule (See 327 IAC 2-6.1)

The Indiana Spill Rule applies to the reporting and containment of, and response to, spills of hazardous substances, extremely hazardous substances, petroleum and objectionable substances that are of a quantity, type, duration and in a location to damage the waters of the state. The requirements in the CFO rule for responding to a manure release supersede the spill rule requirements. Compliance with the Emergency Response Plan will be compliance with the spill rule.

All farms have a number of materials other than manure which, if spilled, would be reportable under this rule. Some of these materials include fuels, lubricants, dairy products, pesticides and fertilizers. Any one of these materials has the potential to degrade water quality and even cause illness, injury or death of aquatic life. Containment, reporting and clean up of these spills helps ensure that the citizens of Indiana protect surface and ground waters for future uses such as drinking, recreation and agriculture. It is important to remember that all spills must have an immediate response and that spills to water usually have a greater potential for environmental harm.

The responsibilities of those who spill are listed in the rule and include:

1. Contain spilled materials from waters of the state,
2. Initiate a spill response, including the most effective containment action possible,
3. Report the spill within 2 hours of discovery to the Department of Environmental Management, Spill Line, **1-888-233-7745**. Criteria for determining if a spill should be reported are listed separately for facilities (on your property) and transportation (off your property).
4. Submit a spill report to IDEM if requested in writing by the department,
5. Notify neighbors and downstream water users if spills enter water or their property.

The rule is several pages long and this summary explanation is not comprehensive. For more information, please read the spill rule in its entirety. For more specific questions or to report spills, please contact the Indiana Department of Environmental Management, Emergency Response staff at 888-233-7745.

Storm Water Run-Off Associated with Construction Activity (See 327 IAC 15-5)

327 IAC 15-5 requires soil erosion controls for construction sites with disturbed areas of one acre or more. Contact your county Soil and Water Conservation District (SWCD) office for more information. Technical resource information available through the SWCD includes the Indiana Stormwater Quality Manual (formerly Indiana Handbook for Erosion Control) and the United States Department of Agriculture (USDA), NRCS Critical Area Planting Specification # 342, which details recommended methods for site stabilization.

Public Water Supply (See 327 IAC 8-3-2(a))

A facility that provides water to over 25 people for normal use is a public water supply. As a public water supply, there are requirements to be met before and after the facility is constructed. Please contact Phil Hiestand of the IDEM Office of Water Quality, Drinking Water Branch at (317) 234-7428 for more information.

Satellite Manure Storage Structures (SMSS) (See IC 13-18-10.5 and draft regulation 327 IAC 20)

In 2011, the Indiana General Assembly enacted a law requiring IDEM approval for satellite manure storage structures. A manure storage structure is a SMSS if it meets the following critieria:

- It is designed to store at least one million gallons or five thousand cubic yards.
- It is not located at a livestock or poultry production area.
- It is not used to store manure from a regulated CFO that is owned or operated by the owner or operator of the SMSS. (Structures used to store manure from an owner or operator's own CFO are subject to the CFO Rule even if they are not located at or near the animal production area.)

IDEM is drafting rules for SMSSs. The design requirements and permitting standards will be similar to those for CFOs. To learn more, please contact the IDEM CFO permitting program staff at (317) 232-4473.

Biomass Digesters (See IC 13-20-10.5 and 327 IAC 19-13-2)

Biomass digesters proposed for construction at a regulated CFO for digesting manure and related biomass require approval as a manure storage structure. The application and approval process is the same as proposing any other manure storage structure, and any such digester would be included in the facility's CFO approval. Sites with approved digesters who want to accept digestible waste streams in addition to manure should obtain approval from IDEM to do so. This can be accomplished by completing the Biomass Digester/Gasification Facility Registration Application (State Form 55309 (R/11-13)) and submitting it with a request to amend the facility's CFO approval. This form can be downloaded at https://forms.in.gov/Download.aspx?id=11204.

Compost Facility Registration (See IC 13-20-10)

The compost facility registration process was expanded in 2014 to allow the composting of "other organic material" as well as the landscaping and yard waste vegetative matter. Composting of manure by the CFO is handled as part of the CFO approval process. Composting of manure by a non-CFO entity would be covered by the new Compost Facility Registration Process. Additional information related to composting facilities can be found on the IDEM website at https://forms.in.gov/Download.aspx?id=5780

Construction near Wetlands

Activities that could impact a wetland area must be evaluated and approved by IDEM or the Army Corps of Engineers before the activity begins. Page 35 of this guidance provides additional discussion regarding wetland areas and their protection. Additional information related to wetlands can be found on the IDEM website at http://www.in.gov/idem/wetlands/2344.htm

Open Dumping (See IC 13-30-2-1, IC 36-9-30-35 and 329 IAC 10)

Dumping is prohibited. To cause or allow the open dumping of garbage or of any other solid waste is in violation of the solid waste rules. All regulated solid waste must be disposed of at a state permitted solid waste facility. The owner of real estate upon which an open dump is located is responsible for correcting and controlling any nuisance conditions which must include removal of all solid waste and disposal of such waste in a permitted solid waste facility, or other methods approved by the commissioner.

The only materials excluded from this prohibition that may be dumped or buried are:
1. Uncontaminated rock, bricks, concrete, road demolition waste or dirt;
2. Uncontaminated and untreated natural growth including tree limbs, stumps, leaves and grass clippings;
3. Sawdust that is derived from processing untreated natural wood.

Regulated solid waste includes but is not limited to: household garbage, construction and demolition debris, appliances, furniture, tires, plastic, cardboard and hazardous waste.

Open Burning (See IC 13-30-2-1, IC 13-17-9, and 326 IAC 4-1)

Open burning is defined under 326 IAC 4-1-0.5(6) as "the burning of any materials wherein air contaminants resulting from combustion are emitted directly into the air, without passing through a stack or chimney from an enclosed chamber." Open burning generally is prohibited in Indiana. There are exceptions which are described in the statute and rule on "Open Burning," found in IC 13-17-9 and 326 IAC 4.

The following are types of fires that are allowed:

- Maintenance burning of vegetation on a farm, orchard, nursery, tree farm, and agricultural land;
- Recreational or ceremonial fires of clean wood, charcoal, paper, or petroleum products;

- Burning, for the purpose of heating, using clean wood products or paper in a noncombustible container between October 1st and May 15th. Burning for heating may not be conducted for disposal purposes.
- Prescribed burning by the Indiana Department of Natural Resources or the U.S. Forest Service;
- Undesirable wood structures or wood remnants of demolition of predominantly woods structures in unincorporated areas. Examples include old chicken coops, corn cribs, sheds and old wooden barns.
- Burning of natural growth derived from a clearing operations for change in use of the land may be authorized with prior approval.

Open Burning at Private Residences:

Residential open burning (household or yard waste) is banned completely in Lake, Porter, Clark, and Floyd counties. In all other Indiana counties, private residential open burning is permitted by state rule in accordance with the following:

- Only paper or clean wood products (woody vegetation, leaves, or wood, which is not coated with stain, paint, glue or other coating material, and no treated lumber) may be burned.
- Burning other types of household waste such as various types of plastic, garbage, and trash is illegal.
- Materials may only be burned in a noncombustible container that is sufficiently vented to induce adequate combustion and has enclosed sides and a bottom; burning on the ground is illegal.

Burning activities must comply with all other federal, state and local laws, rules and ordinances. It is particularly important that residents check with their local fire or health department because some cities or counties may have local ordinances, which may be more stringent than state open burning laws.

Emergency Burning:

While burning is certainly not encouraged, the IDEM's Office of Air Quality (OAQ) recognizes that emergency burning may, in some cases, be needed to address an imminent threat to health or the environment following a disaster. Clean wood waste, vegetation, or deceased animals resulting from a natural disaster where failure to burn would result in an imminent health, safety, or environmental hazard may be granted with prior approval. IDEM has established a procedure for emergency burning of clean wood waste, vegetation, and deceased animals resulting from such a disaster. A copy of the Emergency Burning for Disasters Fact Sheet is available at http://www.in.gov/idem/files/factsheet_emergencyburn.pdf

Conditions Allowing Open Burning:

All of the various allowable open burning activities described on this page can only be performed under certain conditions:

- Burning must occur during safe weather conditions, not during high winds, temperature inversions or on pollution alert days.
- Burning must occur during daylight hours.
- Fires must be attended until completely extinguished.
- Fires must be extinguished if they create a hazard, nuisance, pollution problem or threat to public health.
- Fire fighting equipment adequate for the size of the fire must be nearby.
- Burning activities must comply with all other federal, state and local laws, rules and ordinances.
- Asbestos may not be burned.

This summary of the open burning rule is not comprehensive. For more information, please read the open burning rule in its entirety (http://www.in.gov/legislative/iac/T03260/A00040.PDF).

Additional information is available at http://www.in.gov/idem/airquality/2411.htm

Appendix Contents:

I. Manure and Nutrient Management Reference and Website List
II. Manure, Soil and Plant Testing Resources
III. Natural Resource Conservation Service Field Office Tech Guide Reference
IV. Purdue Publication AY 278 "Estimating Manure Spreader Capacity"
V. Purdue Publication AY 277 "Calculating Manure and Manure Nutrient Application"
VI. Indiana's Confined Feeding Control Law
VII. Definitions that apply to Indiana's Confined Feeding Control Law
VIII. Preliminary Site Evaluation of CFO in Mapped Karst Areas

I. Manure and Nutrient Management Reference and Website List

NRCS

NRCS National Nutrient Management Homepage – Lists on-line Nutrient Management Tools, Other Nutrient Management Tools, Documents and Technical References, Databases, Links to other Nutrient Homepages
http://www.nrcs.usda.gov/wps/portal/nrcs/main/national/landuse/crops/npm

NRCS Web Soil Survey – Official soils information for every county in Indiana:
http://websoilsurvey.sc.egov.usda.gov/App/HomePage.htm

Unified National Strategy for AFOs (USDA and EPA)
http://cfpub.epa.gov/npdes/afo/ustrategy.cfm?program_id=7

Manure Nutrients available vs. crop growth requirements:
http://www.nrcs.usda.gov/wps/portal/nrcs/detail/national/technical/nra/rca/?&cid=nrcs143_014175

NRCS Homepage
http://www.nrcs.usda.gov/wps/portal/nrcs/main/national/home

NRCS Technical Resources
http://www.nrcs.usda.gov/wps/portal/nrcs/main/national/technical

http://www.nrcs.usda.gov/wps/portal/nrcs/main/national/technical/fotg.

NRCS Technical Tools including a Manure Decision system
http://www.nrcs.usda.gov/wps/portal/nrcs/main/national/technical/tools

Purdue University Extension

Purdue Agronomy's Software Homepage – Manure Management Planner – Dr. Brad Joern's Computer Program, WinMax2 – MAX Recordkeeping Program
http://www.purdue.edu/agsoftware/

Purdue Livestock (Dairy) Page
http://www.extension.purdue.edu/dairy/

Purdue Pork Page (lists publications and other links)
http://www.extension.purdue.edu/pork/

Purdue Pork Page – Manure Management
Link on page listed for pork page

Purdue Extension Publications
http://www.extension.purdue.edu/extmedia/menu.htm

Other University Extension Information and Publications

Iowa State University – Iowa Manure Management Action group
http://www.agronext.iastate.edu/immag/

Michigan Manure Resources Network – Michigan State University Extension
http://www.ctic.purdue.edu/resourcedisplay/154/

University of Minnesota – Manure Resources List
http://www1.extension.umn.edu/dairy/manure/

Nebraska Waste Management (Livestock Manure Management)
http://water.unl.edu/web/manure/policy-regs

North Carolina
http://www.bae.ncsu.edu/programs/extension/proindex.html
http://www.cals.ncsu.edu/waste_mgt/apwmc.htm
http://harnett.ces.ncsu.edu/index.php?page=animalagriculture

The Ohio State University
http://ohioline.osu.edu/b604/

Other Sources

Agricultural Research Services (ARS) National Program – Manure and Byproduct Utilization
http://www.ars.usda.gov/research/programs/programs.htm?np_code=206

Plant and Life Sciences Publishing (Formerly Natural Resource, Agriculture and Engineering Service
http://www.nraes.org/nra_order.taf?_function=view&ct_id=5

Manure and Nutrient Management
http://omafra.gov.on.ca/english/livestock/dairy/waste/index.html (dairy)
http://omafra.gov.on.ca/english/livestock/swine/manure.html (swine)

EPA-NPS
http://water.epa.gov/polwaste/nps/pubs.cfm

EPA-AFO's
http://www.epa.gov/agriculture/anafoidx.html

Manure Handling Companies

CST Industries – Slurrystore Systems (Storage Structures)
http://cstindustries.com/products/slurrystore/#page=page-1

Balzer Inc – Spreaders, handling systems
http://www.balzerinc.com/

Hydro-Engineering, Inc – Injectors, drag hoses, pumps
http://www.hydro-eng.com/

Top Air Equipment – Better Bilt Spreaders, Injectors, and hauling systems
http://www.topairequip.com/

II. Manure, Soil and Plant Testing Resources

Agronomic Soil Testing Laboratories Participating in the North American Proficiency Testing Program (NAPT, Coordinated by the American Society of Agronomy)

Indiana

A&L Great Lakes Laboratory
Fort Wayne, IN, 46808-4414
Tel: 260-483-4759
Fax: 260-483-5274
http://www.algreatlakes.com

Agri-Labs, Inc.
Auburn, IN, 46706-2678
Tel: 517-369-6052
Fax: 517-369-5522
http://www.agri-labsinc.com

Sure-Tech Laboratories
Indianapolis, IN, 46221
Tel: 317-243-1502
Fax: 317-243-1527
jmjaynes@landolakes.com

The Farm Clinic, Inc.
Frankfort, IN, 46041-7659
Tel: 765-659-1783
Fax: 765-659-1784
deb@thefarmclinic.com

Illinois

Ingrams Soil Testing
Athens, IL, 62613
Tel: 217-636-7500
Fax: 217-636-7548
http://www.ingramsoil.com

Pro-Ag Consulting, LLC
Windsor, IL, 61957
Tel: 217-459-2029
Fax: 217-459-2103
proagllcchuck@consolidated.net

SGS - Toulon
Toulon, IL, 61483
Tel: 309-286-2761
Fax: 309-286-6251
http://www.sgs.com

SGS North America
Belleville, IL, 62221
Tel: 618-233-0445
Fax: 618-233-7292
http://www.alveylabs.com/

Soiltech, Inc.
Arlington, IL, 61312
Tel: 815-910-5008
Fax: 815-638-2522
sti@dishmail.net

Kentucky

UK Lexington Soils Laboratory
Lexington, KY, 40546-0275
Tel: 859-257-2785
Fax: 859-257-7351
http://soils.rs.uky.edu

Waters Agricultural Lab - Owensboro
Owensboro, KY, 42301
Tel: 270-685-4039
Fax: 270-685-3989
http://www.watersag.com

Michigan

Litchfield Analytical Service
Litchfield, MI, 49252
Tel: 517-542-2915
Fax: 517-542-2014
litchlab@qcnet.net

MSU Soil & Plant Nutrient Laboratory
East Lansing, MI, 48824-1325
Tel: 517-355-0218
Fax: 517-355-1732
http://www.css.msu.edu/soiltesting

Ohio

Brookside Labs Inc.
New Knoxville, OH, 45871
Tel: 419-753-2448
Fax: 419-753-2949
http://www.blinc.com

CALMAR Soil Testing Laboratory
Westerville, OH, 43081
Tel: 614-523-1005
Fax: 614-523-1004
http://www.calmarlabs.com

CLC Labs
Westerville, OH, 4308
Tel: 614-888-1663
Fax: 614-888-1330
clclabs@aol.com

Logan Labs, LLC
Lakeview, OH, 43331-0326
Tel: 937-842-6100
Fax: 937-842-2433
http://www.loganlabs.com

Spectrum Analytic
Washington Court House, OH, 43160
Tel: 740-335-1562
Fax: 740-335-1104
http://www.spectrumanalytic.com

Star Lab - OARDC/OSU
Wooster, OH, 44691
Tel: 330-263-3683
Fax: 330-263-3658
jewell.4@osu.edu

Plant Tissue Testing Laboratories Participating in the North American Proficiency Testing Program (NAPT, Coordinated by the American Society of Agronomy)

Indiana

A&L Great Lakes Laboratory
Fort Wayne, IN, 46808-4414
Tel: 260-483-4759
Fax: 260-483-5274
http://www.algreatlakes.com

Illinois

Agri-King, Inc.
Fulton, IL, 61252
Tel: 815-589-2525
Fax: 815-589-3800
http://www.agriking.com

SGS North America
Belleville, IL, 62221
Tel: 618-233-0445
Fax: 618-233-7292
http://www.alveylabs.com/

Kentucky

UK Lexington Soils Laboratory
Lexington, KY, 40546-0275
Tel: 859-257-2785
Fax: 859-257-7351
http://soils.rs.uky.edu

Waters Agricultural Lab - Owensboro
Owensboro, KY, 42301
Tel: 270-685-4039
Fax: 270-685-3989
http://www.watersag.com

Ohio

Brookside Labs Inc.
New Knoxville, OH, 45871
Tel: 419-753-2448
Fax: 419-753-2949
http://www.blinc.com

Ohio (cont.)

Spectrum Analytic
Washington Court House, OH, 43160
Tel: 740-335-1562
Fax: 740-335-1104
http://www.spectrumanalytic.com

Star Lab - OARDC/OSU
Wooster, OH, 44691
Tel: 330-263-3683
Fax: 330-263-3658
jewell.4@osu.edu

Manure Testing Laboratories Participating in the Manure Analysis Proficiency Program (MAP, Coordinated by the Minnesota Department of Agriculture)

Indiana

A & L GREAT LAKES LABORATORIES INC
Contact: LOIS PARKER ~ LAB@ALGREATLAKES.COM
3505 CONESTOGA DR, FORT WAYNE, IN 46808-4413
Phone: (260) 483-4759 ~ Fax: (260) 483-5274 ~ Toll Free: (800) 210-1455

LAND O LAKES FARMLAND FEED SURE TECH LABORATORIES
Contact: TRAVIS ROBERTS ~ SURETECHFEEDLAB@LANDOLAKES.COM
2435 KENTUCKY AVE, INDIANAPOLIS, IN 46224
Phone: (317) 243-1502 ~ Fax: (317) 243-1527 ~ Toll Free: (800) 266-7176

Illinois

SGS ALVEY LABORATORY INC DBA SGS
Contact: MARINA PANTU ~ MARINA.PANTU@SGS.COM
1511 EAST MAIN, BELLEVILLE, IL 62220
Mailing Address: PO BOX 175, BELLEVILLE, IL 62222
Phone: (618) 233-0445 ~ Fax: (618) 233-7292

Kentucky

UNIVERSITY OF KENTUCKY
Contact: FRANK SIKORA ~ FSIKORA@UKY.EDU
103 REGULATORY SERVICE BLDG, LEXINGTON, KY 40546
Phone: (859) 257-2785 ~ Fax: (859) 257-7351

WATERS AGRICULTURAL LABORATORIES INC
Contact: ALLEN CHRISTY ~ ALLENCHRISTY@WATERSAG.COM
2101 CALHOUN RD HWY 81, OWENSBORO, KY 42301
Phone: (270) 685-4039 ~ Fax: (270) 685-3989

Ohio

BROOKSIDE LABORATORY INC
Contact: GREG MEYER ~ GREG@BLINC.COM
308 MAIN ST S, NEW KNOXVILLE, OH 45871
Phone: (419) 753-2448 ~ Fax: (419) 753-2949

SPECTRUM ANALYTIC INC
Contact: VERNON PABST ~ VERNON@SPECTRUMANALYTIC.COM
1087 JAMISON RD NW, WASHINGTON COURT HOUSE, OH 43160
Phone: (740) 335-1562 ~ Fax: (740) 335-1104 ~ Toll Free: (800) 321-1562

Plant Tissue Testing Laboratories

Indiana

A&L Great Lakes Laboratory
Fort Wayne, IN, 46808-4414
Tel: 260-483-4759
Fax: 260-483-5274
http://www.algreatlakes.com

Illinois

Agri-King, Inc.
Fulton, IL, 61252
Tel: 815-589-2525
Fax: 815-589-3800
http://www.agriking.com

SGS North America
Belleville, IL, 62221
Tel: 618-233-0445
Fax: 618-233-7292
http://www.alveylabs.com/

Kentucky

UK Lexington Soils Laboratory
Lexington, KY, 40546-0275
Tel: 859-257-2785
Fax: 859-257-7351
http://soils.rs.uky.edu

Waters Agricultural Lab - Owensboro
Owensboro, KY, 42301
Tel: 270-685-4039
Fax: 270-685-3989
http://www.watersag.com

Ohio

Brookside Labs Inc.
New Knoxville, OH, 45871
Tel: 419-753-2448
Fax: 419-753-2949
http://www.blinc.com

Spectrum Analytic
Washington Court House, OH, 43160
Tel: 740-335-1562
Fax: 740-335-1104
http://www.spectrumanalytic.com

Star Lab - OARDC/OSU
Wooster, OH, 44691
Tel: 330-263-3683
Fax: 330-263-3658
jewell.4@osu.edu

III. Natural Resource Conservation Service Field Office Technical Guide Reference

The information in this appendix comes from this NRCS website:
http://www.nrcs.usda.gov/wps/portal/nrcs/main/national/technical/fotg

Use this link to access the NRCS FOTG web application directly:
http://efotg.nrcs.usda.gov/efotg_locator.aspx

Field Office Technical Guide (FOTG)

What is FOTG?

Technical guides are the primary scientific references for NRCS. They contain technical information about the conservation of soil, water, air, and related plant and animal resources.

Technical guides used in each field office are localized so that they apply specifically to the geographic area for which they are prepared. These documents are referred to as Field Office Technical Guides (FOTGs).

Appropriate parts of the Field Office Technical Guides are automated as data bases, computer programs, and other electronic-based materials such as those included in these web based pages.

What information is located in FOTG

Section I — General References

In this section you will find general state maps, descriptions of Major Land Resource Areas, watershed information, and links to NRCS reference manuals and handbooks. Section I contains links to researchers, universities, and agencies we work. Section I also contains conservation practice costs, agricultural laws and regulations, cultural resources, and information about protected plant and animal species.

Section II — Soil and Site Information

In this section you will find detailed information about soil, water, air, plant, and animal resources. NRCS Soil Surveys, Hydric Soils Interpretations, Ecological Site Descriptions, Forage Suitability Groups, Cropland Production Tables, Wildlife Habitat Evaluation Guides, Water Quality Guides, and other related information can be found here as it becomes available.

Section III — Conservation Management Systems

In this section you will find information on NRCS Quality Criteria, which establish standards for resource conditions that help provide sustained use.

Section IV — Practice Standards and Specifications

In this section you will find the NRCS Conservation Practices. Practice Standards define the practice and where it applies. Practice specifications are detailed requirements for installing the practice in the state.

Section V — Conservation Effects

In this section you will find background information on how Conservation Practices affect each identified resource concerns in the state.

Last Modified: 05/26/2011

Use this link to access the NRCS FOTG web application directly:

http://efotg.nrcs.usda.gov/efotg_locator.aspx

IV. Purdue Publication AY 278 "Estimating Manure Spreading Capacity"

The information in this appendix comes from this Purdue CES website: http://www.extension.purdue.edu/extmedia/AY/AY-278.html

Agronomy Guide

Purdue University Cooperative Extension Service

AY-278

Soils
Purdue University
Cooperative Extension Service
West Lafayette, IN 47907

Estimating Manure Spreader Capacity

Brad C. Joern and Sarah L. Brichford
Department of Agronomy

Good manure management is an essential skill for today's livestock producer. Proper storage, handling, and land application of manure is necessary to utilize manure nutrients for crop production and avoid problems with environmental contamination. Developing a strategy for land application of manure begins with knowing the amount of manure contained in a spreader load. With this information and a laboratory analysis of your livestock manure, you can calculate the application rate of both the manure and the manure nutrients (N, P, and K) on a per acre basis. This publication describes how to estimate the capacity of three types of manure spreaders: liquid tank, V-bottom, and box. A separate publication, AY- 277, contains instructions for obtaining a manure sample and worksheets for calculating manure application rates after you have estimated manure spreader capacity.

AY-277

Estimating manure spreader capacity is a simple procedure. Your owner's manual should provide information regarding the size or capacity of the spreader. If this information is not available, use the following formulas to calculate capacity. Simply make the necessary measurements for your spreader type and use these values in the formula given.

V-bottom Type

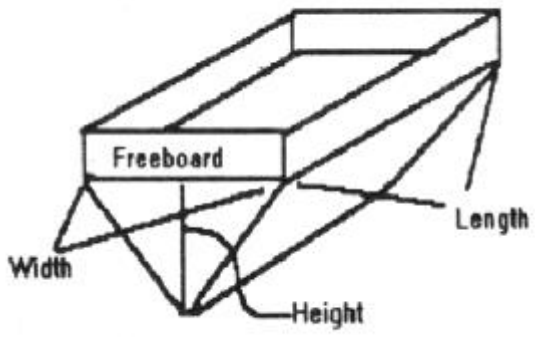

V-bottom spreaders can hold either semi-solid (gallons) or solid manure (tons). If you do not have the capacity of your spreader, you will have to make three measurements.

1. Measure the length and width (in feet) of the manure spreader box. Then, measure the height from the bottom of the spreader box to the top of the manure load.

2. Insert these values into the following formula:

Length (ft.) x Width (ft.) x Height (ft.) x 0.016 = Capacity in tons

Length (ft.) x Width (ft.) x Height (ft.) x 3.75= Capacity in gallons

Your spreader:

Solid _____ (ft.) x _____ (ft.) x _____ (ft.) x 0.016 = _____ tons

Liquid _____ (ft.) x _____ (ft.) x _____ (ft.) x 3.75 = _____ gallons

Liquid Tank Type

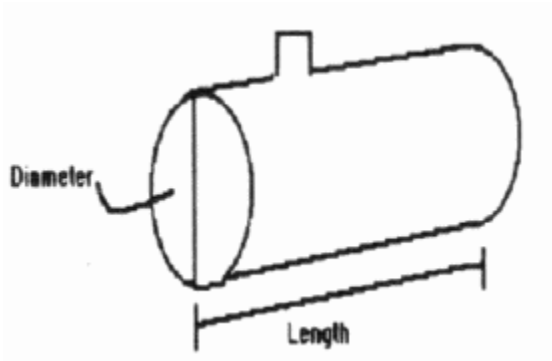

The capacity of a liquid tank spreader is the easiest to calculate. The capacity is often painted on the side of the tank. If capacity information is not available, use the following steps to calculate the capacity (in gallons) of your spreader.

1. Measure the length and diameter of the tank (in feet) as shown in the diagram.

2. Insert these values into the following formula:

[Diameter (ft.) / 2] ^{2} *x Length (ft.) x 23.6 = Capacity in gallons*

Your spreader: [ft / 2]^2 x _____ ft. x 23.6 = _____ gallons

Box Type

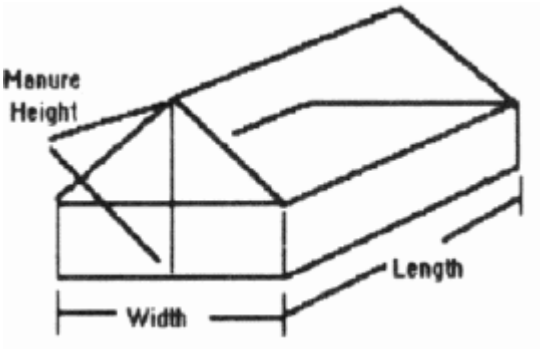

The capacity of a box spreader is difficult to estimate accurately because the density of solid manure is quite variable. Density is the weight of the manure per volume of manure (e.g., lb./ft. ^{3}). Manure density varies depending on the amount of bedding used. Therefore, if you estimate spreader capacity as only the volume of manure the spreader holds you are overlooking the fact that some manure weighs more than other manure. This can cause a significant error when calculating manure application rates.

To account for the variability in manure density, we recommend weighing five, full spreader loads and then calculating the average weight of a full spreader. This is the preferred method and will give you a reasonable estimate of spreader capacity.

1. Weigh five different spreader loads, using drive-on scales or portable truck scales,* and calculate the average weight. Remember, one ton equals 2000 pounds.

Load 1 _____ + Load 2 _____ + Load 3 _____ + Load 4 _____ + Load 5 _____ = Total Weight (tons)

Total Weight _____ / 5 = Average Loaded Weight _____ tons

2. Weigh the spreader when it is empty, and subtract this value from the average loaded weight. The resulting value is the manure holding capacity.

Average Loaded Weight _____ - Empty Spreader Weight _____ = _____ tons

*If you do not have access to scales you can calculate spreader volume by measuring three dimensions of the spreader. Keep in mind that this method is much less accurate than weighing.

1. Measure the length and width of the manure spreader box (in feet) as shown in the diagram.

2. Fill the spreader and measure the distance from the bottom of the box to the top of the manure load. This is the manure height. Take five measurements and use the average value in the formula.

3. Insert these values into the following formula:

Length (ft.) x Width (ft.) x Manure Height (ft.) x 0.025 = Capacity in tons

Your spreader: _____ ft. x _____ ft. x _____ ft. x 0.025 = _____ tons

---

New 9/93

Editor: Cheri Janssen, Department of Agronomy

Cooperative Extension work in Agriculture and Home Economics, state of Indiana, Purdue University, and U.S. Department of Agriculture cooperating; H. A. Wadsworth, Director, West Lafayette, IN. Issued in furtherance of the acts of May 8 and June 30, 1914. The Cooperative Extension Service of Purdue University is an affirmative action/equal opportunity institution.

V. Purdue Publication AY 277 "Calculating Manure and Manure Nutrient Application Rates"

The information in this appendix comes from this Purdue CES website: http://www.extension.purdue.edu/extmedia/AY/AY-277.html

Agronomy Guide

Purdue University Cooperative Extension Service

AY-277

Soils

Purdue University

Cooperative Extension Service

West Lafayette, IN 47907

Calculating Manure and Manure Nutrient Application Rates

Brad C. Joern and Sarah L. Brichford
Department of Agronomy, Purdue University

Did you know that livestock excrete 70-80% of the nitrogen, 60-85% of the phosphorus, and 80-90% of the potassium fed to them? For example, if you feed 100 acres of corn to your livestock and collect all of the manure, there may be enough phosphorus and potassium to fertilize 75 acres (depending on your soil test phosphorus and potassium levels). Although the availability of manure nitrogen depends on several uncontrollable factors, the availability of manure phosphorus and potassium do not. **Most of the fertilizer value of manure comes from phosphorus and potassium, not nitrogen**.

This bulletin will help you begin to manage manure as a crop nutrient resource, not a waste product.

The first step in treating animal manure as a crop fertilizer is to determine its nutrient content. Once the manure nutrient content has been established, you can calculate the proper application rate based on your management objectives, crop yield potential, and soil test values for the field(s) that will receive manure.

Determining Manure Nutrient Content

A spreader load of manure with an unknown nutrient content is like an unmarked bag or sprayer tank of fertilizer. You must first determine the nutrient content before the proper application rate can be calculated. Unlike inorganic fertilizer, manure is not a uniform product. This makes obtaining a representative manure sample very important.

Collecting a manure sample

Taking a manure sample at the time of spreading increases your chances of obtaining a representative sample. Collect samples while the storage pit is being mixed. Take samples from several spreader loads while emptying the pit and mix them together to form one composite sample. **Do not enter a pit to collect the manure sample.** Dangerous gases are present near the pit surface.

If the pit is not mixed prior to loading the spreader, consider collecting separate composite samples while the pit is being emptied. Record the depth (top third, middle third, bottom third, etc.) where the samples were taken for future reference. In pits that are not mixed, manure solids, which contain most of the phosphorus, tend to settle to the bottom.

For solid manure (daily scrape and haul, manure stack, etc.) take samples from several spreader loads and combine to form one composite sample for analysis. If you apply manure throughout the year, you may want to take samples several times during the year to see if the manure nutrient content changes.

To prepare a manure sample for shipping, fill a plastic container (approximately one quart) 2/3 full with manure, squeeze out the air in the upper third of the container (to allow for gas expansion), and seal tightly for shipping. Ship samples early in the week to avoid having them sit over the weekend. Freezing or refrigerating the samples prior to shipping helps preserve the samples during transport. **Do not place manure samples in glass containers**. Gas expansion creates pressure that can cause glass containers to explode. Many laboratories supply containers and/or detailed instructions on how to prepare and ship samples. Contact the laboratory for further information.

Obtaining a nutrient analysis

As a minimum, have manure analyzed for percent solids, total nitrogen, ammonium nitrogen (NH_4^+-N), phosphate (P_2O_5) and potash (K_2O). Once a baseline of manure nutrient information has been established, you probably only need to send in one or two samples per year. Have additional samples analyzed if you make significant changes in livestock feeding, watering, or housing.

With this sampling method you may be done spreading before you receive the laboratory manure nutrient analysis report. You can still credit the nutrients in manure applied after you get the test results if you know the manure application rate.

Table 1. Nutrients in solid manure at the time of land application.*

Species	Bedding or litter	Dry matter (%)	NH_4^+N	Total N	P_2O_5	K_2O
			-- lb./ton manure--			
Swine	no	18	6	10	9	3
	yes	18	5	8	7	7
Beef	no	15[1]	4	11	7	10
	no	52[2]	7	21	14	23
	yes	50	8	21	18	26
Dairy	no	18	4	9	4	10
	yes	21	5	9	4	10
Sheep	no	28	5	18	11	26
	yes	28	5	14	9	25
Poultry	no	45	26	33	48	34
	yes	75	36	56	45	34
	deep pit	76	44	68	64	45
Turkey	no	22	17	27	20	17
	yes	29	13	20	16	13
Horse	yes	46	4	14	4	14

1 Open concrete lot
2 Open dirt lot

Table 2. Nutrients in liquid manure at the time of land application.*

Species	Waste handling	Dry matter (%)	NH_4^+N	Total N	P_2O_5	K_2O
			---lb./1000 gal. manure---			
Swine	liquid pit	4	26	36	27	22
	lagoon[1]	1	3	4	2	4
Beef	liquid pit	11	24	40	27	34
	lagoon[1]	1	2	4	9	5
Dairy	liquid pit	8	12	24	18	29
	lagoon[1]	1	2.5	4	4	5
Veal calf	liquid pit	3	19	24	25	51
Poultry	liquid pit	13	64	80	36	96

1 Includes lot runoff

In addition to laboratory analysis, portable test kits can measure plant available manure nitrogen at the time of application. These manure test kits give a reasonable estimate of plant available nitrogen in approximately five minutes and can be used as a supplement to the laboratory analysis. If you apply manure based on nitrogen, you can use the test kit results to calculate manure nitrogen application rates. The laboratory analysis can

then be used to determine phosphate and potash credits, as well as fine-tune nitrogen credits. Contact your local cooperative Extension office about the availability of manure test kits in your area.

Table 3. Amount of nitrogen mineralized or released from organic nitrogen forms in manure to plant available forms during the growing season.*

Manure type	Manure handling	Mineralization factor
Swine	Fresh	0.50
	Anaerobic liquid	0.35
	Aerobic liquid	0.30
Beef	Solid without bedding	0.35
	Solid with bedding	0.25
	Anaerobic liquid	0.30
	Aerobic liquid	0.25
Dairy	Solid without bedding	0.35
	Solid with bedding	0.25
	Anaerobic liquid	0.30
	Aerobic liquid	0.25
Sheep	Solid	0.25
Poultry	Deep pit	0.45
	Solid with litter	0.30
	Solid without litter	0.35
Horse	Solid with bedding	0.20

* Source: MWPS-18 (Midwest Planning Service) Livestock Waste Facilities Handbook

Interpreting your laboratory analysis

Enter your manure analysis values in the table below. Use the worksheet to estimate the plant available nitrogen (PAN) in the manure. Manure type is the species and form (solid or liquid). If you have liquid manure your values should be in lb./1 000 gal. If you have solid manure your values should be in lb./ton. Tables 1 and 2 provide average nutrient values for various animal species and manure storage systems. These tables show how storage structure and livestock species can affect the nutrient content of manure, but the table values are **not** meant as a replacement for your laboratory manure nutrient analysis.

Manure Type	Dry Matter %	Total N	Ammonium N (NH_4^+-N)	PAN	P_2O_5	K_2O
		lb./1000 gal. or ton				

Phosphorus and Potassium

Practically all of the phosphate (P_2O_5) and potash (K_2O) applied in manure is available to the crop the first year. Use your P_2O_5 and K_2O values from the laboratory manure nutrient analysis for all calculations requiring phosphate and potash.

Nitrogen

1. The amount of nitrogen available the first year (or plant available nitrogen, PAN) is a combination of all the ammonium-nitrogen (NH_4^+-N) plus that portion of the organic nitrogen that will mineralize and become available to the crop during the growing season.

To calculate PAN, start by subtracting the NH_4^+-N value from the Total Nitrogen value as follows.

```
Formula:     Total N  -    NH4+-N = Organic N

Your values: _____  - _____ Organic N*
```

2. The amount of organic nitrogen that will mineralize during the first year is the organic N calculated in step 1 multiplied by a mineralization factor. Refer to Table 3 to obtain the mineralization factor that matches your livestock operation.

```
Formula: Organic N (from step 1) x Mineralization Factor = Organic N Available First Year

Your values: _____ Organic N (lb./1000 gal. or lb./ton) x _____ =

             _____ Organic N available first year (lb./1000 gal. or lb./ton)
```

3. Finally, to calculate PAN, add the ammonium-nitrogen (NH_4^+-N) obtained in your manure analysis to the organic N available the first year, from step 2.

```
Formula:    NH4+-N + Organic Available First Year = PAN (lb. /1000 gal. or lb./ton)

Your values:   ______ (lb./1000 gal. or lb./ton) + _____ (lb. /1000 gal. or lb/ton)

             = ______ PAN (lb./1000 gal. or lb./ton)
```

Write your PAN value in the manure analysis table at the top of the page.

** lb./1000 gal. for liquid manure; lb./ton for solid manure*

Calculating Application Rates

Whether you want to match manure application rates with the nutrient requirements of a certain crop and yield goal or always apply a specific rate of manure, you need to calibrate your spreader. This is a simple process requiring a few measurements and

calculations. The following instructions apply to the worksheets that follow; you can use them to calculate application rates for your liquid or solid manure spreader.

Start by determining the amount of manure your spreader holds. The owner's manual should provide information on the size or capacity of your spreader. If you do not have this information, AY-278 "Estimating Manure Spreader Capacity," explains how to calculate the capacity of both liquid and solid manure spreaders. Enter your spreader capacity in the space provided at **step 1** in the appropriate worksheet.

AY-278

Next (**step 2**) estimate the nutrient content of a full manure spreader. If you assign a dollar value for each nutrient, you can get a rough estimate of the economic value of a spreader load of manure. This information can help determine the distance you can afford to haul the manure.

In **step 3**, calculate the actual manure application rate in tons or thousands of gallons per acre. For this step you need to know the width of spread and the distance traveled to empty the spreader.

The final step (**step 4**) is to determine the pounds of manure nutrients applied per acre. This is simply the manure nutrient content (from the laboratory analysis table) multiplied by the manure application rate (step 3). You can make spreader adjustments or change tractor speed to modify the manure application rate to match crop nutrient needs.

Other Considerations

Obtaining a uniform manure application can be a challenge, especially with solid manure spreaders. Adjusting tractor speed and overlapping the outside edges helps to apply solid manure evenly. Incorporating surface applied manure also distributes the manure and minimizes nitrogen volatilization. When injecting manure, keep the knives clear and unplugged.

The amount of PAN (plant available nitrogen) that will actually be available to your crop is affected by application method and timing relative to crop growth. Uncontrollable environmental factors, like temperature and rainfall, also influence the availability of nitrogen. Nitrogen can be lost by leaching below the crop root zone and as a gas through a process called denitrification. The uncertain availability of manure nitrogen has led many producers to ignore the potential nutrient credits from manure applications.

Application method or time does not significantly influence phosphorus and potassium availability, making these nutrients available to crops as they are applied. Phosphate and potash attach to soil particles and generally move very little in soil; however, these nutrients can be lost with eroded soil in runoff. Preventing soil erosion helps retain all crop nutrients and protect surface water quality.

Table 4 lists short-term nitrogen-loss estimates based on the method of manure application. Generally, the availability of manure nitrogen decreases as the time between manure application and crop nitrogen uptake increases. Most of the potentially available manure nitrogen may be lost from summer or early fall applications (before soil

temperature at a depth of four inches drops below 50 F), particularly with surface applied manure.

A relatively new product, the pre-sidedress nitrate soil test, can help in determining the need for additional nitrogen fertilizer in fields that have received manure. The test is most useful when manure has been broadcast (whether incorporated or not) or in fields with a long history of manure applications. Your local cooperative Extension office has information about the pre-sidedress nitrate test. **Note: manure applications based on nitrogen alone usually result in excess phosphorus and potassium In the soil. Test soils regularly to avoid excessive phosphorus and potassium build-up.**

Table 4. Nitrogen loss as ammonia within four days after land application.*

Application method	Type of waste	Nitrogen lost (%)
Broadcast	solid	15-30
	liquid	10-25
Broadcast with immediate cultivation	solid	1-5
	liquid	1-5
Knifing	liquid	0-2
Sprinkler irrigation	liquid	15-35

* Source: MWPS-18 (Midwest Planning Service) Livestock Waste Facilities Handbook

Nutrient application rate--Liquid manure

1. Spreader Factor: Liquid manure spreaders must divide spreader capacity by 1000.

```
Formula:
 Value from Spreader Capacity AY-278: _____ gallons / 1000 = Liquid Spreader Factor

Your values:
 Value from Spreader Capacity AY-278: _____ gallons / 1000 = _____ Liquid Spreader Factor
```

2. Manure Nutrients per Spreader Load:

Formula:
Plant Available Manure Nutrients x Liquid Spreader Factor (listed above)
= Nutrients per Spreader Load

Your values: (from Laboratory Analysis table)

_____ lb. N (PAN) per 1000 gal.x _____ (Liquid Spreader Factor) = _____ lb. PAN per load

_____ lb. P_20_5 per 1000 gal. x _____ (Liquid Spreader Factor) = _____ lb. P_20_5 per load

_____ lb. K_20 per 1000 gal. x _____ (Liquid Spreader Factor) = _____ lb. K_2O per load

3. Manure Application Rate:

Formula:

$$\frac{\text{Liquid Spreader Factor x 43.560 ft.}^2\text{/acre}}{\text{Width of Spread (ft.) x Distance Traveled (ft)}} = \text{Thousand gal. manure applied / acre}$$

Your values:

$$\frac{\text{x 43,560 ft.}^2\text{/acre}}{\text{_____ width (ft.) x ____ distance (ft.)}} = \text{_____ Thousand gal. manure applied / acre}$$

4. Manure Nutrient Application Rate: The manure nutrient application rate is simply the manure nutrients per 1000 gallons multiplied by the manure application rate from step 3.

Formula:
Nutrient lb. per 1000 gal. x Thousand gal applied/acre = Nutrient lb./acre

Your values:

_____ N (PAN) lb. per 1000 gal. x _____ thousand gal. applied / acre = _____ lb. / acre

_____ P_2O_5 lb. per 1000 gal. x _____ thousand gal. applied / acre = _____ lb. / acre

_____ K_2O lb. per 1000 gal. x _____ thousand gal. applied / acre = _____ lb. / acre

Nutrient application rate--Solid manure

1. Spreader Capacity:

Your value (from owner's manual or Spreader Capacity AY-278): _____ tons of manure

2. Manure Nutrients per Spreader Load:

```
Formula:
   Plant Available Manure Nutrients x Spreader Capacity = Nutrients per Spreader Load

Your values: (from Laboratory Analysis table, page 3)

         _____ lb. N (PAN) per ton x _____ tons = _____ lb. PAN per load

         _____ lb. P2O5 per ton    x _____ tons = _____ lb. P2O5 per load

         _____ lb. K2O per ton     x _____ tons = _____ lb. K2O per load
```

3. Manure Application Rate:

```
    Formula:
         Spreader Capacity (tons) x 43,560 ft.2/acre    = Tons manure applied/acre
         ----------------------------------------------
         Width of Spread (ft.) x Distance Traveled (ft.)


     Your values:
                tons x 43.560 ft.2 /acre  = ______ Tons manure applied / acre
          -------------------------------
           ____ width (ft.) x ____ distance (ft.)
```

4. Manure Nutrient Application Rate: The manure nutrient application rate is simply the manure nutrients per spreader load multiplied by the manure application rate from step 3.

```
Formula:

  _____ Nutrient lb. per ton x ____ Tons applied / acre = ______ Nutrient lb. / acre


Your values:

  _____ N (PAN) lb. per ton x _____ tons applied / acre = ______ lb. / acre

  _____ P2O5 lb. per ton  x _____ tons applied / acre = ______ lb. / acre

  _____ K20 lb. per ton   x _____ tons applied / acre = ______ lb. / acre
```

New 8/93

Editor: Cheri Janssen, Department of Agronomy

Cooperative Extension work in Agriculture and Home Economics, state of Indiana, Purdue University, and U.S. Department of Agriculture cooperating; H.A. Wadsworth, Director, West Lafayette, IN. Issued in furtherance of the acts of May 8 and June 30, 1914. The Cooperative Extension Service of Purdue University is an affirmative action/equal opportunity institution.

VI. Indiana's Confined Feeding Control Law

http://iga.in.gov/legislative/laws/2015/ic/titles/013/articles/018/chapters/010/

IC 13-18-10
Chapter 10. Confined Feeding Control
IC 13-18-10-1
Department approval necessary for confined feeding operations

Sec. 1. (a) A person may not start:
(1) construction of a confined feeding operation; or
(2) expansion of a confined feeding operation that increases:
(A) animal capacity; or
(B) manure containment capacity; or
(C) both;
without obtaining the prior approval of the department.

(b) A person may not operate a confined feeding operation without obtaining the prior approval of the department.

As added by P.L.1-1996, SEC.8. Amended by P.L.24-2004, SEC.3; P.L.81-2009, SEC.2; P.L.127-2009, SEC.5; P.L.1-2010, SEC.62; P.L.199-2014, SEC.1.

IC 13-18-10-1.4
Disclosure statement for confined feeding operation application

Sec. 1.4. (a) Subject to subsection (b), an application for approval under section 1 of this chapter must include for each responsible party the disclosure statement referred to in subsection (c) if either or both of the following apply:
(1) State or federal officials at any time alleged that the responsible party committed acts or omissions that constituted a material violation of state or federal environmental law.
(2) Foreign officials at any time alleged that the responsible party committed acts or omissions that:
(A) constituted a material violation of foreign environmental law; and
(B) would have constituted a material violation of state or federal environmental law if the act or omission had occurred in the United States.

(b) Subsection (a):
(1) applies only if the acts or omissions alleged under subsection (a)(1) or (a)(2) presented a substantial endangerment to human health or the environment; and
(2) does not apply to a renewal of an approval under section 1 of this chapter that does not involve construction or expansion as described in section 1 of this chapter.

(c) A responsible party referred to in subsection (a) must make reasonable efforts to provide complete and accurate information to the department in a disclosure statement that includes the following:
(1) The name and business address of the responsible party.
(2) A description of the responsible party's experience in managing the environmental aspects of the type of facility that will be managed under the permit.
(3) A description of all pending administrative, civil, or criminal enforcement actions filed in the United States against the responsible party alleging any acts or omissions that:

(A) constitute a material violation of state or federal environmental law; and
(B) present a substantial endangerment to human health or the environment.
(4) A description of all pending administrative, civil, or criminal enforcement actions filed in a foreign country against the responsible party alleging any acts or omissions that:
(A) constitute a material violation of foreign environmental law;
(B) would have constituted a material violation of state or federal environmental law if the act or omission on which the action is based had occurred in the United States; and
(C) present a substantial endangerment to human health or the environment.
(5) A description of all finally adjudicated or settled administrative, civil, or criminal enforcement actions in the United States resolved against the responsible party within the five (5) years that immediately precede the date of the application involving acts or omissions that:
(A) constitute a material violation of federal or state environmental law; and
(B) present a substantial endangerment to human health or the environment.
(6) A description of all finally adjudicated or settled administrative, civil, or criminal enforcement actions in a foreign country resolved against the responsible party within the five (5) years that immediately precede the date of the application involving acts or omissions that:
(A) constitute a material violation of foreign environmental law;
(B) would have constituted a material violation of state or federal environmental law if the act or omission on which the action is based had occurred in the United States; and
(C) present a substantial endangerment to human health or the environment.
(7) Identification of all state, federal, or foreign environmental permits:
(A) applied for by the responsible party that were denied; or
(B) previously held by the responsible party that were revoked.
(d) A disclosure statement submitted under subsection (c):
(1) must be executed under oath or affirmation; and
(2) is subject to the penalty for perjury under IC 35-44.1-2-1.
(e) The department may investigate and verify the information set forth in a disclosure statement submitted under this section.
As added by P.L.127-2009, SEC.6. Amended by P.L.126-2012, SEC.32.

IC 13-18-10-1.9
Application of the law to certain confined feeding operations
Sec. 1.9. (a) This section applies:
(1) to a confined feeding operation for which a person is required to submit an application for approval under section 1 of this chapter if an application for approval under section 1 of this chapter submitted with respect to the confined feeding operation was not approved by the department before May 12, 2009; and

(2) notwithstanding the effective date of the addition or amendment by P.L.127-2009 of the provisions listed in subsection (b)(1) through (b)(8).

(b) The following, as added or amended by P.L.127-2009, effective July 1, 2009, apply to a confined feeding operation described in subsection (a)(1) in the same manner as if they had been in effect on the date on which the application was submitted with respect to the confined feeding operation under section 1 of this chapter:

(1) IC 13-11-2-8.
(2) IC 13-11-2-40.
(3) IC 13-11-2-191.
(4) Section 1 of this chapter.
(5) Section 2 of this chapter.
(6) Section 2.1 of this chapter.
(7) Section 2.2 of this chapter.
(8) Section 4 of this chapter.

As added by P.L.1-2010, SEC.63.

IC 13-18-10-2
Application for approval; notice requirements; renewal of approval; approval of manure management system

Sec. 2. (a) An application for an approval under section 1 of this chapter must be submitted on a form provided by the department. An applicant must submit the completed application form to the department together with the following:

(1) Plans and specifications for the design and operation of manure treatment and control facilities.
(2) A manure management plan that outlines procedures for the following:
    (A) Soil testing.
    (B) Manure testing.
(3) Maps of manure application areas.
(4) Supplemental information that the department requires, including the following:
    (A) General features of topography.
    (B) Soil types.
    (C) Drainage course.
    (D) Identification of nearest streams, ditches, and lakes.
    (E) Location of field tiles.
    (F) Location of land application areas.
    (G) Location of manure treatment facilities.
    (H) Farmstead plan, including the location of water wells on the site.
(5) A fee of one hundred dollars ($100). The department shall refund the fee if the department does not make a determination in accordance with the time period established under section 2.1 of this chapter.

(b) An applicant who applies for an approval under section 1 of this chapter shall, not more than ten (10) working days after submitting the application, make a reasonable effort to provide notice under this subsection:

(1) to the county executive of the county in which the confined feeding operation is to be located or expanded; and
(2) to each owner and each occupant of land of which any part of the boundary is one-half mile or less from the following:

(A) Any part of the proposed footprint of either or both of the following to be located on the land on which the confined feeding operation is to be located:
(i) A livestock or poultry production structure.
(ii) A permanent manure storage facility.
(B) Any part of the proposed footprint of either or both of the following to be located on the land on which the confined feeding operation is to be expanded:
(i) A livestock or poultry production structure.
(ii) The expanded area of a livestock or poultry production structure.

The notice must be sent by mail, be in writing, include the date on which the application was submitted to the department, and include a brief description of the subject of the application. The applicant shall pay the cost of complying with this subsection. The applicant shall submit an affidavit to the department that certifies that the applicant has complied with this subsection.

(c) A person must submit an application for the renewal of an approval to:
(1) operate a confined feeding operation; or
(2) complete construction or expansion of a confined feeding operation;

at least thirty (30) days prior to the expiration of the existing approval. The construction standards that apply to a renewal application under this subsection shall be the standards in place under rules adopted by the board at the time that the original approval for construction or expansion of a confined feeding operation was issued.

(d) A person who has received approval to construct or expand a confined feeding operation under section 1 of this chapter and has not begun construction or expansion within thirty (30) days of the expiration of the approval must:
(1) submit a renewal application for construction or expansion at least thirty (30) days prior to the expiration of the approval; and
(2) comply with the requirements of subsection (b).

The construction standards that apply to a renewal application under this subsection shall be the standards in place under rules adopted by the board at the time that the renewal application is submitted.

(e) The department shall approve the construction or expansion and the operation of the manure management system of the confined feeding operation if the commissioner determines that the applicant meets the requirements of:
(1) this chapter;
(2) rules adopted under this chapter;
(3) the water pollution control laws;
(4) rules adopted under the water pollution control laws; and
(5) policies and statements adopted under IC 13-14-1-11.5 relative to confined feeding operations.

As added by P.L.1-1996, SEC.8. Amended by P.L.125-1997, SEC.4; P.L.127-2009, SEC.7; P.L.199-2014, SEC.2.

IC 13-18-10-2.1
Approval procedure; requirements; denial or revocation of approval

Sec. 2.1. (a) The department:
(1) shall make a determination on an application submitted under section 2 of this chapter not later than ninety (90) days

after the date the department receives the completed application, including all required supplemental information, unless the department and the applicant agree to a longer time; and
(2) may conduct any inquiry or investigation, consistent with the department's duties under this chapter, the department considers necessary before making a determination.

(b) If the department fails to make a determination on an application not later than ninety (90) days after the date the department receives the completed application, the applicant may request and receive a refund of an approval application fee paid by the applicant, and the commissioner shall:
(1) continue to review the application;
(2) approve or deny the application as soon as practicable; and
(3) refund the applicant's application fee not later than twenty-five (25) working days after the receipt of the applicant's request.

(c) The commissioner may suspend the processing of an application and the ninety (90) day period described under this section if the department determines within thirty (30) days after the department receives the application that the application is incomplete and has mailed a notice of deficiency to the applicant that specifies the parts of the application that:
(1) do not contain adequate information for the department to process the application; or
(2) are not consistent with applicable law.

(d) The department may establish requirements in an approval regarding that part of the confined feeding operation that concerns manure handling and application to assure compliance with:
(1) this chapter;
(2) rules adopted under this chapter;
(3) the water pollution control laws;
(4) rules adopted under the water pollution control laws; and
(5) policies and statements adopted under IC 13-14-1-11.5 relative to confined feeding operations.

(e) Subject to subsection (f), the commissioner may deny an application upon making either or both of the following findings:
(1) A responsible party intentionally misrepresented or concealed any material fact in either or both of the following:
(A) An application for approval under section 1 of this chapter.
(B) A disclosure statement required by section 1.4 of this chapter.
(2) An enforcement action was resolved against a responsible party as described in either or both of the following:
(A) Section 1.4(c)(5) of this chapter.
(B) Section 1.4(c)(6) of this chapter.

(f) Before making a determination to approve or deny an application, the commissioner must consider the following factors:
(1) The nature and details of the acts attributed to the responsible party.
(2) The degree of culpability of the responsible party.
(3) The responsible party's cooperation with the state, federal, or foreign agencies involved in the investigation of the activities involved in actions referred to in section 1.4(c)(5) and 1.4(c)(6) of this chapter.
(4) The responsible party's dissociation from any other persons or entities convicted in a criminal enforcement action referred

to in section 1.4(c)(5) and 1.4(c)(6) of this chapter.
(5) Prior or subsequent self-policing or internal education programs established by the responsible party to prevent acts, omissions, or violations referred to in section 1.4(c)(5) and 1.4(c)(6) of this chapter.

(g) Except as provided in subsection (h), in taking action under subsection (e), the commissioner must make separately stated findings of fact to support the action taken. The findings of fact must:
(1) include a statement of ultimate fact; and
(2) be accompanied by a concise statement of the underlying basic facts of record to support the findings.

(h) If the commissioner denies an application under subsection (e), the commissioner is not required to explain the extent to which any of the factors set forth in subsection (f) influenced the denial.

(i) The department may amend an approval under section 1 of this chapter or revoke an approval under section 1 of this chapter:
(1) for failure to comply with:
(A) this chapter;
(B) rules adopted under this chapter;
(C) the water pollution control laws; or
(D) rules adopted under the water pollution control laws; and
(2) as needed to prevent discharges of manure into the environment that pollute or threaten to pollute the waters of the state.

As added by P.L.125-1997, SEC.5. Amended by P.L.127-2009, SEC.8; P.L.199-2014, SEC.3.

IC 13-18-10-2.2
Affidavit after construction or expansion; approval to construct or expand remains effective as operating approval

Sec. 2.2. (a) Not more than thirty (30) days after the completion of construction or expansion of a confined feeding operation, the applicant shall execute and send to the department an affidavit that affirms under penalties of perjury that the confined feeding operation:
(1) was constructed or expanded; and
(2) will be operated;
in accordance with the requirements of the department's approval.

(b) An approval to construct or expand a confined feeding operation shall remain in effect as the operating approval for the duration of the permit term if construction or expansion is completed prior to the end of the permit term under which the confined feeding operation was constructed or expanded.

As added by P.L.125-1997, SEC.6. Amended by P.L.127-2009, SEC.9; P.L.199-2014, SEC.4.

IC 13-18-10-2.3
Repealed
(Repealed by P.L.199-2014, SEC.5.)

IC 13-18-10-2.6
Compliance and technical assistance program

Sec. 2.6. The department shall establish a compliance and technical assistance program for owners and operators of confined feeding operations that may be administered by:
(1) the department;
(2) a state college or university; or
(3) a contractor.

As added by P.L.125-1997, SEC.8.

IC 13-18-10-3
Enforcement of chapter

Sec. 3. This chapter, including requirements established in a department approval under section 2 of this chapter, may be enforced under IC 13-30-3 or IC 13-14-2-6.

As added by P.L.1-1996, SEC.8. Amended by P.L.125-1997, SEC.9.

IC 13-18-10-4
Rules, policies, and statements; uniform standards

Sec. 4. (a) The board may adopt rules under IC 4-22-2 and IC 13-14-9 and the department may adopt policies or statements under IC 13-14-1-11.5 that are necessary for the proper administration of this chapter. The rules, policies, or statements may concern construction, expansion, and operation of confined feeding operations and may include uniform standards for:

(1) construction, expansion, and manure containment that are appropriate for a specific site; and
(2) manure application and handling that are consistent with best management practices:
(A) designed to reduce the potential for manure to be conveyed off a site by runoff or soil erosion; and
(B) that are appropriate for a specific site.

(b) Standards adopted in a rule, policy, or statement under subsection (a) must:

(1) consider confined feeding standards that are consistent with standards found in publications from:
(A) the United States Department of Agriculture;
(B) the Natural Resources Conservation Service of the United States Department of Agriculture;
(C) the Midwest Plan Service; and
(D) postsecondary educational institution extension bulletins; and
(2) be developed through technical review by the department, postsecondary educational institution specialists, and other animal industry specialists.

As added by P.L.1-1996, SEC.8. Amended by P.L.125-1997, SEC.10; P.L.2-2007, SEC.167; P.L.127-2009, SEC.10.

IC 13-18-10-5
Injunctive relief

Sec. 5. The department may seek injunctive relief under this chapter.

As added by P.L.1-1996, SEC.8. Amended by P.L.125-1997, SEC.11.

IC 13-18-10-6
Violations; penalties

Sec. 6. A person who violates this chapter is subject to the penalties imposed by the following:

(1) IC 13-30-4.
(2) IC 13-30-5.
(3) IC 13-30-8.

In addition, a person who violates this chapter may be subject to criminal prosecution under IC 13-30-10.

As added by P.L.1-1996, SEC.8. Amended by P.L.137-2007, SEC.12.

VII. Definitions that Apply to Indiana's Confined Feeding Control Law

These definitions are in IC 13-11-2, which you can access here: http://www.in.gov/legislative/ic/code/title13/ar11/ch2.html

IC 13-11-2-39
"Confined feeding"

Sec. 39. (a) "Confined feeding", for purposes of IC 13-18-10, means the confined feeding of animals for food, fur, or pleasure purposes in lots, pens, ponds, sheds, or buildings where:

(1) animals are confined, fed, and maintained for at least forty-five (45) days during any twelve (12) month period; and

(2) ground cover or vegetation is not sustained over at least fifty percent (50%) of the animal confinement area.

(b) The term does not include the following:

(1) A livestock market:

(A) where animals are assembled from at least two (2) sources to be publicly auctioned or privately sold on a commission basis; and

(B) that is under state or federal supervision.

(2) A livestock sale barn or auction market where animals are kept for not more than ten (10) days.

As added by P.L.1-1996, SEC.1. Amended by P.L.125-1997, SEC.1.

IC 13-11-2-40
"Confined feeding operation"

Sec. 40. "Confined feeding operation" means:

(1) any confined feeding of:

(A) at least three hundred (300) cattle;

(B) at least six hundred (600) swine or sheep;

(C) at least thirty thousand (30,000) fowl; or

(D) at least five hundred (500) horses.

(2) any animal feeding operation electing to be subject to IC 13-18-10; or

(3) any animal feeding operation that is causing a violation of:

(A) water pollution control laws;

(B) any rules of the water pollution control board; or

(C) IC 13-18-10.

A determination by the department under this subdivision is appealable under IC 4-21.5.

As added by P.L.1-1996, SEC.1. Amended by P.L.125-1997, SEC.2; P.L.81-2009, SEC.1; P.L.127-2009, SEC.2; P.L.189-2011, SEC.4.

IC 13-11-2-40.8
"Construction"

Sec. 40.8. "Construction", for purposes of IC 13-18-10, means the fabrication, erection, or installation of a facility or manure control equipment at the location where the facility or manure control equipment is intended to be used. The term does not include the following:

(1) The dismantling of existing equipment and control devices.
(2) The ordering of equipment and control devices.
(3) Offsite fabrication.
(4) Site preparation.

As added by P.L.125-1997, SEC.3.

IC 13-11-2-148
"Operator"

Sec. 148. (a) "Operator", for purposes of IC 13-18-10, means the person in direct or responsible charge or control of one (1) or more confined feeding operations.

(b) "Operator", for purposes of IC 13-18-11 and environmental management laws, means the person in direct or responsible charge and supervising the operation of:

(1) a water treatment plant;
(2) a wastewater treatment plant; or
(3) a water distribution system.

(c) "Operator", for purposes of IC 13-20-6, means a corporation, a limited liability company, a partnership, a business association, a unit, or an individual who is a sole proprietor that is one (1) of the following:

(1) A broker.
(2) A person who manages the activities of a transfer station that receives municipal waste.
(3) A transporter.

(d) "Operator", for purposes of IC 13-23, except as provided in subsections (e), (g), and (h), means a person:

(1) in control of; or
(2) having responsibility for;

the daily operation of an underground storage tank.

(e) "Operator", for purposes of IC 13-23-13, does not include the following:

(1) A person who:
(A) does not participate in the management of an underground storage tank;
(B) is otherwise not engaged in the:
(i) production;
(ii) refining; and
(iii) marketing;
of regulated substances; and
(C) holds evidence of ownership, primarily to protect the owner's security interest in the tank.

(2) A person that is a lender that did not participate in management of an underground storage tank before foreclosure, notwithstanding that the person:
(A) forecloses on the vessel or facility; and
(B) after foreclosure, sells, re-leases (in the case of a lease finance transaction), or liquidates the underground storage tank, maintains business activities, winds up

operations, undertakes a response action under Section 107(d)(1) of CERCLA (42 U.S.C. 9607(d)(1)) or under the direction of an on-scene coordinator appointed under the National Contingency Plan with respect to the underground storage tank, or takes any other measure to preserve, protect, or prepare the underground storage tank prior to sale or disposition;

if the person seeks to sell, re-lease (in the case of a lease finance transaction), or otherwise divest the person of the underground storage tank at the earliest practicable, commercially reasonable time, on commercially reasonable terms, taking into account market conditions and legal and regulatory requirements.

(3) A person who:

(A) does not own or lease, directly or indirectly, the facility or business at which the underground storage tank is located;

(B) does not participate in the management of the facility or business described in clause (A); and

(C) is engaged only in:

(i) filling;

(ii) gauging; or

(iii) filling and gauging;

the product level in the course of delivering fuel to an underground storage tank.

(4) A political subdivision (as defined in IC 36-1-2-13) or unit of federal or state government that:

(A) acquires ownership or control of an underground storage tank on a brownfield because of:

(i) bankruptcy;

(ii) foreclosure;

(iii) tax delinquency, including an acquisition under IC 6-1.1-24 or IC 6-1.1-25;

(iv) abandonment;

(v) the exercise of eminent domain, including any purchase of property once an offer to purchase has been tendered under IC 32-24-1-5;

(vi) receivership;

(vii) transfer from another political subdivision or unit of federal or state government;

(viii) acquiring an area needing redevelopment (as defined in IC 36-7-1-3) or conducting redevelopment activities, specifically under IC 36-7-14-22.2, IC 36-7-14-22.5, IC 36-7-15.1-15.1, IC 36-7-15.1-15.2, and IC 36-7-15.1-15.5;

(ix) other circumstances in which the political subdivision or unit of federal or state government involuntarily acquired an interest in the property because of the political subdivision's or unit's function as sovereign; or

(x) any other means to conduct remedial actions on a brownfield; and

(B) is engaged only in activities in conjunction with:

(i) investigation or remediation of hazardous substances, petroleum, and other pollutants associated with a brownfield, including complying with land use restrictions and institutional controls; or

(ii) monitoring or closure of an underground storage tank;

unless existing contamination on the brownfield is exacerbated due to gross negligence or intentional misconduct by the political subdivision or unit of federal or state government.

(f) For purposes of subsection (e)(3)(B), reckless, willful, or wanton misconduct constitutes gross negligence.

(g) "Operator" does not include a person that after June 30, 2009, meets, for purposes of the determination under IC 13-23-13 of liability for a release from an underground storage tank, the exemption criteria under Section 107(q) of CERCLA (42 U.S.C. 9607(q)) that apply for purposes of the determination of liability for a release of a hazardous substance.

(h) "Operator" does not include a person that meets, for purposes of the determination under IC 13-23-13 of liability for a release from an underground storage tank, the exemption criteria under Section 107(r) of CERCLA (42 U.S.C. 9607(r)) that apply for purposes of the determination of liability for a release of a hazardous substance, except that the person acquires ownership of the facility after June 30, 2009.

As added by P.L.1-1996, SEC.1. Amended by P.L.90-1998, SEC.7; P.L.212-1999, SEC.3; P.L.221-2007, SEC.3; P.L.78-2009, SEC.4; P.L.159-2011, SEC.4.

IC 13-11-2-158
"Person"

Sec. 158. (a) "Person", for purposes of:

(1) IC 13-21;
(2) air pollution control laws;
(3) water pollution control laws; and
(4) environmental management laws, except as provided in subsections (c), (d), (e), and (h);

means an individual, a partnership, a copartnership, a firm, a company, a corporation, an association, a joint stock company, a trust, an estate, a municipal corporation, a city, a school city, a town, a school town, a school district, a school corporation, a county, any consolidated unit of government, political subdivision, state agency, a contractor, or any other legal entity.

(b) "Person", for purposes of:

(1) IC 13-18-10;
(2) IC 13-18-10.5;
(3) IC 13-20-10.5; and
(4) IC 13-20-17;

means an individual, a partnership, a copartnership, a firm, a company, a corporation, an association, a joint stock company, a trust, an estate, a political subdivision, a state agency, or other legal entity, or their legal representative, agent, or assigns.

(c) "Person", for purposes of:

(1) IC 13-20-13;
(2) IC 13-20-14;
(3) IC 13-20-16; and
(4) IC 13-25-6;

means an individual, a corporation, a limited liability company, a partnership, or an unincorporated association.

(d) "Person", for purposes of IC 13-23, has the meaning set forth in subsection (a). The term includes a consortium, a joint venture, a commercial entity, and the United States government.

(e) "Person", for purposes of IC 13-20-17.5 and IC 13-25-3, means an individual, a corporation, a limited liability company, a partnership, a trust, an estate, or an unincorporated association.

(f) "Person", for purposes of IC 13-26, means an individual, a firm, a partnership, an

association, a limited liability company, or a corporation other than an eligible entity.

(g) "Person", for purposes of IC 13-29-1, means any individual, corporation, business enterprise, or other legal entity either public or private and any legal successor, representative, agent, or agency of that individual, corporation, business enterprise, or legal entity.

(h) "Person", for purposes of IC 13-30-8-1, has the meaning set forth in IC 35-41-1.

As added by P.L.1-1996, SEC.1. Amended by P.L.123-1997, SEC.9; P.L.225-2001, SEC.10; P.L.137-2007, SEC.6; P.L.189-2011, SEC.8

VIII. Preliminary Site Evaluation of CFO in Mapped Karst Areas

Items 1-6 must be completed with ALL investigative methods, item 7 is optional. In addition to items 1-6, if borings are used for investigation, items 8-11 must also be completed.

METHOD TO EVALUATE		CONDITION TO EVALUATE	SITE CONDITION	YES	NO
ALL METHODS	1	Variation in depth to water table in short distance	Depth to water and distance between holes		
	2	Highly variable limestone surface over short distance	Depth to bedrock surface and length of excavation		
	3	Depressions or collapse features in ground surface. Settlement near or adjoining structures.	Presence of small closed depressions		
	4	**Site specific geology** in relation to ponds, lakes and other features that may be the result of karst activity with particular attention to features that may have been covered during development of the site.	Area known to be on sinkhole plain, or cave country		
	5	Absence of clay confining layer over limestone bedrock	Only sand, residual chert or loose clay above bedrock		
	6	Soil strata not in normal sequence or uniform thickness	Soil shows dipping beds, or missing layers below surface		
	7	**Optional** Geophysical Investigation - Were anomalies found which can be attributed to karst conditions? If an anomaly is found is there non-karst interpretations	If performed		
BORINGS	8	**0 TO 15 ft. in depth** Average blow count <7 in granular material	Blow count		
	9	**15 to 40 ft. depth** Average blow counts < 15 in granular material.	Blow count		
	10	Loss of drill fluid, if used.	Was drilling fluid lost into the hole, or did it return to the surface?		
	11	Caving of drill hole or a drop of drilling tools.	Distance of drop, and depth below surface		

Thirteen Factors Generally Associated with Sinkhole Activity

No.	Condition	Cause	Site Condition	Yes/No
1	$N_{av.}$ < 7, in depth interval from 0 to 15 feet below ground surface in granular material	The presence of very loose to loose material within about 15 feet of the ground surface indicates raveling has possibly affected the surface soils within a zone of significant influence of the building foundations.		
2	$N_{av.}$ <15 in depth interval from 15 to 40 feet in granular material	The presence of loose material within a depth range of about 15 to 40 feet is an indicator of possible raveling in a zone that can, in time, affect the integrity of soil supporting the building.		
3	Loss of drill fluid	Losses of drilling fluid are significant in that they often indicate that loose and permeable zones are present. Sandy soils can readily move through these areas creating weak or raveling zones.		
4	Variation in depth to water table in short distance	Variation in depth to water table, in the borings, may indicate the presence of soil raveling or steep groundwater gradients indicative of sinkhole development.		
5	Caving of drill hole or a drop of drilling tools	Caving of the drill hole as the boring is being advanced or weight of rod (WOR) conditions are indicators of very loose/soft conditions that may result from karstic erosion.		
6	Substantial decrease in SPT values with increasing depth or drop of drilling tools	An abrupt decrease in SPT values with increasing depth can be indicative of loose raveling zones.		
7	Loose or soft material overlies highly fractured rock	An indication that piping of soil material into voids in the rock may have occurred causing a loosening of the surrounding soil.		
8	Absence of clay confining layer over limestone bedrock	Presence of clay confining layer prevents piping of soil material into voids in limestone rock.		
9	Highly variable limestone surface over short distance	An indication of highly solutioned limestone rock that likely contains voids.		
10	Settlement (near or adjoining structure)	Depressions of the surrounding ground surface particularly any that form as the boring is being advanced or evidence of recent settlement of ground around structure could indicate an active sinkhole. Presence of this condition alone may be sufficient to conclude sinkhole damage is present.		
11	Soil strata not in normal sequence or uniform thickness	Absence of continuity in the stratification between soil layers could indicate karst features		
12	Geologic History	Consider the history of the site relative to the occurrence of pond, lakes, and other features that may be the result of karst activity. Pay particular attention to features that may have been covered during development of the site by reviewing historic site data		
13	Geophysical Investigation	Were anomalies found that can be attributed to karst conditions? Are other factors present that can render one method favored over another? If an anomaly is found, is there other non-karst interpretation?		
Total number of positive indicators				