Please print or type with ELITE type (12 characters per inch) in the unshaded areas only

Form Approved, OMB No. 2050-0034 Expires 8-30-86
GSA No. 0246-EPA-OT

For EPA Regional Use Only

Date Received
Month Day Year

EPA
United States Environmental Protection Agency
Washington, DC 20460

Hazardous Waste Permit Application Part A

(Read the instructions before starting)

I. Installation's EPA ID Number (Mark "X" in the appropriate box)

[ ] A. First Part A Submission

[X] B. Part A Amendment #

C. Installation's EPA ID Number: IND000810861

D. Secondary ID Number (If applicable):

II. Name of Facility

AMOCO OIL WHITING REFY LAKEFRT

III. Facility Location (Physical address not P.O. Box or Route Number)

A. Street: 2815 INDIANAPOLIS BLVD

Street (Continued):

City or Town: WHITING

State: IN

Zip Code: 46394-

County Code (If known):

County Name: LAKE

B. Land Type (Enter code): P

C. Geographic Location
LATITUDE (Degrees, Minutes, & Seconds): 41 37 30
LONGITUDE (Degrees, Minutes & Seconds): 087 28 45

D. Facility Existence Date
Month Day Year: 1971

IV. Facility Mailing Address

Street or P.O. Box: SAME

City or Town:

State:

Zip Code: -

V. Facility Contact (Person to be contacted regarding waste activities at facility)

Name (Last): SKANNAL

(First): GREGORY

Job Title: SUPT WASTE

Phone Number (Area Code and Number): 219-473-3148

VI. Facility Contact Address (See instructions)

A. Contact Address
Location [X] Mailing [ ] Other [ ]

B. Street or P.O. Box:

City or Town:

State:

Zip Code: -

Form Approved, OMB No. 2050-0024 Expires 9-30-96
GSA No. 0246-EPA-OT

Please print or type with ELITE type (12 characters per inch) in the unshaded areas only

EPA I.D. Number *(Enter from page 1)*: IND000081086 1

Secondary Number *(Enter from page 1)*:

VII. Operator Information *(See Instructions)*

Name of Operator: AMOCO OIL CO SUPT RECLAMATION

Street or P.O. Box: 2815 INDIANAPOLIS BLVD

City or Town: WHITING

State: IN

ZIP Code: 46394 –

Phone Number *(Area Code and Number)*: 219 – 473 – 3176

B. Operator Type: P

C. Change of Operator Indicator: Yes [ ] No [X]

Date Changed: Month Day Year

VIII. Facility Owner *(See Instructions)*

A. Name of Facility's Legal Owner: AMOCO OIL CO E/O ENVIRONMENTAL

Street or P.O. Box: 2815 INDIANAPOLIS BLVD

City or Town: WHITING

State: IN

ZIP Code: 46394 –

Phone Number *(Area Code and Number)*: 219 – 473 – 3148

B. Owner Type: P

C. Change of Owner Indicator: Yes [ ] No [X]

Date Changed: Month Day Year

IX. SIC Codes *(4-digit, in order of significance)*

Primary: 2911 (Description) Petroleum Refining

Secondary: (Description)

Secondary: (Description)

Secondary: (Description)

X. Other Environmental Permits *(See Instructions)*

A. Permit Type (Enter code)	B. Permit Number	C. Description
N	IND000010 8	

EPA I.D. Number *(Enter from page 1)*

I	N	D	0	0	0	8	1	0	8	6	1

Secondary ID Number *(Enter from page 1)*

XI. Nature of Business *(Provide a brief description)*

Refines crude oil into petroleum products

XII. Process Codes and Design Capacities

A. PROCESS CODE - *Enter the code from the list of process codes below that best describes each process to be used at the facility. Thirteen lines are provided for entering codes. If more lines are needed, attach a separate sheet of paper with the additional information. For "other" processes (i.e., D99, S99, T04 and X99), describe the process (including its design capacity) in the space provided in item XIII.*

B. PROCESS DESIGN CAPACITY - *For each code entered in column A, enter the capacity of the process.*

1. AMOUNT - *Enter the amount. In a case where design capacity is not applicable (such as in a closure/post-closure or enforcement action) enter the total amount of waste for that process.*
2. UNIT OF MEASURE - *For each amount entered in column B(1), enter the code from the list of unit measure codes below that describes the unit of measure used. Only the units of measure that are listed below should be used.*

C. PROCESS TOTAL NUMBER OF UNITS - *Enter the total number of units used with the corresponding process code.*

PROCESS CODE	PROCESS	APPROPRIATE UNITS OF MEASURE FOR PROCESS DESIGN CAPACITY
	Disposal:	
D79	Underground Injection	Gallons; Liters; Gallons Per Day; or Liters Per Day
D80	Landfill	Acre-feet or Hectare-meter
D81	Land Treatment	Acres or Hectares
D82	Ocean Disposal	Gallons Per Day r Liters Per Day
D83	Surface Impoundment	Gallons or Liters
D99	Other Disposal	Any Unit of Measure Listed Below
	Storage:	
S01	Container (Barrel, Drum, Etc.)	Gallons or Liters
S02	Tank	Gallons or Liters
S03	Waste Pile	Cubic Yards or Cubic Meters
S04	Surface Impoundment	Gallons or Liters
S05	Drip Pad	Gallons or Liters
S06	Containment Building-Storage	Cubic Yards or Cubic Meters
S99	Other Storage	Any Unit of Measure Listed Below
	Treatment:	
T01	Tank	Gallons Per Day or Liters Per Day
T02	Surface Impoundment	Gallons Per Day or Liters Per Day
T03	Incinerator	Short Tons Per Hour; Metric Tons Per Hour; Gallons Per Hour; Liters Per Hour; or Btu's Per Hour
T04	Other Treatment	Gallons Per Day; Liters Per Day; Pounds Per Hour; Short Tons Per Hour; Kilograms Per Hour; Metric Tons Per Day; Metric Tons Per Hour; Short Tons Per Day; or Btu's Per Hour
T80	Boiler	Gallons or Liters
T81	Cement Kiln	Gallons Per Day; Liters Per Day; Pounds Per Hour; Short Tons Per Hour; Kilograms Per Hour; Metric Tons Per Day; Metric Tons Per Hour; Short Tons Per Day; or Btu's Per Hour
T82	Lime Kiln	
T83	Aggregate Kiln	
T84	Phosphate Kiln	
T85	Coke Oven	
T86	Blast Furnace	
T87	Smelting, Melting, Or Refining Furnace	Gallons Per Day; Liters Per Day; Pounds Per Hour; Short Tons Per Hour; Kilograms Per Hour; Metric Tons Per Day; Metric Tons Per Hour; Short Tons Per Day; or Btu's Per Hour
T88	Titanium Dioxide Chloride Process Oxidation Reactor	
T89	Methane Reforming Furnace	
T90	Pulping Liquor Recovery Furnace	
T91	Combustion Device Used In The Recovery Of Sulfur Values From Spent Sulfuric Acid	
T92	Halogen Acid Furnaces	
T93	Other Industrial Furnaces Listed In 40 CFR §260.10	
T94	Containment Building-Treatment	Cubic Yards or Cubic Meters
	Miscellaneous (Subpart X):	
X01	Open Burning/Open Detonation	Any Unit of Measure Listed Below
X02	Mechanical Processing	Short Tons Per Hour; Metric Tons Per Hour; Short Tons Per Day; Metric Tons Per Day; Pounds Per Hour; or Kilograms Per Hour
X03	Thermal Unit	Gallons Per Day; Liters Per Day; Pounds Per Hour; Short Tons Per Hour; Kilograms Per Hour; Metric Tons Per Day; Metric Tons Per Hour; Short Tons Per Day; or Btu's Per Hour
X04	Geologic Repository	Cubic Yards or Cubic Meters
X99	Other Subpart X	Any Unit of Measure Listed Below

UNIT OF MEASURE	UNIT OF MEASURE CODE
Gallons	G
Gallons Per Hour	E
Gallons Per Day	U
Liters	L
Liters Per Hour	H
Liters Per Day	V
Short Tons Per Hour	D
Metric Tons Per Hour	W
Short Tons Per Day	N
Metric Tons Per Day	S
Pounds Per Hour	J
Kilograms Per Hour	R
Cubic Yards	Y
Cubic Meters	C
Acres	B
Acre-feet	A
Hectares	Q
Hectare-meter	F
Btu's Per Hour	I

Please print or type with ELITE type (12 characters per inch) in the unshaded areas only

Form Approved, OMB No. 2050-0034 Expires 9-30-96
GSA No. 0246-EPA-OT

EPA I.D. Number (Enter from page 1): I N D 0 0 0 8 1 0 8 6 1

Secondary I.D. Number (Enter from page 1):

XII. Process Codes and Design Capabilities (Continued)

EXAMPLE FOR COMPLETING ITEM XII (Shown in line number X-1 below): A facility has a storage tank, which can hold 533,788 gallons.

Line Number	A. Process Code (From list above)	B. PROCESS DESIGN CAPACITY 1. Amount (Specify)	B. 2. Unit Of Measure (Enter code)	C. Process Total Number Of Units	For Official Use Only
X 1	S 0 2	5 3 3 , 7 8 8	G	0 0 1	
1	S 0 2	50,000 ,000	G	001	
2	S 0 2	63,718 ,000	G	001	
3	T 0 3	5,700 ,000	E	001	
4	S 0 1	6,750 ,000	G	001	
5		.			
6		.			
7		.			
8		.			
9		.			
10		.			
11		.			
12		.			
13		.			

NOTE: If you need to list more than 13 process codes, attach an additional sheet(s) with the information in the same format as above. Number the lines sequentially, taking into account any lines that will be used for "other" processes (i.e., D99, S99, T04 and X99) in Item XIII.

XIII. Other Processes (Follow instructions from Item XII for D99, S99, T04 and X99 process codes)

Line Number (Enter as in seq w/XII)	A. Process Code (From list above)	B. PROCESS DESIGN CAPACITY 1. Amount (Specify)	B. 2. Unit Of Measure (Enter code)	C. Process Total Number Of Units	D. Description Of Process
X 1	T 0 4				In-situ Vitrification.
5 1	T 0 4	2,400 ,000	G	001	Belt Dewatering Press for Scrubber Slurry
2		.			
3		.			
4		.			

EPA I.D. Number (Enter from page 1): I N D 0 0 0 8 1 0 8 6 1

Secondary ID Number (Enter from page 1):

XIV. Description of Hazardous Wastes

A. EPA HAZARDOUS WASTE NUMBER - *Enter the four-digit number from 40 CFR, Part 261 Subpart D of each listed hazardous waste you will handle. For hazardous wastes which are not listed in 40 CFR, Part 261 Subpart D, enter the four-digit number(s) from 40 CFR, Part 261 Subpart C that describes the characteristics and/or the toxic contaminants of those hazardous wastes.*

B. ESTIMATED ANNUAL QUANTITY - *For each listed waste entered in column A estimate the quantity of that waste that will be handled on an annual basis. For each characteristic or toxic contaminant entered in column A estimate the total annual quantity of all the non-listed waste(s) that will be handled which possess that characteristic or contaminant.*

C. UNIT OF MEASURE - *For each quantity entered in column B enter the unit of measure code. Units of measure which must be used and the appropriate codes are:*

ENGLISH UNIT OF MEASURE	CODE	METRIC UNIT OF MEASURE	CODE
POUNDS	P	KILOGRAMS	K
TONS	T	METRIC TONS	M

If facility records use any other unit of measure for quantity, the units of measure must be converted into one of the required units of measure taking into account the appropriate density or specific gravity of the waste.

D. PROCESSES

1. PROCESS CODES:

For listed hazardous waste: For each listed hazardous waste entered in column A select the code(s) from the list of process codes contained in Item XII A. on page 3 to indicate how the waste will be stored, treated, and/or disposed of at the facility.

For non-listed hazardous waste: For each characteristic or toxic contaminant entered in column A, select the code(s) from the list of process codes contained in Item XII A. on page 3 to indicate all the processes that will be used to store, treat, and/or dispose of all the non-listed hazardous wastes that possess that characteristic or toxic contaminant.

NOTE: THREE SPACES ARE PROVIDED FOR ENTERING PROCESS CODES. IF MORE ARE NEEDED:

1. *Enter the first two as described above.*
2. *Enter "000" in the extreme right box of Item XIV-D(1).*
3. *Enter in the space provided on page 7, Item XIV-E, the line number and the additional code(s).*

2. PROCESS DESCRIPTION: *If a code is not listed for a process that will be used, describe the process in the space provided on the form (D.(2)).*

NOTE: HAZARDOUS WASTES DESCRIBED BY MORE THAN ONE EPA HAZARDOUS WASTE NUMBER - Hazardous wastes that can be described by more than one EPA Hazardous Waste Number shall be described on the form as follows:

1. *Select one of the EPA Hazardous Waste Numbers and enter it in column A. On the same line complete columns B, C and D by estimating the total annual quantity of the waste and describing all the processes to be used to treat, store, and/or dispose of the waste.*
2. *In column A of the next line enter the other EPA Hazardous Waste Number that can be used to describe the waste. In column D(2) on that line enter "included with above" and make no other entries on that line.*
3. *Repeat step 2 for each EPA Hazardous Waste Number that can be used to describe the hazardous waste.*

EXAMPLE FOR COMPLETING ITEM XIV (shown in line numbers X-1, X-2, X-3, and X-4 below) - A facility will treat and dispose of an estimated 900 pounds per year of chrome shavings from leather tanning and finishing operation. In addition, the facility will treat and dispose of three non-listed wastes. Two wastes are corrosive only and there will be an estimated 200 pounds per year of each waste. The other waste is corrosive and ignitable and there will be an estimated 100 pounds per year of that waste. Treatment will be in an incinerator and disposal will be in a landfill.

Line Number		A. EPA HAZARD WASTE NO. (Enter code)				B. ESTIMATED ANNUAL QUANTITY OF WASTE	C. UNIT OF MEASURE (Enter code)	D. PROCESS (1) PROCESS CODES (Enter code)								D. PROCESS (2) PROCESS DESCRIPTION (If a code is not entered in D(1))
X	1	K	0	5	4	900	P	T	0	3	D	8	0			
X	2	D	0	0	2	400	P	T	0	3	D	8	0			
X	3	D	0	0	1	100	P	T	0	3	D	8	0			
X	4	D	0	0	2											Included With Above

Please print or type with ELITE type (12 characters per inch) in the unshaded areas only

Form Approved, OMB No. 2050-0024 Expires 9-30-96
GSA No. 0245-EPA-OT

EPA I.D. Number (Enter from page 1): I N D 0 0 0 8 1 0 8 6 1

Secondary ID Number (Enter from page 1):

XIV. Description of Hazardous Wastes (Continued)

Line Number	A. EPA HAZARDOUS WASTE NO. (Enter code)	B. ESTIMATED ANNUAL QUANTITY OF WASTE	C. UNIT OF MEASURE (Enter code)	D. PROCESSES (1) PROCESS CODES (Enter code)	D. PROCESSES (2) PROCESS DESCRIPTION (If a code is not entered in D(1))
1	D001	1,520	T	S01 S02 T03	
2	D002	30,000	T	S01 S02 T03	
3	D007	100	T	S01 S02 T03	
4	D008	400	T	S01 S02 T03	
5	K048	160,000	T	S01 S02 T03	
6	K049	1,500	T	S01 S02 T03	
7	K050	90	T	S01 S02 T03	
8	K051	3,400	T	S01 S02 T03	
9	K052	100	T	S01 S02 T03	
10	P110	10	T	S01 T03	
11	U002	70	P	S01 S02 T03	
12	U019	200	P	S01 S02 T03	
13	F001				Included with above
14	U045	200	P	S01 S02 T03	
15	U154	4,000	P	S01 S02 T03	
16	F005				Included above
17	U159	30	T	S01 S02 T03	
18	F005				Included above
19	U165	2	T	S01 S02 T03	
20	U188	60	T	S01 S02 T03	
21	F001				Included above
22	F002				Included above
23	U220	40	T	S01 S02 T03	
24	F005				Included above
25	U226	20	T	S01 S02 T03	
26	F001				Included above
27	F002				Included above
28	U227	700	P	S01 S02 T03	
29	F001				Included above
30	F002				Included above
31	U239	100	T	S01 S02 T03	
32	F003				Included above
33	D018	100	T	S01 S02 T03	

Please print or type with ELITE type (12 characters per inch) in the unshaded areas only

EPA I.D. Number (Enter from page 1): I N D 0 0 0 8 1 0 8 6 1

Secondary Number (Enter from page 1)

XIV. Description of Hazardous Wastes (Continued)

Line Number	A. EPA Hazardous Waste No. (Enter code)	B. Estimated Annual Quantity of Waste	C. Unit of Measure (Enter code)	D. Processes (1) Process Codes (Enter code)	D. Processes (2) Process Description (If a code is not entered in D(1))
34	D023	200	P	S01 S02 T03	
35	D024	200	P	S01 S02 T03	
36	D025	200	P	S01 S02 T03	
37	D026	200	P	S01 S02 T03	
38	D035	30	T	S01 S02 T03	
39	D006	10	T	S01	
40	D009	10	T	S01	
41	U151	10	T	S01	
42	U069	10	T	S01 S02 T03	
43	F037	300	T	S01 S02 T03	
44	F038	300	T	S01 S02 T03	
45					
46					
47					
48					
49					
50					
51					
52					
53					
54					
55					
56					
57					
58					
59					
60					
61					
62					
63					

Form Approved, OMB No. 2050-0034 Expires 9-30-96
GSA No. 0248-EPA-OT

Please print or type with ELITE type (12 characters per inch) in the unshaded areas only

EPA I.D. Number (Enter from page 1)	Secondary ID Number (Enter from page 1)
I N D 0 0 0 8 1 0 8 6 1	

XV. Map

Attach to this application a topographic map, or other equivalent map, of the area extending to at least one mile beyond property boundaries. The map must show the outline of the facility, the location of each of its existing and proposed intake and discharge structures, each of its hazardous waste treatment, storage, or disposal facilities, and each well where it injects fluids underground. Include all springs, rivers and other surface water bodies in this map area. See instructions for precise requirements.

XVI. Facility Drawing

All existing facilities must include a scale drawing of the facility (see instructions for more detail).

XVII. Photographs

All existing facilities must include photographs (aerial or ground-level) that clearly delineate all existing structures; existing storage, treatment and disposal areas; and sites of future storage, treatment or disposal areas (see instructions for more detail).

XVIII. Certification(s)

I certify under penalty of law that this document and all attachments were prepared under my direction or supervision in accordance with a system designed to assure that qualified personnel properly gather and evaluate the information submitted. Based on my inquiry of the person or persons who manage the system, or those persons directly responsible for gathering the information, the information submitted is, to the best of my knowledge and belief, true, accurate, and complete. I am aware that there are significant penalties for submitting false information, including the possibility of fine and imprisonment for knowing violations.

Owner Signature	Date Signed 5/19/94
Name and Official Title (Type or print) T. T. Scruggs, Amoco Oil Company, Whiting Refinery, Manager	
Owner Signature	Date Signed
Name and Official Title (Type or print)	
Operator Signature	Date Signed
Name and Official Title (Type or print)	
Operator Signature	Date Signed
Name and Official Title (Type or print)	

XIX. Comments

Maps, aerial photos and plot plan shown on pages 7, 8, 16, 17, 18, 19, and X-11

Note: Mail completed form to the appropriate EPA Regional or State Office. (Refer to instructions for more information)

ITEM M

RESEARCH, DEVELOPMENT, AND DEMONSTRATION PERMITS

This subject is not applicable, therefore, there is no submittal for Item M.

ITEM D-5b(l)-1

NEW INCINERATOR STARTUP

Since the Lakefront's incinerator is not a new one, no submittal is required for this section.

ITEM E

GROUNDWATER MONITORING

[40 CFR 270.14(c)]
[329 IAC 3-45-1]

This facility has not treated or disposed of any hazardous waste in or on land subject to regulation under this part. Therefore, no submittal is required for this item.

AUTHORIZATION

[40 CFR 270.11(a)(1) and (b)1]

At the beginning of this permit application is a letter of transmittal addressed to the Indiana Department of Environmental Management, and the U.S. EPA which includes the certification required by the regulations. The letter is signed by the Manager of Amoco's Whiting, Indiana refinery, to whom the authority to sign this document has been delegated in accordance with Amoco's corporate procedures.

ITEM K
PART B CERTIFICATION

[40 CFR 270.11(d)]
[329 IAC 3-34-2]

I Certify under penalty of law that this document and all attachments were prepared under my direction or supervision in accordance with a system designed to assure that qualified personnel properly gather and evaluate the information submitted. Based on my inquiry of the person or persons who manage the system, or those persons directly responsible for gathering the information, the information submitted is true, accurate, and complete. I am aware that there are significant penalties for submitting false information, including the possibility of fine and imprisonment for knowing violations.

Signed by Authorized Representative,

T. T. Scruggs
Refinery Manager

ITEM J

OTHER FEDERAL LAWS

[40 CFR 270.14(b)(20), 270.3]

The Lakefront Wastewater Treatment Facility is in compliance with the five Federal Laws listed in 40 CFR Section 270.3

a) Wild and Scenic Rivers Act: 16 USC 1271-1287.

Section 1271 "Congressional declaration of policy", sets out Congress' intent in passing this law. "It is hereby declared to be the national policy of the United States that certain selected rivers of the Nation which, with their immediate environments, possess outstandingly remarkable scenic recreational, geologic, fish and wildlife, historical, cultural, or other similar values, shall be preserved in free-flowing condition, and that they and their immediate environments shall be protected for the benefit and enjoyment of present and future generations."

Section 1274 "Component rivers and adjacent land", enumerates each river which has been designated as falling under the provisions of this Act. This list does not contain any rivers located, either in part or in their entirety, in the State of Indiana.

Therefore, the provisions of this Act are not applicable to the Whiting Refinery.

b) The National Historical Preservation Act of 1966: 16 USC 470 et. seq-

Section 470 "Short title; Congressional finding and declaration of policy", states the important governmental policies of encouraging, and assisting the preservation of important historical sites, as well as accelerating the federal government's own programs.

Section 470a "Historic preservation program", details the requirements of the program, and the authority given to the Secretary of the Interior to carry it out. This section references the provisions of 16 USC Section 461, "Declaration of national policy", which includes a list of National Historic Sites.None of the places listed under this section were in the State of Indiana.This facility is not aware of any additional considerations or factors that would make it suitable for inclusion in this list.

Therefore, the provisions of this Act are not applicable to the Whiting Refinery.

c) The Endangered Species Act 16 USC 1531-1543

Section 1531 "Congressional findings and declaration of purposes and policy", states that because various species of fish, wildlife and plants have been rendered extinct due to the activities of man, it is necessary to establish a federal policy designed to protect such endangered

species.

Section 1533 "Determination of Endangered Species and Threatened Species", details the criteria used for listing species. Actual lists of effected species are listed at 50 CFR 17.1 et. seq. An examination of these lists revealed that no plants were identified as including the State of Indiana as part of their historic range. A total of seven animals were shown as including Indiana within their historic range. These are: the Indiana Bat (Myotis sodalis), the following Pearly Mussels: Pink Mucket, Tubercled-blossom, White Cat's Paw, and the White Warty-back, the Rough Pigtoe and Fat Pocketbook, also mussels.

Telephone conversations with Ms. Michelle Martin and Mr. Dave Turner of the Indiana Department of Natural Resources provided the following information: None of the Mussels listed above are indigenous to this area, and therefore are not of concern with respect to this permit application.

The Indiana Bat inhabits caves during the winter, and trees with loose bark during the summer for maternity colonies. Since there are no caves or trees near this facility, we believe that there are no suitable habitats for this species in the area of our facility, and this species is not of concern with respect to this permit application.

Mr. Turner also stated that the Bald Eagle migrates through our area, but does not nest. He therefore believed that our facility would not have any effect on our facility.

We have also received a photocopy of a letter from Mr. David C. Hudak of the United States Department of the Interior (Bloomington Field Office) to a chemical recycling company located approximately 12 miles south of our facility. This letter mentioned the Indiana Bat as being the only endangered species within this area (see comments about the Indiana Bat above.)

Therefore, this Act is not applicable to the Whiting Refinery.

d) <u>The Coastal Zone Management Act</u> 16 USC 1451-1464

Section 1451 "Congressional Findings", states that there is a national interest in the effective management, use, and protection of the coastal zone, which includes the Great Lakes.

Section 1452 "Congressional declaration of policy", states that this policy includes encouraging and assisting "...the States to exercise effectively their responsibilities in the coastal zone through the development and implementation of management programs..."

The remaining sections of this Act describe procedures to assist the states in carrying out their responsibilities through grant programs, provisions for public hearings, the reviewing of the performance of various programs, the establishment of the Coastal Zone Management Advisory Committee, and other items.

Since the clear provisions and tone of this statute is toward regulating developmental activities, and this permit application is for an existing facility, this statute does not apply to the Lakefront. During a telephone conversation, Mr. Jim Hebenstrit of the Water Resources group of the Indiana Department of Natural Resources stated that the State of Indiana did not have a Coastal Zone Management organization, and therefore this facility was not subject to any state or federal requirements under the Coastal Zone Management Act.

Therefore, this Act is not applicable to the Whiting Refinery.

e) The Fish and Wildlife Coordination Act 16 USC 661-668. The provisions of this Act require that the Regional Administrator (herein the Commissioner of the IDEM) to consult with the appropriate state agency exercising jurisdiction over wildlife prior to issuing a permit which proposes or authorizes the impoundment, modification, or diversion of any body of water. This permit application does not seek the alteration of any body of water.

Therefore, this Act is not applicable to the Whiting Refinery.

ATTACHMENT 3

AMOCO OIL COMPANY - WHITING REFINERY

WATER FLOW BALANCE DIAGRAM

Amoco Oil Company Whiting Refinery
Water Flow Diagram
(Flows in Million Gallons per Day)

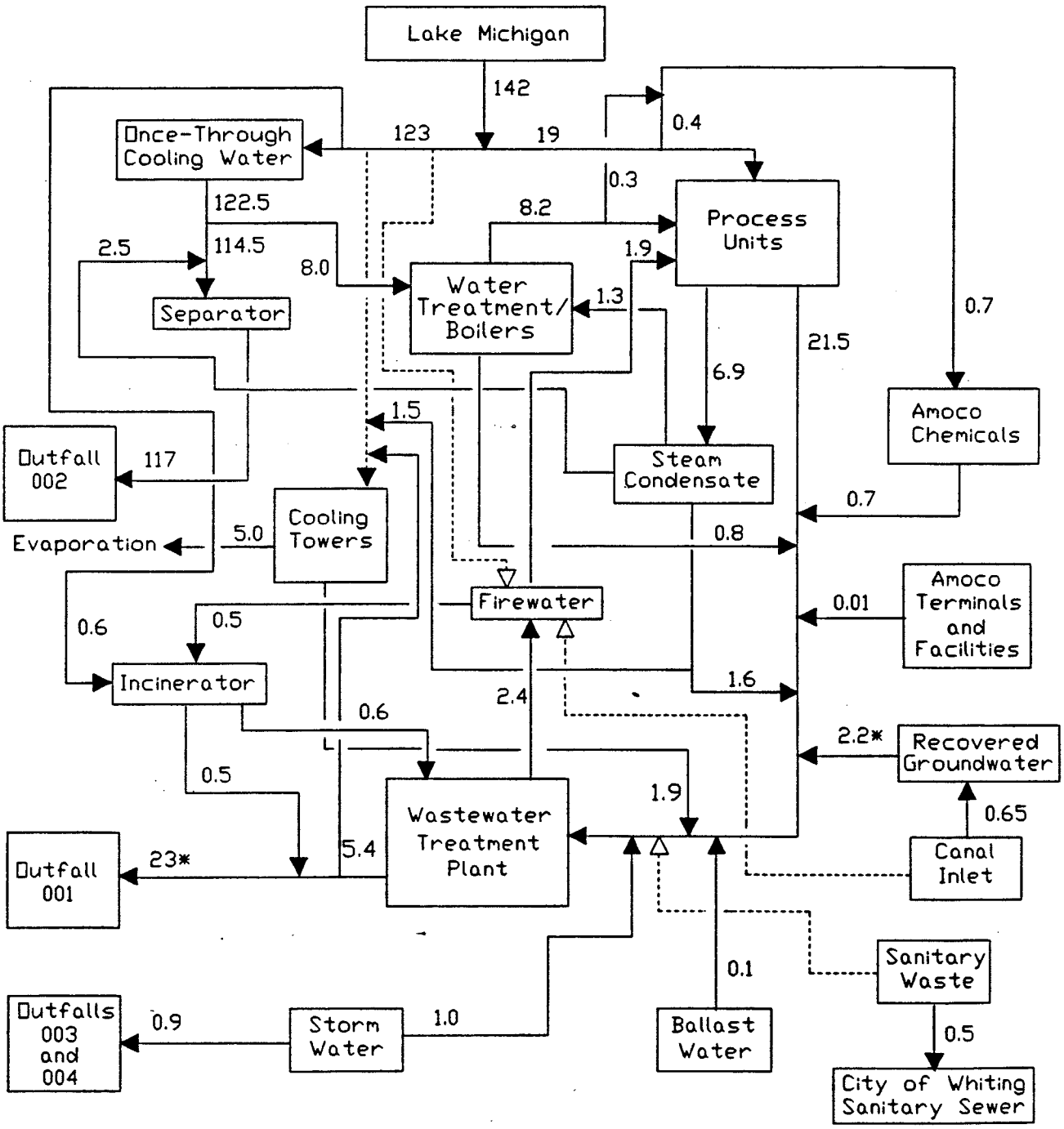

* This flow might increase depending on groundwater recovery.

LEGEND

------- Lines available, but not normally used.

08/16/94
nrg

ATTACHMENT 4

AMOCO OIL COMPANY - WHITING REFINERY

WWTP FLOW DIAGRAM

Wastewater Treatment Plant - Water Flow Diagram

Amoco Oil Company - Whiting Refinery

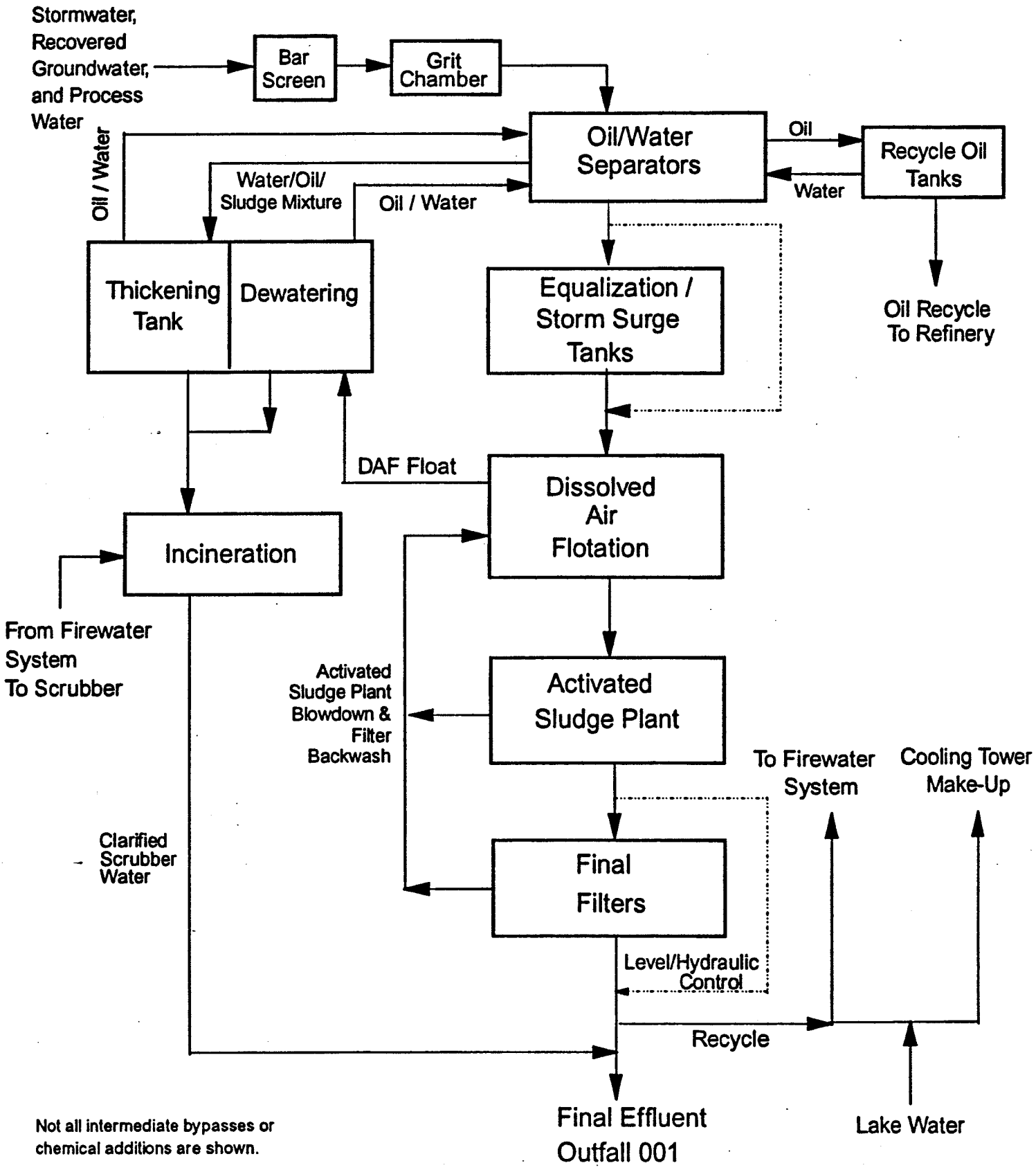

Not all intermediate bypasses or chemical additions are shown.

8/94

Table IV
Amoco Oil Company - Whiting Refinery
Process Units & Other Sources Contributing Flow to Outfalls

	Outfall 001 Flow (mgd)	Outfall 002 Flow (mgd)
Process Units		
Alkylation	0.18	22.46
Asphalt	0.21	0.00
Barrel House/Compounding	0.17	0.00
Blending Oil Unit	0.33	0.00
Cat Feed Hydrotreating Unit	0.33	0.00
Catalytic Refining Unit	0.33	0.00
Crude Station/UTLX	0.04	0.00
Distillate Desulfurization Unit	0.00	0.00
FCU 500	0.87	0.06
FCU 600	0.87	0.06
Grease Works	0.38	0.00
Lubes/White Oil Hi-Fi	0.01	2.47
Hydrogen Unit	0.03	0.00
Indiana Tank Field	0.04	0.00
Isomerization Unit	0.10	0.37
J & L Tank Field	0.25	0.00
Lab	0.01	0.00
Lake George Tank Field	0.02	0.00
LPG Storage/Loading Racks	0.01	0.00
Lube Pumphouse	0.12	0.00
Mechanical Shops/Truck Garage	0.02	0.00
MEK	0.02	4.20
Motor Oil Blending	0.08	0.00
No. 11 Pipestill	2.18	14.32
No. 12 Pipestill	1.98	13.58
No. 37 Pipestill	0.02	8.52
No. 2 Treating Plant	0.03	0.00
No. 4 TP/Berry Lake Tank Field	2.48	0.00
No. 3 Ultraformer	0.50	0.00
No. 4 Ultraformer	0.50	0.00
PCU	0.02	3.70
* Propane Dewaxing	0.00	0.00
Solvent Extraction Unit	0.02	3.09
South Tank Field	0.02	0.00
Sulfur Recovery Unit	1.19	12.09
Stieglitz Tank Field	0.01	0.00
VRU 100/200	0.58	0.00
VRU 300	0.25	28.39
Wax Refinery	0.02	0.12
Xylene	0.04	0.00
Other Sources		
Amoco Chemicals	0.70	0.00
Amoco Terminals & Facilities	0.01	0.00
Cooling Towers	1.90	0.00
Incinerator	0.50	0.00
Marine Docks (Ballast Water)	0.10	0.00
Steam Condensate	1.60	0.00
Stormwater	1.00	0.00
Remediation Water	2.20	0.00
Water Treatment/ Boilers	0.80	3.58
TOTAL	23.04	117.00

* Unit no longer in service.
mgd = million gallons per day

08/15/94
nrg

Table V
Amoco Oil Company - Whiting Refinery
Wastewater Treatment Description

Outfall	Unit	Size	Flowrate	Retention Time	Unit Code	Waste Disposal	Waste Code
001	Bar Screen	108" D	15 - 37 mgd	negligible	1-T	Incineration	5-O
	Grit Chamber	18' D X 16.6' H	15 - 37 mgd	negligible	1-M	Incineration	5-O
	Oil/Water Separator	4.9 mgal	15 - 37 mgd	3 - 8 hrs	1-U, 1-H	Incineration	5-O
	Equalization/Storm Surge Tanks	20 mgal	15 - 37 mgd	6 - 32 hrs	1-H	Incineration	5-O
	Dissolved Air Flotation	1.5 mgal	15 - 37 mgd	1- 2.5 hrs	1-G, 1-H	Incineration	5-O
	Activated Sludge Plant	16 mgal	15 - 37 mgd	10 - 25 hrs	3-A	Incineration and/or Landfill	5-O, 5-Q
	Final Filters	84,000 gal	15 - 37 mgd	negligible	1-Q	N/A	N/A
002	Oil/Water Separator	6.7 mgal	90 - 150 mgd	1 to 2 hrs	1-H	Landfill and/or Landfarm	5-Q, 5-P
003	Oil/Water Separator	47,000 gal	350 - 1500 gpm	0.5 to 2.5 hrs	1-H	Landfill	5-Q
004	None						

Legend:

D - diameter
gal - gallons
gpm - gallons per minute
H - height
hrs - hours
mgal - million gallons
mgd - million gallons per day

08/15/94
nrg

Table VI
Amoco Oil Company - Whiting Refinery
Average Daily Production - Affected Outfalls
(Subpart D - Lube Subcategory)

Process	Average Daily Production 1,000 bbl per stream day	Affected Outfall
CRUDE		
Atm. Distillation	410.0	001
Vacuum Dist.	212.0	001 and 002
Desalting	410.0	001 and 002
CRACKING & COKING		
Fluid Catalytic Cracking	157.0	001 and 002
Delayed Coking	28.6	001 and 002
LUBE		
Hydrofinishing	3.72	001 and 002
White Oil Mfg.	1.08	001 and 002
Prop-Dewax	0.0	N/A
Wax Fractionating	20.7	001 and 002
MEK Dewaxing	2.8	001 and 002
Wax Sweating	7.2	001 and 002
NMP Extraction	12.7	001 and 002
ASPHALT		
Asphalt Production	60.0	001 and 002
Asphalt Oxidation	0.0	N/A
REFORMING & ALKYLATION		
Alkylation	31.0	001 and 002
Reforming	90.0	001
Hydrotreating	188.3	001 and 002

05/17/94
nrg

Table VII
Amoco Oil Company - Whiting Refinery
Calculation of Process Configuration
(Subpart D - Lube Subcategory)

PROCESS	Capacity 1,000 bbl per stream day	Capacity relative to throughput		Weighting Factor		Processing Configuration
CRUDE						
Atm. Distillation	410.0	1.000				
Vacuum Dist.	212.0	0.517				
Desalting	410.0	1.000				
		2.517	X	1	=	2.517
CRACKING & COKING						
Fluid Catalytic Cracking	157.0	0.383				
Delayed Coking	28.6	0.070				
		0.453	X	6	=	2.718
LUBE						
Hydrofinishing	3.72	0.009				
White Oil Mfg.	1.08	0.003				
Prop-Dewax	0.0	0.000				
Wax Fractionating	20.7	0.050				
MEK Dewaxing	2.8	0.007				
Wax Sweating	7.2	0.018				
NMP Extraction	12.7	0.031				
		0.290	X	13	=	1.534
ASPHALT						
Asphalt Production	60.0	0.146				
Asphalt Oxidation	0.0	0.000				
		0.146	X	12	=	1.752
				Process Configuration Factor		8.521

SIZE FACTOR

Based on Subpart D 419.42 (b) (1) Table:

1,000 bbl of feedstock per stream day	Size Factor
200.0 or greater	1.19

PROCESS FACTOR

Based on Subpart D 419.42 (b) (2) Table:

Process Configuration Factor	Process Factor
8.5 to 8.99	1.19

07/28/94
nrg

Table VIII
Amoco Oil Company - Whiting Refinery
Sum of Products of each Effluent Limitation Factor
(Based on 419.43 (3) (c) (1))

CRUDE

Atm. Distillation	410.0
Vacuum Dist.	212.0
Desalting	410.0
	1032.0

CRACKING & COKING

Fluid Catalytic Cracking	157.0
Delayed Coking	28.6
	185.6

ASPHALT

Asphalt Production	60.0
Asphalt Oxidation	0.0
	60.0

LUBE

Hydrofinishing	3.7
White Oil Mfg.	1.1
Prop-Dewaxing	0.0
Wax Fractionating	20.7
MEK Dewaxing	2.8
Wax Sweating	7.2
NMP Extraction	12.7
	48.2

REFORMING & ALKYLATION

Alkylation	31.0
Reforming	90.0
Hydrotreating	188.3
	309.3

05/17/94
nrg

ATTACHMENT 5

AMOCO OIL COMPANY - WHITING REFINERY

POLLUTION CONTROL PROGRAMS

NTINUED FROM PAGE V-4

IND000810861 | 001

1. POLLUTANT AND CAS NUMBER (If available)	2. MARK 'X' a. TESTING REQUIRED	b. BELIEVED PRESENT	c. BELIEVED ABSENT	3. EFFLUENT a. MAXIMUM DAILY VALUE (1) CONCENTRATION	(2) MASS	b. MAXIMUM 30 DAY VALUE (If available) (1) CONCENTRATION	(2) MASS	c. LONG TERM AVRG. VALUE (If available) (1) CONCENTRATION	(2) MASS	d. NO. OF ANALYSES	4. UNITS a. CONCENTRATION	b. MASS	5. INTAKE (optional) a. LONG TERM AVERAGE VALUE (1) CONCENTRATION	(2) MASS	b. NO. OF ANALYSES
C/MS FRACTION – VOLATILE COMPOUNDS *(continued)*															
2V. Methylene hloride (75-09-2)	X			<5						1	µg/L				
3V. 1,1,2,2-Tetra-hloroethene 9-34-5)	X			<5						1	µg/L				
4V. Tetrachloro-thylene (127-18-4)	X			<5						1	µg/L				
5V. Toluene 108-88-3)	X			<5						1	µg/L				
6V. 1,2-Trans-ichloroethylene 156-60-5)	X			<5						1	µg/L				
7V. 1,1,1-Tri-hloroethane 71-55-6)	X			<5						1	µg/L				
8V. 1,1,2-Tri-hloroethane 79-00-5)	X			<5						1	µg/L				
9V. Trichloro-thylene (79-01-6)	X			<5						1	µg/L				
0V. Trichloro-luoromethane 75-69-4)	X			<5	As per 49 Federal Register 2264, this analyte was removed from the Priority Pollutant List.					1	µg/L				
1V. Vinyl Chloride (75-01-4)	X			<10						1	µg/L				
C/MS FRACTION – ACID COMPOUNDS															
1A. 2-Chlorophenol 95-57-8)	X			<5						3	µg/L				
2A. 2,4-Dichloro-phenol (120-83-2)	X			<5						3	µg/L				
3A. 2,4-Dimethyl-phenol (105-67-9)	X			<5						3	µg/L				
4A. 4,6-Dinitro-O-Cresol (534-52-1)	X			<5						3	µg/L				
5A. 2,4-Dinitro-phenol (51-28-5)	X			<10						3	µg/L				
6A. 2-Nitrophenol (88-75-5)	X			<5						3	µg/L				
7A. 4-Nitrophenol (100-02-7)	X			<5						3	µg/L				
8A. P-Chloro-M-Cresol (59-50-7)	X			<5						3	µg/L				
9A. Pentachloro-phenol (87-86-5)	X			<10						3	µg/L				
10A. Phenol (108-95-2)	X			<5						3	µg/L				
11A. 2,4,6-Tri-chlorophenol (88-06-2)	X			<5						3	µg/L				

CONTINUE ON REVERSE

CONTINUED FROM THE FRONT

1. POLLUTANT AND CAS NUMBER (if available)	2. MARK 'X' a. TESTING REQUIRED	b. BELIEVED PRESENT	c. BELIEVED ABSENT	3. EFFLUENT a. MAXIMUM DAILY VALUE (1) CONCENTRATION	(2) MASS	b. MAXIMUM 30 DAY VALUE (if available) (1) CONCENTRATION	(2) MASS	c. LONG TERM AVRG. VALUE (if available) (1) CONCENTRATION	(2) MASS	d. NO. OF ANALYSES	4. UNITS a. CONCENTRATION	b. MASS	5. INTAKE (optional) a. LONG TERM AVERAGE VALUE (1) CONCENTRATION	(2) MASS	b. NO. OF ANALYSES
GC/MS FRACTION -- BASE/NEUTRAL COMPOUNDS															
1B. Acenaphthene (83-32-9)	X			<5						2	µg/L				
2B. Acenaphtylene (208-96-8)	X			<5						2	µg/L				
3B. Anthracene (120-12-7)	X			<5						2	µg/L				
4B. Benzidine (92-87-5)	X			<5						2	µg/L				
5B. Benzo (a) Anthracene (56-55-3)	X			<5						2	µg/L				
6B. Benzo (a) Pyrene (50-32-8)	X			<5						2	µg/L				
7B. 3,4-Benzo-fluoranthene (205-99-2)	X			<5						2	µg/L				
8B. Benzo (ghi) Perylene (191-24-2)	X			<5						2	µg/L				
9B. Benzo (k) Fluoranthene (207-08-9)	X			<5						2	µg/L				
10B. Bis (2-Chloro-ethoxy) Methane (111-91-1)	X			<5						2	µg/L				
11B. Bis (2-Chloro-ethyl) Ether (111-44-4)	X			<5						2	µg/L				
12B. Bis (2-Chloro-isopropyl) Ether (39638-32-9)	X			<5						2	µg/L				
13B. Bis (2-Ethyl-hexyl) Phthalate (117-81-7)	X			<5						2	µg/L				
14B. 4-Bromo-phenyl Phenyl Ether (101-55-3)	X			<5						2	µg/L				
15B. Butyl Benzyl Phthalate (85-68-7)	X			<5						2	µg/L				
16B. 2-Chloro-naphthalene (91-58-7)	X			<5						2	µg/L				
17B. 4-Chloro-phenyl Phenyl Ether (7005-72-3)	X			<5						2	µg/L				
18B. Chrysene (218-01-9)	X			<5						2	µg/L				
19B. Dibenzo (a,h) Anthracene (53-70-3)	X			<5						2	µg/L				
20B. 1,2-Dichloro-benzene (95-50-1)	X			<5						2	µg/L				
21B. 1,3-Dichloro-benzene (541-73-1)	X			<5						2	µg/L				

CONTINUE ON PAGE V-7

AUG 2 3 1994

EPA I.D. NUMBER (copy from Item 1 of Form 1) IND000810861 OUTFALL NUMBER 001

Form Approved OMB No. 158-R0173

1. POLLUTANT AND CAS NUMBER (If available)	2. MARK 'X' a. TESTING REQUIRED	b. BELIEVED PRESENT	c. BELIEVED ABSENT	3. EFFLUENT a. MAXIMUM DAILY VALUE (1) CONCENTRATION	(2) MASS	b. MAXIMUM 30 DAY VALUE (if available) (1) CONCENTRATION	(2) MASS	c. LONG TERM AVRG. VALUE (if available) (1) CONCENTRATION	(2) MASS	d. NO. OF ANALYSES	4. UNITS a. CONCENTRATION	b. MASS	5. INTAKE (optional) a. LONG TERM AVERAGE VALUE (1) CONCENTRATION	(2) MASS	b. NO. OF ANALYSES
GC/MS FRACTION — BASE/NEUTRAL COMPOUNDS (continued)															
22B. 1,4-Dichlorobenzene (106-46-7)	X			<5						2	µg/L				
23B. 3,3'-Dichlorobenzidine (91-94-1)	X			<5						2	µg/L				
24B. Diethyl Phthalate (84-66-2)	X			<5						2	µg/L				
25B. Dimethyl Phthalate (131-11-3)	X			<5						2	µg/L				
26B. Di-N-Butyl Phthalate (84-74-2)	X			<5						2	µg/L				
27B. 2,4-Dinitrotoluene (121-14-2)	X			<5						2	µg/L				
28B. 2,6-Dinitrotoluene (606-20-2)	X			<5						2	µg/L				
29B. Di-N-Octyl Phthalate (117-84-0)	X			<5						2	µg/L				
30B. 1,2-Diphenylhydrazine (as Azobenzene) (122-66-7)	X			<5						2	µg/L				
31B. Fluoranthene (206-44-0)	X			<5						2	µg/L				
32B. Fluorene (86-73-7)	X			<5						2	µg/L				
33B. Hexachlorobenzene (118-71-1)	X			<5						2	µg/L				
34B. Hexachlorobutadiene (87-68-3)	X			<5						2	µg/L				
35B. Hexachlorocyclopentadiene (77-47-4)	X			<10						2	µg/L				
36B. Hexachloroethane (67-72-1)	X			<5						2	µg/L				
37B. Indeno (1,2,3-cd) Pyrene (193-39-5)	X			<5						2	µg/L				
38B. Isophorone (78-59-1)	X			<5						2	µg/L				
39B. Naphthalene (91-20-3)	X			<5						2	µg/L				
40B. Nitrobenzene (98-95-3)	X			<5						2	µg/L				
41B. N-Nitrosodimethylamine (62-75-9)	X			<5						2	µg/L				
42B. N-Nitrosodi-N-Propylamine (621-64-7)	X			<5						2	µg/L				

CONTINUE ON REVERSE

AUG 2 3 1984

CONTINUED FROM THE FRONT

1. POLLUTANT AND CAS NUMBER (if available)	2. MARK 'X' a. TESTING REQUIRED	b. BELIEVED PRESENT	c. BELIEVED ABSENT	3. EFFLUENT a. MAXIMUM DAILY VALUE (1) CONCENTRATION	(2) MASS	b. MAXIMUM 30 DAY VALUE (if available) (1) CONCENTRATION	(2) MASS	c. LONG TERM AVRG. VALUE (if available) (1) CONCENTRATION	(2) MASS	d. NO. OF ANALYSES	4. UNITS a. CONCENTRATION	b. MASS	5. INTAKE (optional) a. LONG TERM AVERAGE VALUE (1) CONCENTRATION	(2) MASS	b. NO. OF ANALYSES
GC/MS FRACTION — BASE/NEUTRAL COMPOUNDS (continued)															
43B. N-Nitrosodiphenylamine (86-30-6)	X			<5						2	µg/L				
44B. Phenanthrene (85-01-8)	X			<5						2	µg/L				
45B. Pyrene (129-00-0)	X			<5						2	µg/L				
46B. 1,2,4-Trichlorobenzene (120-82-1)	X			<5						2	µg/L				
GC/MS FRACTION — PESTICIDES															
1P. Aldrin (309-00-2)	X			<0.05						1	mg/L				
2P. α-BHC (319-84-6)	X			<0.05						1	mg/L				
3P. β-BHC (319-85-7)	X			<0.05						1	mg/L				
4P. γ-BHC (58-89-9)	X			<0.05						1	mg/L				
5P. δ-BHC (319-86-8)	X			<0.05						1	mg/L				
6P. Chlordane (57-74-9)	X			<0.05						1	mg/L				
7P. 4,4'-DDT (50-29-3)	X			<0.1						1	mg/L				
8P. 4,4'-DDE (72-55-9)	X			<0.1						1	mg/L				
9P. 4,4'-DDD (72-54-8)	X			<0.1						1	mg/L				
10P. Dieldrin (60-57-1)	X			<0.1						1	mg/L				
11P. α-Endosulfan (115-29-7)	X			<0.05						1	mg/L				
12P. β-Endosulfan (115-29-7)	X			<0.1						1	mg/L				
13P. Endosulfan Sulfate (1031-07-8)	X			<0.1						1	mg/L				
14P. Endrin (72-20-8)	X			<0.1						1	mg/L				
15P. Endrin Aldehyde (7421-93-4)	X			<0.1						1	mg/L				
16P. Heptachlor (76-44-8)	X			<0.5						1	mg/L				

EPA Form 3510-2C (6-80)

CONTINUE ON PAGE V-9

AUG 23 1994

EPA I.D. NUMBER (copy from Item I of Form 1)	OUTFALL NUMBER
IND000810861	001

Form Approved OMB No. 158-R0173

CONTINUED FROM PAGE V-8

1. POLLUTANT AND CAS NUMBER (if available)	2. MARK 'X' a. TESTING REQUIRED	b. BELIEVED PRESENT	c. BELIEVED ABSENT	3. EFFLUENT a. MAXIMUM DAILY VALUE (1) CONCENTRATION	(2) MASS	b. MAXIMUM 30 DAY VALUE (if available) (1) CONCENTRATION	(2) MASS	c. LONG TERM AVRG. VALUE (if available) (1) CONCENTRATION	(2) MASS	d. NO. OF ANALYSES	4. UNITS a. CONCENTRATION	b. MASS	5. INTAKE (optional) a. LONG TERM AVERAGE VALUE (1) CONCENTRATION	(2) MASS	b. NO. OF ANALYSES
GC/MS FRACTION — PESTICIDES (continued)															
17P. Heptachlor Epoxide (1024-57-3)	X			<0.05						1	mg/L				
18P. PCB-1242 (53469-21-9)	X			<1						1	mg/L				
19P. PCB-1254 (11097-69-1)	X			<1						1	mg/L				
20P. PCB-1221 (11104-28-2)	X			<2						1	mg/L				
PCB-1232 (11141-16-5)	X			<1						1	mg/L				
22P. PCB-1248 (12672-29-6)	X			<1						1	mg/L				
23P. PCB-1260 (11096-82-5)	X			<1						1	mg/L				
24P. PCB-1016 (12674-11-2)	X			<1						1	mg/L				
25P. Toxaphene (8001-35-2)	X			<5						1	mg/L				

FOOTNOTE (a): See attached Footnote A – Table 1 – Summary of "Non Detects" (ND) From Outfall Databases.
(b): See attached Footnote B – Table 1 – Whiting STORET Database.
(c): See attached Footnote C – Total Versus Dissolved Ratio Study.
(d): See attached Footnote D – Arsenic Speciation Study.
(f): Highest value (10,553 lb/d on 8/31/93) is not included in the data set since it occurred due to successive rainfall events related to the extreme Midwest flooding of 1993.
(g): The single "non–detect" of <5 mg/L and <0.46 lb/d of Cd and <1 mg/L and <0.09 lb/d of Hg on 3/2/93 is not shown as the "maximum", as the MDL was greater than the MDL of <2 mg/L for Cd and <0.5 mg/L for Hg achieved for the rest of the samples. A different laboratory performed this single analysis.
(h): As per IDEM 1992 WLA, summer = July 1 – September 30 and winter = October 1 – June 30.

AUG 2 3 199

PLEASE PRINT OR TYPE IN THE UNSHADED AREAS ONLY. You may report some or all of this information on separate sheets *(use the same format)* instead of completing these pages. SEE INSTRUCTIONS.

EPA I.D. NUMBER *(copy from Item 1 of Form 1)*: IND000810861

Form Approved OMB No. 158-R0173

V. INTAKE AND EFFLUENT CHARACTERISTICS *(continued from page 3 of Form 2-C)*

OUTFALL 002

PART A - You must provide the results of at least one analysis for every pollutant in this table. Complete one table for each outfall. See instructions for additional details.

1. POLLUTANT	2. EFFLUENT a. MAXIMUM DAILY VALUE (1) CONCENTRATION	(2) MASS	b. MAXIMUM 30 DAY VALUE *(if available)* (1) CONCENTRATION	(2) MASS	c. LONG TERM AVRG. VALUE *(if available)* (1) CONCENTRATION	(2) MASS	d. NO. OF ANALYSES	3. UNITS *(specify if blank)* a. CONCENTRATION	b. MASS	4. INTAKE *(optional)* a. LONG TERM AVERAGE VALUE (1) CONCENTRATION	(2) MASS	b. NO. OF ANALYSES
a. Biochemical Oxygen Demand *(BOD)*	6	4,924					1	mg/L	lbs			
b. Chemical Oxygen Demand *(COD)*	7	5,745					1	mg/L	lbs			(b)
c. Total Organic Carbon *(TOC)*	7.0	5,860	4.4	4,182	3.0	2,550	804	mg/L	lbs	2.9	2,459	804
d. Total Suspended Solids *(TSS)*	<10	<8,207					1	mg/L	lbs			(b)
e. Ammonia *(as N)*	<0.10	<82.1					1	mg/L	lbs			
f. Flow	VALUE 130		VALUE 117		VALUE 103		1,126	mgd		VALUE 103		1126
g. Temperature *(winter)*	VALUE 38.0[e,h]		VALUE 34.4		VALUE 22.8		849	°C		VALUE 8.7		849
h. Temperature *(summer)*	VALUE 38.0[e,h]		VALUE 37.1		VALUE 34.2		276	°C		VALUE 18.8		276
i. pH	MINIMUM 7.4	MAXIMUM 8.8	MINIMUM 8.0	MAXIMUM 8.4			484	STANDARD UNITS				

PART B - Mark "X" in column 2-a for each pollutant you know or have reason to believe is present. Mark "X" in column 2-b for each pollutant you believe to be absent. If you ma column 2-a for any pollutant, you must provide the results of at least one analysis for that pollutant. Complete one table for each outfall. See the instructions for additior details and requirements.

1. POLLUTANT AND CAS NO. *(if available)*	2. MARK 'X' a. BELIEVED PRESENT	b. BELIEVED ABSENT	3. EFFLUENT a. MAXIMUM DAILY VALUE (1) CONCENTRATION	(2) MASS	b. MAXIMUM 30 DAY VALUE *(if available)* (1) CONCENTRATION	(2) MASS	c. LONG TERM AVRG. VALUE *(if available)* (1) CONCENTRATION	(2) MASS	d. NO. OF ANALYSES	4. UNITS a. CONCENTRATION	b. MASS	5. INTAKE *(optional)* a. LONG TERM AVERAGE VALUE (1) CONCENTRATION	(2) MASS	b. NO. OF ANALYSES
a. Bromide (24959-67-9)		X	<0.1	<82.1					1	mg/L	lbs			
b. Chlorine, Total Residual		X[a]	0.04	<43.4	0.04	<38.6	<0.04	<34.6	161	mg/L	lbs			
c. Color	X		<10						1	color/unit				
d. Fecal Coliform	X		<1						1	No./100mL				(b)
e. Fluoride (16984-48-8)	X		0.1	82.1					1	mg/L	lbs			(b)
f. Nitrate-Nitrite *(as N)*	X		1.8/<1.0	1,477/<821					1	mg/L	lbs			(b)

CONTINUE ON REVERS

AUG 2 3 1994

ITEM V-B CONTINUED FROM FRONT

1. POLLUTANT AND CAS NO. (If available)	2. MARK 'X' a. BELIEVED PRESENT	b. BELIEVED ABSENT	3. EFFLUENT a. MAXIMUM DAILY VALUE (1) CONCENTRATION	(2) MASS	b. MAXIMUM 30 DAY VALUE (If available) (1) CONCENTRATION	(2) MASS	c. LONG TERM AVRG. VALUE (If available) (1) CONCENTRATION	(2) MASS	d. NO. OF ANALYSES	4. UNITS a. CONCENTRATION	b. MASS	5. INTAKE (optional) a. LONG TERM AVERAGE VALUE (1) CONCENTRATION	(2) MASS	b. NO. OF ANALYSES
g. Nitrogen, Total Organic (as N)	X		0.45	369					1	mg/L	lbs			
h. Oil and Grease	X[a]		4.9	4,623	3.7	3,099	0.8	643	483	mg/L	lbs	0.40	384	482
i. Phosphorus (as P), Total (7723-14-0)	X		<0.02	<16.4					1	mg/L	lbs			
j. Radioactivity														
(1) Alpha, Total		X	<5.3						1	pCi/L				
(2) Beta, Total		X	<8.5						1	pCi/L				
(3) Radium, Total		X	6.97+/−2.2						1	pCi/L				
(4) Radium 226, Total		X	0.57+/−0.4						1	pCi/L				
k. Sulfate (as SO_4) (14808-79-8)	X		27	22,158					1	mg/L	lbs			(b)
l. Sulfide (as S)		X	<1	<821					1	mg/L	lbs			
m. Sulfite (as SO_3) (14265-45-3)		X	<2	<1,641					1	mg/L	lbs			
n. Surfactants		X	<0.40	<328					1	mg/L	lbs			
o. Aluminum, Total (7429-90-5)	X		47.0	38.6					1	µg/L	lbs			
p. Barium, Total (7440-39-3)	X		21	17.2					1	µg/L	lbs			(b)
q. Boron, Total (7440-42-8)	X		40	32.8					1	µg/L	lbs			
r. Cobalt, Total (7440-48-4)		X	<3	<2.46					1	µg/L	lbs			
s. Iron, Total (7439-89-6)	X		80	65.7					1	µg/L	lbs			(b)
t. Magnesium, Total (7439-95-4)	X		12.1	9,930					1	mg/L	lbs			(b)
u. Molybdenum, Total (7439-98-7)		X	<5	<4.1					1	µg/L	lbs			
v. Manganese, Total (7439-96-5)	X		3	2.46					1	µg/L	lbs			(b)
w. Tin, Total (7440-31-5)		X	<7	<5.75					1	µg/L	lbs			
x. Titanium, Total (7440-32-6)		X	<7	<5.75					1	µg/L	lbs			

CONTINUE ON PAGE

AUG 2 3 1994

EPA I.D. NUMBER (copy from Item 1 of Form 1)	OUTFALL NUMBER
IND000810861	002

CONTINUED FROM PAGE 3 OF FORM 2-C

Form Approved OMB No. 158-R0173

PART C - If you are a primary industry and this outfall contains process wastewater, refer to Table 2c-2 in the instructions to determine which of the GC/MS fractions you must test for. Mark "X" in column 2-a for all such GC/MS fractions that apply to your industry and for ALL toxic metals, cyanides, and total phenols. If you are not required to mark column 2-a *(secondary industries, non-process wastewater outfalls, and non-required GC/MS fractions)*, mark "X" in column 2-b for each pollutant you know or have reason to believe is present. Mark "X" in column 2-c for each pollutant you believe to be absent. If you mark either columns 2-a or 2-b for any pollutant, you must provide the results of at least one analysis for that pollutant. Note that there are seven pages to this part; please review each carefully. Complete one table *(all seven pages)* for each outfall. See instructions for additional details and requirements.

1. POLLUTANT AND CAS NUMBER (If available)	2. MARK 'X'			3. EFFLUENT							4. UNITS		5. INTAKE (optional)		
	a. TESTING REQUIRED	b. BELIEVED PRESENT	c. BELIEVED ABSENT	a. MAXIMUM DAILY VALUE (1) CONCENTRATION	a. MAXIMUM DAILY VALUE (2) MASS	b. MAXIMUM 30 DAY VALUE (if available) (1) CONCENTRATION	b. MAXIMUM 30 DAY VALUE (if available) (2) MASS	c. LONG TERM AVRG. VALUE (if available) (1) CONCENTRATION	c. LONG TERM AVRG. VALUE (if available) (2) MASS	d. NO. OF ANALYSES	a. CONCENTRATION	b. MASS	a. LONG TERM AVERAGE VALUE (1) CONCENTRATION	a. LONG TERM AVERAGE VALUE (2) MASS	b. NO. OF ANALYSES
METALS, CYANIDE, AND TOTAL PHENOLS															
1M. Antimony, Total (7440-36-0)			X												
2M. Arsenic, Total (7440-38-2)		X													(b)
3M. Beryllium, Total, 7440-41-7)			X												
4M. Cadmium, Total (7440-43-9)			X												
5M. Chromium, Total (7440-47-3)			X												
6M. Copper, Total (7550-50-8)		X													(b)
7M. Lead, Total (7439-92-1)			X												
8M. Mercury, Total (7439-97-6)			X												
9M. Nickel, Total (7440-02-0)			X												
10M. Selenium, Total (7782-49-2)			X												
11M. Silver, Total (7440-22-4)			X												
12M. Thallium, Total (7440-28-0)			X												
13M. Zinc, Total (7440-66-6)		X													(b)
14M. Cyanide, Total (57-12-5)			X	<0.01	<8.21					1	mg/L	lbs			
15M. Phenols, Total			X												
DIOXIN															
2,3,7,8-Tetrachlorodibenzo-P-Dioxin (1764-01-6)			X	DESCRIBE RESULTS											

CONTINUE ON REVERSE

AUG 23 1994

CONTINUED FROM THE FRONT

1. POLLUTANT AND CAS NUMBER (if available)	2. MARK 'X'			3. EFFLUENT							4. UNITS		5. INTAKE (optional)		
	a. TEST-ING REQUIRED	b. BELIEVED PRESENT	c. BELIEVED ABSENT	a. MAXIMUM DAILY VALUE		b. MAXIMUM 30 DAY VALUE (if available)		c. LONG TERM AVRG. VALUE (if available)		d. NO. OF ANALYSES	a. CONCENTRATION	b. MASS	a. LONG TERM AVERAGE VALUE		b. NO. OF ANALYSES
				(1) CONCENTRATION	(2) MASS	(1) CONCENTRATION	(2) MASS	(1) CONCENTRATION	(2) MASS				(1) CONCENTRATION	(2) MASS	
GC/MS FRACTION – VOLATILE COMPOUNDS															
1V. Acrolein (107-02-8)			X												
2V. Acrylonitrile (107-13-1)			X												
3V. Benzene (71-43-2)			X												
4V. Bis (Chloromethyl) Ether (542-88-1)			X	As per 46 Federal Register 2264, this analyte was removed from the Priority Pollutant List.											
5V. Bromoform (75-25-2)			X												
6V. Carbon Tetrachloride (56-23-5)			X												
7V. Chlorobenzene (108-90-7)			X												
8V. Chlorodibromomethane (124-48-1)			X												
9V. Chloroethane (75-00-3)			X												
10V. 2-Chloroethylvinyl Ether (110-75-8)			X												
11V. Chloroform (67-66-3)			X												
12V. Dichlorobromomethane (75-27-4)			X												
13V. Dichlorodifluoromethane (75-71-8)			X												
14V. 1,1-Dichloroethane (75-34-3)			X												
15V. 1,2-Dichloroethane (107-06-2)			X												
16V. 1,1-Dichloroethylene (75-35-4)			X												
17V. 1,2-Dichloropropane (78-87-5)			X												
18V. 1,3-Dichloropropylene (542-75-6)			X												
19V. Ethylbenzene (100-41-4)			X												
20V. Methyl Bromide (74-83-9)			X												
21V. Methyl Chloride (74-87-3)			X												

AUG 23 1990

CONTINUED FROM PAGE V-4

EPA I.D. NUMBER (copy from Item I of Form 1)	OUTFALL NUMBER
IND000810861	002

Form Approved OMB No. 158-R0173

1. POLLUTANT AND CAS NUMBER (if available)	2. MARK 'X' a. TESTING REQUIRED	b. BELIEVED PRESENT	c. BELIEVED ABSENT	3. EFFLUENT a. MAXIMUM DAILY VALUE (1) CONCENTRATION	(2) MASS	b. MAXIMUM 30 DAY VALUE (if available) (1) CONCENTRATION	(2) MASS	c. LONG TERM AVRG. VALUE (if available) (1) CONCENTRATION	(2) MASS	d. NO. OF ANALYSES	4. UNITS a. CONCENTRATION	b. MASS	5. INTAKE (optional) a. LONG TERM AVERAGE VALUE (1) CONCENTRATION	(2) MASS	b. NO. OF ANALYSES
GC/MS FRACTION – VOLATILE COMPOUNDS *(continued)*															
22V. Methylene Chloride (75-09-2)			X												
23V. 1,1,2,2-Tetrachloroethane (79-34-5)			X												
24V. Tetrachloroethylene (127-18-4)			X												
25V. Toluene (108-88-3)			X												
26V. 1,2-Trans-Dichloroethylene (156-60-5)			X												
27V. 1,1,1-Trichloroethane (71-55-6)			X												
28V. 1,1,2-Trichloroethane (79-00-5)			X												
29V. Trichloroethylene (79-01-6)			X												
30V. Trichlorofluoromethane (75-69-4)			X	As per 46 Federal Register 2264, this analyte was removed from the Priority Pollutant List.											
31V. Vinyl Chloride (75-01-4)			X												
GC/MS FRACTION – ACID COMPOUNDS															
1A. 2-Chlorophenol (95-57-8)			X												
2A. 2,4-Dichlorophenol (120-83-2)			X												
3A. 2,4-Dimethylphenol (105-67-9)			X												
4A. 4,6-Dinitro-O-Cresol (534-52-1)			X												
5A. 2,4-Dinitrophenol (51-28-5)			X												
6A. 2-Nitrophenol (88-75-5)			X												
7A. 4-Nitrophenol (100-02-7)			X												
8A. P-Chloro-M-Cresol (59-50-7)			X												
9A. Pentachlorophenol (87-86-5)			X												
10A. Phenol (108-95-2)			X												
11A. 2,4,6-Trichlorophenol (88-06-2)			X												

CONTINUE ON REVERSE

AUG 2 3 1984

CONTINUED FROM THE FRONT

1. POLLUTANT AND CAS NUMBER (if available)	2. MARK "X"			3. EFFLUENT							4. UNITS		5. INTAKE (optional)		
	a. TESTING REQUIRED	b. BELIEVED PRESENT	c. BELIEVED ABSENT	a. MAXIMUM DAILY VALUE		b. MAXIMUM 30 DAY VALUE (if available)		c. LONG TERM AVRG. VALUE (if available)		d. NO. OF ANALYSES	a. CONCENTRATION	b. MASS	a. LONG TERM AVERAGE VALUE		b. NO. OF ANALYSES
				(1) CONCENTRATION	(2) MASS	(1) CONCENTRATION	(2) MASS	(1) CONCENTRATION	(2) MASS				(1) CONCENTRATION	(2) MASS	
GC/MS FRACTION – BASE/NEUTRAL COMPOUNDS															
1B. Acenaphthene (83-32-9)			X												
2B. Acenaphtylene (208-96-8)			X												
3B. Anthracene (120-12-7)			X												
4B. Benzidine (92-87-5)			X												
5B. Benzo *(a)* Anthracene (56-55-3)			X												
6B. Benzo *(a)* Pyrene (50-32-8)			X												
7B. 3,4-Benzo-fluoranthene (205-99-2)			X												
8B. Benzo *(ghi)* Perylene (191-24-2)			X												
9B. Benzo *(k)* Fluoranthene (207-08-9)			X												
10B. Bis *(2-Chloro-ethoxy)* Methane (111-91-1)			X												
11B. Bis *(2-Chloro-ethyl)* Ether (111-44-4)			X												
12B. Bis *(2-Chloro-isopropyl)* Ether (39638-32-9)			X												
13B. Bis *(2-Ethyl-hexyl)* Phthalate (117-81-7)			X												
14B. 4-Bromo-phenyl Phenyl Ether (101-55-3)			X												
15B. Butyl Benzyl Phthalate (85-68-7)			X												
16B. 2-Chloro-naphthalene (91-58-7)			X												
17B. 4-Chloro-phenyl Phenyl Ether (7005-72-3)			X												
18B. Chrysene (218-01-9)			X												
19B. Dibenzo *(a,h)* Anthracene (53-70-3)			X												
20B. 1,2-Dichloro-benzene (95-50-1)			X												
21B. 1,3-Dichloro-benzene (541-73-1)			X												

EPA Form 3510-2C (6-80)

CONTINUE ON PAGE V-7

AUG 2 3 1994

CONTINUED FROM PAGE V-6

EPA I.D. NUMBER (copy from Item 1 of Form 1): IND000810861 | OUTFALL NUMBER: 002

Form Approved OMB No. 158-R0173

1. POLLUTANT AND CAS NUMBER (if available)	2. MARK "X" a. TESTING REQUIRED	b. BELIEVED PRESENT	c. BELIEVED ABSENT	3. EFFLUENT a. MAXIMUM DAILY VALUE (1) CONCENTRATION	(2) MASS	b. MAXIMUM 30 DAY VALUE (if available) (1) CONCENTRATION	(2) MASS	c. LONG TERM AVRG. VALUE (if available) (1) CONCENTRATION	(2) MASS	d. NO. OF ANALYSES	4. UNITS a. CONCENTRATION	b. MASS	5. INTAKE (optional) a. LONG TERM AVERAGE VALUE (1) CONCENTRATION	(2) MASS	b. NO. OF ANALYSES
GC/MS FRACTION — BASE/NEUTRAL COMPOUNDS (continued)															
22B. 1,4-Dichlorobenzene (106-46-7)			X												
23B. 3,3'-Dichlorobenzidine (91-94-1)			X												
24B. Diethyl Phthalate (84-66-2)			X												
25B. Dimethyl Phthalate (131-11-3)			X												
26B. Di-N-Butyl Phthalate (84-74-2)			X												
27B. 2,4-Dinitrotoluene (121-14-2)			X												
28B. 2,6-Dinitrotoluene (606-20-2)			X												
29B. Di-N-Octyl Phthalate (117-84-0)			X												
30B. 1,2-Diphenylhydrazine (as Azobenzene) (122-66-7)			X												
31B. Fluoranthene (206-44-0)			X												
32B. Fluorene (86-73-7)			X												
33B. Hexachlorobenzene (118-71-1)			X												
34B. Hexachlorobutadiene (87-68-3)			X												
35B. Hexachlorocyclopentadiene (77-47-4)			X												
36B. Hexachloroethane (67-72-1)			X												
37B. Indeno (1,2,3-cd) Pyrene (193-39-5)			X												
38B. Isophorone (78-59-1)			X												
39B. Naphthalene (91-20-3)			X												
40B. Nitrobenzene (98-95-3)			X												
41B. N-Nitrosodimethylamine (62-75-9)			X												
42B. N-Nitrosodi-N-Propylamine (621-64-7)			X												

CONTINUE ON REVERSE

AUG 23 1990