Indiana Department of Environmental Management
Office of Water Quality
Wetlands Section

Publication Date:
June 4, 2010

Closing Date:
June 25,2010

PUBLIC NOTICE

IDEM ID Number:
2010-206-46-JWR-A

Corps of Engineers ID Number:
Not Available

To all interested parties:

This letter shall serve as a formal notice of the receipt of an application for **Section 401 Water Quality Certification** by the Indiana Department of Environmental Management (IDEM). The purpose of the notice is to inform the public of active applications submitted for water quality certification under Section 401 of the Clean Water Act (33 U.S.C. § 1341) and to solicit comments and information on any impacts to water quality related to the proposed project. IDEM will evaluate whether the project complies with Indiana's water quality standards as set forth at 327 IAC 2.

1. Applicant:
Ms. Laura Hilden
Indiana Department of Transportation
100 N. Senate Avenue, Room N642
Indianapolis, IN 46204

2. Agent:
Ms. Monica Overman
J. A. Barker Engineering, Inc.
320 W. 8th Street, Suite 217
Bloomington, IN 47404

3. Project location:
SE ¼, Section 27, Township 35 North, Range 2 West, LaPorte County, Kingsford Heights and Hamlet USGS Quad.
The project is located on US 35 as it crosses the Kankakee River.

4. Affected waterbody:
Kankakee River and adjacent wetlands

5. Project Description:
The applicant proposes to replace the existing structure carrying US 35 over the Kankakee River with a new bridge on new alignment. The new bridge will be located approximately 60 feet southwest of the existing structure and will require the realignment of US 35 to match the new bridge. As a result of the project, approximately 0.16 acre of forested wetland and 0.28 acre of emergent wetland will receive a discharge of fill material. Additionally, 160 linear feet of the Kankakee River will have riprap discharged for bank protection. As compensatory mitigation for wetland impacts, the applicant proposes to restore 0.64 acre of forested wetland and 0.84 acre of emergent wetland at site located on property owned by the Department of Natural Resources in the southwest quadrant of the project site. Additionally, the existing bridge and road will be removed and the area will be seeded and stabilized. A woody re-vegetation plan will be implemented and consists of planting 85 trees and 36 shrubs. For additional information please visit the following webpage address: http://www.in.gov/idem/6395.htm.

Comment period:
Any person or entity who wishes to submit comments or information relevant to the aforementioned project may do so by the closing date noted above. Only comments or information related to water quality or potential impacts of the project on water quality can be considered by IDEM in the water quality certification review process.

Public Hearing:
Any person may submit a written request that a public hearing be held to consider issues related to water quality in connection with the project detailed in this notice. The request for a hearing should be submitted within the comment period to be considered timely. The request should also state the reason for the public hearing as specifically as possible to assist IDEM in determining whether a public hearing is warranted.

Questions?

Additional information may be obtained from Mr. Jason Randolph, Project Manager, at 317-233-0467. Please address all correspondence to the project manager and reference the IDEM project identification number listed on this notice. Indicate if you wish to receive a copy of IDEM's final decision. Written comments and inquiries may be forwarded to -

Indiana Department of Environmental Management
100 North Senate Avenue
MC65-42 WQS IGCN 1255
Indianapolis, Indiana 46204-2251
FAX: 317/232-8406

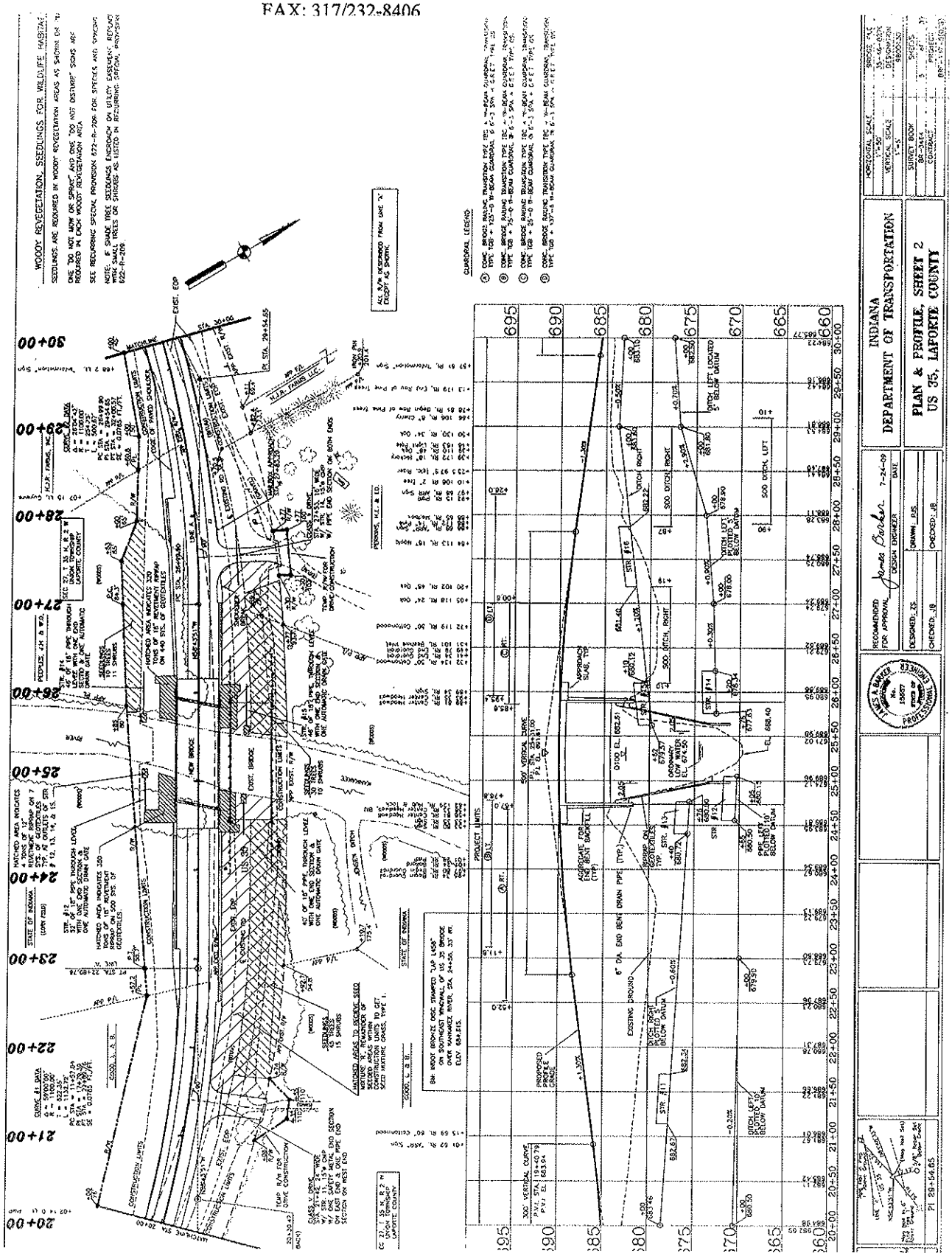

STRUCTURE BUILT ON A 500' VERTICAL CURVE

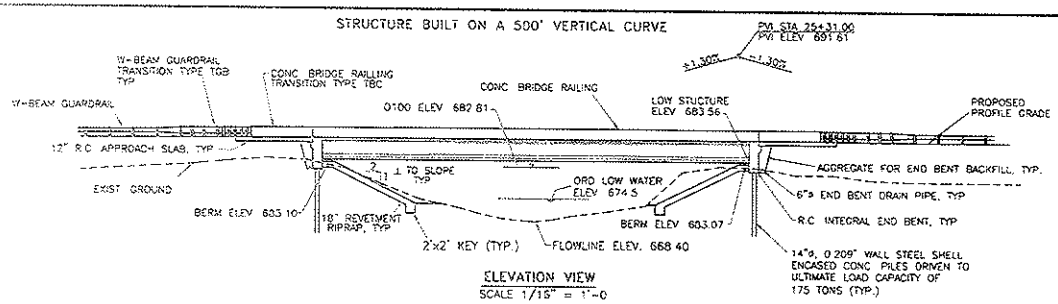

ELEVATION VIEW
SCALE 1/16" = 1'-0

GENERAL NOTES

1. PRESENT STRUCTURE TO BE REMOVED
2. REINFORCING STEEL COVER SHALL BE 2½" AT TOP, 1" AT BOTTOM OF DECK SLAB, AND 2" ELSEWHERE UNLESS OTHERWISE NOTED
3. DUE TO SHEET NUMBERING CHANGES BY INDOT, DISREGARD ANY PLAN SHEET NUMBERS THAT MAY APPEAR IN NOTES
4. THE FOLLOWING AREAS ARE TO BE SURFACE SEALED: THE DECK TOP, SURFACES OF CONCRETE BRIDGE RAILING, FACE OF DECK COPING, UNDERSIDE OF BRIDGE DECK FROM COPING TO OUTSIDE FACE OF EXTERIOR BEAMS

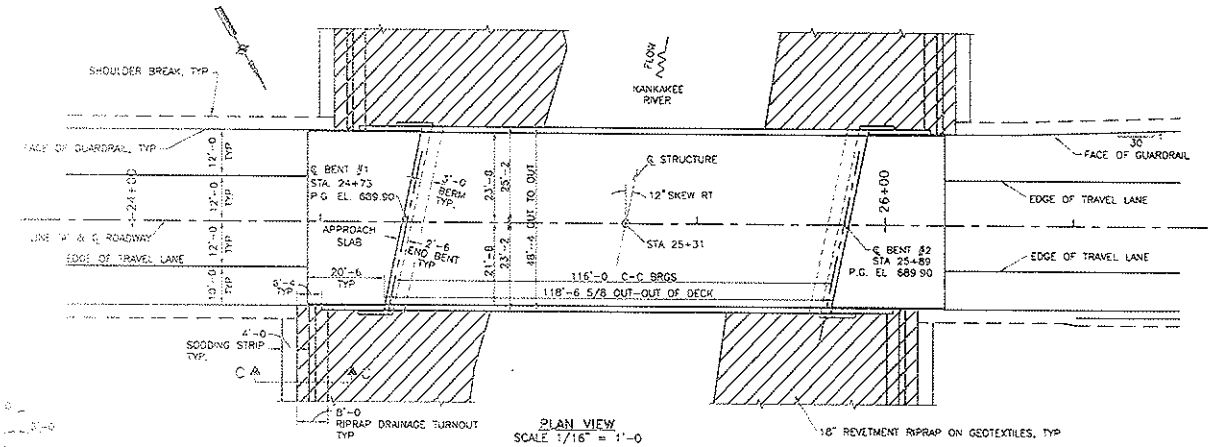

PLAN VIEW
SCALE 1/16" = 1'-0

SECTION C-C
NOT TO SCALE

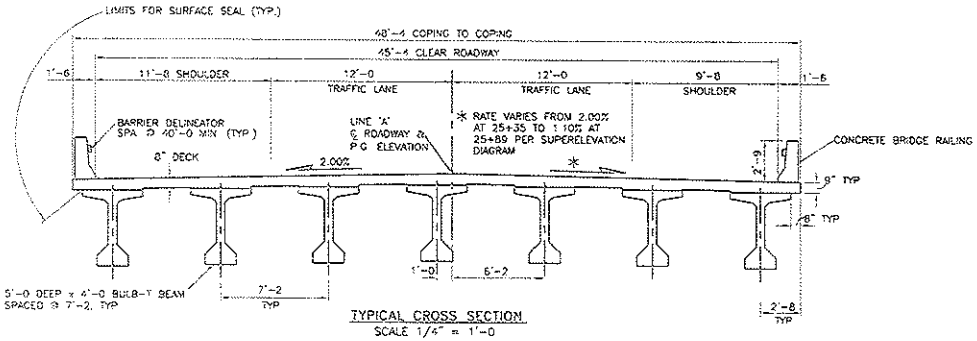

TYPICAL CROSS SECTION
SCALE 1/4" = 1'-0

DESIGN DATA

CONCRETE STRENGTHS, (f'c)
CLASS A = 3,500 psi
CLASS B = 3,000 psi
CLASS C = 4,000 psi

REINFORCING STEEL STRENGTH
(fy = 60,000 psi)

LIVE LOAD
HS20-44 LOADING, AND ALTERNATE MILITARY LOADING IN ACCORDANCE WITH THE 2002 AASHTO SPECIFICATIONS WITH ALL SUBSEQUENT INTERIM SPECIFICATIONS

DEAD LOAD
ACTUAL PLUS 35 psf FOR FUTURE WEARING SURFACE AND 15 psf FOR OPTIONAL METAL DECK FORMS

THE DECK IS DESIGNED WITH A 1.5 IN. SACRIFICIAL SURFACE

5'-0 DEEP x 4'-0 FLANGE BULB-T BEAMS, 12" [illegible] 8" DECK, SINGLE SPAN 116'-0, 45'-4 CLEAR ROADWAY OVER KANKAKEE RIVER ON US 35 IN LAPORTE COUNTY, INDIANA

JAMES A. BARKER
No. 15357
STATE OF INDIANA
PROFESSIONAL ENGINEER

RECOMMENDED FOR APPROVAL James Barker 7-24-09
DESIGN ENGINEER DATE

DESIGNED ZS | DRAWN PJS
CHECKED JB | CHECKED JB

INDIANA
DEPARTMENT OF TRANSPORTATION

GENERAL PLAN
US 35, LAPORTE COUNTY

HORIZONTAL SCALE AS NOTED
VERTICAL SCALE AS NOTED
SURVEY BOOK
BR-3464
CONTRACT
R-29732

Wetland Impacts

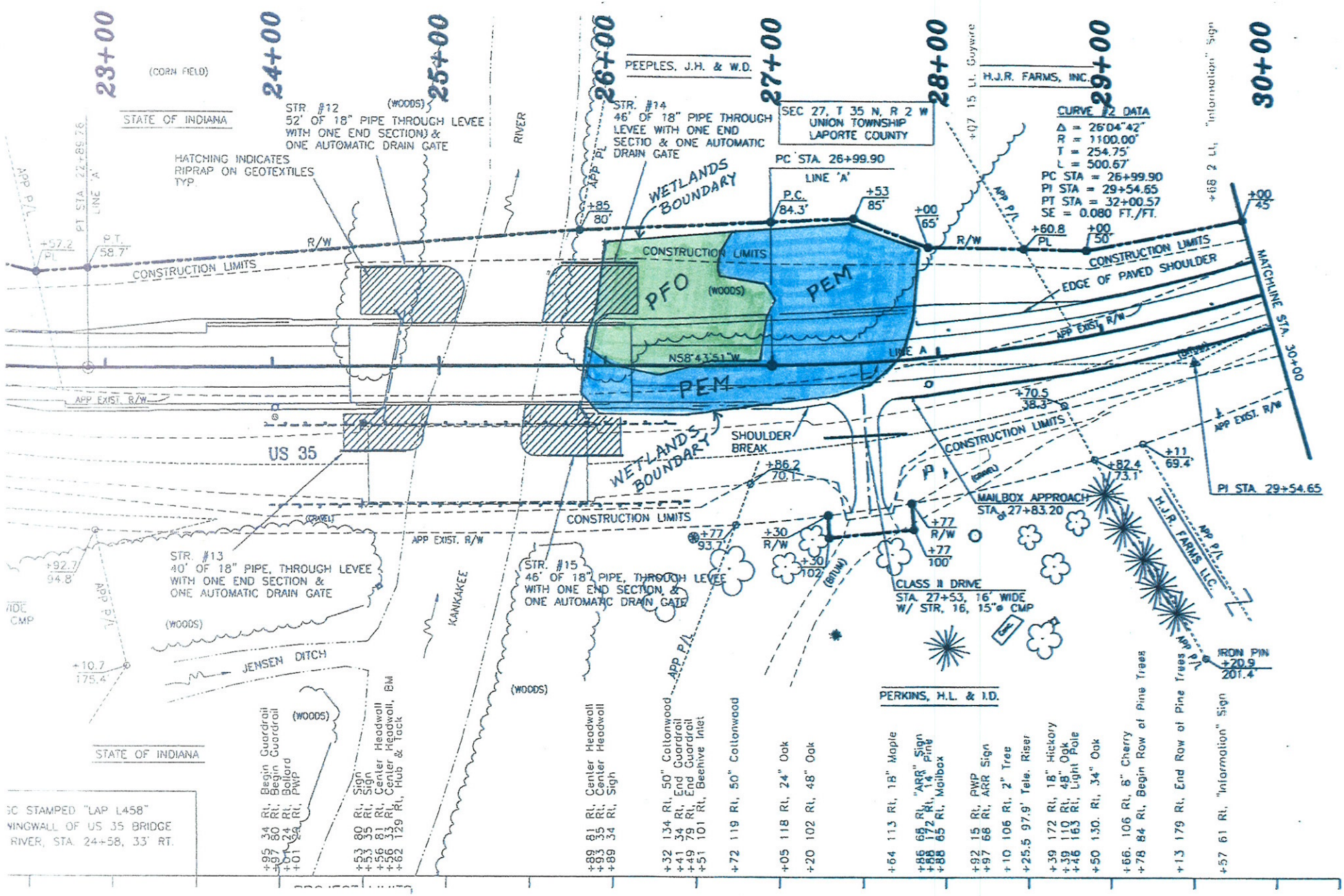

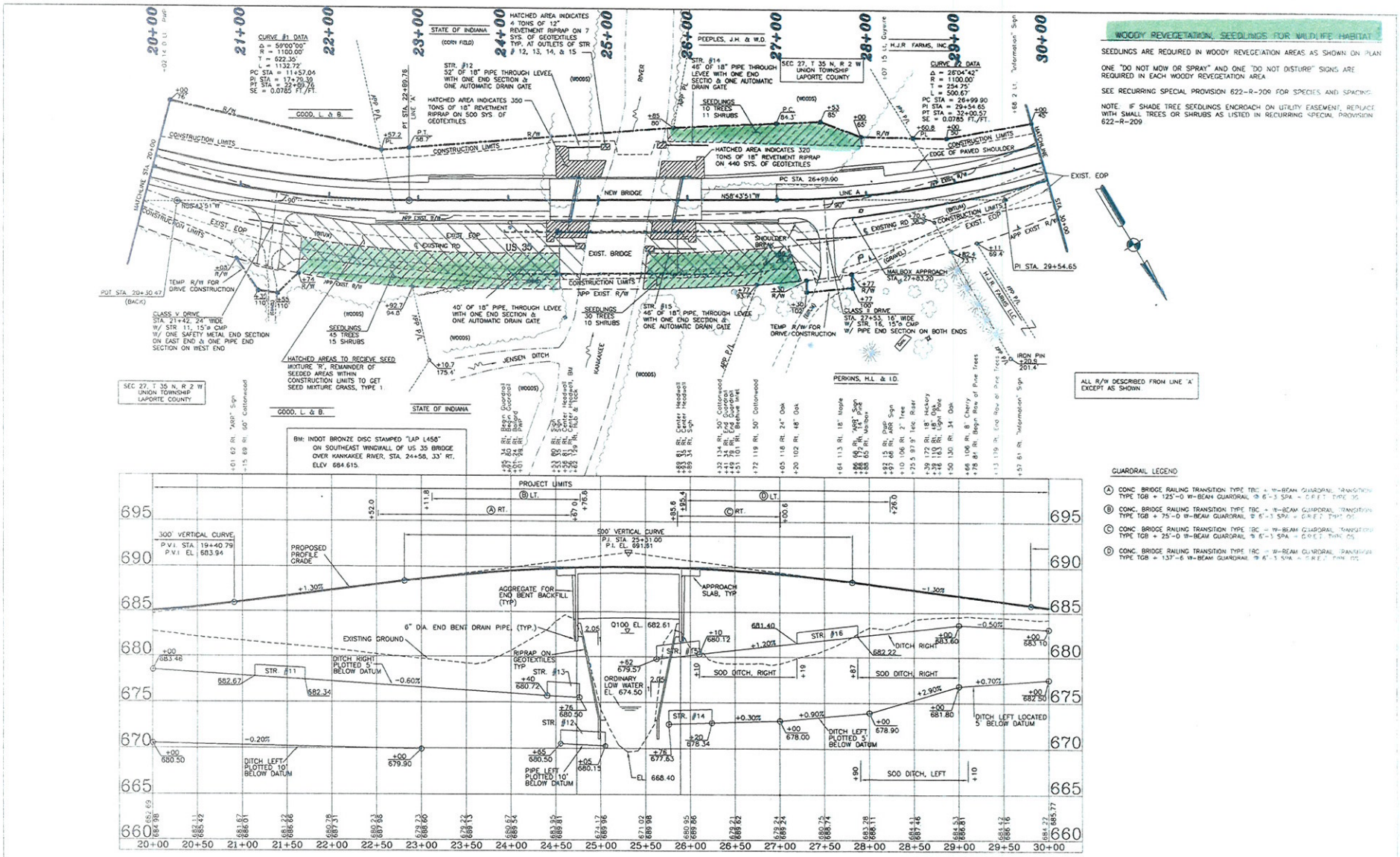

WOODY REVEGETATION, SEEDLINGS FOR WILDLIFE HABITAT

SEEDLINGS ARE REQUIRED IN WOODY REVEGETATION AREAS AS SHOWN ON PLAN

ONE "DO NOT MOW OR SPRAY" AND ONE "DO NOT DISTURB" SIGNS ARE REQUIRED IN EACH WOODY REVEGETATION AREA

SEE RECURRING SPECIAL PROVISION 622-R-209 FOR SPECIES AND SPACING

NOTE: IF SHADE TREE SEEDLINGS ENCROACH ON UTILITY EASEMENT, REPLACE WITH SMALL TREES OR SHRUBS AS LISTED IN RECURRING SPECIAL PROVISION 622-R-209

ALL R/W DESCRIBED FROM LINE "A" EXCEPT AS SHOWN

GUARDRAIL LEGEND

(A) CONC. BRIDGE RAILING TRANSITION TYPE TBC + W-BEAM GUARDRAIL TRANSITION TYPE TGB + 125'-0 W-BEAM GUARDRAIL @ 6'-3 SPA. + GREET TYPE 35

(B) CONC. BRIDGE RAILING TRANSITION TYPE TBC + W-BEAM GUARDRAIL TRANSITION TYPE TGB + 75'-0 W-BEAM GUARDRAIL @ 6'-3 SPA. + GREET TYPE 35

(C) CONC. BRIDGE RAILING TRANSITION TYPE TBC + W-BEAM GUARDRAIL TRANSITION TYPE TGB + 25'-0 W-BEAM GUARDRAIL @ 6'-3 SPA. + GREET TYPE 35

(D) CONC. BRIDGE RAILING TRANSITION TYPE TBC + W-BEAM GUARDRAIL TRANSITION TYPE TGB + 137'-6 W-BEAM GUARDRAIL @ 6'-3 SPA. + GREET TYPE 35

POT 20+30.47 Back	Pi 29+54.65				

RECOMMENDED FOR APPROVAL James Barker 7-24-09
DESIGN ENGINEER DATE

DESIGNED: ZS DRAWN: PJS
CHECKED: JB CHECKED: JB

JAMES A. BARKER No. 15557 STATE OF INDIANA PROFESSIONAL ENGINEER

INDIANA DEPARTMENT OF TRANSPORTATION

PLAN & PROFILE, SHEET 2
US 35, LAPORTE COUNTY

HORIZONTAL SCALE 1"=50'	BRIDGE FILE 35-46-8270
VERTICAL SCALE 1"=5'	DESIGNATION 9800130
SURVEY BOOK BR-3464	SHEETS 6 of 30
CONTRACT	PROJECT BRF-1(37)-5(031)

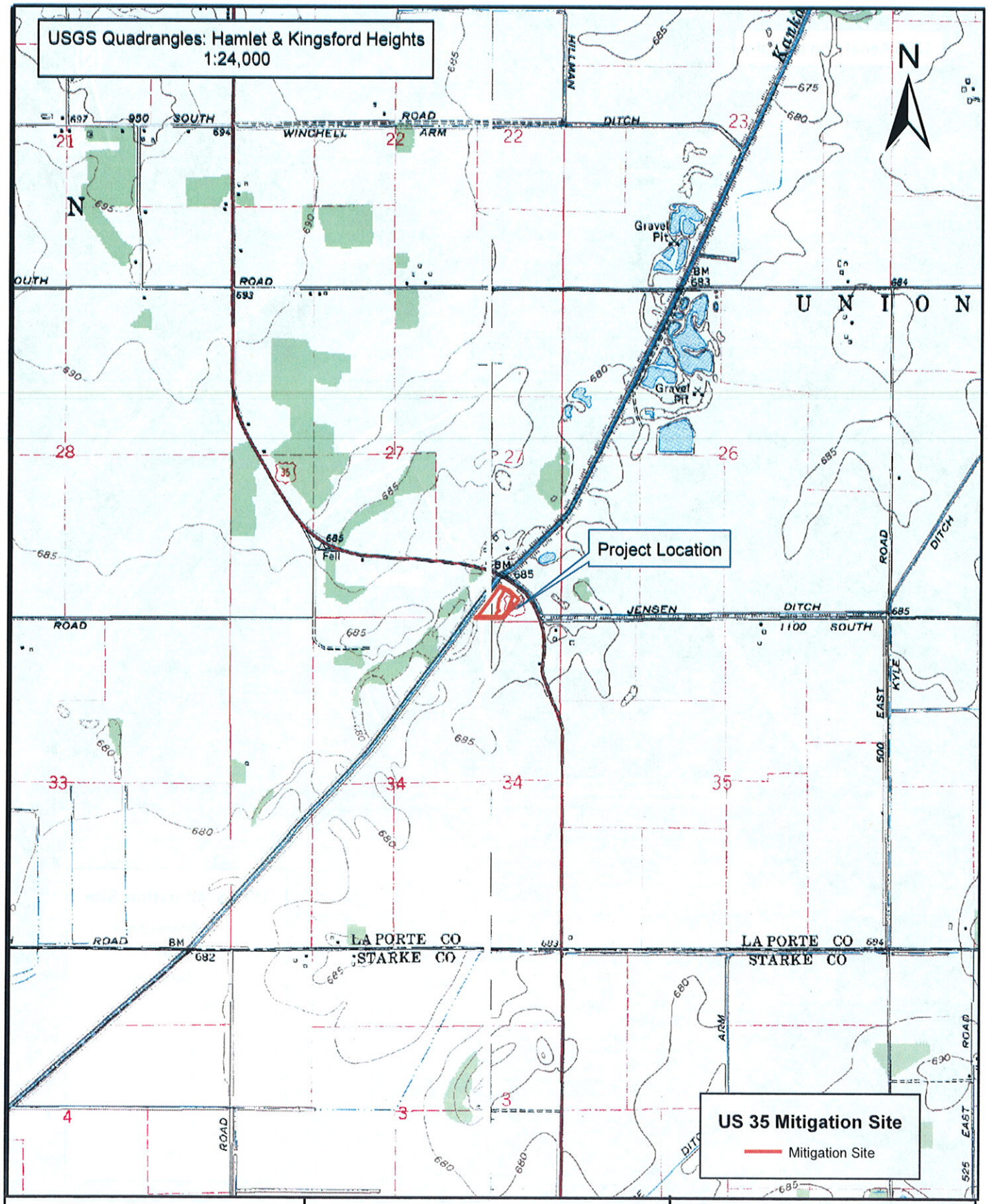

BERNARDIN LOCHMUELLER & ASSOCIATES, INC.
3502 Woodview Trace, Suite 150
Indianapolis, IN 46268
Phone: (317) 222-3880
Fax: (317) 222-3881

USGS Topographic Map

0 1,000 2,000 4,000 Feet

Location: US 35
County: LaPorte
Township: Union
State: IN
Date: 1/27/2010

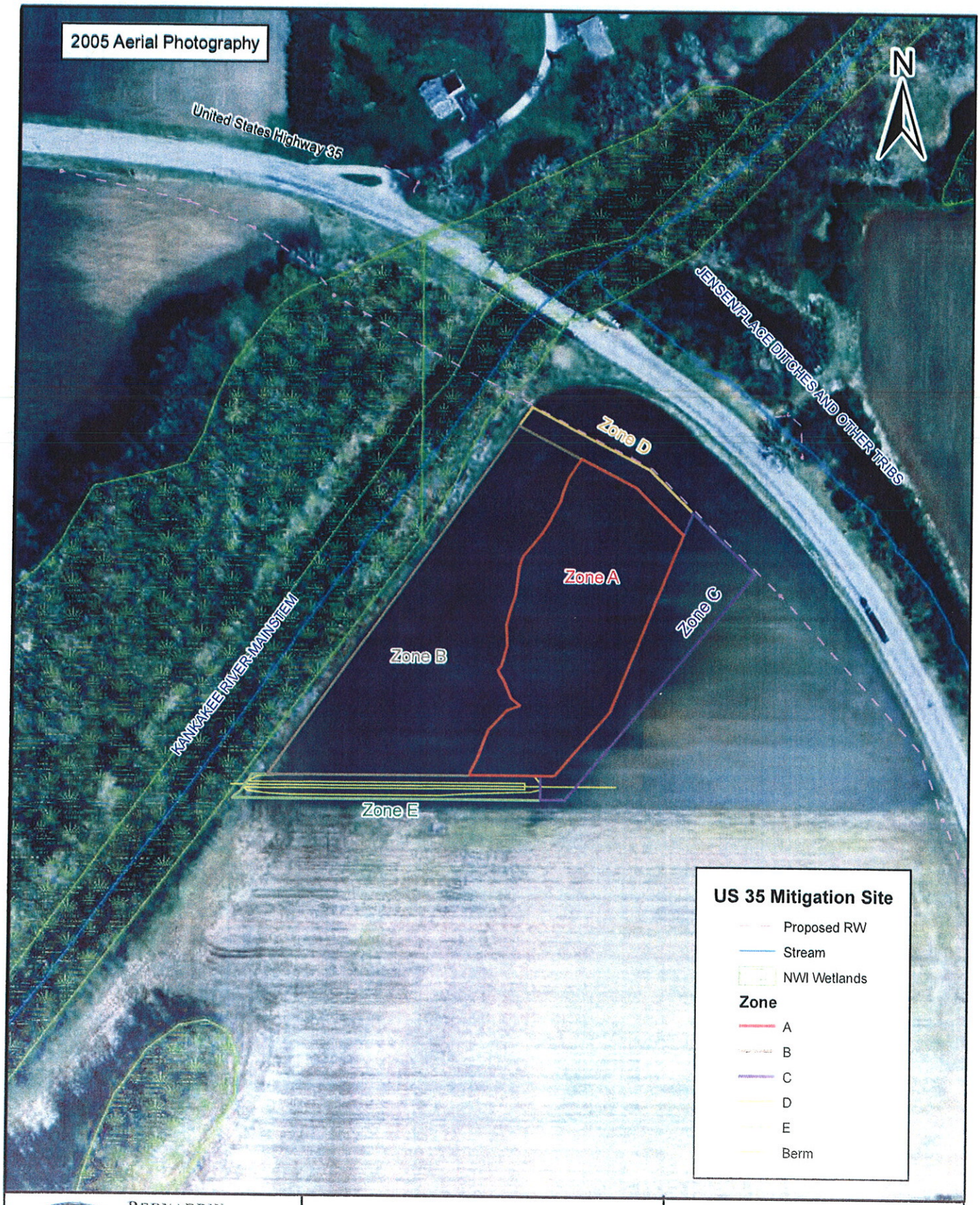

BERNARDIN LOCHMUELLER & ASSOCIATES, INC.
3502 Woodview Trace, Suite 150
Indianapolis IN 46268
Phone (317) 222-3880
Fax (317) 222-3881

US 35 Mitigation Site

0 100 200 400 Feet

Location: US 35
County: LaPorte
Township: Union
State: IN
Date: 1/27/2010

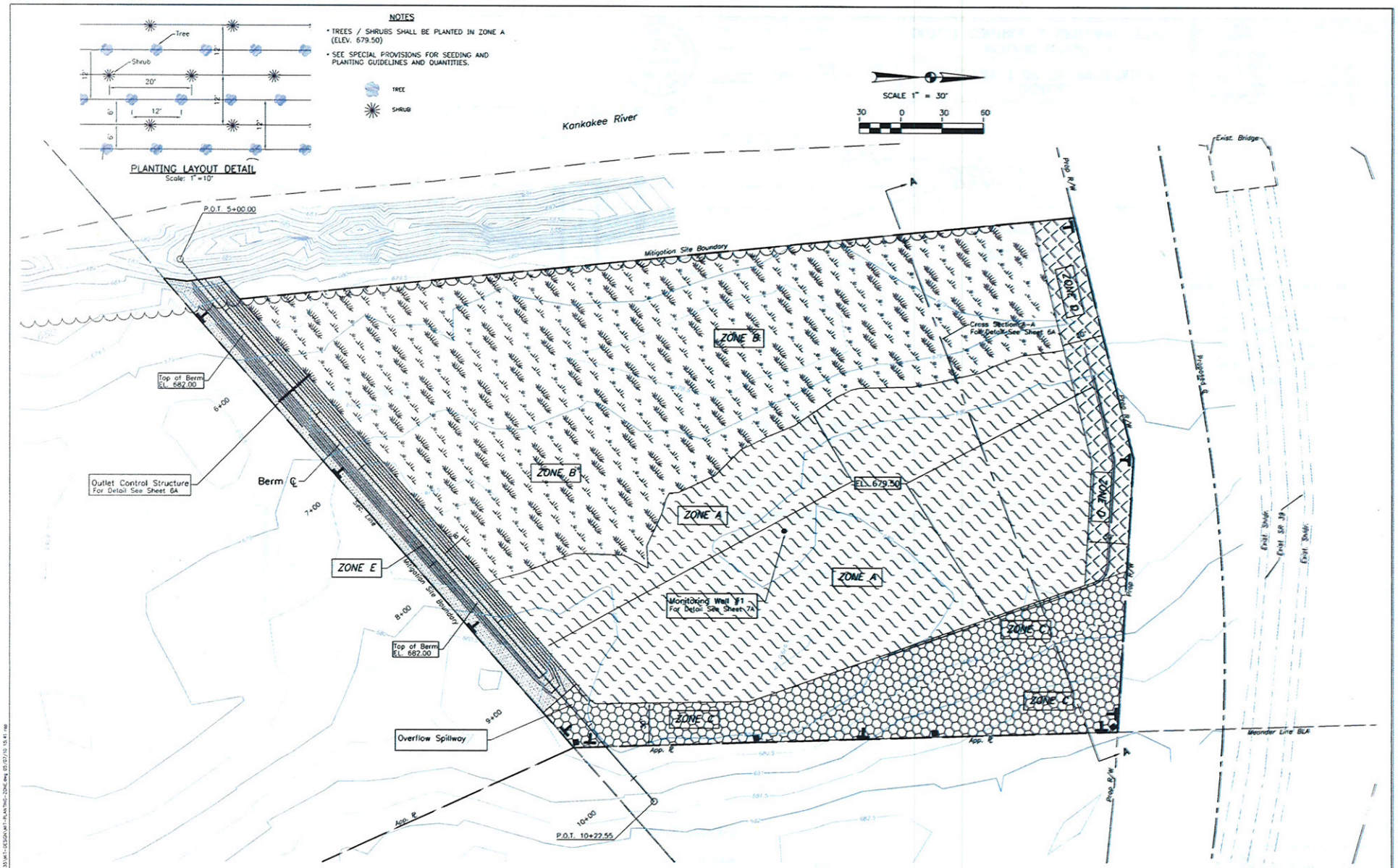

NOTES

- FOR BERM DETAILS SEE SHEET 6A
- SEC A-A: FOR DETAIL SEE SHEET 6A

[FOR ADDITIONAL INFORMATION ON PLANTING ZONES SEE STREAM PROFILE/MISC DETAILS SHT. 6A]

ZONE LEGEND

- ZONE A – FORESTED WETLAND AREA
- ZONE B – EMERGENT WETLAND AREA
- ZONE C – PRAIRIE BUFFER AREA
- ZONE D – WET PRAIRIE BUFFER AREA
- ZONE E – BERM
- SIGN, "DO NOT MOW OR SPRAY"
- 4"x4" WOOD DELINEATOR POST

454 Trees
274 Shrubs
> Equal mix of 3-Gallon containerized and Bareroot

JASON A. DUPONT REGISTERED No. PE10303058 STATE OF INDIANA PROFESSIONAL ENGINEER

RECOMMENDED FOR APPROVAL: Jason A. DuPont 03/31/10 — DESIGN ENGINEER — DATE

DESIGNED: K.C. | DRAWN: R.A.P.
CHECKED: J.A.D. | CHECKED: M.T.R.

INDIANA DEPARTMENT OF TRANSPORTATION

WETLAND MITIGATION PLANTING ZONE DETAIL

HORIZONTAL SCALE	BRIDGE FILE
1" = 30'	35-46-8270
VERTICAL SCALE	DESIGNATION
---	980031.30
SURVEY BOOK	SHEETS
	5A of
CONTRACT	PROJECT
29732	BRF-147-5(053)