INDOT Structures Conference 2010

Structure Size and Type

Benjamin Borcherding, P.E.

Objectives

- Choose an appropriate structure for project site
- Select a cost effective structure
- Develop recommended alternate to be used for final design

Timeline

- Significant portion of bridge design Stage I submission
- Concurrent with/or following roadway design Stage I submission
- Following hydraulic approval

Resource Information

- Indiana Design Manual
  - Chapter 59, Structure Type and Size
  - Chapter 14, Plan Development – PDP version
- Engineer's Report
- Project Scope
- Past Projects

Evaluation Factors

- Project location and site characteristics
  - Hydraulic and geotechnical considerations
- Geometrics
  - Alignments/Profiles
  - Right-of-way restrictions
- Environmental Restrictions
  - Environmental commitments
  - Wetlands

Evaluation Factors

- Aesthetics
  - CSS considerations
  - Regional preference
- Cost
  - Construction cost
  - Maintenance cost
- Other factors
  - Future transportation plans
  - Future rehabilitation methods

Structure Sizing

- Geometrics
  - Coordination with roadway design required
  - Horizontal alignment
    - Ideally, no superelevation transition
  - Vertical profile
    - 0.5% minimum grade
    - No sag curve on bridge

Structure Sizing

- Geometrics continued
  - Clear roadway width
    - Barrier offset requirements
    - Curved alignment
  - Required minimum vertical clearance
    - Roadway based on functional classification
    - Railroad (specific requirements)

Structure Sizing

- Hydraulic Analysis
  - Coordination with hydraulics report and approval
  - Required waterway opening
  - Required freeboard
  - Allowable backwater (0.14 feet for new construction)
  - Channel clearing (IDM 32-3.02(08))

Structure Types

- Grade separation crossings
  - Spill-through type
  - MSE wall abutments
  - C.I.P. concrete tall abutment
- Waterway crossings
  - Generally spill-through type
  - Three-sided structures or box culverts

Grade Separation:
Spill Through Configuration

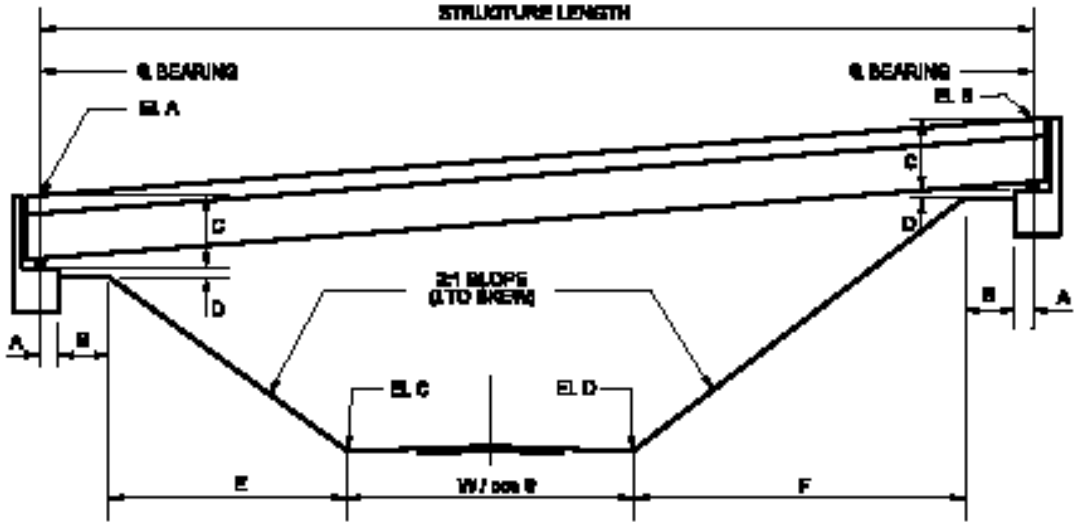

SECTION A-A

(PARALLEL TO ℄ STRUCTURE)

A = (Distance from bearing to front face of cap) / cos
B = (Width of bent) / cos
C = Construction depth plus height of bearing pad
D = Distance from top of cap to bent elevation
E = (2) (EL A - C - D - EL C) / cos
F = (2) (EL B - C - D - EL D) / cos
W = Width of traveled way plus width of obstruction-free or clear zone
EL A = Elevation of top of slab
EL B = Elevation of top of slab
EL C = Elevation of toe of slope
EL D = Elevation of toe of slope

Note: Interior supports are not shown.

STRUCTURE LENGTH FOR HIGHWAY CROSSING
(Beam Type Superstructure)

Figure 80-1K

Grade Separation:
Spill Through Configuration

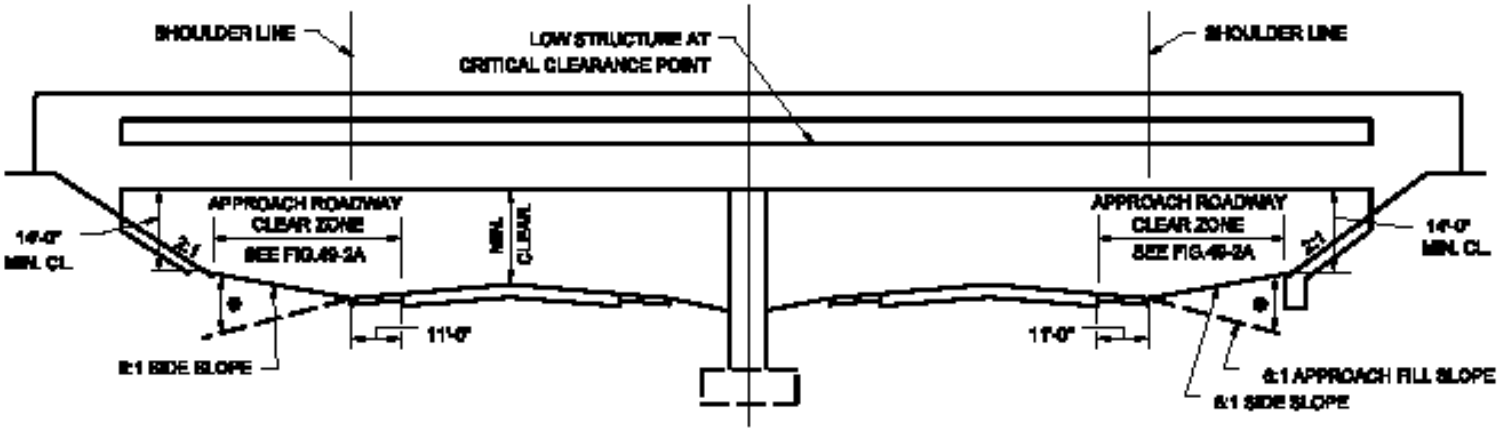

TANGENT SECTION

* SEE SECTION 49-3.05(03) FOR SPILLSLOPE TRANSITIONS.

NOTE: MEDIAN PIER PROTECTION SHOULD BE PROVIDED.

BRIDGE UNDERPASS CROSS SECTION
(New Construction/4R Project)

Grade Separation:
Spill Through Configuration

- 2:1 concrete slopewall with toe of slope at clear zone
- Maintain vertical clearance
  - Per IDM, based on functional classification
  - Including 14' minimum within clear zone
- Satisfy recommended distance between berm and bottom of beam
- 8:1 slope up to berm from edge of shoulder

Grade Separation:
MSE Wall/Deep Abutment Configuration

- Generally walls should be located at clear zone plus 1'
- In urban areas, CZ + 1' may not be possible or economical
  - Roadside protection must be provided
- Design memo # 10-04 - memo pertaining to protection of MSE walls
- Consider barrier width and desired distance between barrier and wall in structure length determination
- Consult INDOT Structural Services for atypical situations

Waterway Crossing:
Spill Through Configuration

- Refer to the hydraulic model/report and approval letter
- Waterway area provided below Q_{100} must be ≥ waterway area required
- Desired freeboard shall be achieved
  - Generally 2'
  - 3' for major waterways
- Follow IDM section 32-3.02(08) For channel clearing limitations above ordinary high water elevation

Waterway Crossing:
Spill Through Configuration

INDIANA DEPARTMENT OF TRANSPORTATION
Driving Indiana's Economic Growth

100 North Senate Avenue
Room N758
Indianapolis, Indiana 46204-2216 (317) 232-3166 FAX: (317) 232-0238

Mitchell E. Daniels, Jr., Governor
Michael W. Reed, Commissioner

March 26, 2010

MEMORANDUM

TO: Ron Heustis
Project Manager

FROM: Bill P. Schmidt, P.E.
Hydraulics Engineer

SUBJECT: HYDRAULICS REVIEW
Structure: I-69; Section 2, Segment 1, in Gibson County
Station: 162+00
Des. #: 0902089
Project: new alignment bridge
Crossing: East Fork of Keg Creek
Consultant: Parsons Brinckerhoff

I69 over East Fork Keg Creek (Sta. 161+30) 0.14 ft. backwater condition
The proposed multi-span spill-through bridge is approved.

Drainage Area =	10.6	sq. mi.
Q100 =	3200	cfs
Q100 Elevation =	417.96	ft.
Approximate Skew =	30	degrees
Proposed Gross Waterway Area (below Q100 Elev) =	2217	sq.ft.
Proposed Road Overflow Area =	0	sq.ft.
Proposed Velocity =	1.46	ft/s
Proposed Backwater/Surcharge =	0.14	ft.
Required Low Structure Elev =	420.0	ft.
Proposed Low Structure Elev =	421.0	ft.

Proposed Scour Data

Q100 Contraction Scour =	0.30	ft.
Q100 Total Scour =	6.30	ft.
Q100 Low Scour Elevation =	400.27	ft.
Q100 Max Velocity =	5.30	ft/s.
Q500 =	5440	cfs
Q500 Elevation =	418.86	ft.
Q500 Contraction Scour =	1.25	ft.
Q500 Total Scour =	7.28	ft.
Q500 Low Scour Elevation =	399.29	ft.
Q500 Max Velocity =	6.12	ft/s

The waterway opening is normal to the direction of flow. The data is based on a flowline elevation of 406.57 ft. The scour data is based on erodible materials. The maximum velocity is the highest velocity value that would occur within the channel.

Structure Size and Type

Waterway Crossing:
Spill Through Configuration

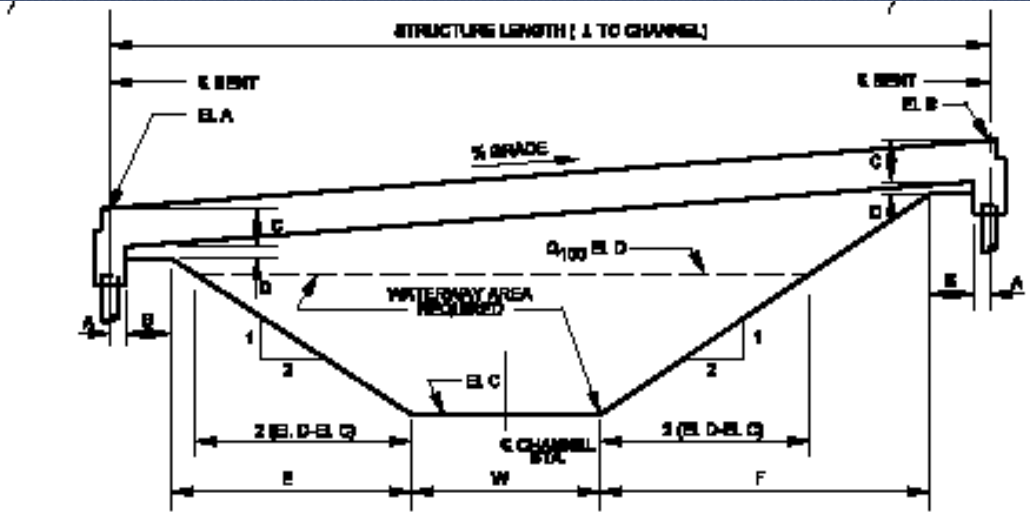

SECTION A-A

(PERPENDICULAR TO CHANNEL)

A = One half of the cap width
B = Width of berm
C = Anticipated thickness of reinforced concrete slab
D = Distance from bottom of slab to berm elevation
E = (2) (El. A - C - D - El. C)
F = (2) (EL B - C - D - EL C)
W = Width of channel (perpendicular to channel)
EL A = Elevation of top of slab
EL B = Elevation of top of slab
EL C = Bottom of channel elevation

Note: Waterway Area Required will be determined in the waterway opening analysis. Interior supports are not shown.

Waterway Crossing:
Spill Through Configuration

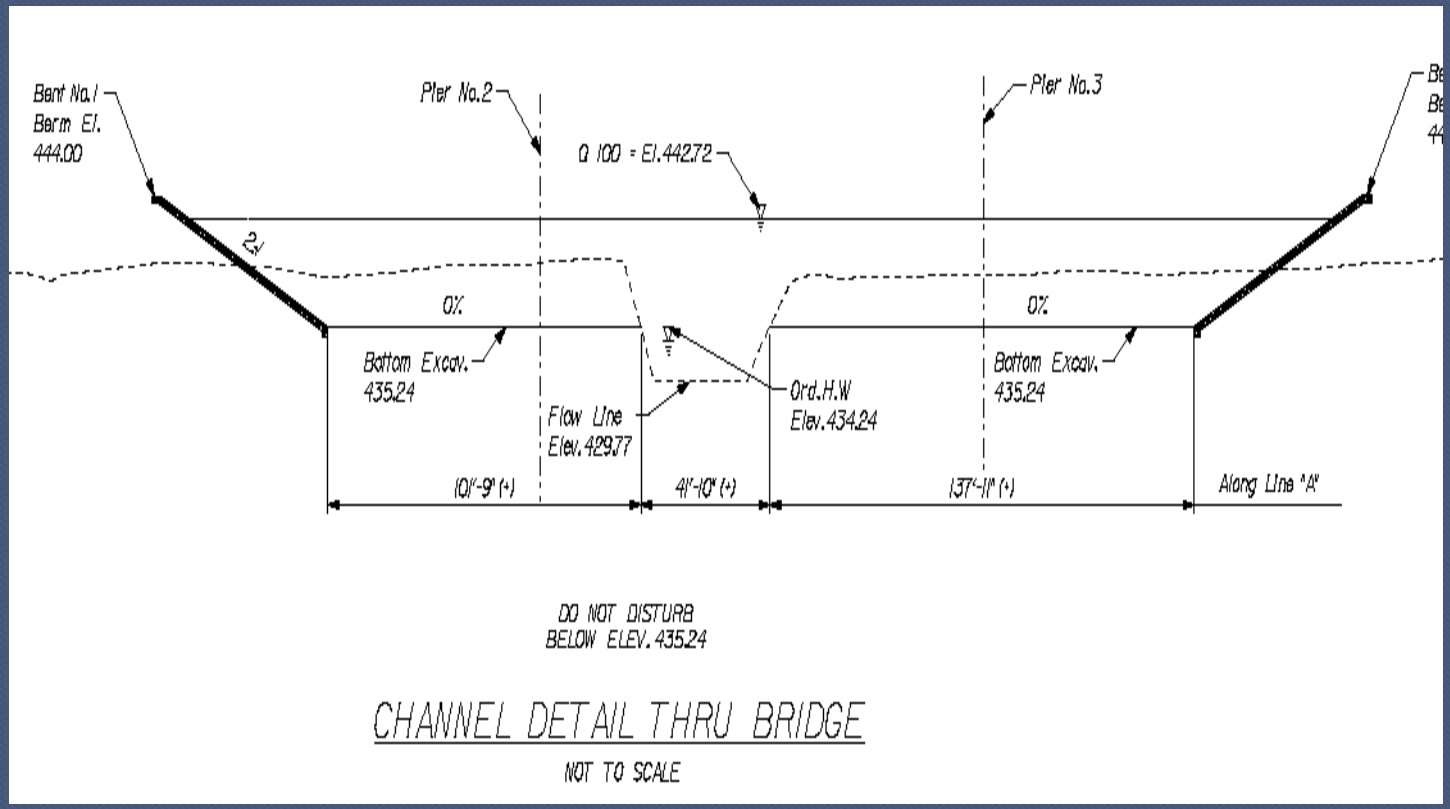

Waterway Crossing:
Three-sided and Box Culverts

- Refer to the hydraulic model/report and approval letter
- Waterway area required and desired freeboard area must be achieved
- Refer to design memo # 09-27 for culvert sumping requirements and details
- For three-sided structures, analyze a flat-top and an arch-top where applicable

Superstructure Types

- IDM Chapter 59
  - Typical superstructure types and characteristics
  - Applicability and typical span lengths

- Three-sided and box culverts may be used for small waterway crossings where hydraulic requirements can be met

Superstructure Types

- Typical superstructure types for short spans
  - R.C. slab (Typically < 50' spans)
    - Constant depth
    - Variable depth
  - Prestressed, precast concrete I-beams (< 80' spans)
  - Composite steel rolled beams (<100' spans)
  - Prestressed, precast concrete box-beams (some applications)
- Typical superstructure types for medium-long spans
  - Prestressed, precast concrete bulb-tees (< 150' spans)
  - Composite steel plate girders

Superstructure Types

- Other superstructure types that may be considered for long spans (> 150' spans)
  - Post-tensioned bulb-tees
  - Post-tensioned box girders
  - Composite steel box girders
  - Segmental structures (very large spans and large crossing depth)

Superstructure Types

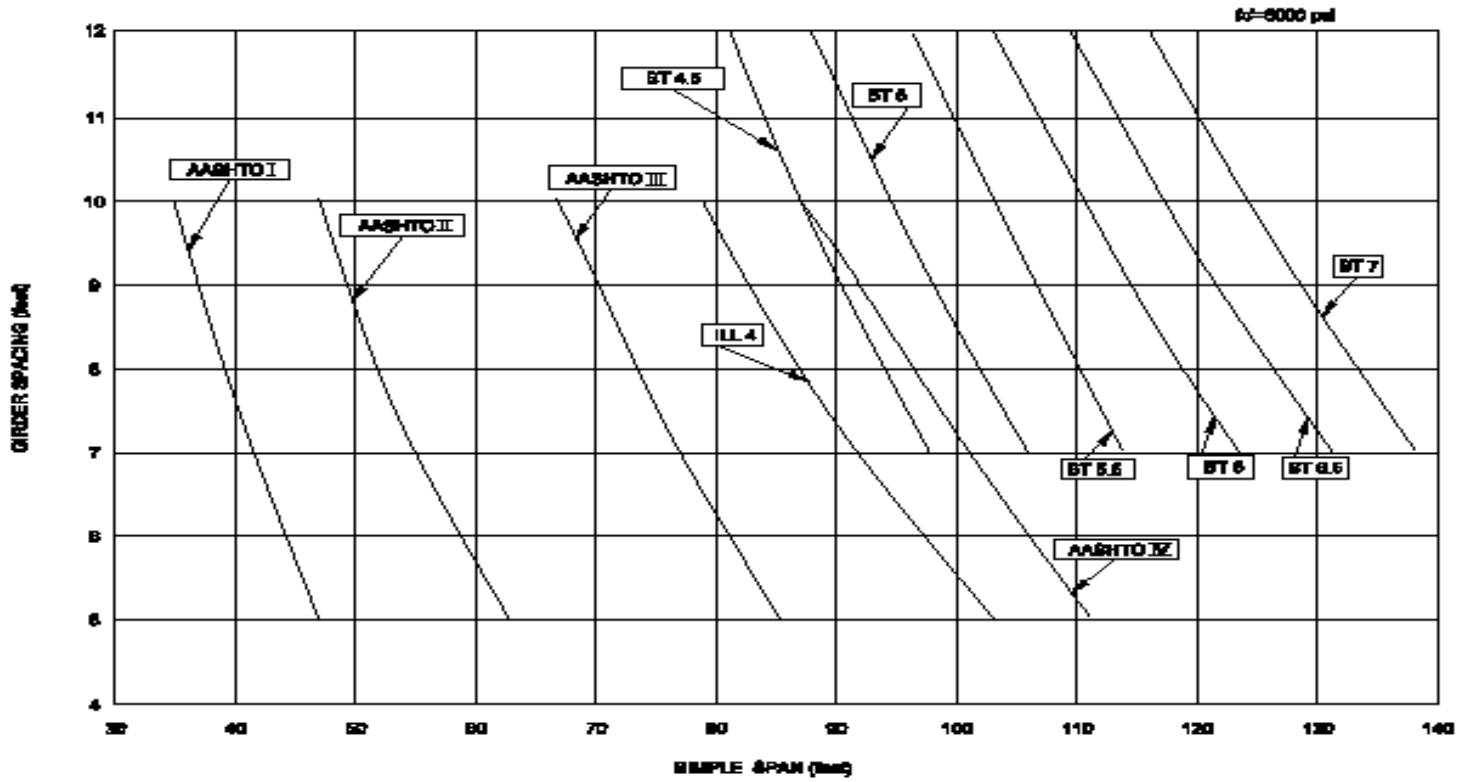

PRESTRESSED CONCRETE I-BEAM SELECTION CHART

Figure 59-3K

Superstructure Types

- Additional considerations in selecting superstructure types
  - Horizontally curved alignment
  - Precast member delivery access
  - Falsework location restrictions
  - Material strengths and availability
  - Special inspection requirements

Substructure Type

- End bent types can be selected based on the structure size and configuration determined (Typical details in IDM)
  - Integral end bents
    - Preferred
    - Should be specified whenever expansion length and skew limits are met
  - Semi-integral end bents
    - Should be used when integral limits are exceeded, but design does not warrant an expansion joint
  - Expansion end bents
    - To be used when integral and semi-integral end bents are not structurally feasible

Substructure Type

- Pier types
  - Wall type piers
    - Grade separation structures
    - Narrow waterway crossings
  - Hammerhead pier
    - Waterway crossings
  - Extended pile bents
    - Smaller span reinforced concrete slab bridges
  - Frame bent

Foundation Type

- At SST, typically geotechnical information is unavailable
- Foundation type can be assumed at SST stage based on regional geology and nearby structures
- Same foundation type can be assumed for each structure alternate analyzed
  - Pile foundation
  - Drilled shaft foundation
  - Spread footing foundation
- Scour considerations

Structure Analysis

- Determine plausible alternates to be evaluated in detail
  - Spill slope versus MSE wall configuration
  - Prestressed beam versus steel girder
  - Indiana bulb-tee versus "hybrid" bulb-tee
  - Three-sided structure versus bridge
- Base analysis on evaluation factors
  - Cost - the most influential factor

Economic Analysis

- Significant factor in selecting structure type
  - Compute quantities of all alternates evaluated
  - Only quantities common to each alternate shall be computed
  - Consider roadway quantities that are dependent on structure size and type
    - *Example: Additional roadway fill for deeper structure alternate*
  - Use recent cost data for unit prices
    - Recent construction letting bid tabulations
    - INDOT Website – Recent price summaries database

SST Documentation

- Report narrative
  - Brief description of project
  - Evaluation Factors
    - Geotechnical considerations
    - M.O.T.
    - Environmental
  - Structure alternate descriptions
  - Recommended alternate discussion
    - List reasons for selecting recommended alternate

SST Documentation

- Structure size calculations
  - Length determination
  - Vertical clearance calculations
  - Drawings/sketches of alternates
- Economic Analysis
- Calculations
  - Summaries of design calculations
    - *Example: Beam design output*
  - Guardrail length of need calculations
  - Miscellaneous calculations

Stage I Submission

- SST documentation is a portion of Stage I
- Additional Stage I documentation
  - QA form
  - Scope/environmental compliance certification
  - Level one check list
  - Construction cost estimate of recommended alternate
  - Stage I bridge plans

Stage I Plans

- Title sheet
- Index sheet
- Roadway "For Information Only" sheets
  - Typical cross sections
  - Plan and profiles
  - Geometric layouts
  - Superelevation diagrams
- Layout
- Channel change layout
- General plan
- Bridge summary
- Cross sections

Alternate Superstructure Design

- Necessary if structures deck area is greater than 20,000 sq. ft.
- Cost analysis for one concrete and two steel superstructure alternates
- Cost analysis criteria discussed in IDM chapter 59
- If estimated cost exceeds 10 million dollars, both a steel and concrete alternate should be designed

Helpful Hints for SST Process

- Stay current with the following:
  - Recent unit prices
  - INDOT design standards and memorandums
  - Recent INDOT projects

Questions?