STRUCTURES CONFERENCE

2010

WELCOME

AGENDA

- INDOT Updates
- Structure Size and Type
- Concrete Superstructures
- Steel Superstructures
- Substructures
- LRFD Geotechnical
- Bridge Decks and Railings

INDOT UPDATE

- Policy
- Design Manual
- Procedure

POLICY

INDOT Standard-Documents Websites

- **Design Memoranda:**

  http://www.in.gov/dot/div/contracts/standards/memos/memos.html

MASONRY COATING

Masonry Coating

- ***Masonry coating should no longer be specified. If it is being considered for aesthetics, dyes or tints should be considered instead.***

Masonry Coating

- ***A unique special provision will be required to address this work.***

Masonry Coating

- ***It doesn't work! After as little as two years, it spalls, peels, discolors, and gets ugly.***

Masonry Coating

- ***It should not be specified for an INDOT, or federal-aid local bridge project.***

Masonry Coating

- ***It can be specified for a 100% locally-funded bridge project.***

BRIDGE-PAINTING SUMMARIZATION

Bridge-Painting Summarization

- ***Summarization 17-5K has been revised to include locations for providing the structure type and estimated bridge-deck area.***

Bridge-Painting Summarization

- ***It appears on the Department's Design Manual website, and also the editable-documents website.***

Summarization 17-5K

Bridge-Painting Locations and Information								
Contract Structure Number	Route Number	Structure Number	NBI Number	Ref. Post	County	Feature Crossed	Location	No. of Spans

										Surface Seal		Drainage	
Contract Structure Number	Lengths of Strl.-Steel Spans ft-in. *	Existing Primer Type	Year Last Painted	Year Built	Tons of Strl. Steel **	Surf. Area Strl. Steel, ft^2 **	New-Paint Color	Structure Type: 1,2, or 3	Deck Area, ft^2 **	No. Int. Supts.	No. End Supts.	Clean & Paint Castings	PVC Drain Extensions

* Length shown is approximate.

** The quantities shown are approximate only. The Contractor shall have determined the quantities upon which to have based the unit prices.

Bridge-Painting Summarization

- ***Design Memorandum 09-08 Technical Advisory includes more information.***

PILING
PAY ITEMS

Piling Pay Items

- ***Pay-item names for pile shells have been changed to pipe piles, along with other pay-item-name changes.***

Piling Pay Items

- ***Each structure's pile types, and the need for other piling-related work will still be specified in the geotechnical report.***

Piling Pay Items

- ***However, piling-related work will be specified based on the pay items shown in new Standard Specifications Section 701.***

Piling Pay Items

- ***The design requirements shown in the Indiana Design Manual are unchanged.***

2008 STANDARD SPECIFICATIONS PAY ITEM	2010 STANDARD SPECIFICATIONS PAY ITEM
Cored Hole in Rock, ____ in.	[same]
Dynamic Pile Load Test	[same]
[nonexistent]	Pile, Concrete, _____ in. x _____ in.
[nonexistent]	Pile, Prestressed Concrete, _____ in. x _____ in.
Pile, Concrete, Steel Shell Encased, _____, _____ shell thickness diameter	Pile, Steel Pipe, _____, _____ pipe-wall thickness diameter
Pile, Reinforced Concrete, Steel Shell Encased, Epoxy Coated, _____, _____ shell thickness diameter	Pile, Steel Pipe, Epoxy Coated, _____, _____ pipe-wall thickness diameter
[nonexistent]	Pile Shoe, _____ _____ x _____ pile type size, if HP
Pile, Steel H, Epoxy Coated, HP _____ x _____ size	[same]
Pile, Steel H, HP _____ x _____ size	[same]
Pile, Steel H, Reinforced Concrete Encased, HP ____ x ____ size	[same]
Pile, Timber, Driven	Pile, Timber
Pile, Timber, Furnished	[deleted]
Pile, Timber, Treated, Driven	Pile, Timber, Treated
Pile, Timber, Treated, Furnished	[deleted]
Pile Tip, _____, _____ pile size type	Conical Pile Tip, _____ diameter
[nonexistent]	Piling, Restock
Static Pile Load Test, _____ pile size	[same]
Test Pile [pay unit: each]	Test Pile, Dynamic, _____, Non-Production [pay unit: LFT (m)] pile size
[nonexistent]	Test Pile, Indicator, _____, Non-Production

Piling Pay Items

- ***Design Memorandum 09-12 Technical Advisory includes more information.***

Piling Pay Items

- ***A recurring special provision which revises the Standard Specifications regarding piling is also included as an attachment to the memorandum.***

Piling Pay Items

- ***When Effective ?***

  INDOT September 1, 2010, Letting.

TEST PILES

Test Piles

Design Memo 10-11, dated March 26, revises Design Manual Section 17-5.03, item 2, and is effective with INDOT letting of August 4, 2010.

Test Piles

- Dynamic-Formula Method, INDOT Standard Specifications Section 701.05(a).
- 1. Test Pile, Indicator, Production. One such pile per support is required.
- 2. Test Pile, Indicator, Restrike. A quantity of one each is required for each test pile.

Test Piles

If the geotechnical report does not specify a number of hours before restrike can occur, the pay items for indicator test pile and indicator test pile restrike are not required.

Test Piles

- Dynamic Pile-Load Test, INDOT Standard Specifications Section 701.05(b).
- 1. Test Pile, Dynamic, Production. The required number and locations of such piles per support or structure will be shown in the geotechnical report.
- 2. Test Pile, Dynamic, Restrike. A quantity of one each is required for each test pile.
- 3. Dynamic Pile Load Test. A quantity of one each is required for each test pile.

Test Piles

- Static-Load Test, INDOT Standard Specifications Section 701.05(c).
- 1. Test Pile, Static Load, pile size, Non-Production. The required number of such piles per support or structure will be shown in the geotechnical report.
- 2. Static Pile Load Test. A quantity of one each is required for the test pile.

Test Piles

- *If this test method is specified, the static-load test-pile location area should be shown on the plans.*
- *The geotechnical report will also specify the dynamic-pile-load test for the same piles.*
- *The pay items for test pile, dynamic restrike; and dynamic pile load test will also be required.*

Test Piles

- *INDOT Standard Drawing E 704-BPIL-04 portion affected by this concept, effective with INDOT letting of Sept. 1, 2010:*

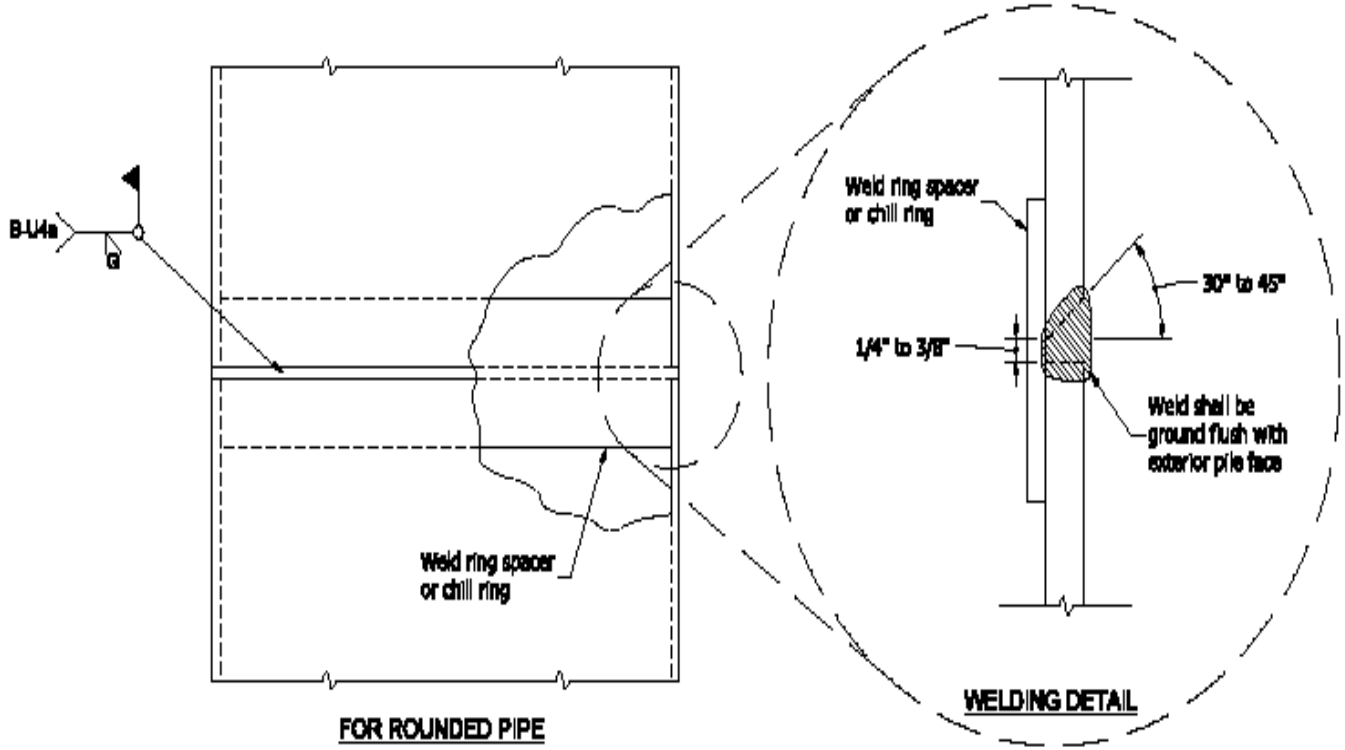

HISTORIC BRIDGE, SELECT OR NON-SELECT

Historic Bridge

- *Design Memo 10-13, dated April 13, revises Design Manual Section 72-7.01, and took effect immediately upon issue.*

Historic Bridge

- ***A historic bridge will be classified as either Select or Non-Select.***

Historic Bridge

INDOT has determined each bridge's classification in accordance with a

- ***Programmatic Agreement Among the Federal Highway Administration,***

  the Indiana State Historic Preservation Officer,

  ***and the Advisory Council on Historic Preservation Regarding the Management and Preservation of Indiana's Historic Bridges*.**

Historic Bridge

A listing of Select and Non-Select bridges is available at **http://www.in.gov/indot/files/List_of_Select_and_Non-Select_Bridges_by_County_mar5.pdf**

SURFACE-SEAL LIMITS

Surface-Seal Limits

- ***The manner of showing the limits of surface seal on the plans, and the pay quantity, should be determined as shown on the next slide.***

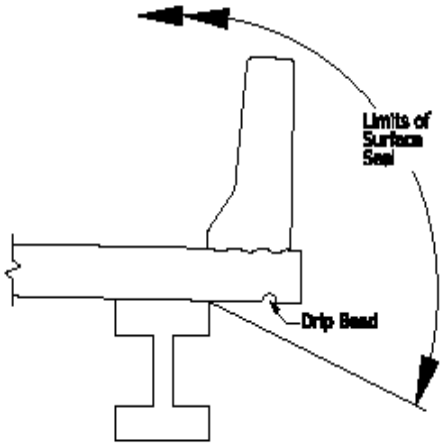

BRIDGE WITH STRUCTURAL MEMBERS

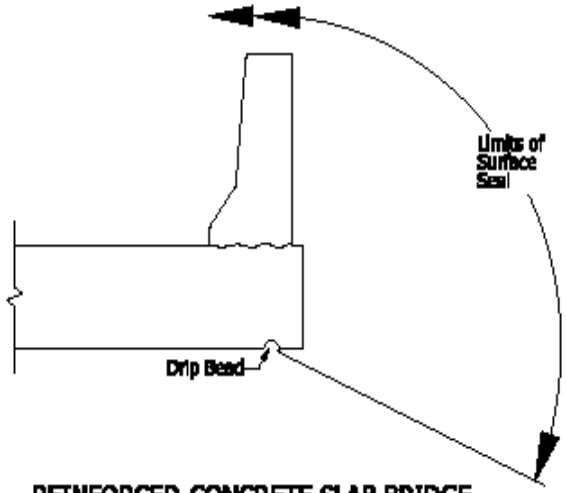

REINFORCED-CONCRETE SLAB BRIDGE

LIMITS OF SURFACE SEAL TO BE SHOWN ON PLANS

Surface-Seal Limits

- ***The quantity in square feet (square meters) should be shown where appropriate on the Bridge Summary of Quantities.***

Surface-Seal Limits

- ***For a bridge with concrete structural members, the tops of all such members, and the outside faces of the fascia members should also be surface sealed.***

Surface-Seal Limits

- ***This quantity is included in the concrete-structural-member quantities. It should not be calculated, nor included in the surface-seal quantity shown on the Bridge Summary of Quantities.***

Surface-Seal Limits

- ***When Effective ?***

  NOW !

DRAINAGE-STRUCTURE SUMPING

Drainage-Structure Sumping

- ***Sumping a drainage structure consists of placing the structure-invert elevation and scour protection at a specified depth below the waterway or stream flowline to satisfy the IDEM Water Quality Section 401 permit requirements.***

Drainage-Structure Sumping

- ***This sumping allows the natural movement of stream-bed material through the structure.***

Drainage-Structure Sumping

- ***Sumping should be provided for each structure over one of the Waters of the United States.***

Drainage-Structure Sumping Depths

English Units

Structure Diameter or Span, S (ft)	Sump Required for Stream Bed of Sand (in.)	Sump Required for Stream Bed of Other Soil (in.)	Sump Required for Stream Bed of Rock or Till (in.)
< 4	6	3	3
$4 \leq S < 12$	12	6	3
$12 \leq S < 20$	18	12	3

3-Sided, Riprap, 10 ft ≤ Span Width < 20 ft

NOTES:

1. See Drawing E 723-R-569d page 1 of 7 for plan view of Section A-A.

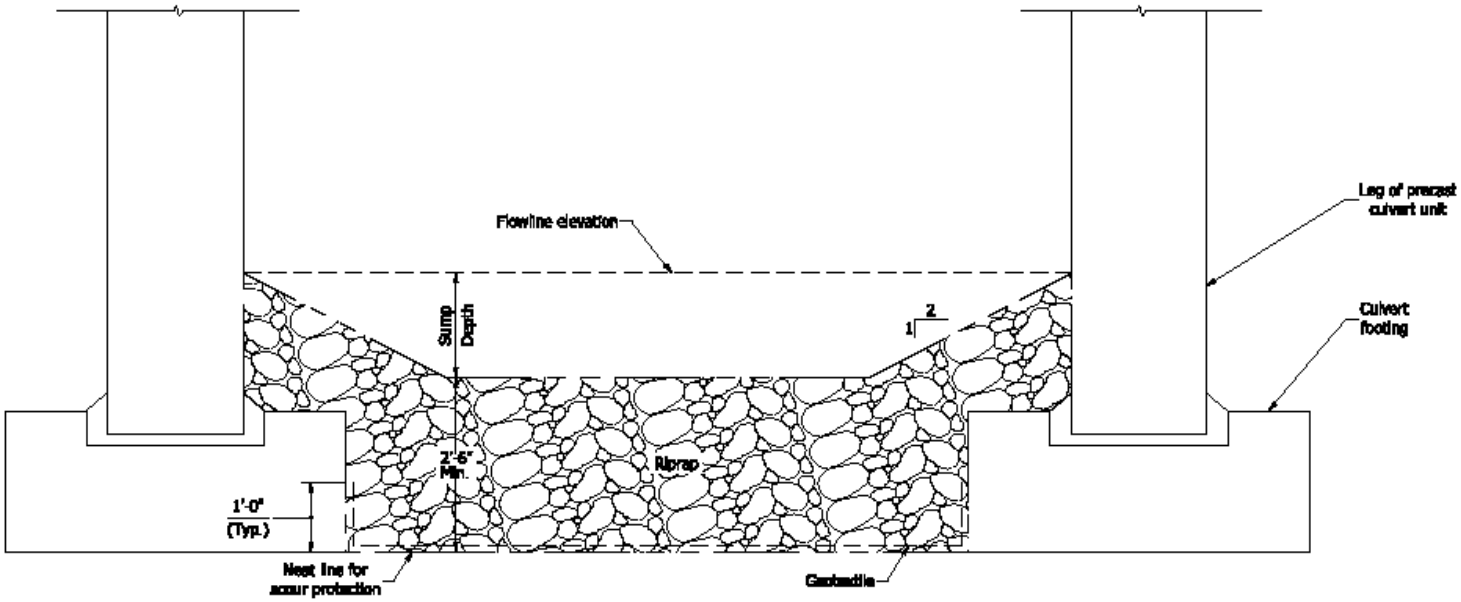

SECTION A-A

RIPRAP METHOD

INDIANA DEPARTMENT OF TRANSPORTATION

THREE-SIDED CONCRETE CULVERT
SCOUR PROTECTION
10'-0" ≤ SPAN WIDTH < 20'-0"

05-01-10

E 723-R-569d 2 of 7

3-Sided, Riprap, Span Width ≥ 20 ft

NOTES:

1. See Drawing E 723-R-569d page 3 of 7 for plan view of Section A-A.

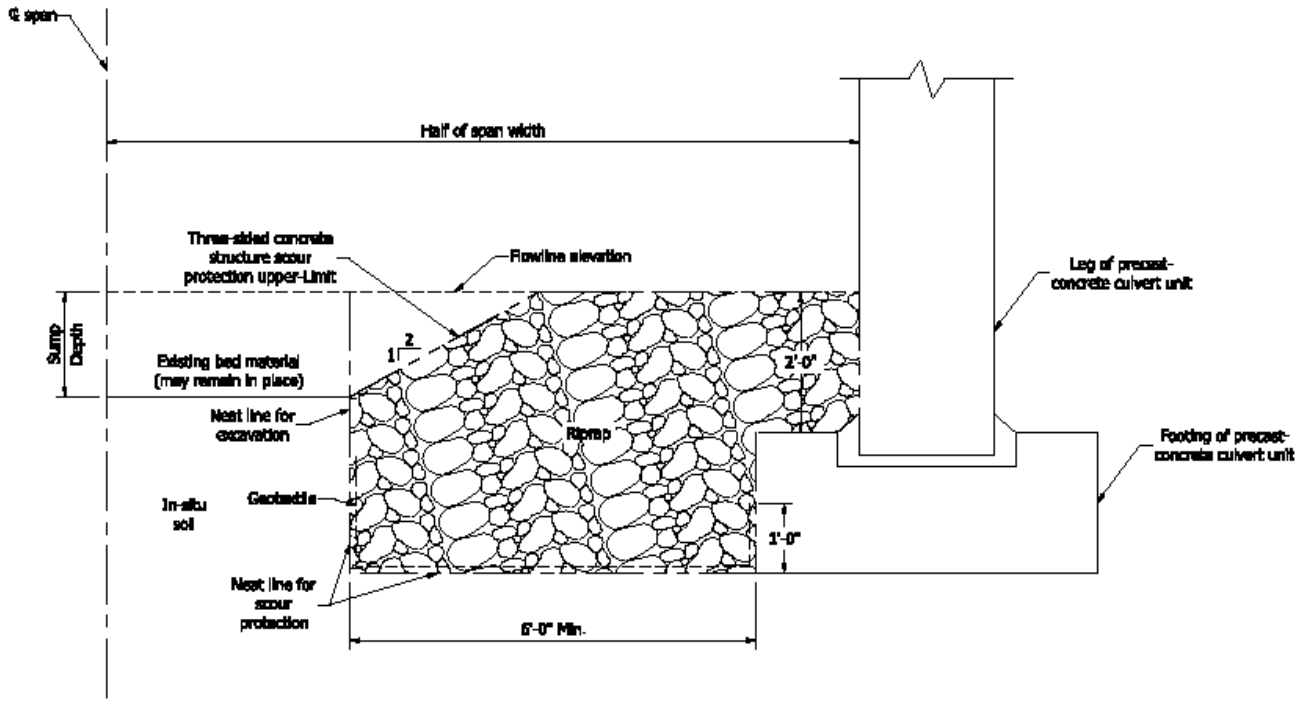

SECTION A-A

RIPRAP METHOD

INDIANA DEPARTMENT OF TRANSPORTATION

THREE-SIDED CONCRETE STRUCTURE
SCOUR PROTECTION
SPAN WIDTH ≥ 20'-0"

05-01-10

E 723-R-569d 4 of 7

3-Sided, Base Slab

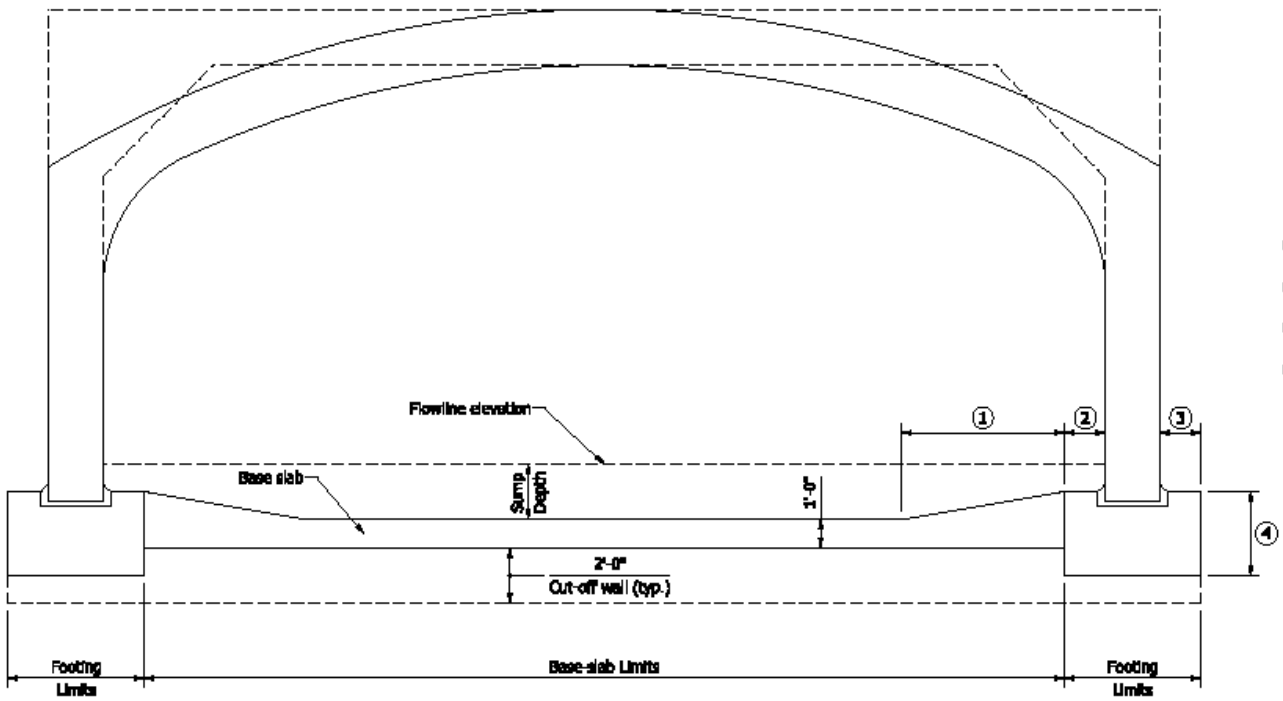

SECTION B-B

BASE SLAB METHOD

NOTES:

1. See the shop drawings for dimension ① through ④.
2. See Drawing E 723-R-569d page 5 of 7 for plan view of Section B-B

LEGEND:

① Taper length

② Inside-footing width

③ Outside-footing width

④ Footing depth

INDIANA DEPARTMENT OF TRANSPORTATION

THREE SIDED CONCRETE CULVERT
SCOUR PROTECTION
BASE-SLAB METHOD

05-01-10

E 723-R-569d 6 of 7

Pipe or Box Structure, Riprap

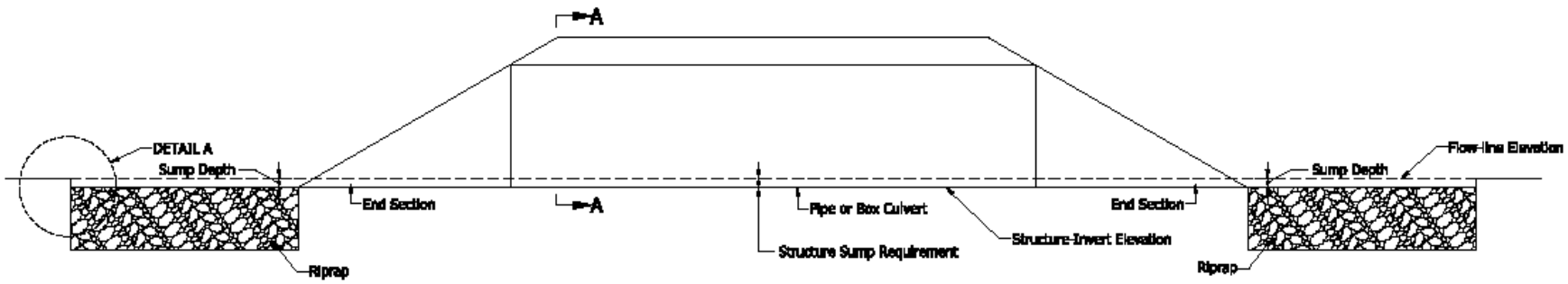

ELEVATION

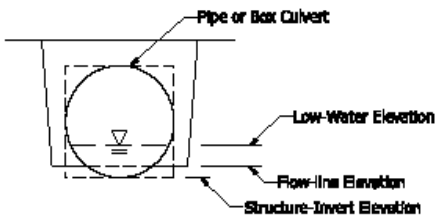

SECTION A-A

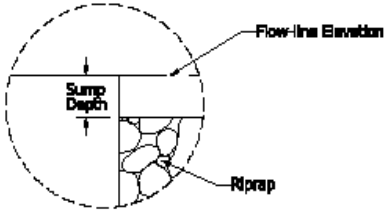

DETAIL A

INDIANA DEPARTMENT OF TRANSPORTATION

PIPE OR BOX CULVERT SUMPING PROTECTION

05-01-10

E 723-R-569d 7 of 7

Drainage-Structure Sumping

- ***A base slab should be used only if it has been determined that the flowline-area soil will not support ripirap.***

Drainage-Structure Sumping

- ***See Design Memorandum 09-27 Policy Change for more information, recurring plan details, and recurring special provision.***
- ***The quantities of riprap and geotextile for scour protection shall be identified and included in the Structure Data Table***

Drainage-Structure Sumping

- ***WHEN EFFECTIVE ?***

  INDOT May 12, 2010, Letting, for Recurring Plan Detail 723-R-569d

  INDOT Sept. 1, 2010, Letting, for Recurring Special Provision 723-R-568

CONSTRUCTION LOADS ON BRIDGE

Construction Loads on Bridge

- ***Construction loadings are typically not accurately known during the design stage.***
- ***As a minimum, the values shown on the next two slides should be used.***

Construction Loads on Bridge

- **Deck Falsework Loads:** Designed for 15 lb/ft^2 for permanent metal stay-in-place deck forms, removable deck forms, and 2-ft exterior walkway.
- **Construction Live Load:** Designed for 20 lb/ft^2 extending 2 ft past the edge of coping and 75 lb/ft vertical force applied at a distance of 6 in. outside the face of coping over a 30-ft length of the deck centered with the finishing machine.

Construction Loads on Bridge

- ***Finishing-Machine Load:*** ***4500 lb distributed over 10 ft along the coping.***
- ***Wind Load:*** ***Designed for 70 mph horizontal wind loading of 50 lb/ft^2 in accordance with AASHTO Guide Design Specifications for Bridge Temporary Works (1995), Figure 2.1.***

Construction Loads on Bridge

However, these values may be increased if information supporting increased construction loads is available during the design stage.

Construction Loads on Bridge

- ***The source of this information should be documented in the design calculations.***
- ***The magnitude and location of the assumed construction loadings used for design should be shown in the contract documents.***

Construction Loads on Bridge

For a beam or girder structure, the construction-loadings information described earlier should be shown on the General Plan.

Construction Loads on Bridge

- *If increased loads are permitted, the appropriate values should be changed accordingly.*
- *The exterior beam or girder should be checked for the specified construction loadings.*

Construction Loads on Bridge

Notice of these changes appears by way of Design Memo 10-18, dated July 9, 2010, effective with Stage 3 Plans Submitted on or after October 1, 2010.

SUPPORT FOR BRIDGE OVER ROAD OR RAILROAD

Bridge Over Road or Railroad

- ***AASHTO LRFD Sec. 3.6.5.2:***
- ***An abutment or pier located within 30 ft of an edge of roadway, or 50 ft from a railroad-track centerline, must be designed for an equivalent static force of 400 kip.***

Bridge Over Road or Railroad

- ***INDOT-Approved Exemption:***

  A mechanically-stabilized-earth-wall bridge abutment placed adjacent to a roadway need not be checked for such force.

Bridge Over Road or Railroad

- ***INDOT-Approved Exemption:***

  However, if the wall must be placed inside the clear zone, roadside safety should be addressed as described in Indiana Design Manual Section 49-2.0.

Bridge Over Road or Railroad

- ***INDOT-Approved Exemption:***

  This is addressed in Design Memorandum 10-04, issued Jan. 5. This took effect upon the memo's issuance.

Bridge Over Road or Railroad

- ***Proposed Exemptions:***

  Spread-footing, piles, drilled-shaft foundations. Extra resistance is provided by passive soil resistance, friction, and piles' structural capacity.

BEAM-HAUNCH FILLET TREATMENT

Existing Figure, Steel Member

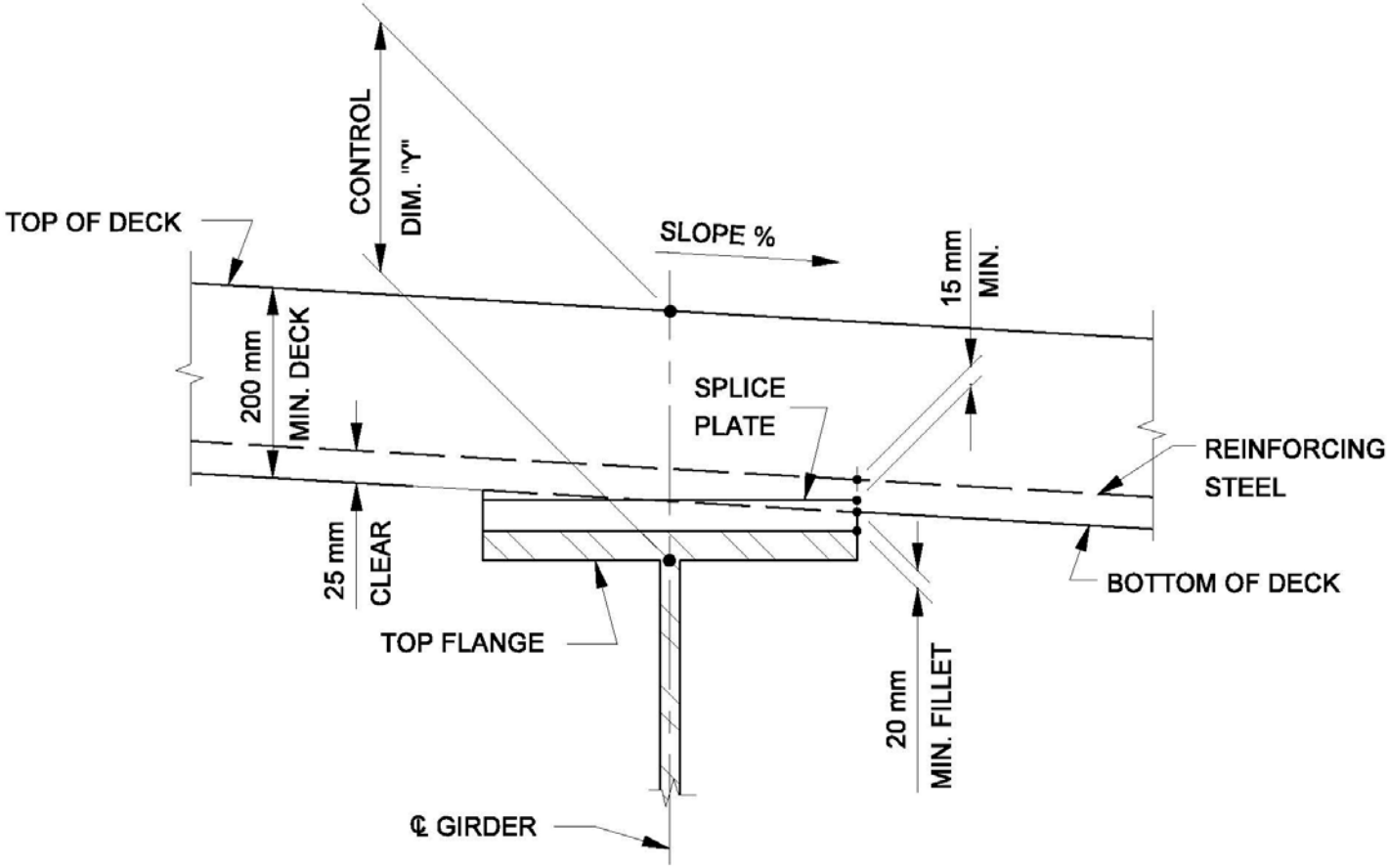

FILLET DIMENSIONS FOR STEEL BEAM

Figure 61-4B

Revised Figure, Steel Member

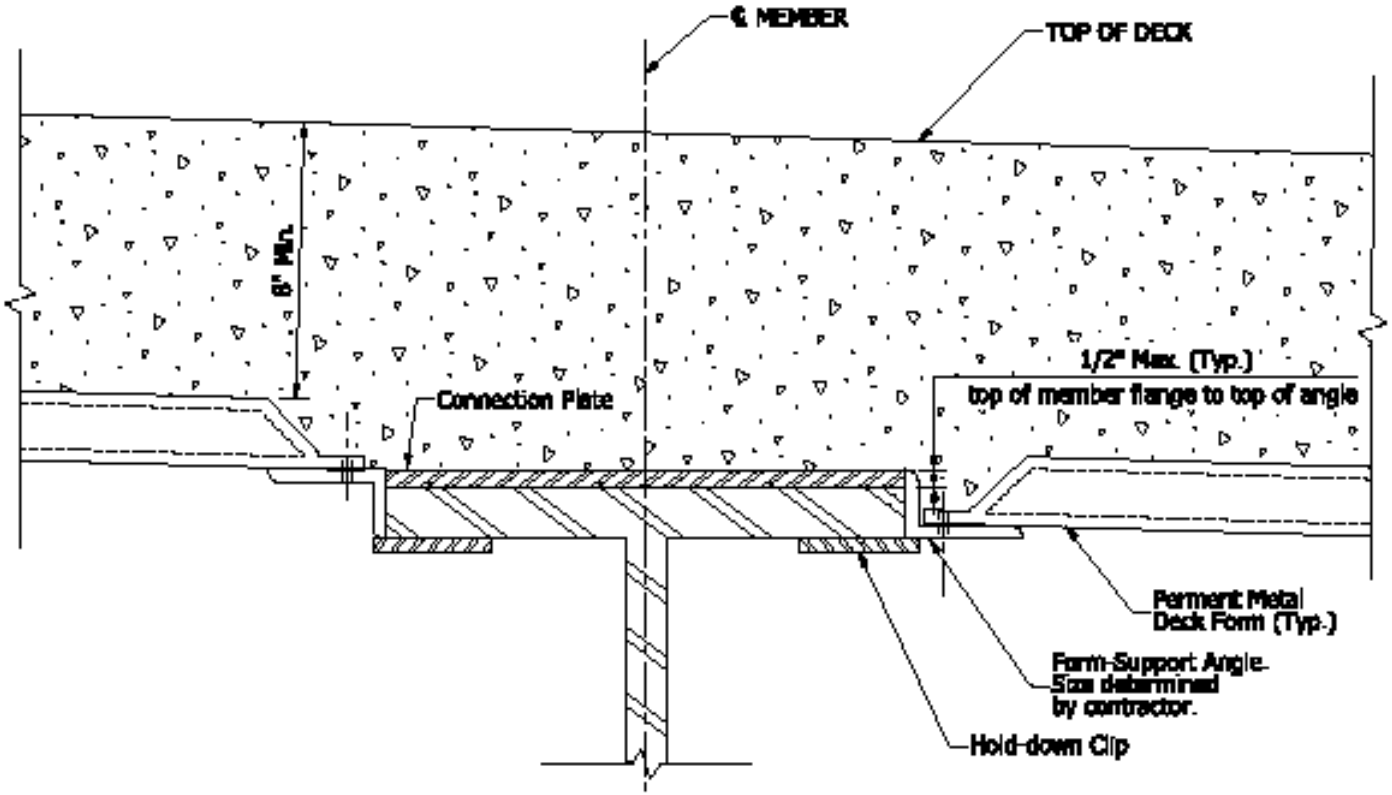

FILLET TREATMENT FOR
STRUCTURAL-STEEL MEMBER

Figure 61-4B

Existing Figure, Concrete Member

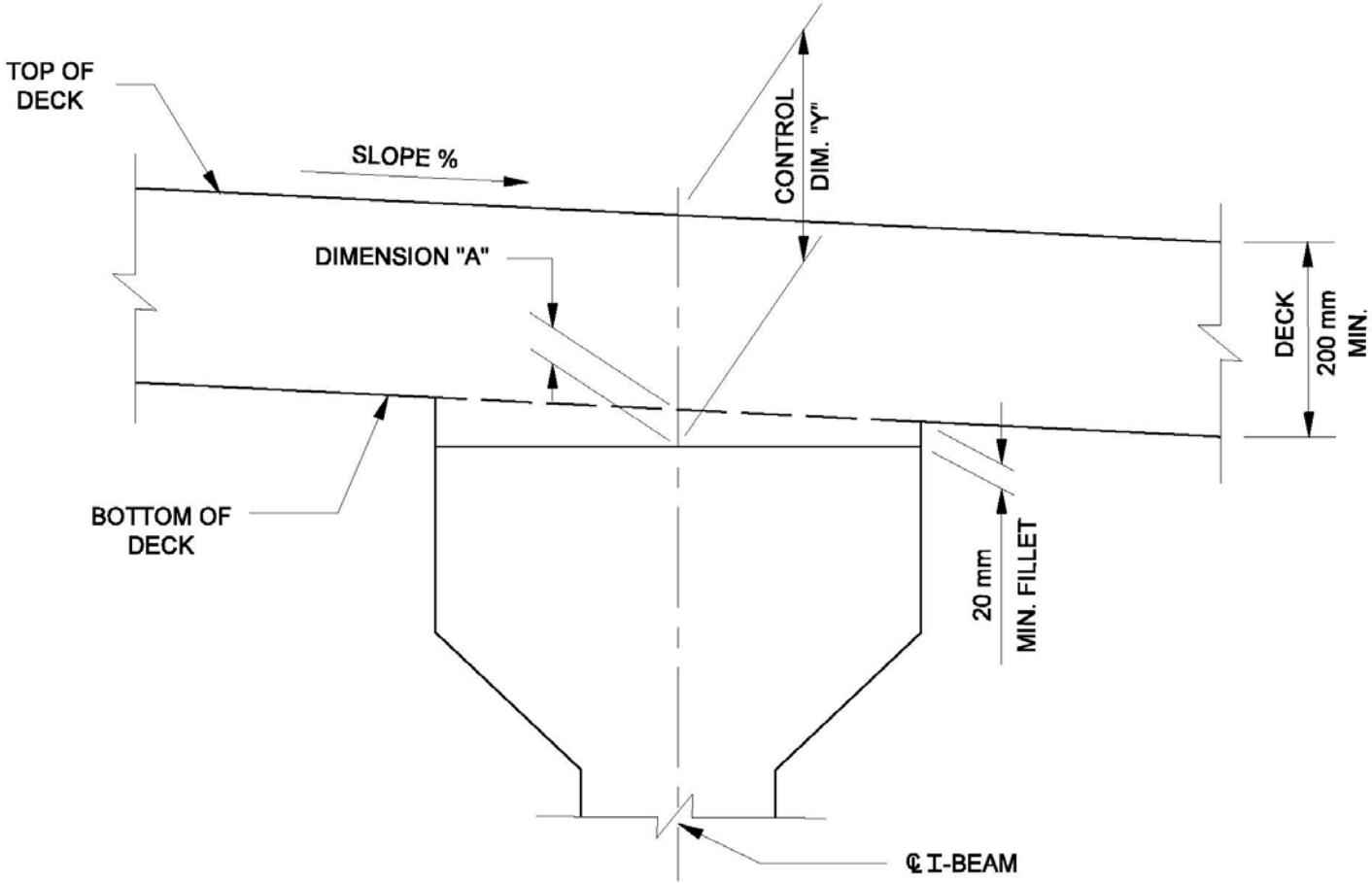

FILLET DIMENSIONS FOR I-BEAM, BOX BEAM OR BULB-TEE BEAM

Figure 61-4C

Revised Figure, Concrete Member

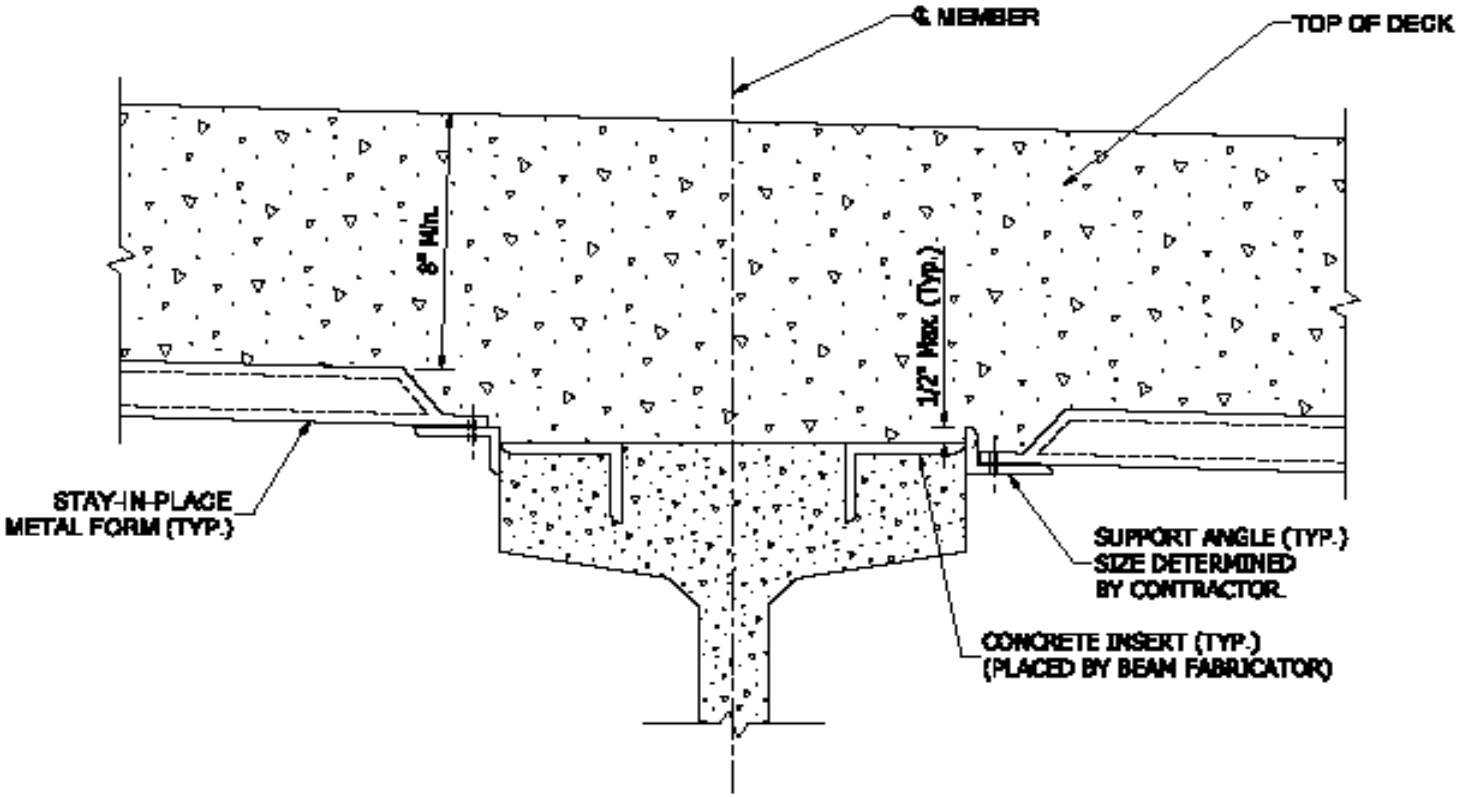

FILLET TREATMENT FOR PRESTRESSED-CONCRETE MEMBER

Figure 61-4C

Figure 61-4C Change

The top of the support angle has been raised to be 1/2 in. above the top of the member, thereby raising its stay-in-place metal form accordingly.

Bridge-Railing Transition
TGS-1 to
Bridge Railing TS-1

TGS-1 to TS-1

Recurring Plan Detail 706-B-140d has been revised as shown.

TGS-1 to TS-1

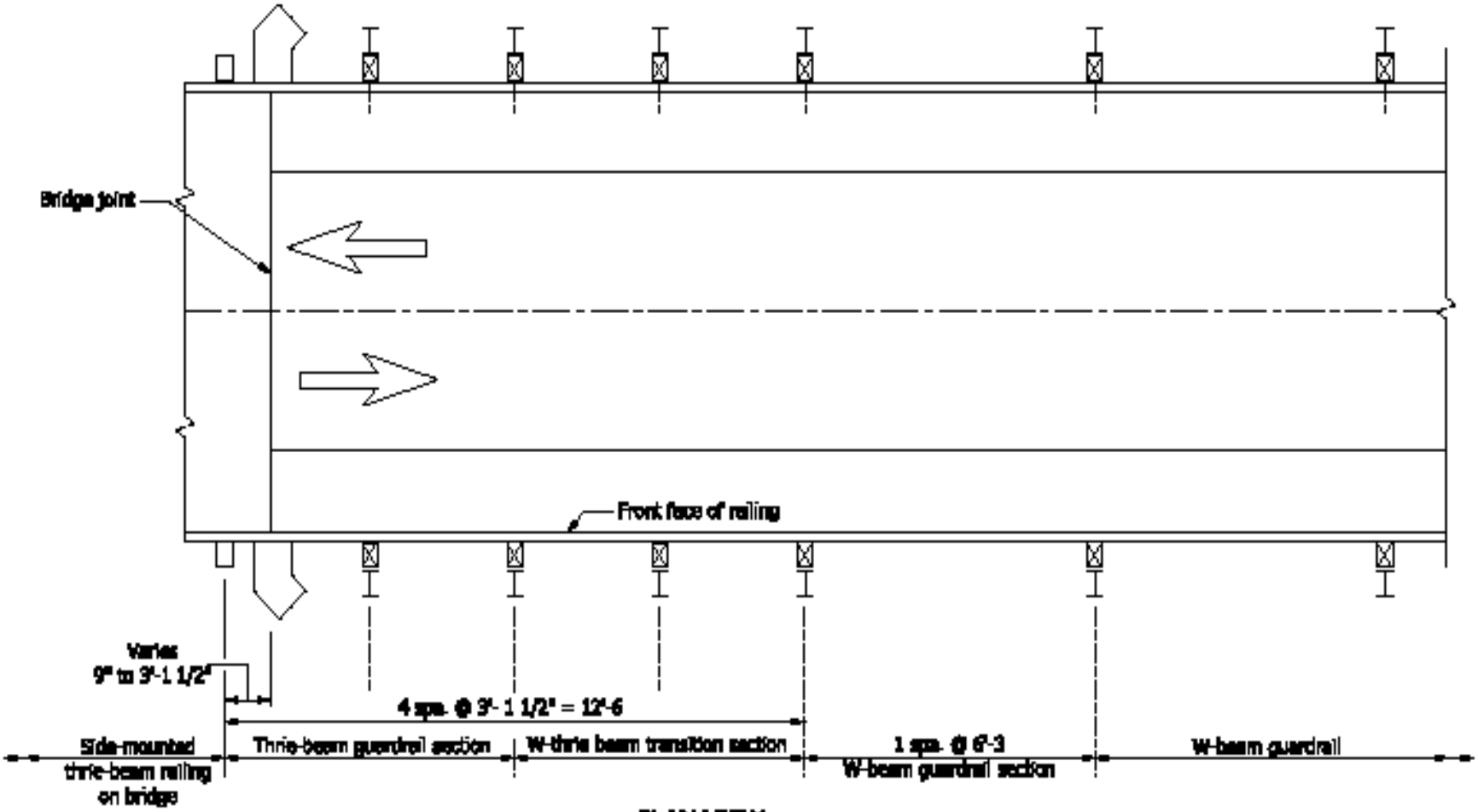

PLAN VIEW

TGS-1 to TS-1

- *This range of 9 in. to 3’-1½” instead of 6 in. max. will permit the anchor bolt nearest the RCBA to be embedded into the bridge slab for up to a 45-deg skew.*
- *It will also keep the post spacing at a maximum of 6'-3".*

TGS-1 to TS-1

This railing / transition system can still be used only for a bridge on an LPA collector or local road, without FHWA participation.

ADJACENT BOX BEAMS TRANSVERSE CONNECTION

Adjacent Box Beams

The details shown on Design Manual Figure 63-8C have been moved to new Standard Drawing 707-BPBB-01.

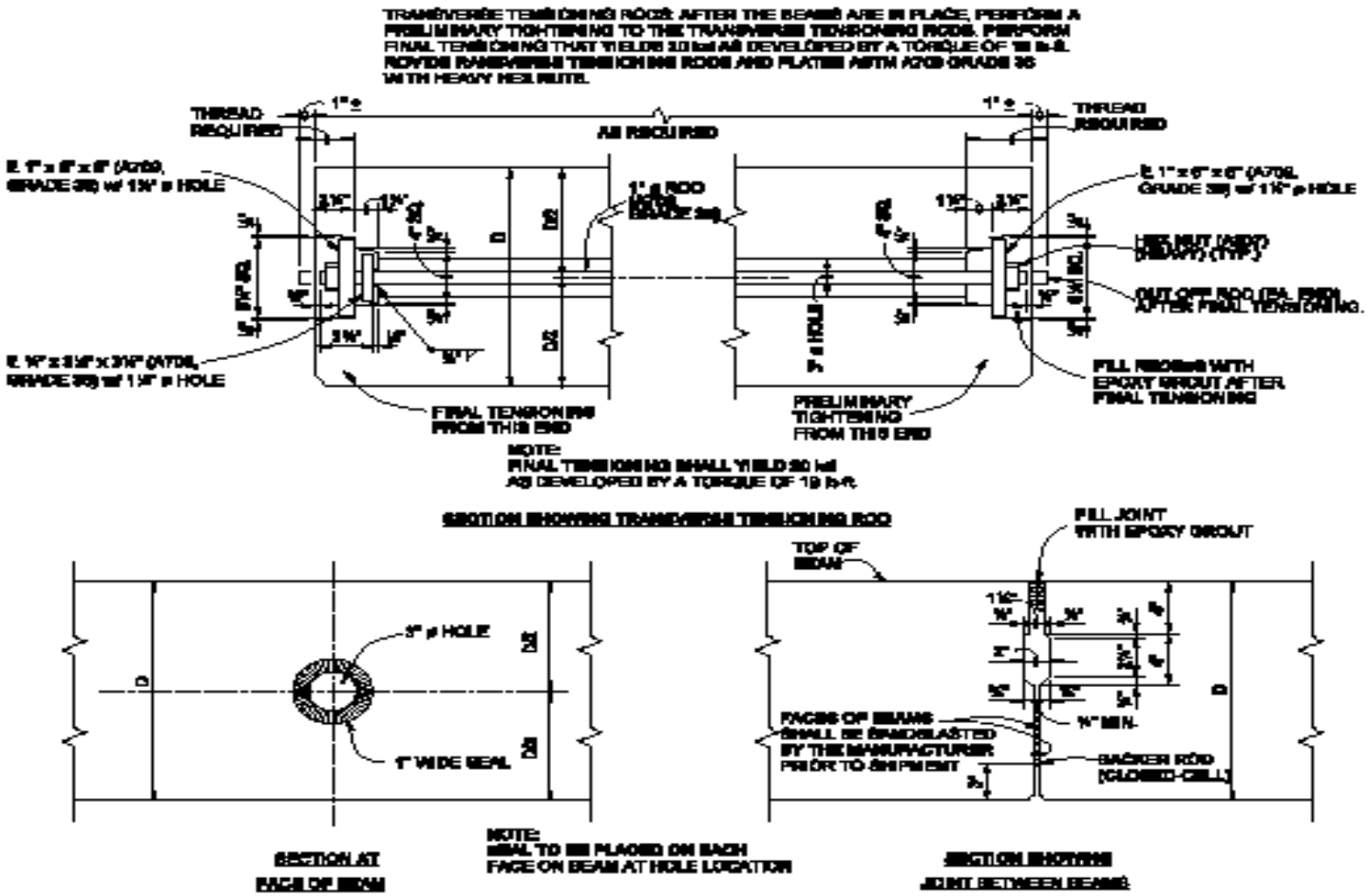

ADJACENT BOX BEAM DETAILS
Figure 63-6C

Adjacent Box Beams, new Std. Dwg.

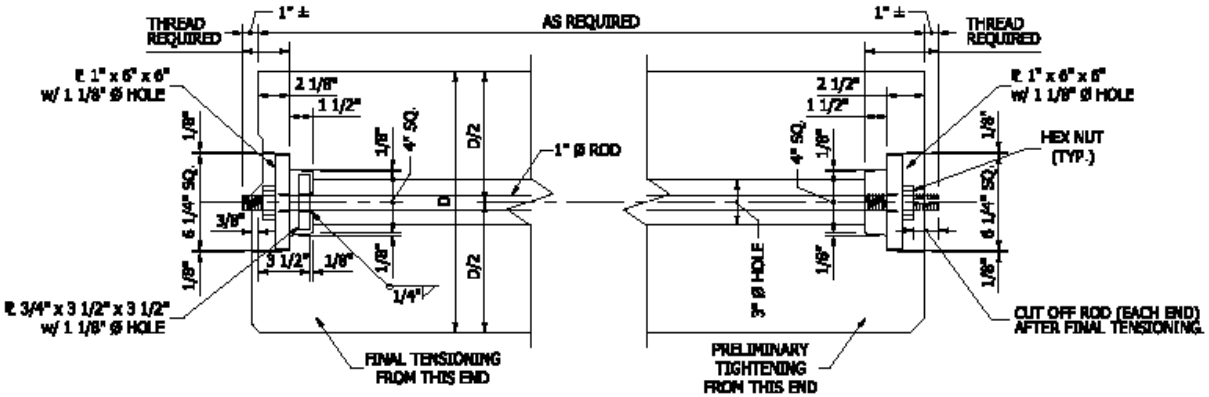

SECTION SHOWING TRANSVERSE TENSIONING ROD

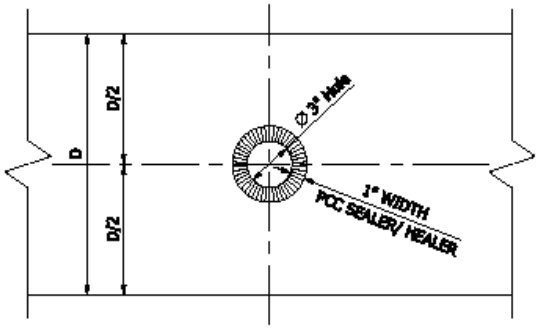

SECTION AT FACE OF BEAM

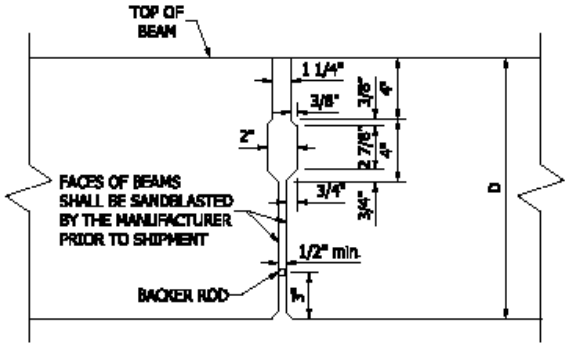

SECTION SHOWING JOINT BETWEEN BEAMS

INDIANA DEPARTMENT OF TRANSPORTATION	
BRIDGE PRESTRESSED BOX BEAM ADJACENT BOX BEAM TRANSVERSE TENSIONING ROD DETAILS SEPTEMBER 2010	
STANDARD DRAWING NO. E 707-BPBB-01	
RICHARD L. VANCLEAVE REGISTERED No. 9750 STATE OF INDIANA PROFESSIONAL ENGINEER DESIGN STANDARDS ENGINEER	DESIGN STANDARDS ENGINEER DATE CHIEF HIGHWAY ENGINEER DATE

Adjacent Box Beams

The specifications shown on Design Manual Figure 63-8C have been moved to Standard Specifications Section 707.02.

Adjacent Box Beams, new Std. Spec.

SECTION 707, AFTER LINE 32, INSERT AS FOLLOWS:

Tensioning rods and steel plates used with adjacent prestressed-concrete box beams shall be in accordance with ASTM A 706, Grade 36 (A 706M, Grade 250). Nuts used with such tensioning rods shall be heavy hex in accordance with ASTM A 563 (A 563M). Grout used with such beams shall be non-shrink in accordance with ASTM C 1107.

SECTION 707, AFTER LINE 364, INSERT AS FOLLOWS:

After adjacent prestressed-concrete box beams are in place, the transverse tensioning rods shall be preliminarily tightened where shown on the plans. The rods shall be final tensioned where shown on the plans. The final tensioning shall yield 20,000 psi (138 MPa) as developed by means of a torque of 19 lb-ft (271 N-m). The tensioning-rod recesses and longitudinal joints between beams shall be filled with grout.

Adjacent Box Beams

Notice of these changes appears by way of Design Memo 10-17, dated May 26, 2010, effective with INDOT letting of Sept. 1, 2010.

CONCEPTS PENDING INDOT APPROVAL

Please do not design or construct the following as described, until instructed to do so by INDOT.

AASHTO GUIDE SPEC. LRFD SEISMIC BRIDGE DESIGN

LRFD Seismic Bridge Design

- ***INDOT is in process with developing a policy regarding design in accordance with this document.***

LRFD Seismic Bridge Design

- ***It will be issued during 2010.***
- ***Until such issuance, seismic-design considerations should still be based on the LRFD Bridge Design Specifications.***

BRIDGE-DECK DRAIN PIPE OR EXTENSION

Bridge-Deck Drain Pipe / Extension

- ***INDOT Standard Drawing 704-BDCG-05 shows that the drain-pipe material shall be cast iron, and that an extension, if required, shall be PVC.***

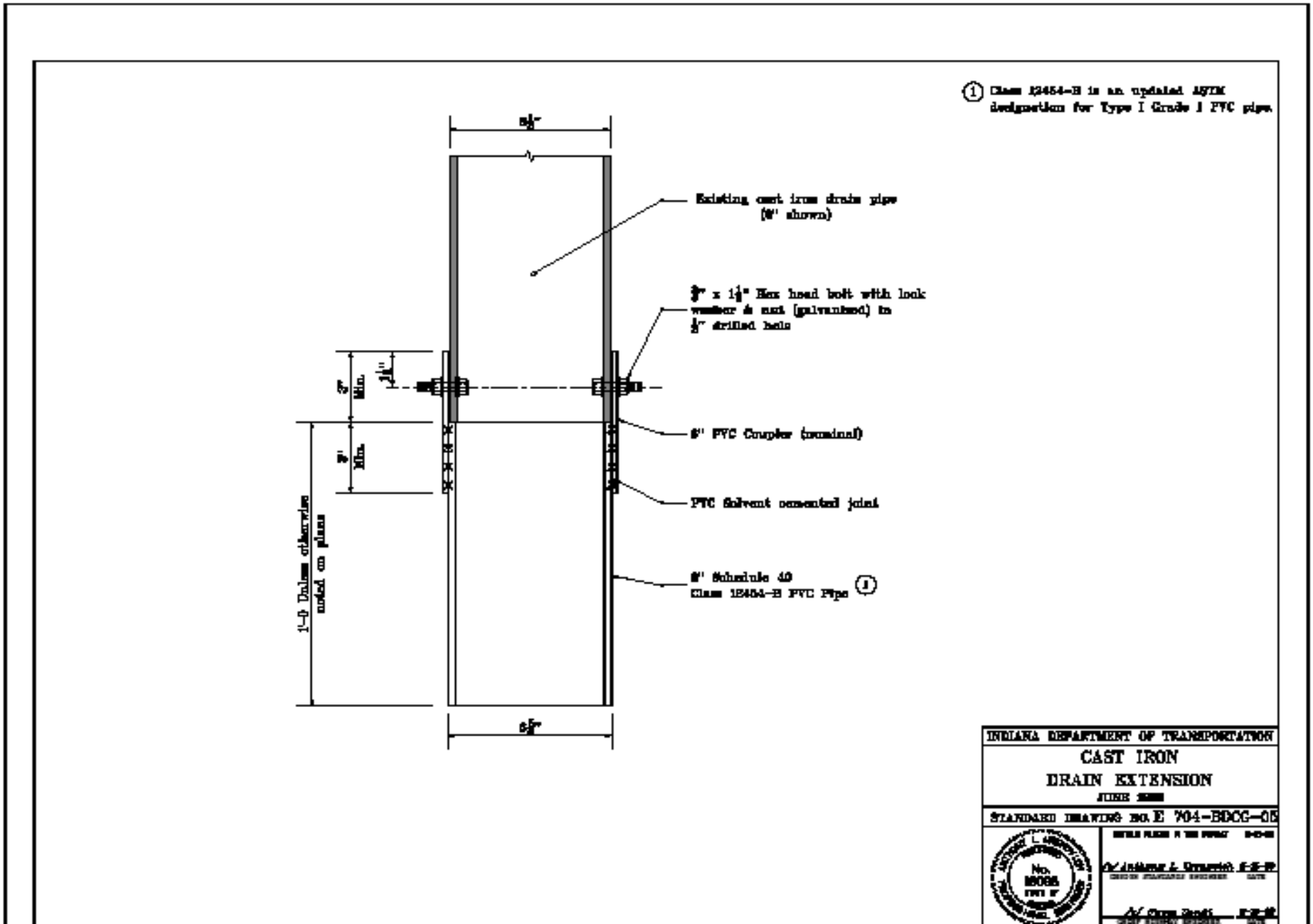

1 Class 12454-B is an updated ASTM designation for Type I Grade 1 PVC pipe.
Existing cast iron drain pipe (8" shown)
3/8" x 1 1/2" Hex head bolt with lock washer & nut (galvanized) in 1/2" drilled hole
8" PVC Coupler (nominal)
PVC Solvent cemented joint
8" Schedule 40 Class 12454-B PVC Pipe 1
1'-0 Unless otherwise noted on plans
INDIANA DEPARTMENT OF TRANSPORTATION
CAST IRON
DRAIN EXTENSION
STANDARD DRAWING NO. E 704-BDCG-05

Bridge-Deck Drain Pipe / Extension

- ***The proposal is to eliminate material requirements from the drawing, and instead place them into the Standard Specifications.***

Bridge-Deck Drain Pipe / Extension

- ***Cast iron, PVC, or fiberglass are proposed to be permitted.***

- ***Effective 9/1/11***
- ***Effective 2012 Specification Book***

DESIGN MANUAL

INDOT Standard-Documents Websites

- **Design Manual:**

  http://www.in.gov/dot/div/contracts/standards/dm.html

Part VI, English Units

The URL is www.in.gov/dot/div/contracts/standards/dm/english/index.html.

DESIGN MANUAL PART VI, STRUCTURAL DESIGN, ENGLISH UNITS, ONLINE VERSION

Part VI, English Units

- ***This now includes Chapter 63, Prestressed Concrete, including figures of all member sections and details.***

Part VI, English Units

- ***Chapter 63 also includes figures for hybrid bulb-tee member sections and details.***

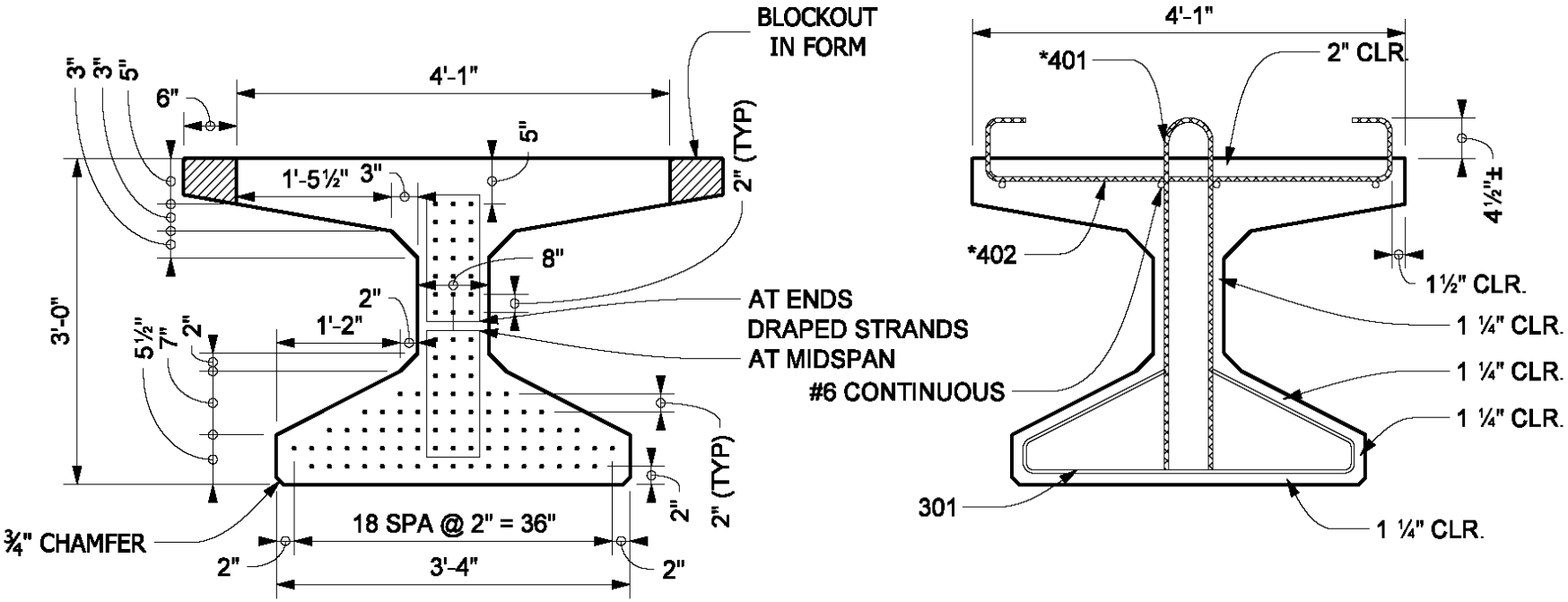

NOTES:

1. ▨ *DENOTES EPOXY-COATED BARS

2. LOCATE HOLDDOWNS 5'-0" EACH SIDE OF CENTER LINE OF BEAM

BULB-TEE BEAM TYPE BT 36 x 49 SECTIONS SHOWING PRESTRESSING AND MILD REINFORCING STEEL

Figure 63-14G(1)

Hybrid Bulb-Tee Sections

These are (height by top-flange width, inches) as follows:

BT 36 x 49	BT 36 x 61
BT 42 x 49	BT 42 x 61
BT 48 x 49	BT 48 x 61
BT 54 x 49	BT 54 x 61
BT 60 x 49	BT 60 x 61
BT 66 x 49	BT 66 x 61

* DENOTES EPOXY-COATED BARS

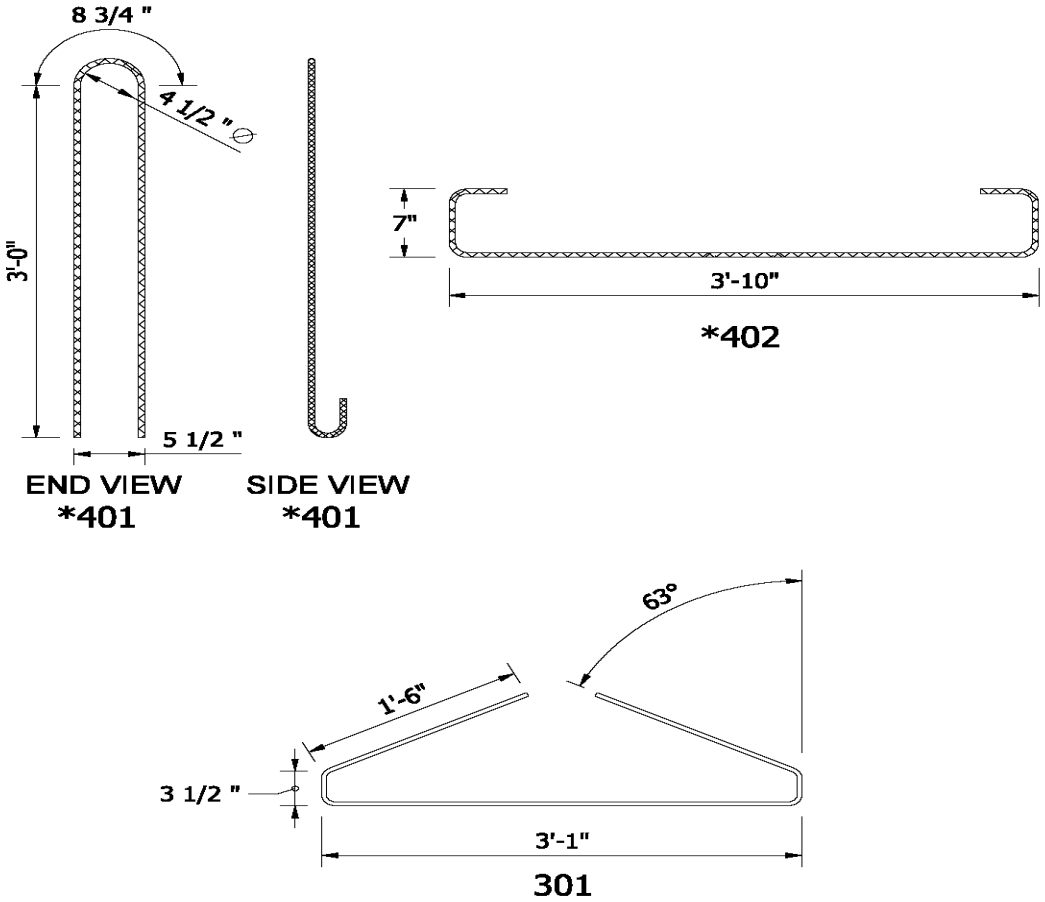

BULB - TEE BEAM
TYPE BT 36 x 49
BAR BENDING DETAILS

Figure 63-14G(2)

Design Manual Rewrite

- Update for current policies
- Update to current AASHTO LRFD
- Not a text book
- Examples in Appendix

PROCEDURE

BRIDGE-LOAD RATING

Bridge-Load Rating

- ***A submission to obtain a bridge-load rating analysis should be made for each INDOT new-bridge, bridge-replacement, or bridge-rehabilitation project.***

Bridge-Load Rating

- ***This requirement will not apply to a box, 3-sided, or local public agency structure.***

FOUNDATION-REVIEW SUMMARY

Foundation-Review Summary

- ***If the actual factored design load per pile is less than the maximum factored design soil resistance, the equations shown in Summarization 66-1A can be used to determine the nominal soil resistance and the nominal driving resistance.***

Foundation-Review Summary

- ***Once the structure is designed, the actual factored design load is determined for a particular foundation.***

Foundation-Review Summary

- ***This value must always be less than or equal to the maximum factored design soil resistance, and also less than the maximum factored design load reported in the geotechnical report for that particular pile.***

Foundation-Review Summary

- ***The nominal design load should be set equal to the calculated nominal soil resistance.***

Foundation-Review Summary

- ***The geotechnical report provides the maximum structural and geotechnical factored loads that the pile can carry or resist, and the geotechnical losses.***

Summ. 66-1A, Load-Factor Design

SUMMARY OF PILE LOADING FOR GEOTECHNICAL TESTING

Support	No. 1	No. 2	No. 3	No. 4
Allowable Design Load (kip)				
Load Factor				
Factored Design Load (kip)				
Scour Zone Friction				
Down Drag Friction				
Ultimate Load, Bearing (kip)				
Testing Method	Standard Specifications Section 701.05( )			

Other:

Approved by: _____ Date:
(signed) Geotechnical Engineer

Reviewed by: _____ Date:
(signed) Reviewer, ☐INDOT ☐ Consultant,

Reviewed by: _____ Date:
(signed) Structural Services Manager

Summ. 66-1A, Load-Factor Design

FOUNDATION REVIEW, LFD

Date:

TO:
Geotechnical Services Office Manager

FROM: , Designer
[INDOT location] [consultant]

Route:
Des. No.:
Structure No.:
Over:
Construction Project No.:

It is recommended that the following foundation(s) be used for the structure identified above.

Support	No. 1	No. 2	No. 3	No. 4
Type				
Size				
Design Load (kip)				
Ultimate Load (kip)				
Min. Pile Tip Elev. for Scour				
Pile Tips	Yes ☐ No ☐	Yes ☐ No ☐	Yes ☐ No ☐	Yes ☐ No ☐
Bottom of Footing Elevation				
Top of Footing Elevation				

The structure is on piles, so the Summary of Pile Loading for Geotechnical Testing is completed, as shown below. Yes ☐ No ☐ n/a ☐

Summarization 66-1A, LRFD

FOUNDATION REVIEW, LRFD

, 20

TO:
Manager, Office of Geotechnical Services

FROM:

Route:
Structure No.:
Des. No.:
Construction Project No.:
Over:

It is recommended that the following foundations be used for the structure identified above.

Support	No. 1	No. 2	No. 3	No. 4
Type				
Size, incl. Shell Thickness				
Factored Design Load, Q_F (kip)				
Nominal Design Load, Q_N (kip)				
Min. Pile Tip Elev. for Scour				
Pile Tips	Yes ☐ No ☐	Yes ☐ No ☐	Yes ☐ No ☐	Yes ☐ No ☐
Bottom of Footing Elevation				
Top of Footing Elevation				

The structure is on piles, so the Summary of Pile Loading for Geotechnical Testing is completed as shown below. Yes ☐ No ☐ n/a ☐

Summarization 66-1A, LRFD

SUMMARY OF PILE LOADING FOR GEOTECHNICAL TESTING

Support	No. 1	No. 2	No. 3	No. 4
Pile Size, Type, and Grade				
Factored Design Load, Q_F (kip)				
Factored Design Soil Resistance, R_R (kip)				
Resistance Factor φ_{dyn}				
Downdrag Load, DD (kip)				
Nominal Soil Resistance, R_n (kip) *				
Downdrag friction, $R_{s\ dd}$ (kip)				
Scour Zone Friction, $R_{s\ scour}$ (kip)				
Relaxation of Tip in Shale, R_{relax} (kip)				
Nominal Driving Resistance, R_{ndr} (kip)				
Testing Method	Standard Specifications Section 701.05( )			

Notes:

* In Calculation of DD, $\gamma_p = 1.4$

$$Q_F \leq Q_{F\ max}$$
$$Q_F \leq R_R$$

To calculate R_n: $R_n = \dfrac{R_R + \gamma_P (DD)}{\phi_{dyn}}$

To calculate R_{ndr}: $R_{ndr} = R_n +$ (Geotechnical Losses) ($R_{s\ scour}$ or $R_{s\ dd}$ or $R_{s\ liq}$)

Other:

Approved by: _____ Date:
(Signed) Geotechnical Engineer

Reviewed by: _____ Date:
(Signed) Reviewer, ☐ INDOT ☐ Consultant,

Reviewed by: _____ Date:
(Signed) Manager, Office of Structural Services

Foundation-Review Summary

- ***An editable version of Summarization 66-1A, or Foundation Review and Summary of Pile Loading for Geotechnical Testing, appears on the Department's website.***

Foundation-Review Summary

- ***A version for LFD and one for LRFD is available.***

Foundation-Review Summary

- ***When Effective ?***

  Bridge design for which foundation-review submission to INDOT Office of Geotechnical Services has not yet been made.

What do I do if I Deviate From The Design Manual?

- ***If policy - please contact the Design Resources Supervisor for approval***
- ***If suggested details – document in file***

Proprietary Materials

- ***It is necessary to submit a public interest finding***
- ***Form 17-1A has been revised***

INDOT STANDARD-DOCUMENTS WEBSITES

INDOT Standard-Documents Websites

- **Editable Forms:**

  http://www.in.gov/dot/div/contracts/design/dmforms/index.html

INDOT Standard-Documents Websites

- ***Recurring Special Provisions and Plan Details:***

  http://www.in.gov/dot/div/contracts/standards/rsp/index.html

INDOT Standard-Documents Websites

- **Standard Specifications:**

  http://www.in.gov/dot/div/contracts/standards/book/index.html

INDOT Standard-Documents Websites

- **Standard Drawings:**

  http://www.in.gov/dot/div/contracts/standards/drawings/index.html

??? QUESTIONS ???

Contact:
Anne Rearick
Director, Bridge Design, Inspection, Hydraulics and Technical Support
(317)232-5152
arearick@indot.in.gov