Column External Prestress Retrofit for Substructure Components Appendix B

Derrell Manceaux, P.E.

Federal Highway Administration RESOURCE CENTER

U.S. Department of Transportation Federal Highway Administration

Purpose

- To conduct a design example for an external prestress retrofit

Procedure

- Provide data
- Perform simplified dynamic analysis
- Conduct confinement requirements
- Perform design check
  - Shear capacity

Procedure

- Provide data
- Perform simplified dynamic analysis
- Conduct confinement requirements
- Perform design check
  - Shear capacity

Structural configuration

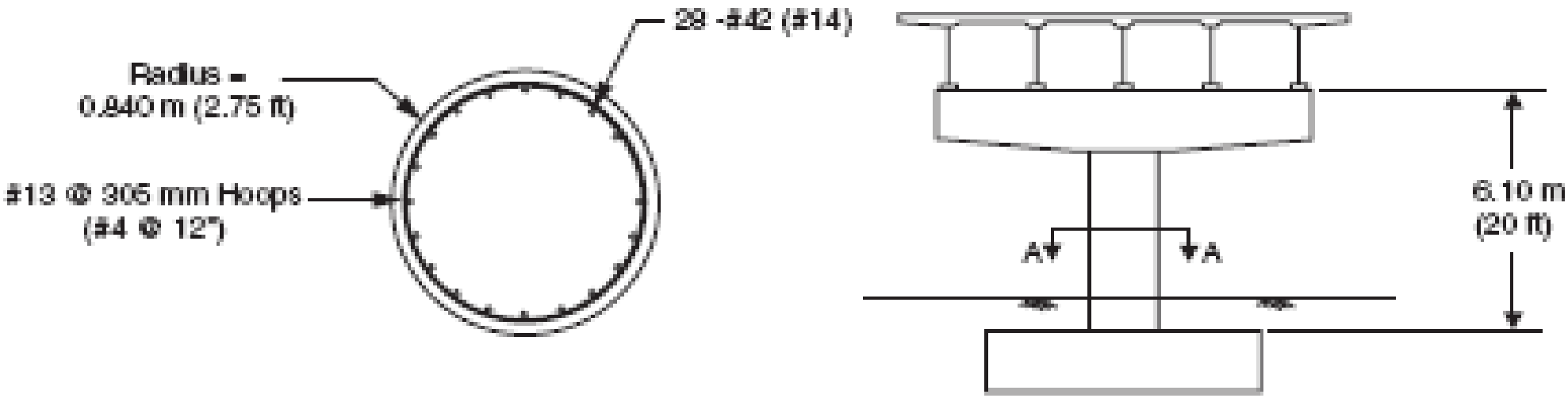

Required data (additional)

- Superstructure weight $W := 2250 \cdot kip$
- Ground acceleration $FvS1 := .5 \cdot g$
- Concrete strength $f' := 5 \cdot ksi$
- Effective inertia $I := 22.5 \cdot ft^4$
- Nominal moment capacity $M_n := 10147 \cdot K\ ft$
- Concrete cover $cover := 2 \cdot in$

Required data (additional)

- Mod Elast Prestress $E_s := 29000 \cdot ksi$
- Mod Elast Conc $E = 580608\ ksf$
- Ultimate steel strength $f_{pu} := 270 \cdot ksi$

Simplified dynamic analysis

- Structural stiffness $k_c := \frac{3 \cdot E \cdot I_{eff}}{L^3}$ $k_c = 4892.35 \frac{k}{ft}$
- Mass $m := \frac{W}{g}$ $m = 69.88\, k \cdot \frac{sec^2}{ft}$
- Structural period $T := 2 \cdot \pi \cdot \sqrt{\frac{m}{k_c}}$ $T = 0.75\, s$

Simplified dynamic analysis (cont'd)

- Spec acc $S_a := \frac{FvS1}{T}$ $S_a = 0.67\ g$
- EQ shear $V_{EQ} := S_a \cdot W$ $V_{EQ} = 1498.19\ k$
- EQ moment $M_{EQ} := V_{EQ} \cdot L$ $M_{EQ} = 29963.88\ k\text{-}ft$
- EQ deflection $\Delta_{EQ} := \frac{V_{EQ}}{k_c}$ $\Delta_{EQ} = 0.31\ ft$

Procedure

- Provide data
- Perform simplified dynamic analysis
- Conduct confinement requirements
- Perform design check
  - Shear capacity

Confinement design

- FBD
  - Solve equation

$$\frac{2\cdot(A_p)}{space}\cdot(f_i + E_s) = f_l\cdot D$$

  - At a strain=.004 and fs=.8fpu (still linear)

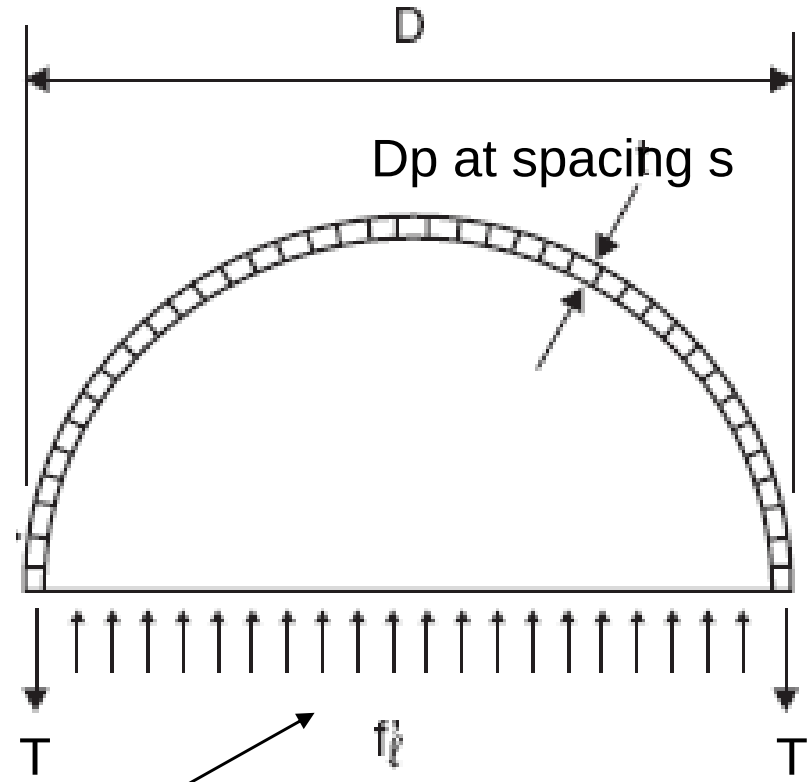

Confinement stress

2T=fl x D

$$\frac{A_p}{s} := \frac{D\cdot 12}{6.4\cdot f_{pu}}$$

fl=confinement stress=250 psi
Fi=tensile stress after loss in wire

Confinement design

- Cable spacing
  - For ½" strand A=.153

$$\frac{A_p}{s} := \frac{D \cdot 12}{6.4 \cdot f_{pu}}$$

$$\frac{A_p}{s} = 0.04 \frac{in^2}{in}$$

S=0.153/.04=4"

Say ½" at 3"

- Ductility factor

$$R_{eff} := \frac{M_{EQ}}{M_n}$$

$$R_{eff} = 2.95$$

<4 OK

Procedure

- Provide data
- Perform simplified dynamic analysis
- Conduct confinement requirements
- Perform design check
  - Shear capacity

Design check

$\phi = 0.85$

- Shear strength enhancement
  - Plastic shear

$$V_p := \frac{1.4 \cdot M_n}{L} \qquad V_p = 710.29\ k$$

  - Conc strength

$$V_c := \phi \cdot A_g \cdot \sqrt{f'_c} \cdot \frac{2 \cdot .8}{1000} \qquad V_c = 329\ kip$$

Since Vc < Vp, find the area of steel required from the retrofit

Design check

- Area steel required

$$V_{sj} := \frac{V_p - V_c}{.85} \qquad V_{sj} = 448.57\ \text{kip}$$

- Solving for area/spacing ratio required

$$\frac{A_{ps}}{s} := 2 \cdot \frac{V_{sj}}{\pi \cdot .8 f_{pu} \cdot D \cdot \cot(45)} \qquad \frac{A_{ps}}{s} = 0.020032$$

- And ratio provided is:

$$\frac{A_p}{s} = 0.04 \frac{\text{in}^2}{\text{in}}$$

OK

Summary

- To conduct a design example for an external prestress retrofit
  - Provide data
  - Perform simplified dynamic analysis
  - Conduct confinement requirements
  - Perform design check
    - Shear capacity