Restrainer design procedure

(iterative method)

APPENDIX A

Federal Highway Administration
RESOURCE CENTER

Restrainer design procedure

- Iterative procedure
  - Calculate elongation capacity of restrainer
  - Compare available seat length with maximum restrainer elongation
  - Compute unrestrained displacement at joint
  - Estimate initial restrainer stiffness

Restrainer design procedure

- Iterative procedure
  - Calculate new joint displacement with restrainer
  - Calculate incremental restrainer stiffness
    - Iterate until expansion joint displ < available seat width
  - Determine required number of restrainers

Structural configuration

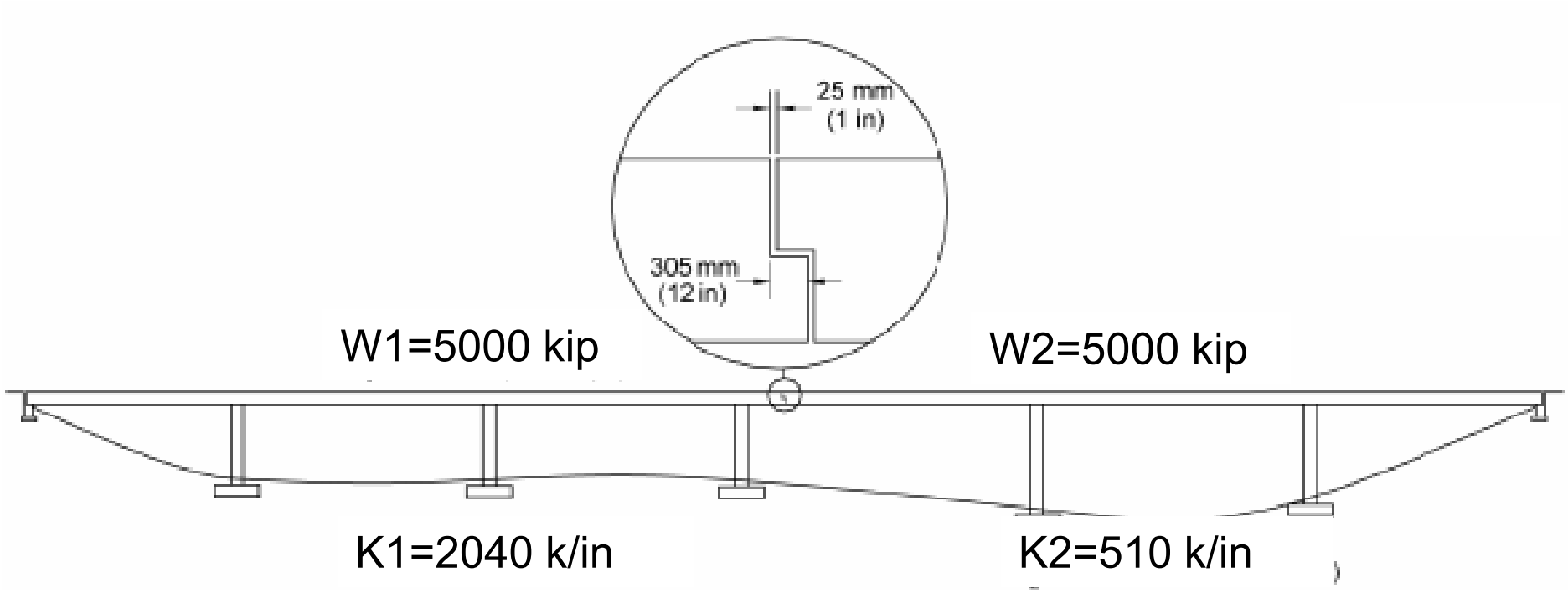

Data

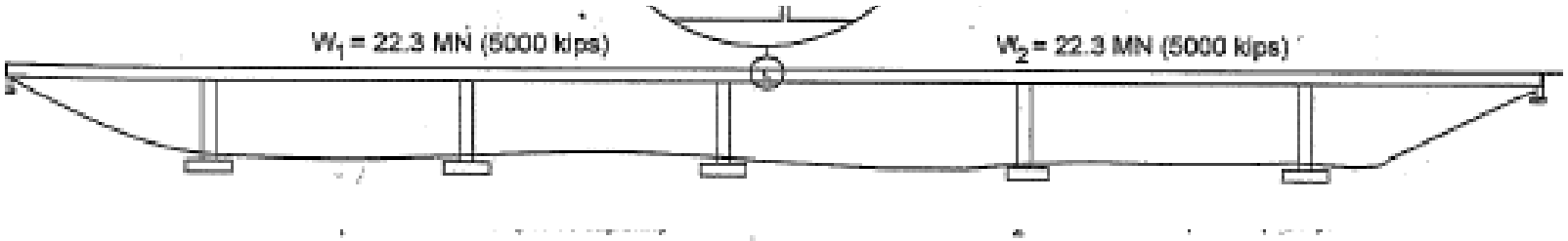

- Seat length (N)= 12”
- Concrete cover (dc)= 2”
- Restrainer yield stress (fy)= 176 ksi
- Restrainer mod of elast (E)= 10000 ksi (pre tension)
- Restrainer length (Lr)= 18 ft
- Restrainer slack (Drs)= 1”
- Displacement ductility (μ)= 4
- Frame stiffness (k1 & k2)= 2040 k/in and 510 k/in
- Frame weight (w1=w2)= 5000 kip

Structural Model

Frame stiffness and mass

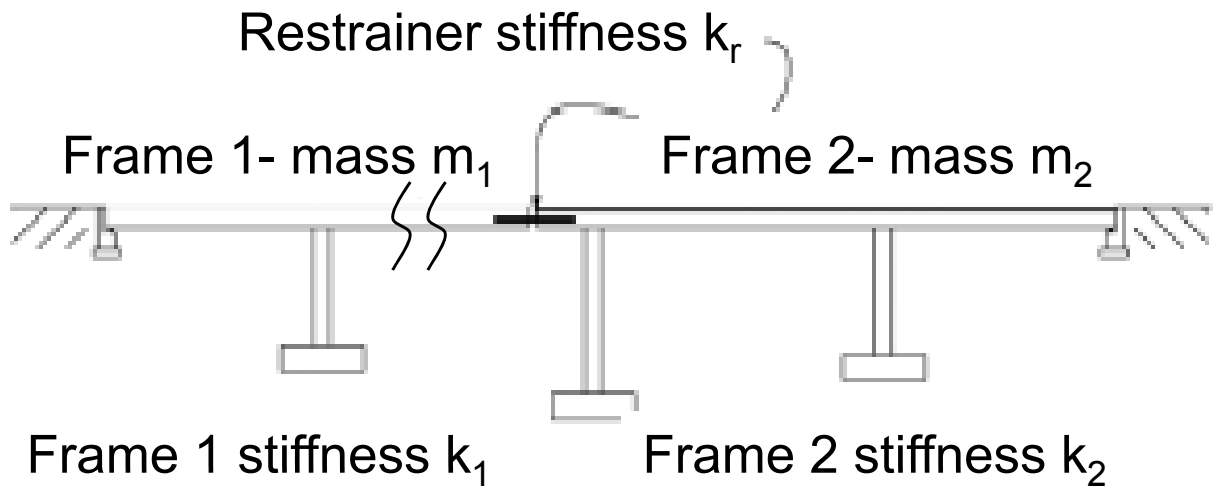

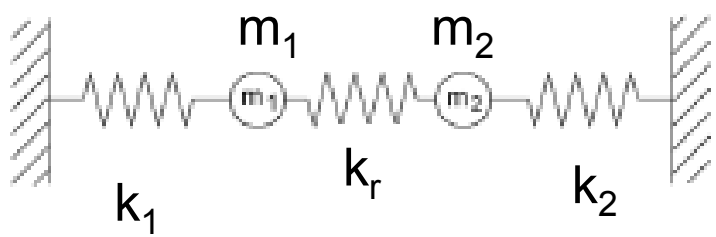

Acceleration coefficients

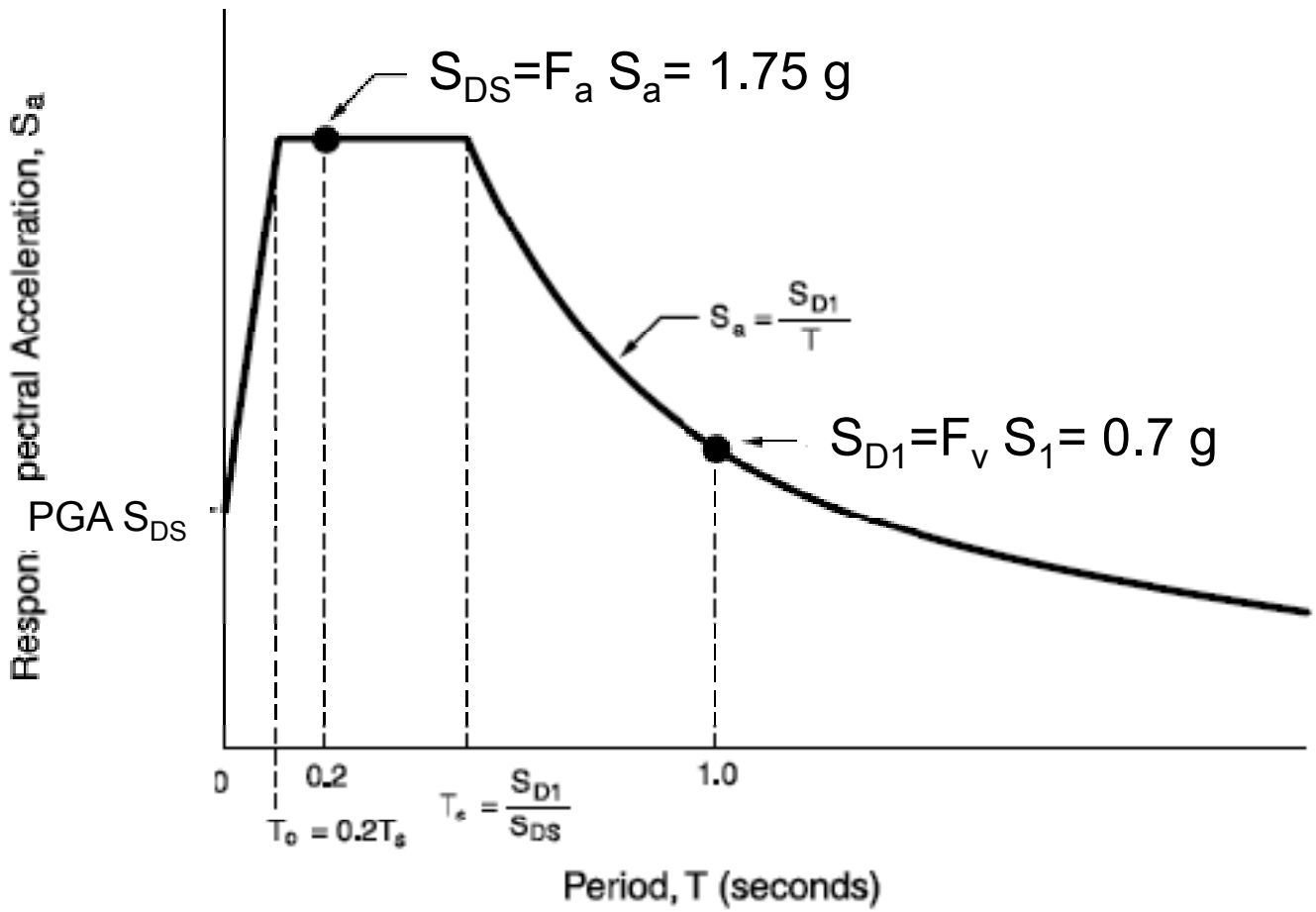

Maximum expansion joint displacement

- Step 1) Restrainer elongation at yield

$$D_y := f_y \cdot \frac{L_r}{E}$$ 176 x(18x12)/10,000= $D_y = 3.7\ \text{in}$

- Displacement capacity of restrainer

$$D_r := D_y + D_{rs}$$ 3.7” +1”= $D_r = 4.7\ \text{in}$

- Available seat length

$$D_{as} := N - gap - 2 \cdot d_c$$ 12-1-(2x2”)= $D_{as} = 7\ \text{in}$

- Check seat length with maximum restrainer elongation

$D_r = 4.7\ \text{in}$ <<?? $\frac{2}{3} \cdot D_{as} = 4.7\ \text{in}$

Federal Highway Administration RESOURCE CENTER

Say OK Configuration is good

Unrestrained relative expansion joint displacement

- Joint displacement without restrainers
- pier 1

$$k_{eff_1} := \frac{k_1}{\mu}$$ 2040/4= $$k_{eff_1} = 510 \frac{kip}{in}$$

- pier 2

$$k_{eff_2} := \frac{k_2}{\mu}$$ 510/4= $$k_{eff.2} = 127.5 \frac{kip}{in}$$

Unrestrained relative expansion joint displacement

- Damping coefficient

$$\xi_{eff} := .05 + \frac{1 - \frac{.95}{\sqrt{\mu}} - .05 \cdot \sqrt{\mu}}{\pi} \qquad \xi_{eff} = 0.19$$

- Correct 5% damping in response spectrum

$$c_d := \frac{1.5}{40 \cdot \xi_{eff} + 1} + .5 \qquad c_d = 0.68$$

Unrestrained relative expansion joint displacement

- Natural period
- span 1

$$\omega_1 := \sqrt{\frac{k_{eff_1}}{W_1 \cdot \frac{1}{g \cdot 12}}} \qquad \omega_1 = 6.28 \frac{rad}{sec}$$

$$Teff_1 := \frac{2 \cdot \pi}{\omega_1}$$

$$Teff_1 = 1\,sec$$

- span 2

$$\omega_2 := \sqrt{\frac{k_{eff_2}}{W_2 \cdot \frac{1}{g \cdot 12}}} \qquad \omega_2 = 3.14 \frac{rad}{sec}$$

$$Teff_2 := \frac{2 \cdot \pi}{\omega_2}$$

$$T_{eff.2} = 2\,sec$$

Federal Highway Administration
RESOURCE CENTER

Unrestrained relative expansion joint displacement

- Force on structure

$$F_1 := M_1 \cdot \frac{FvS1 \cdot g}{T_{eff.1}} \qquad F_1 = 3497.09\,kip$$

$$F_2 := M_2 \cdot \frac{FvS1 \cdot g}{T_{eff.2}} \qquad F_2 = 1748.55\,kip$$

- Joint displacement

$$D_1 := \frac{F_1 \cdot c_d}{k_{eff.1}} \qquad D_1 = 4.65\,in$$

$$D_2 := \frac{F_2 \cdot c_d}{k_{eff.2}} \qquad D_2 = 9.3\,in$$

Unrestrained relative expansion joint displacement

- Relative joint displacement-CQC method

$$\beta := \frac{T_{eff.2}}{T_{eff.1}} \qquad \beta = 2$$

$$\rho_{12} := \frac{8 \cdot \xi_{eff}^{2} \cdot (1+\beta) \cdot \beta^{1.5}}{\left(1-\beta^{2}\right)^{2} + 4 \cdot \xi_{eff}^{2} \cdot \beta \cdot (1+\beta)^{2}} \qquad \rho_{12} = 0.2$$

$$D_{eq0} := \sqrt{D_1^{2} + 2 \cdot \rho_{12} \cdot D_1 \cdot D_2 + D_2^{2}}$$

$D_{eq0} = 11.21\,in$ >> $\frac{2}{3} \cdot D_{as} = 4.7\,in$ NG Restrainers req'd

SRSS=10.4"

Federal Highway Administration RESOURCE CENTER

First estimate of restrainer stiffness

- Structural stiffness-in series

$$\frac{1}{Keff_{mod}} = \frac{1}{k_{eff.1}} + \frac{1}{k_{eff.2}}$$

$$Keff_{mod} = 102 \frac{kip}{in}$$

- Restrainer initial stiffness-first iteration

$$Kr_o := \frac{Keff_{mod} \cdot (D_{eq0} - D_r)}{D_{eq0}}$$

$$Kr_o = 58.33 \frac{kip}{in}$$

Relative joint displacement

- Modal analysis-Structural Stiffness –with restrainers

$$K := \begin{bmatrix} k_{eff.1} + (Kr_o) & -Kr_o \\ -Kr_o & k_{eff.2} + (Kr_o) \end{bmatrix} \qquad K = \begin{pmatrix} 568.33 & -58.33 \\ -58.33 & 185.83 \end{pmatrix} \frac{k}{in}$$

- Mass Matrix

$$M := \begin{pmatrix} M_1 & 0 \\ 0 & M_2 \end{pmatrix} \cdot \frac{1}{12} \qquad M = \begin{pmatrix} 12.94 & 0 \\ 0 & 12.94 \end{pmatrix}$$

Relative joint displacement

- Frequencies

$$K - \omega^2 \cdot M = 0$$

$$\omega_{eff} = \begin{pmatrix} 6.68 \\ 3.7 \end{pmatrix} \frac{c}{s}$$

- Period

$$T_{eff} := \frac{2 \cdot \pi}{\omega_{eff}}$$

$$T_{eff} = \begin{pmatrix} 0.94 \\ 1.7 \end{pmatrix} sec$$

Relative joint displacement

- Normalized mode shapes

$$\phi 1 := \left[K - \left(\omega_{eff_1}\right)^2 \cdot M\right]^{-1} \cdot \begin{pmatrix} 1 \\ 0 \end{pmatrix} \qquad \phi 1 = \begin{pmatrix} 1 \\ -0.15 \end{pmatrix}$$

$$\phi 2 := \left[K - \left(\omega_{eff_2}\right)^2 \cdot M\right]^{-1} \cdot \begin{pmatrix} 0 \\ 1 \end{pmatrix} \qquad \phi 2 = \begin{pmatrix} 0.15 \\ 1 \end{pmatrix}$$

- Participation factors

$$P1 := \frac{\phi 1^T \cdot M \cdot \begin{pmatrix} 1 \\ 1 \end{pmatrix}}{\phi 1^T \cdot K \cdot \phi 1} \cdot \begin{pmatrix} -1 & 1 \end{pmatrix}^T \cdot \phi 1 \qquad P1 = -0.02\,\sec^2$$

$$P2 := \frac{\phi 2^T \cdot M \cdot \begin{pmatrix} 1 \\ 1 \end{pmatrix}}{\phi 2^T \cdot K \cdot \phi 2} \cdot \begin{pmatrix} -1 & 1 \end{pmatrix}^T \cdot \phi 2 \qquad P2 = 0.07\,\sec^2$$

Relative joint displacement

- Response spectrum accelerations (5% damping)

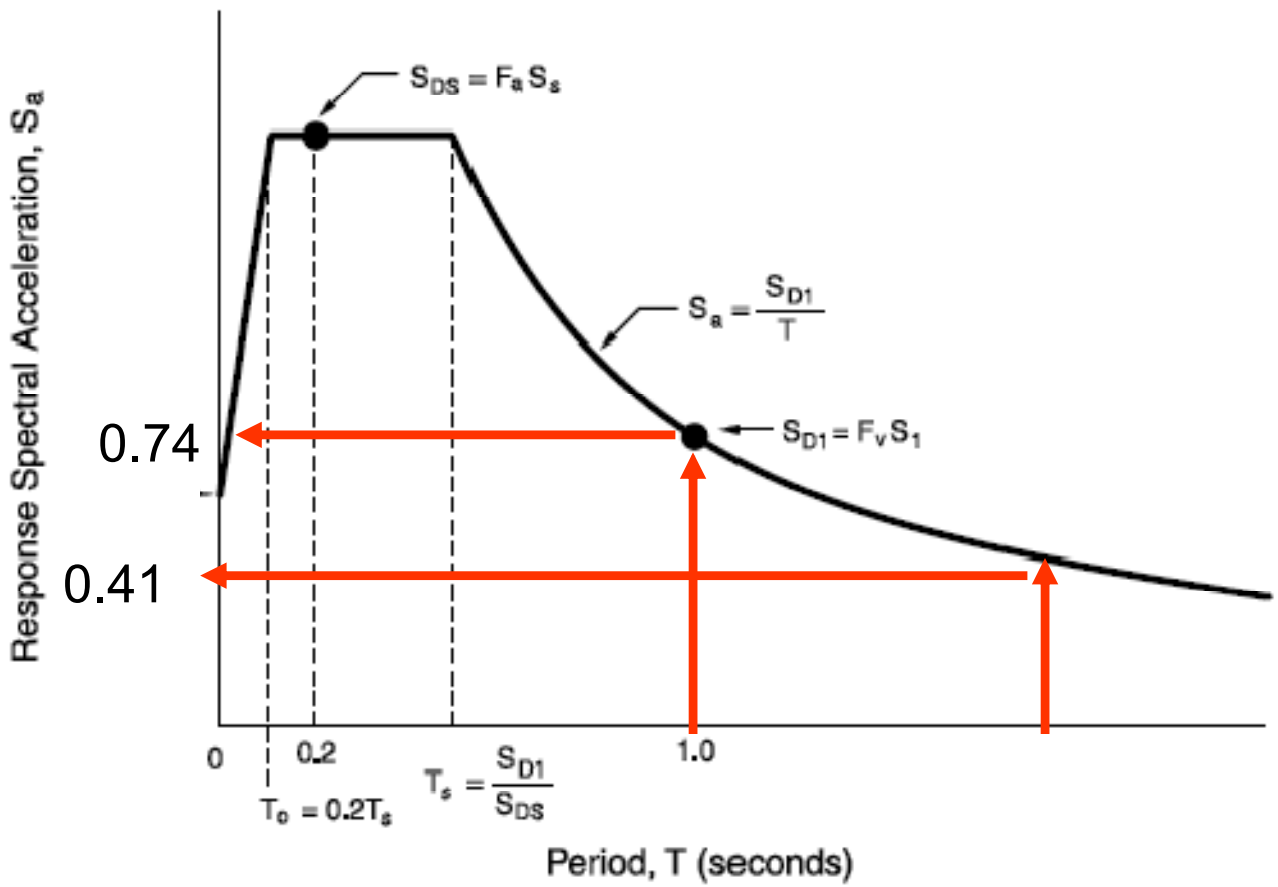

Federal Highway Administration
RESOURCE CENTER

Relative joint displacement

- New joint displacement (with restrainers)

$$D := \left(P \cdot S_a \cdot c_d \cdot g \cdot 12\right) \qquad D = \begin{pmatrix} -4.18 \\ 7.55 \end{pmatrix} \text{in}$$

- Relative joint displacement

$$\beta := \frac{T_{eff_2}}{T_{eff_1}} \qquad \beta = 1.8$$

$$\rho_{12} := \frac{8 \cdot \xi_{eff}^{2} \cdot (1 + \beta) \cdot \beta^{1.5}}{\left(1 - \beta^{2}\right)^{2} + 4 \cdot \xi_{eff}^{2} \cdot \beta \cdot (1 + \beta)^{2}} \qquad \rho_{12} = 0.27$$

$$D_{eq} := \sqrt{(D_1)^2 + 2 \cdot \rho_{12} \cdot D_1 \cdot D_2 + (D_2)^2} \qquad D_{eq} = 7.6 \text{ in}$$

Federal Highway Administration
RESOURCE CENTER

Since Deq > $D_r = 4.7$ in then iterate with new restrainer stiffness

Second restrainer stiffness

$$Kr_1 := Kr_o + \left(Keff_{mod} + Kr_o\right)\cdot\left(\frac{D_{eq} - D_r}{D_{eq}}\right)$$

$$Kr_1 = 117.35\ \frac{k}{in}$$

- Iterate

$$K := \begin{bmatrix} k_{eff.1} + \left(Kr_1\right) & -Kr_1 \\ -Kr_1 & k_{eff.2} + \left(Kr_1\right) \end{bmatrix}$$

$$K = \begin{pmatrix} 627.35 & -117.35 \\ -117.35 & 244.85 \end{pmatrix} \frac{k}{in}$$

$$K - \omega^2 \cdot M = 0$$

$$\omega_{eff} = \begin{pmatrix} 7.14 \\ 4.04 \end{pmatrix}$$

$$T_{eff} := \frac{2\cdot\pi}{\omega_{eff}}$$

$$T_{eff} = \begin{pmatrix} 0.88 \\ 1.55 \end{pmatrix} sec$$

Iteration summary

Iteration	Period (Sec)	Joint Disp (inch)	Kr (k/in)
1	T1=1 T2=2	10.4	58.3
2	T1=0.9 T2=1.7	7.6	117.4
3	T1=0.88 T2=1.55	6.43	172.9
4	T1=0.83 T2=1.48	4.22	172.9

Required restraints

- Area of restrainer $A_r := .222$

- Number required

$$N_r := \frac{Kr_ \cdot D_r}{f_y \cdot A_r}$$

$$\boxed{N_r = 21.26}$$

Restrainer design summary

- Iterative procedure
  - Calculate elongation capacity of restrainer
  - Compare available seat length with maximum restrainer elongation
  - Compute unrestrained displacement at joint
  - Estimate initial restrainer stiffness

Restrainer design summary

- Iterative procedure
  - Calculate new joint displacement with restrainer
  - Calculate incremental restrainer stiffness
    - Iterate until expansion joint displ < available seat width
  - Determine required number of restrainers