Retrofit Measures for Superstructures, Bearings and Seats

Federal Highway Administration
RESOURCE CENTER

U.S. Department of Transportation
Federal Highway Administration

Purpose

- To describe typical retrofit measures for:
  - Bridge decks and girders
  - Bearings, anchorages and pedestals
  - At expansion joints
    - Increase displacement capacity
    - Reduce displacement demand

Retrofit of bridge decks and girders

- Lateral load path enhancement
  - Deck to girder connection
  - Diaphragm strengthening/stiffening
  - Girder strengthening
- Provide longitudinal continuity
  - Web and flange plates
  - Superstructure joint strengthening
- Reduction of dead load
- Strengthening of continuous superstructures

Girder bracing retrofit

- High transverse bending at bearings
- Most critical when:
  - Beam type diaphragm
  - No diaphragm

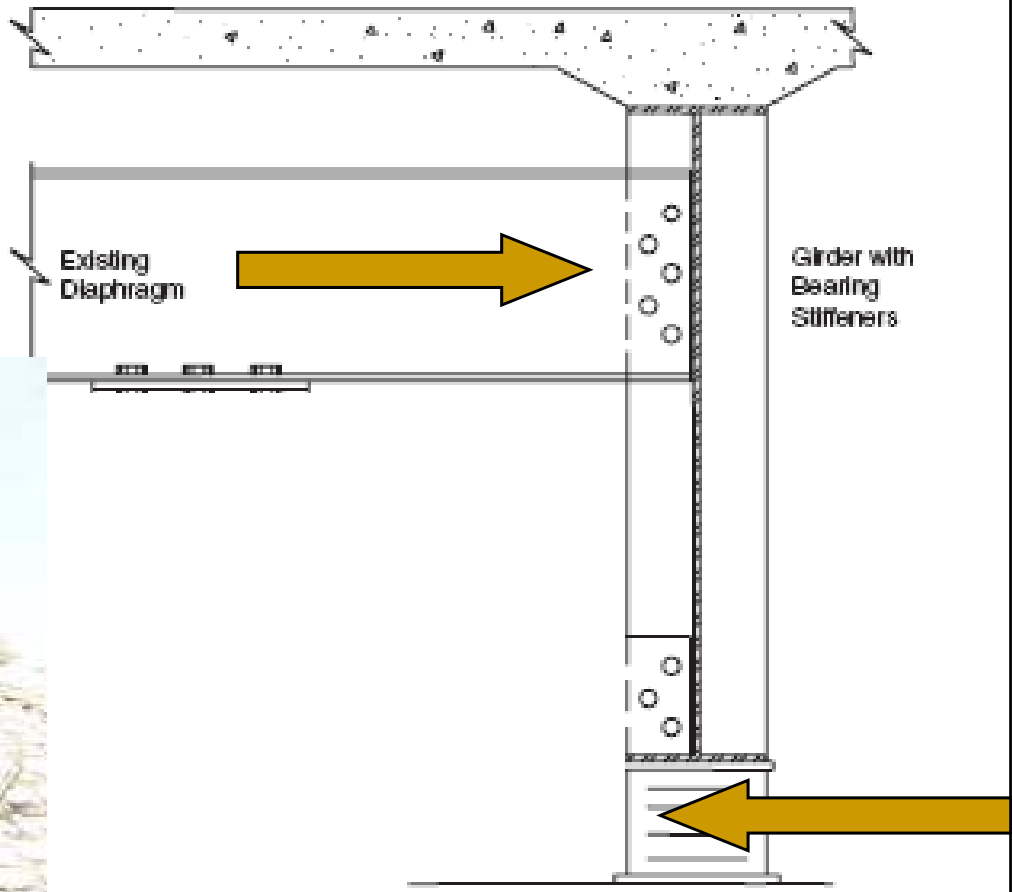

Bearing stiffener retrofit

- High transverse bending at bearings
- Bearing stiffeners may be overstressed

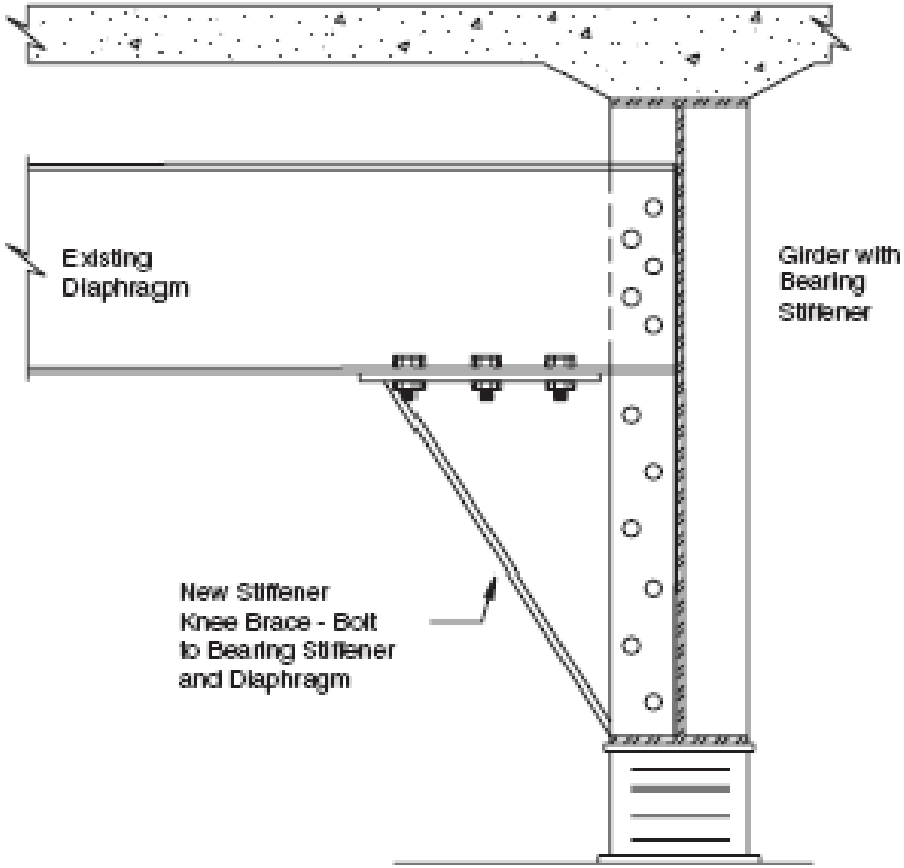

Provide superstructure continuity

- Remove portion of deck
- Connect flanges
- Reconstruct continuous deck
- Verify girder can carry M_{neg}

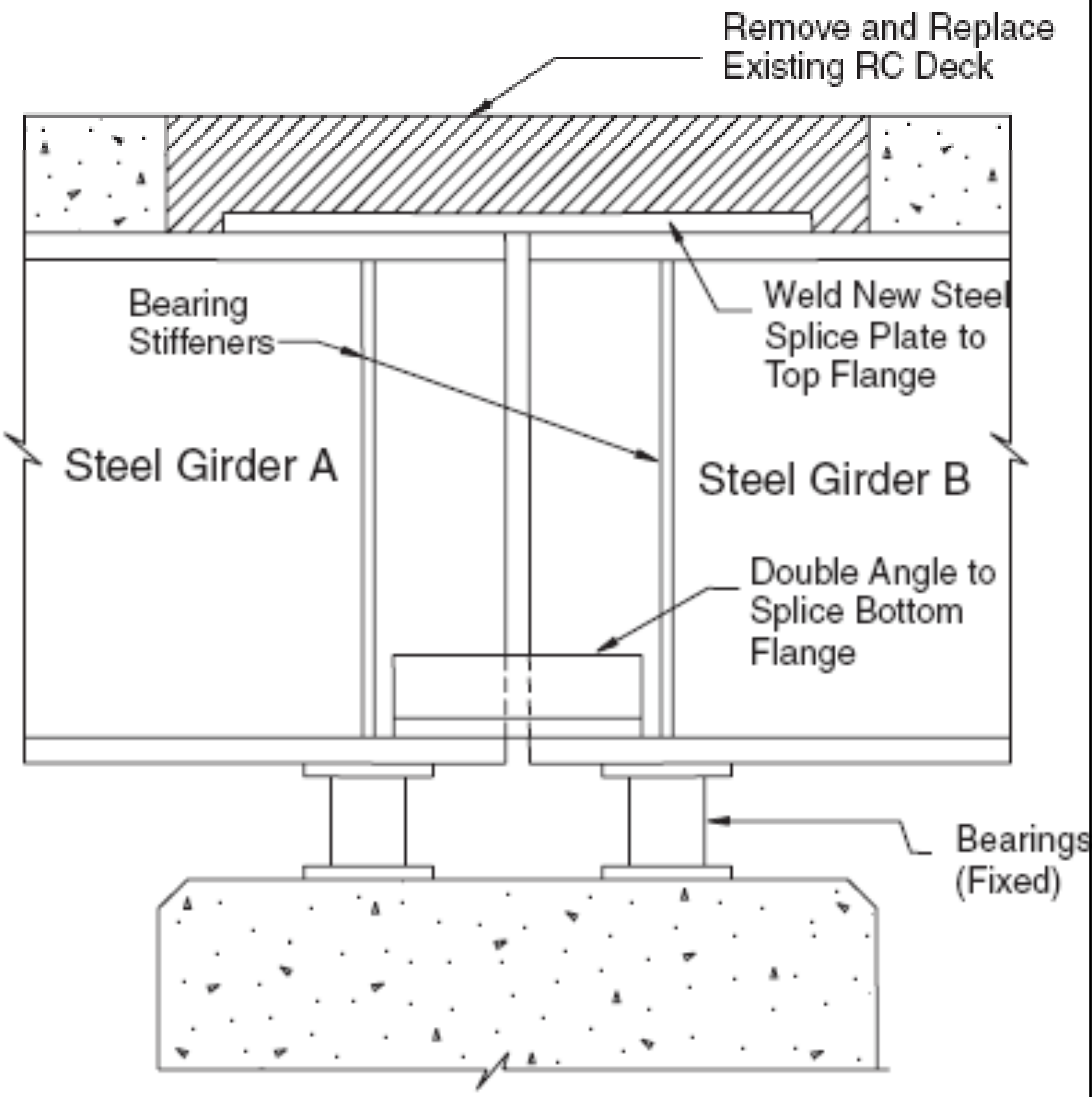

Web splice retrofit

- Provide transverse restraint to prevent web tear
- Provides vertical support for unseated girder
- Slotted holes for expansion

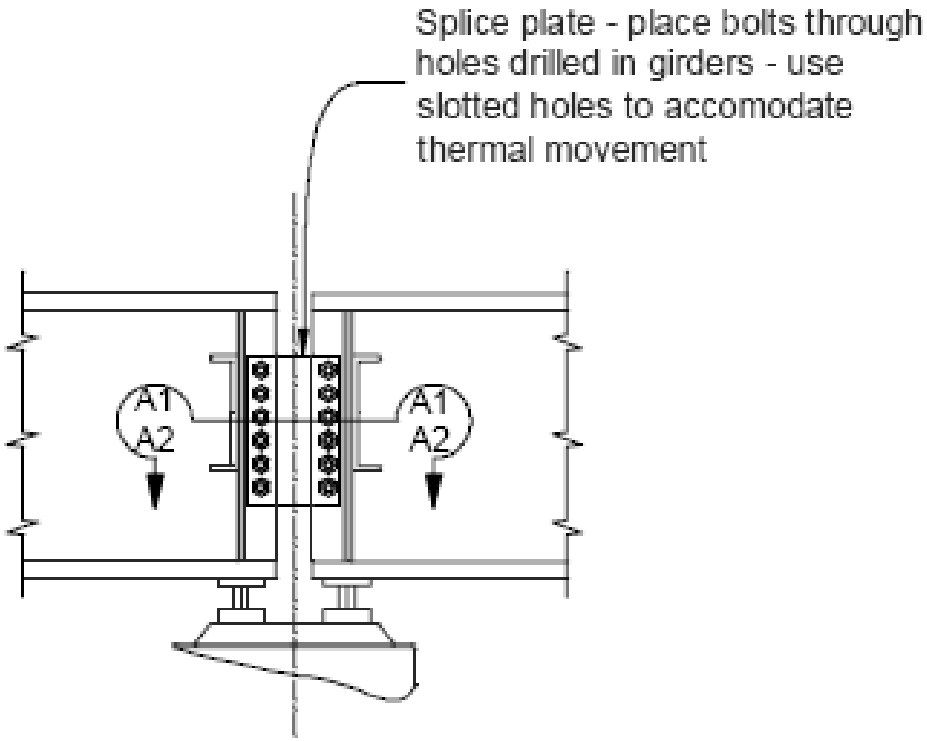

Elevation of Girders

Web splice details

- Shims may be required
- Use slotted holes at expansion joints
- Transverse restraint is required to prevent web tearing

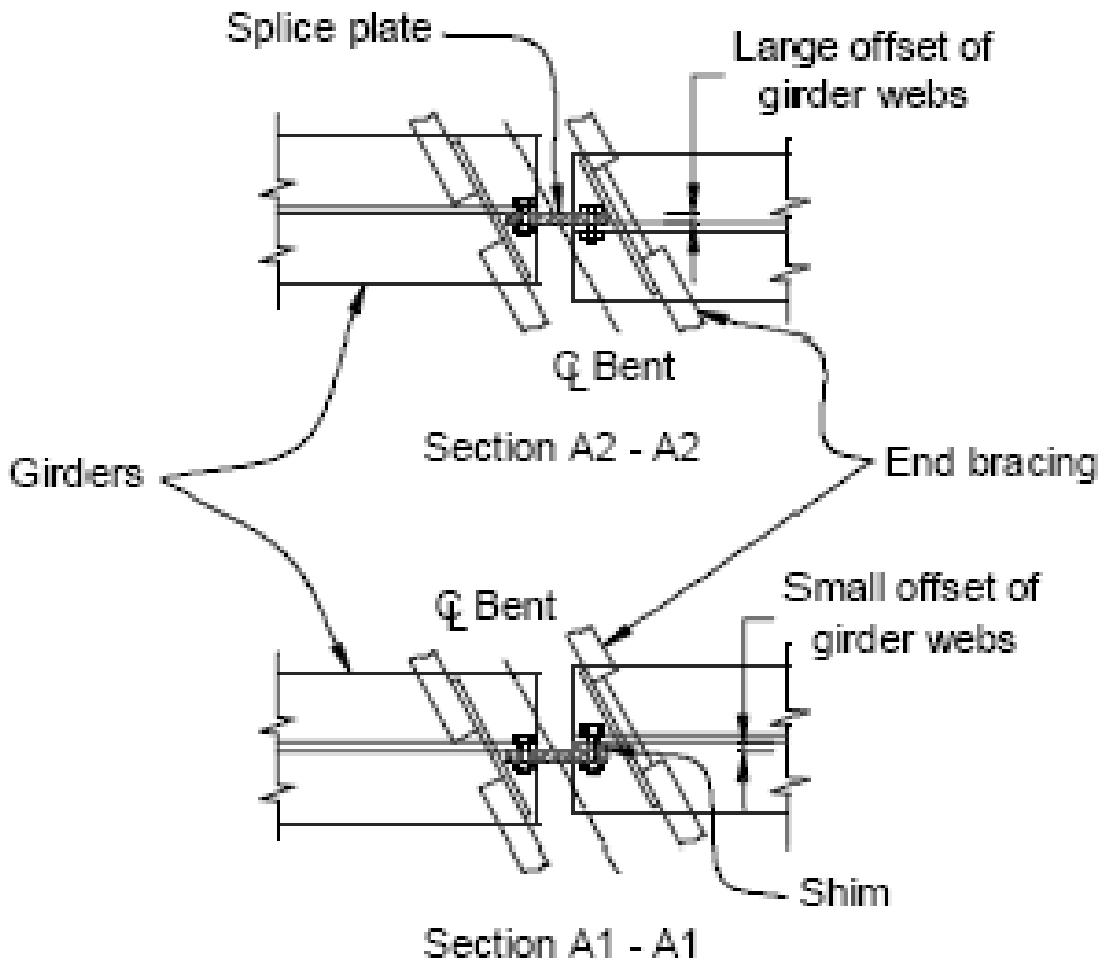

Methods for accomodating girder misalignment

Reduction of dead load

- Remove heavy barriers, overlay
- Replace deck with lightweight concrete

- Decreases natural period
  - Higher spectrum accelerations
  - Displacements reduced
  - Ductility demand reduced

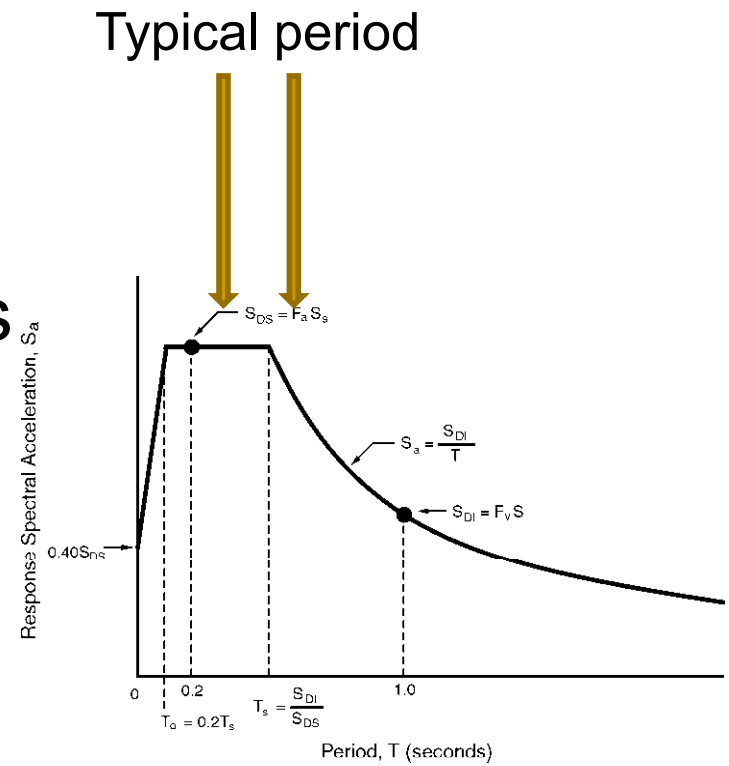

Elements to be retrofitted

- Bridge decks and girders
- Bearings, anchorages and pedestals

Federal Highway Administration
RESOURCE CENTER

Retrofit of bearings, anchorages and pedestals

- Strengthening of existing bearings
- Bearing replacement
- Strengthening superstructure to substructure connections

Strengthening of existing bearings

- Do not retrofit if:
  - Collapse mechanism is avoided…ie
    - Cap support is wide
    - Superstructure will drop only short distance
- Common bearing failure locations (steel)
  - Connection between girder and bearing
  - Connection between masonry plate and bearing
  - Anchor bolts

Strengthening of existing bearings

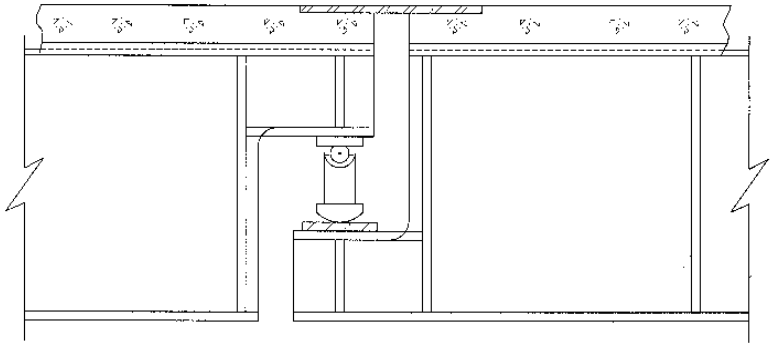

- Connections
  - Fixed bearings
    - Sole plate to girder
    - Bearing to masonry plate
    - Masonry plate to substructure
  - Expansion bearings
    - Sole plate to girder
    - Masonry plate to substructure

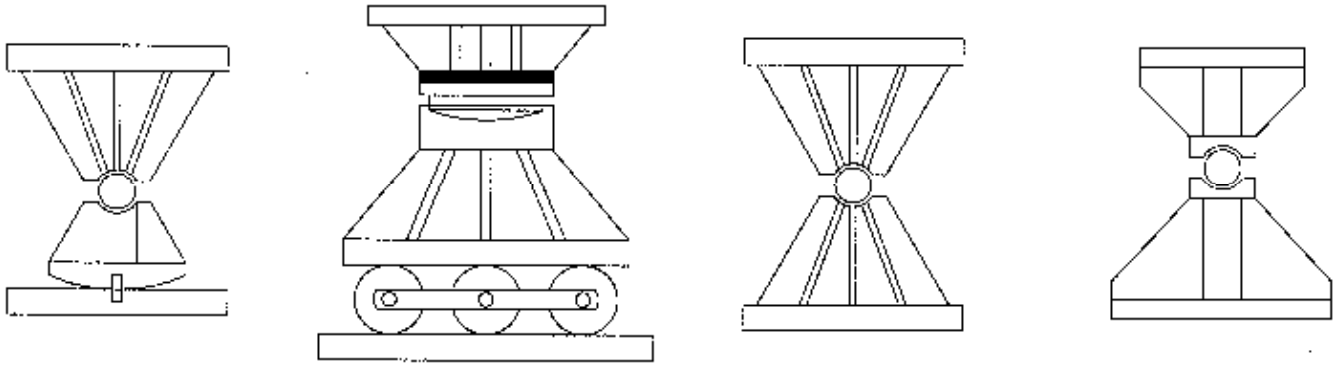

Bearing sole plate connection

- Use high strength bolts
- Consider double shear
- Check forces in flange

Bearing sole plate to girder retrofit

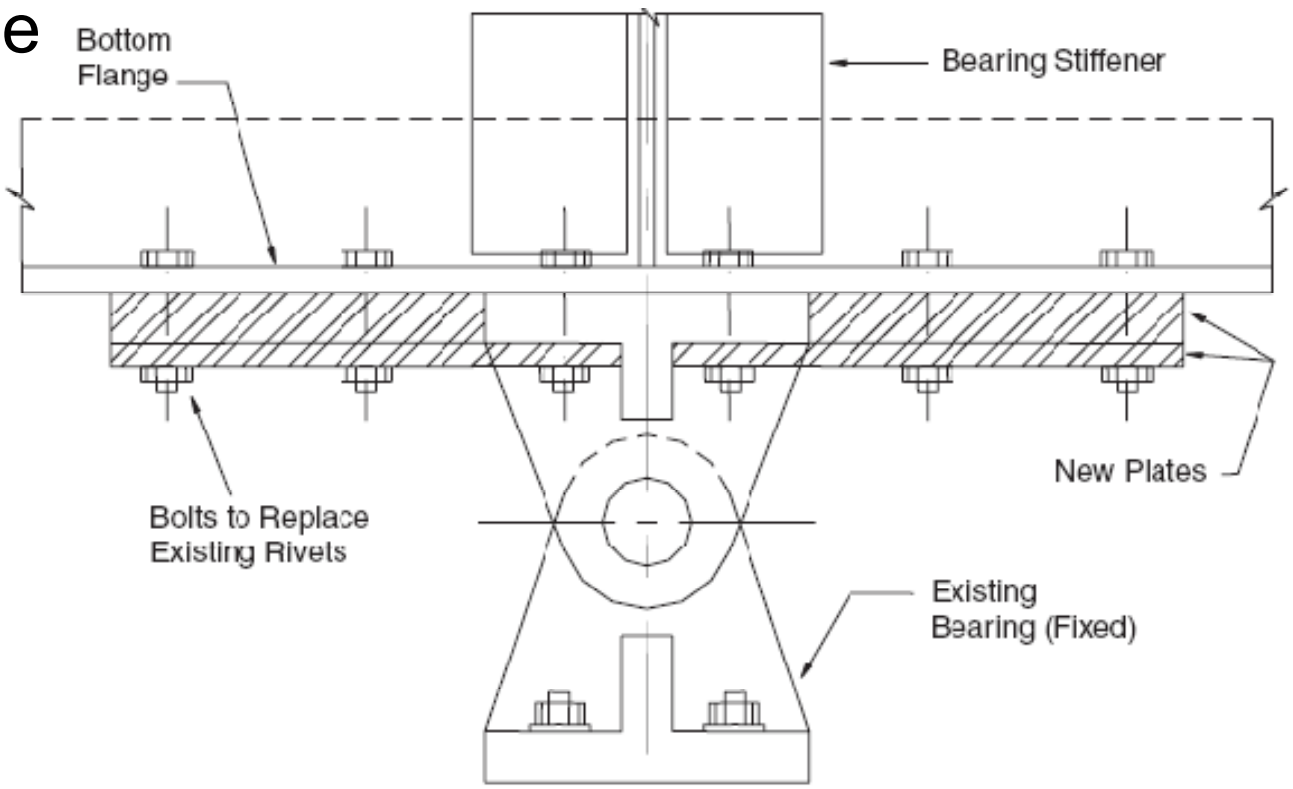

Anchor plate retrofit

- Masonry plates typically connected to substructure with anchor bolts
- Bolts must resist EQ shear
- Increase capacity with more HS bolts

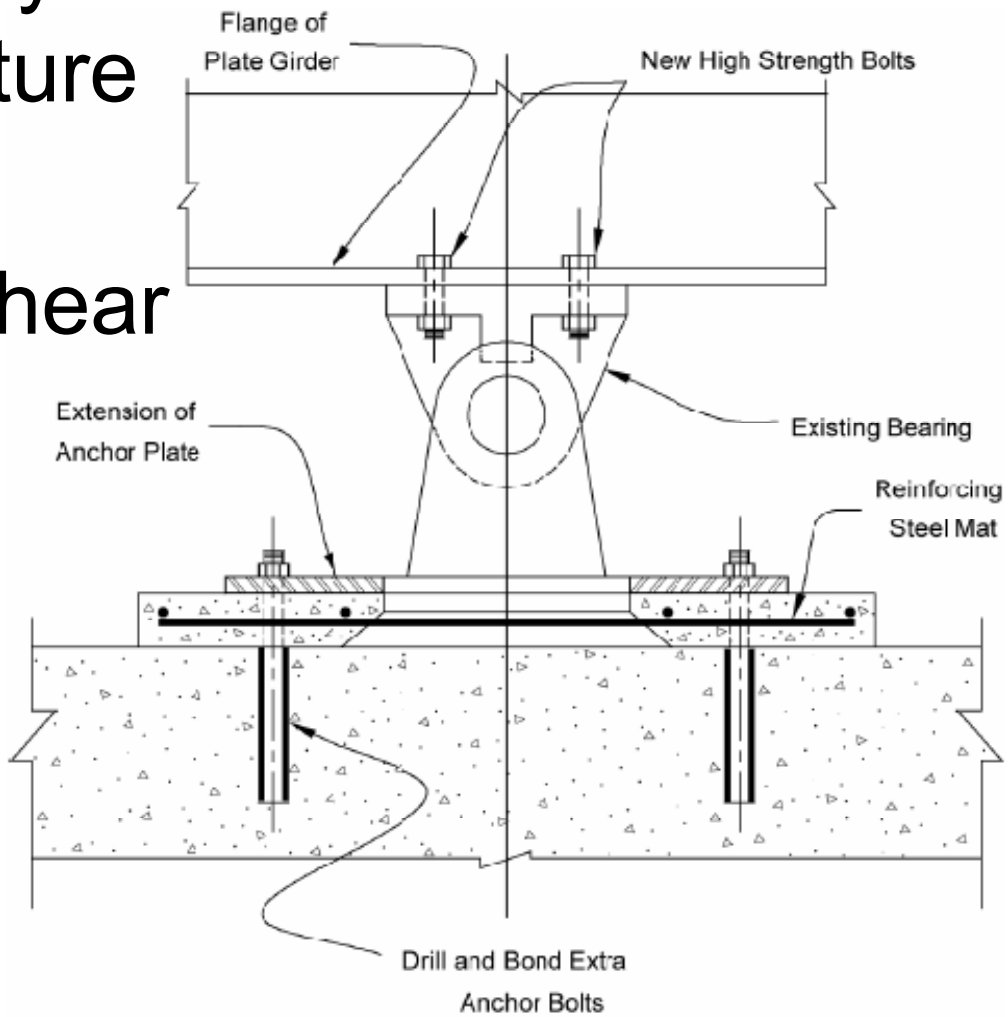

Federal Highway Administration
RESOURCE CENTER

Vulnerable tall bearing (fixed)

- Resists long & transverse forces
- Failure may shift to sole pl/girder connection

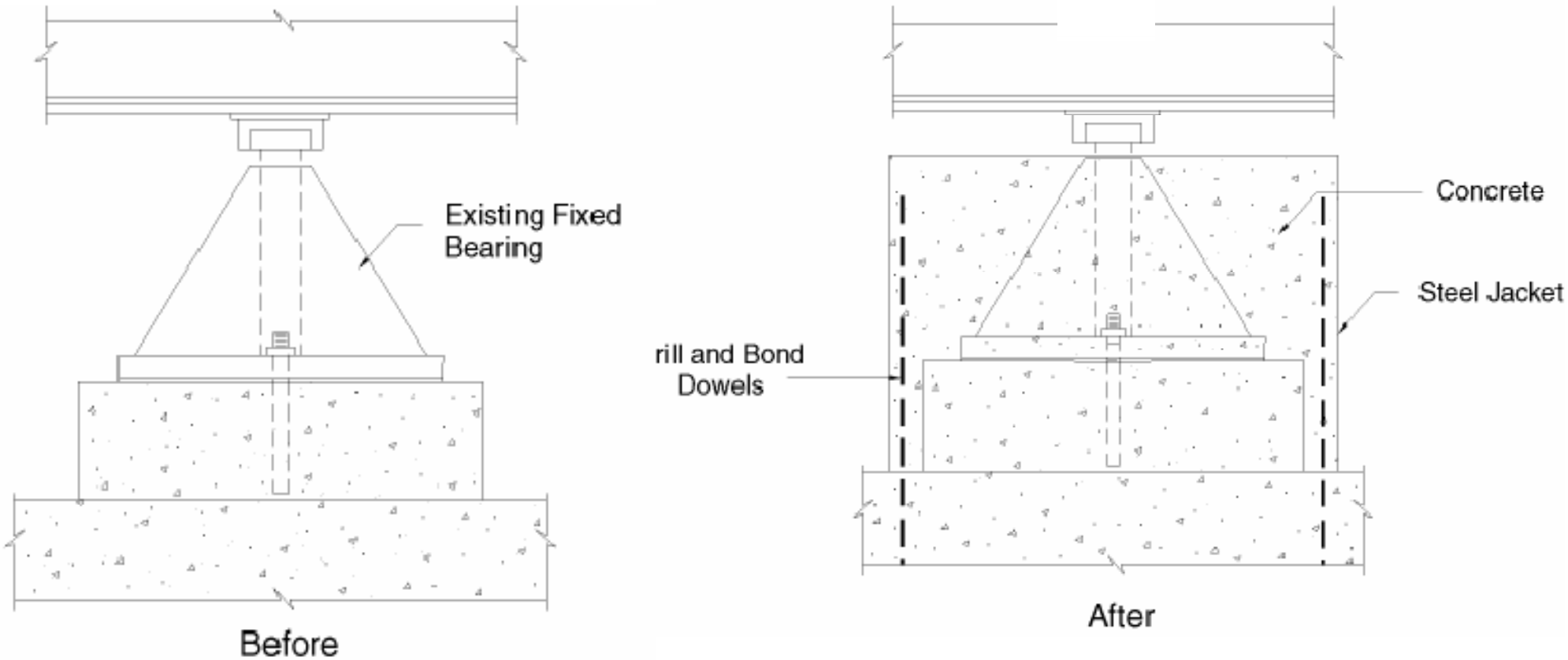

Bearing encasement retrofit

- Prevents transv. failure and toppling of bearings
- Limits vertical drop

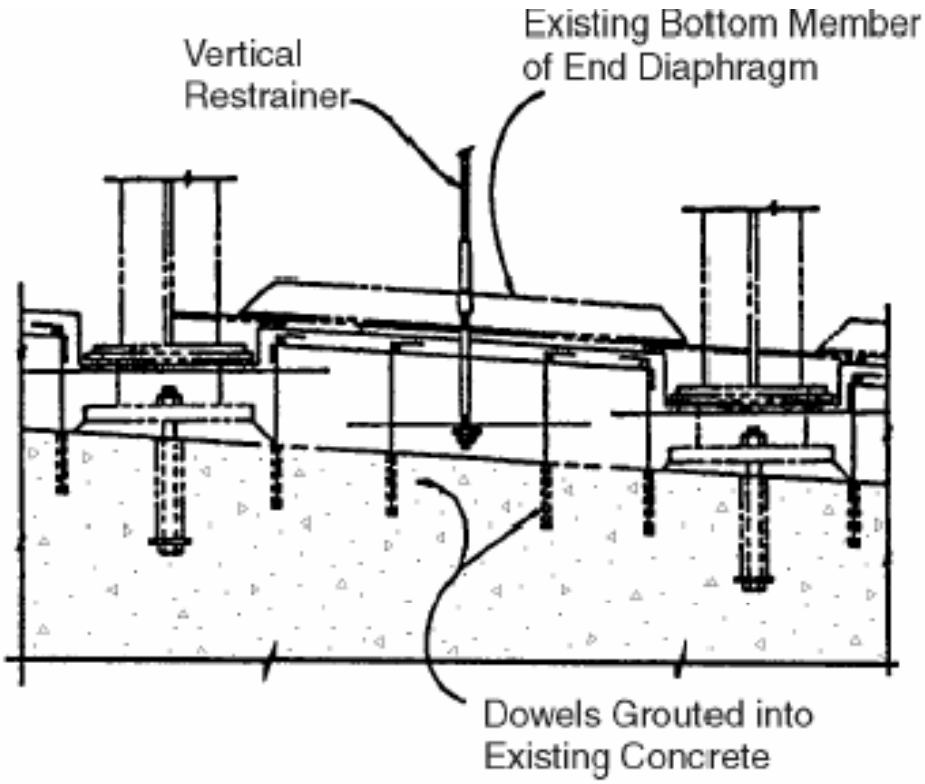

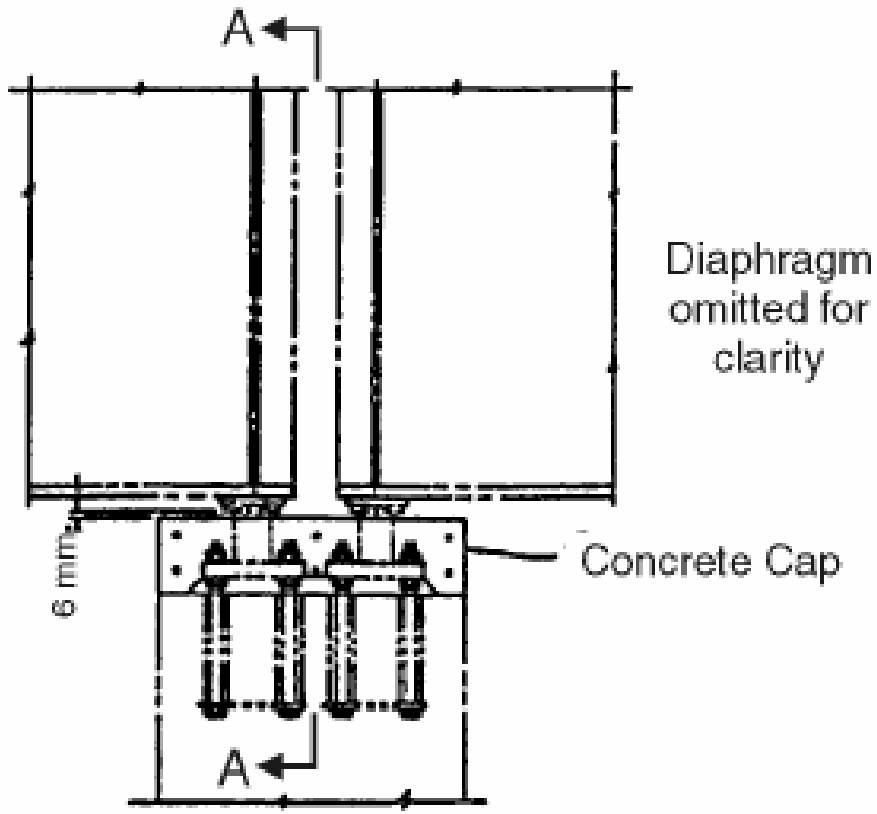

Modified Fixed Bearing at Pier

Vulnerable tall bearing (tall)

- $F_b = (DL) \tan \alpha$

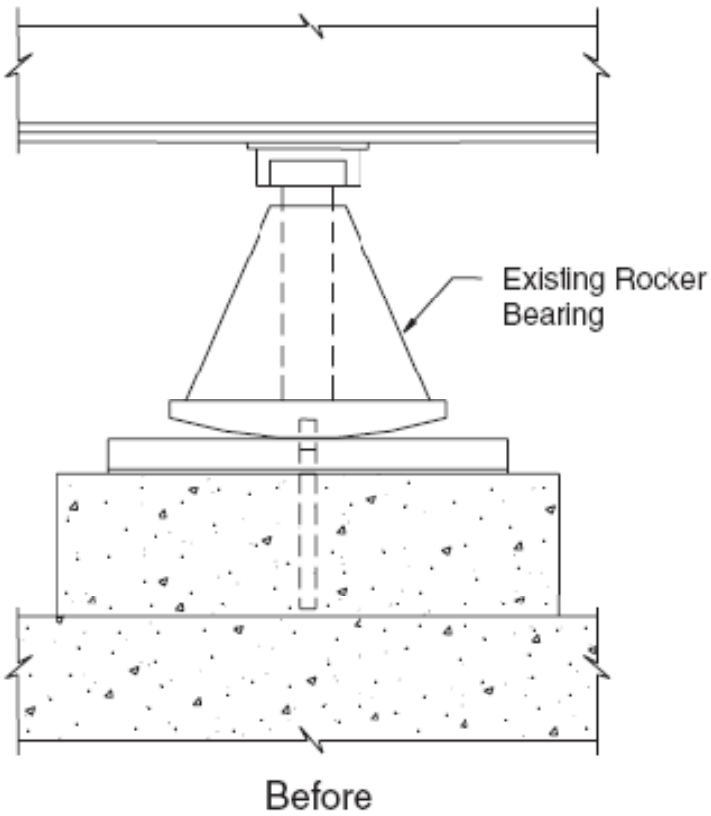

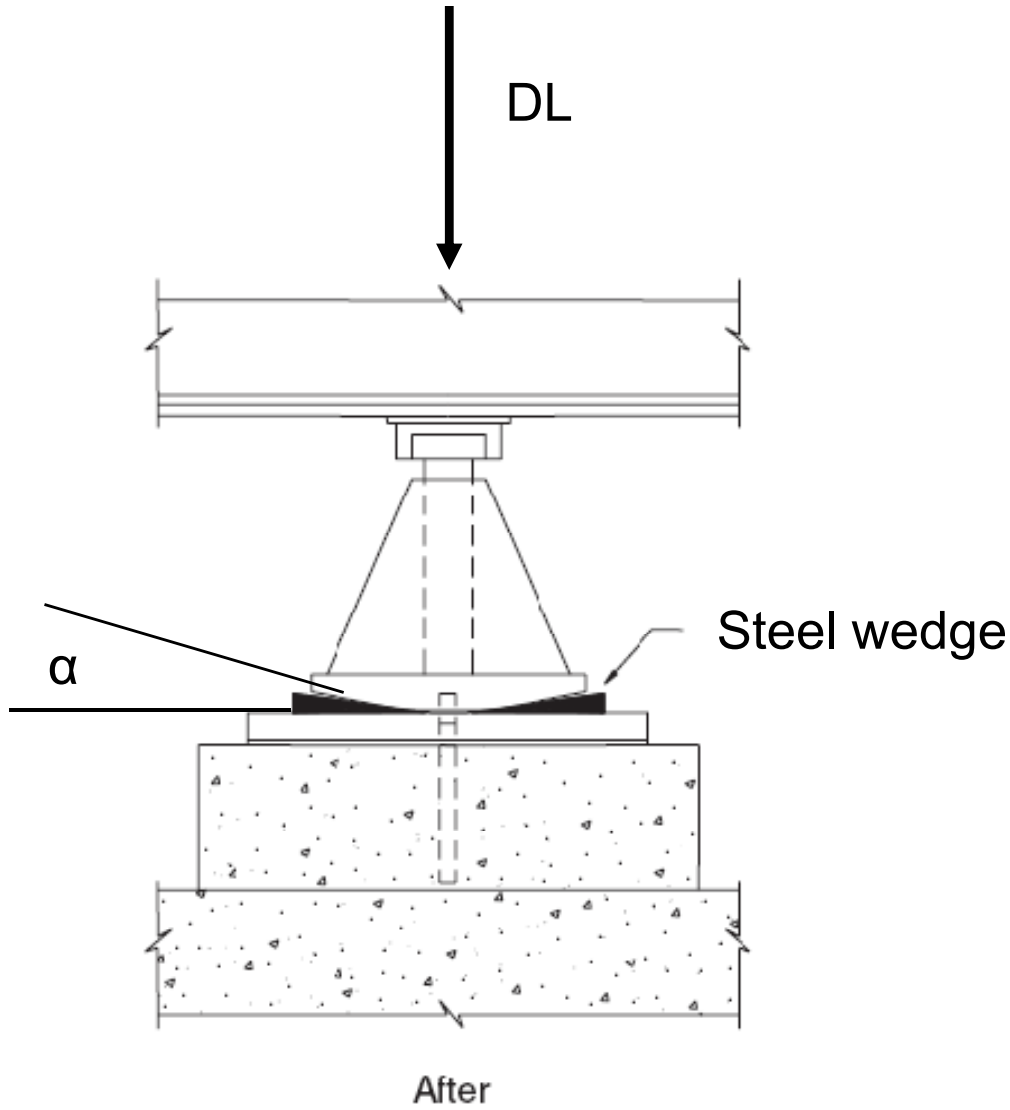

Bearing replacement

- Preferred bearing retrofit method
- Use same bearing at exp and fixed end to allow same rotation and preserve symmetry
- Increase “t” of pad-EQ forces are reduced

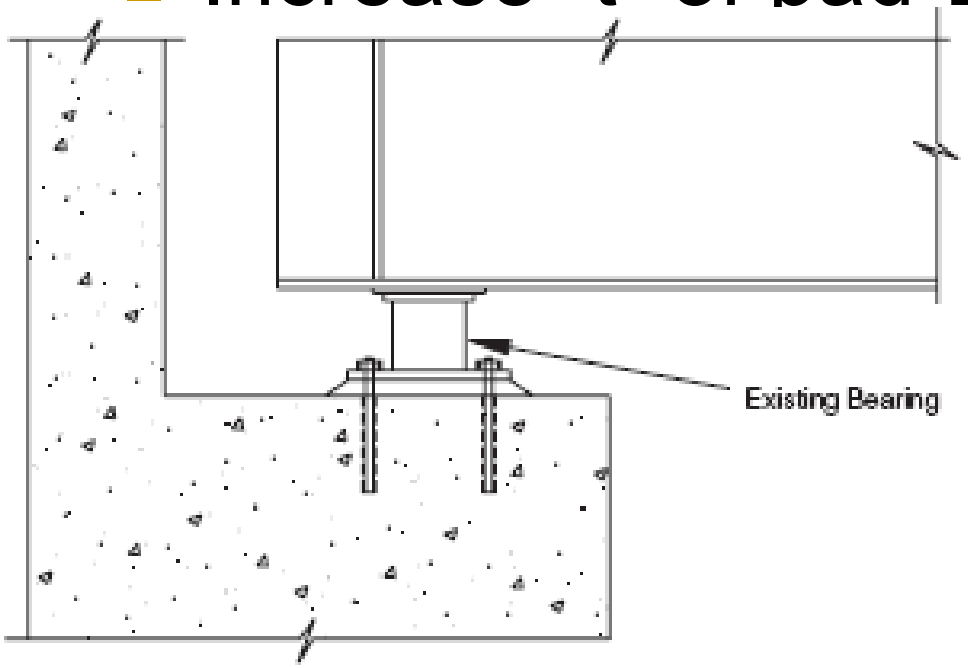

Before

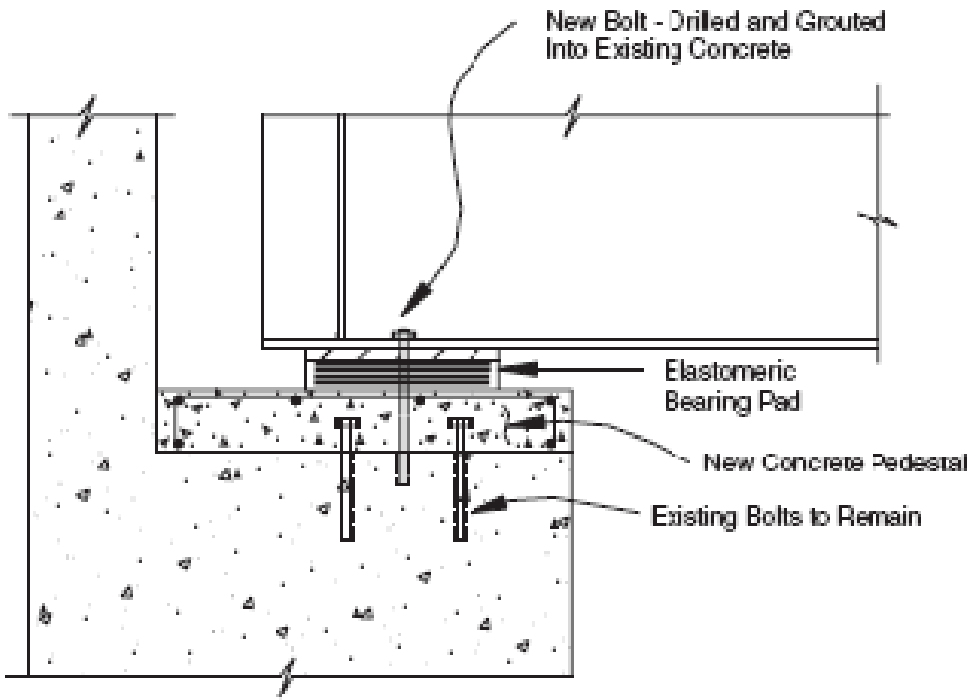

After

Federal Highway Administration
RESOURCE CENTER

Bearing replacement

- Isolation

Federal Highway Administration
RESOURCE CENTER

Bearing replacement

- Not suited for isolation
  - Bridges on soft soil (acc increases)
  - Long period structures (little is gained)
  - Extreme seismicity (large deflections)

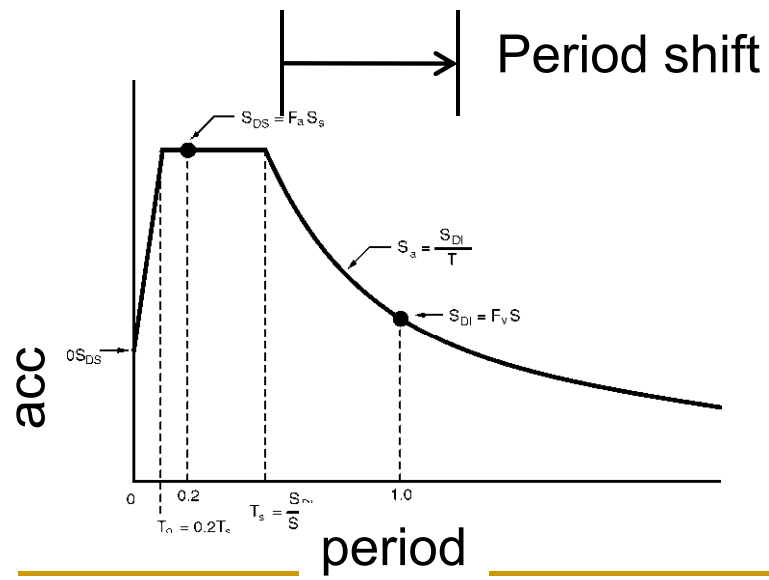

Federal Highway Administration
RESOURCE CENTER

Bearing seat extensions

- Seat extensions and catcher blocks
  - Use to reduce number of restrainer cables required
  - Use when too many restrainer cables are required to limit deflection to 67% available seat length

Abutment seat extenders

- Design 2 load cases
  - 2 x DL (account for impact)
  - DL + EQ (assumes structure falls and still under EQ force) Lesser of:
    - DL x Acc
    - DL x friction

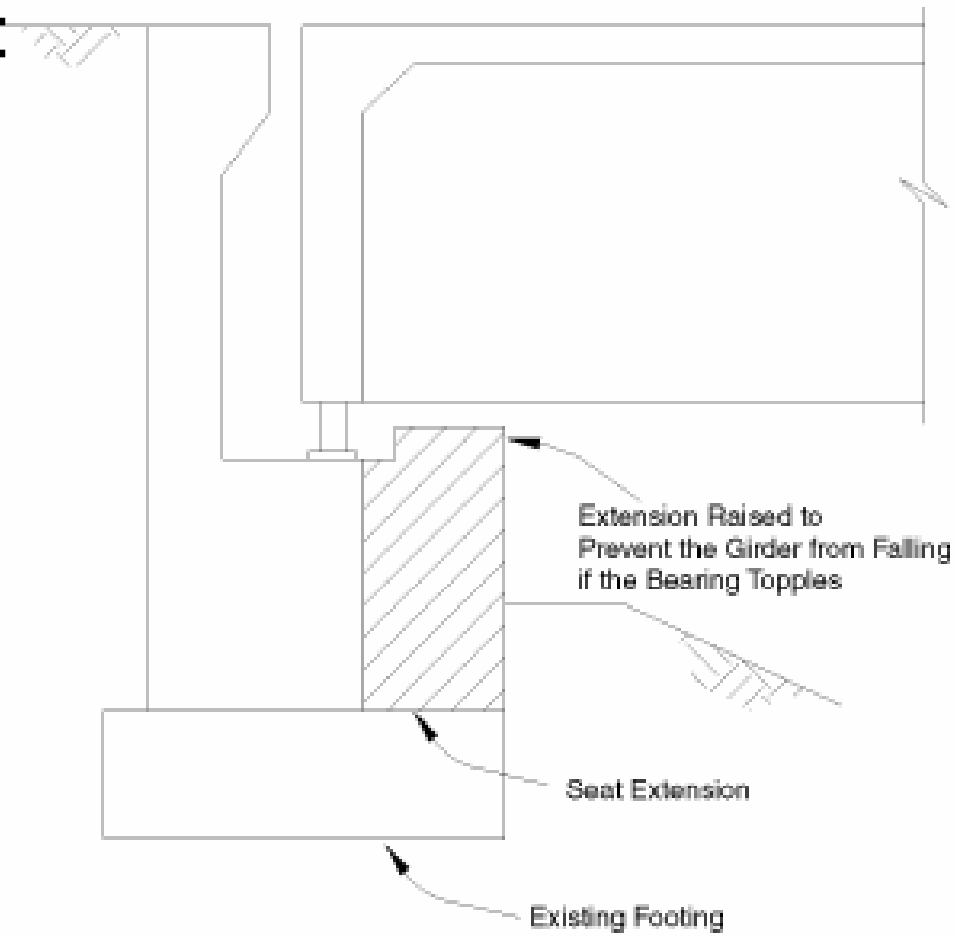

Abutment seat extenders

$$N(d) = \left[4.0 + 0.02L + 0.08H + 1.1\sqrt{H}\sqrt{1 + \left(2\frac{B}{L}\right)^2} \right] \frac{(1 + 1.25F_v S_1)}{\cos\alpha}$$

N = recommended support length (in)
L = length of bridge from seat to adjacent expansion joint (ft)
H = height (ft)
B = width (ft)
α = skew angle

Abutment seat extenders

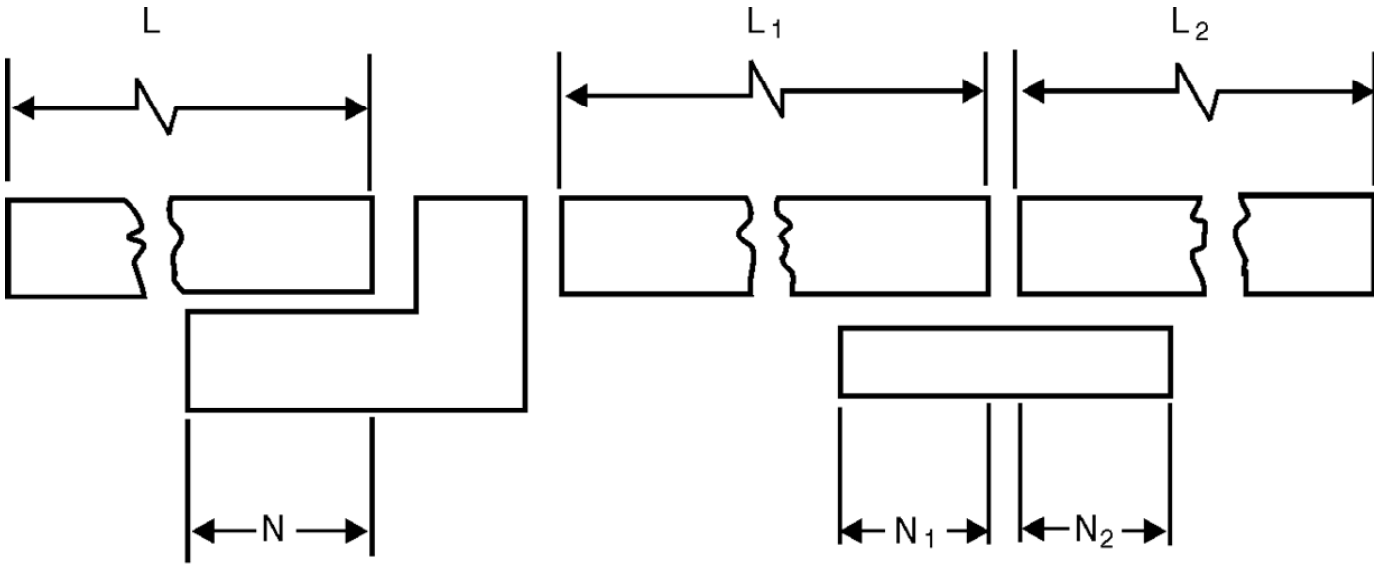

Abutment

Column or Pier

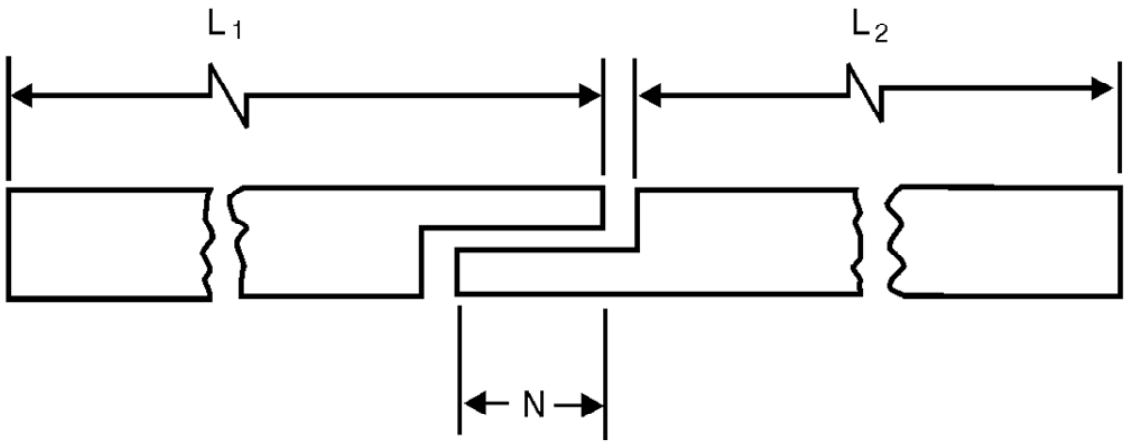

Hinge Within a Span

Federal Highway Adr
RESOURCE CEI

Cable Restrainers

Federal Highway Administration
RESOURCE CENTER

Caltrans cable restrainer detail

- ¾” cable (same as used for guardrail)
- Failure about 4.5”-5” elongation w/ 9.5’ cable
- Axial forces will be applied to superstructure

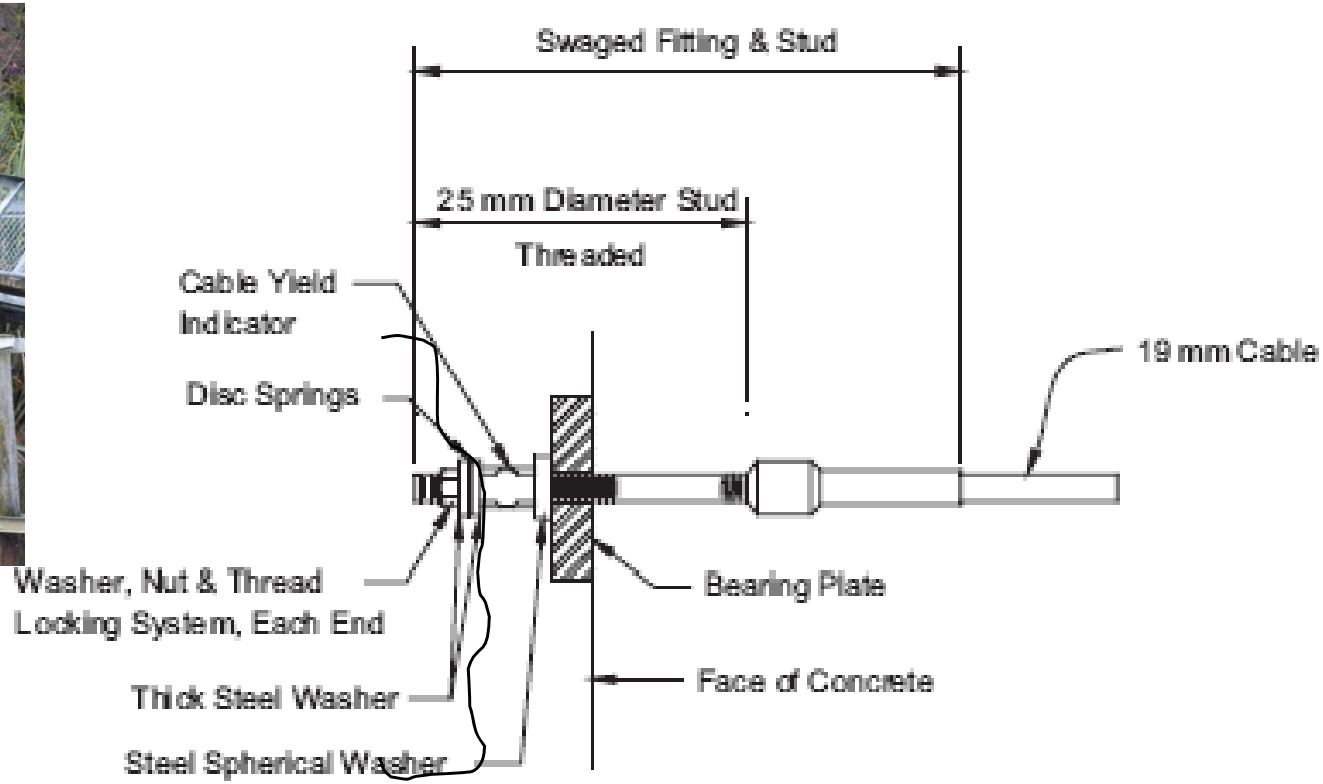

Federal Highway Administration
RESOURCE CENTER

Precast girder anchorage

- Minimize damage to reinforcing steel

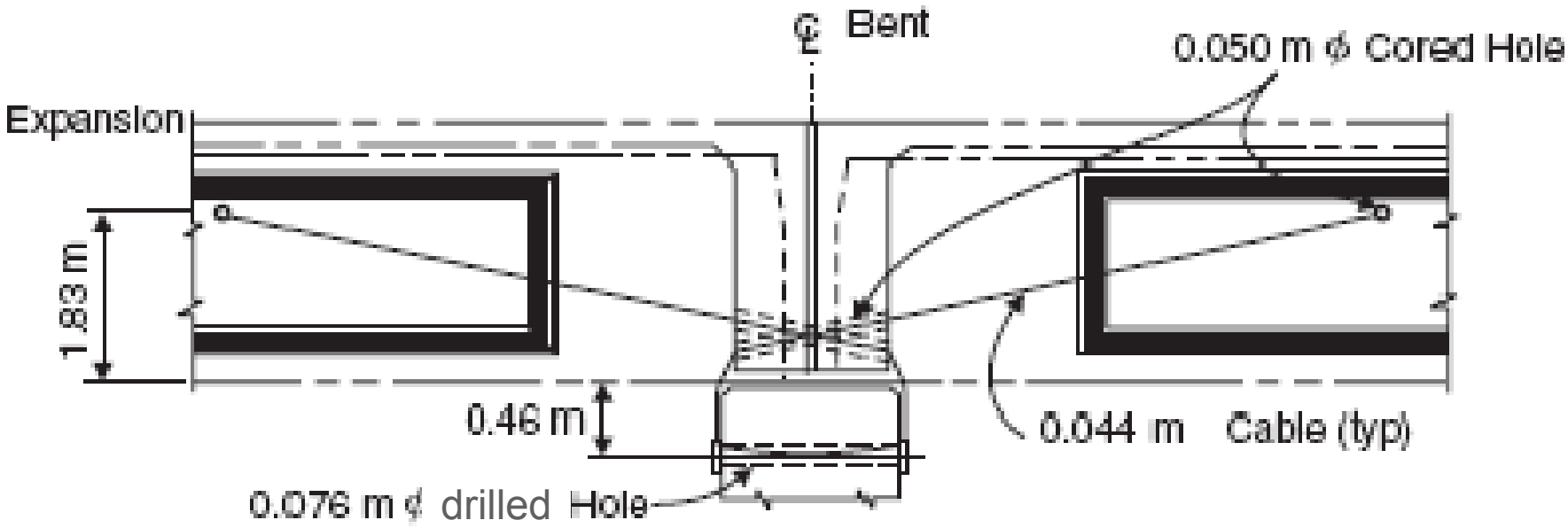

Restrainer at pier

- Provide positive connection at pier
- When joint closes, restrainer must resist mass from both spans

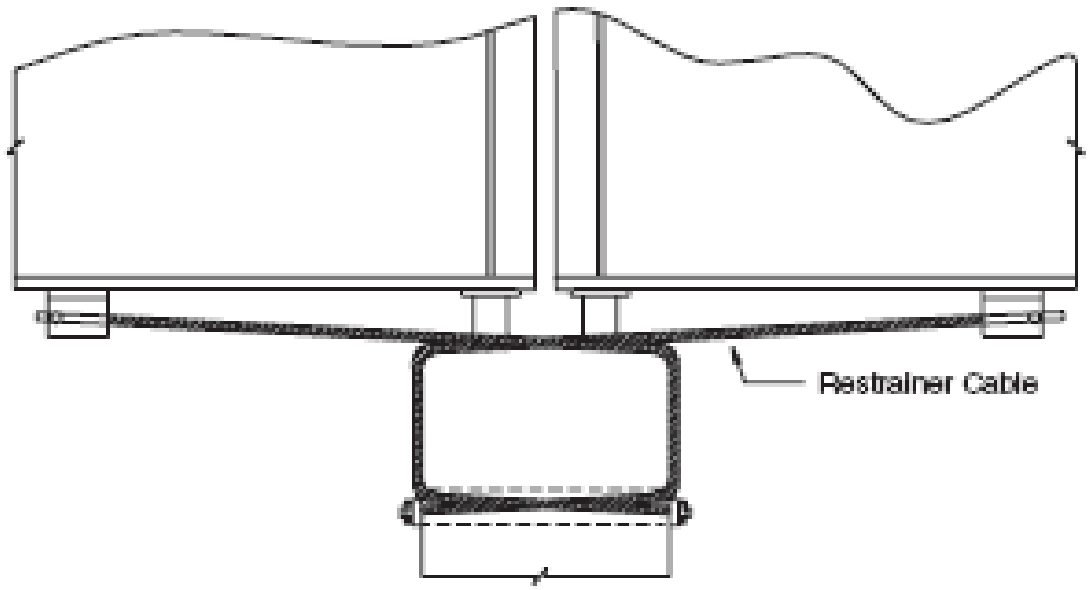

Restrainer orientation

- Place in direction of movement
  - Rigid supports

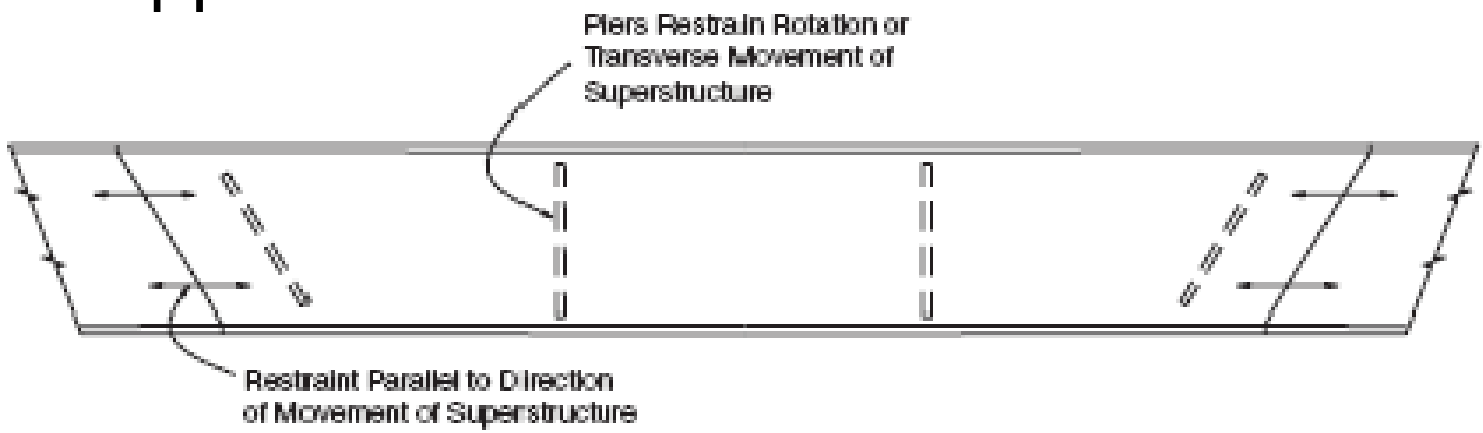

  - Flexible supports

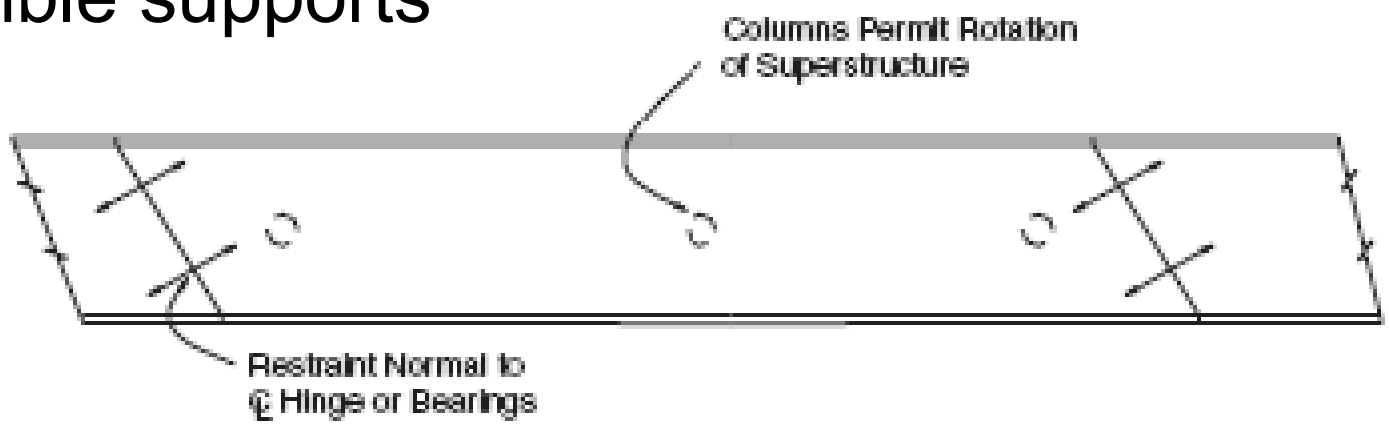

EXAMPLE
Cable restrainer design
(non iterative procedure)

- Single step method
  - 1) Calculate maximum allowable expansion joint displ.
  - 2) Compute unrestrained relative expansion joint displ.
  - 3) Find required restrainer stiffness
  - 4) Calculate number of required restrainers
- Valid if:
  - Ratio of structural periods > 0.6 (T_{small}/T_{large})
  - Ratio of restrainer capacity/unrestrained capacity is between 0.2 and 0.5

Structural configuration

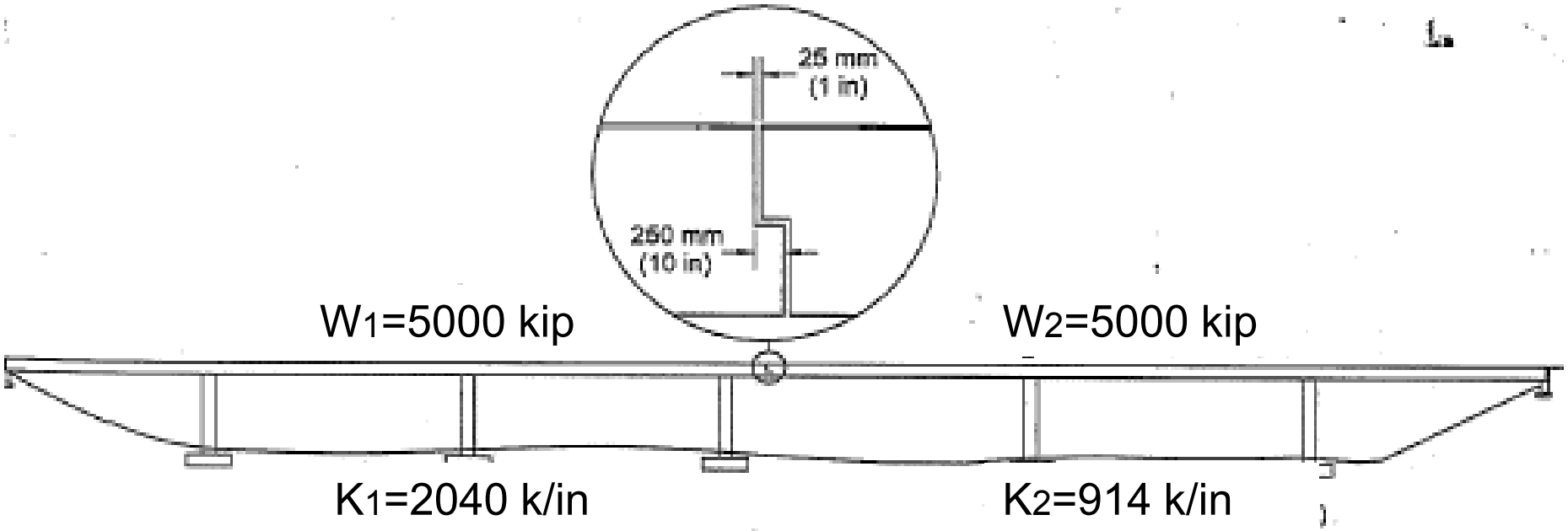

Data

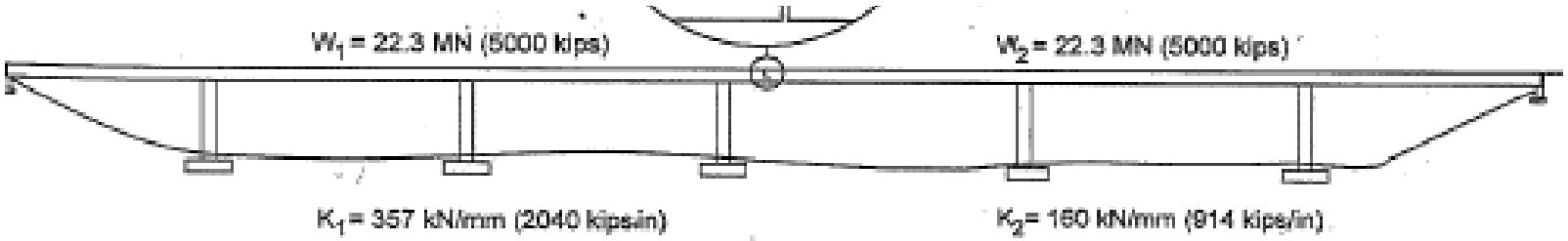

- Seat length (N)= 10”
- Concrete cover (dc)= 2”
- Restrainer yield stress (fy)= 176 ksi
- Restrainer mod of elast (E)= 10000 ksi (pre tension)
- Restrainer length (Lr)= 9.8 ft
- Restrainer slack (Drs)= 1”
- Displacement ductility (μ)= 4
- Frame stiffness (k1 & k2)= 2040 k/in and 914 k/in
- Frame weight (w1=w2)= 5000 kip

Acceleration coefficients

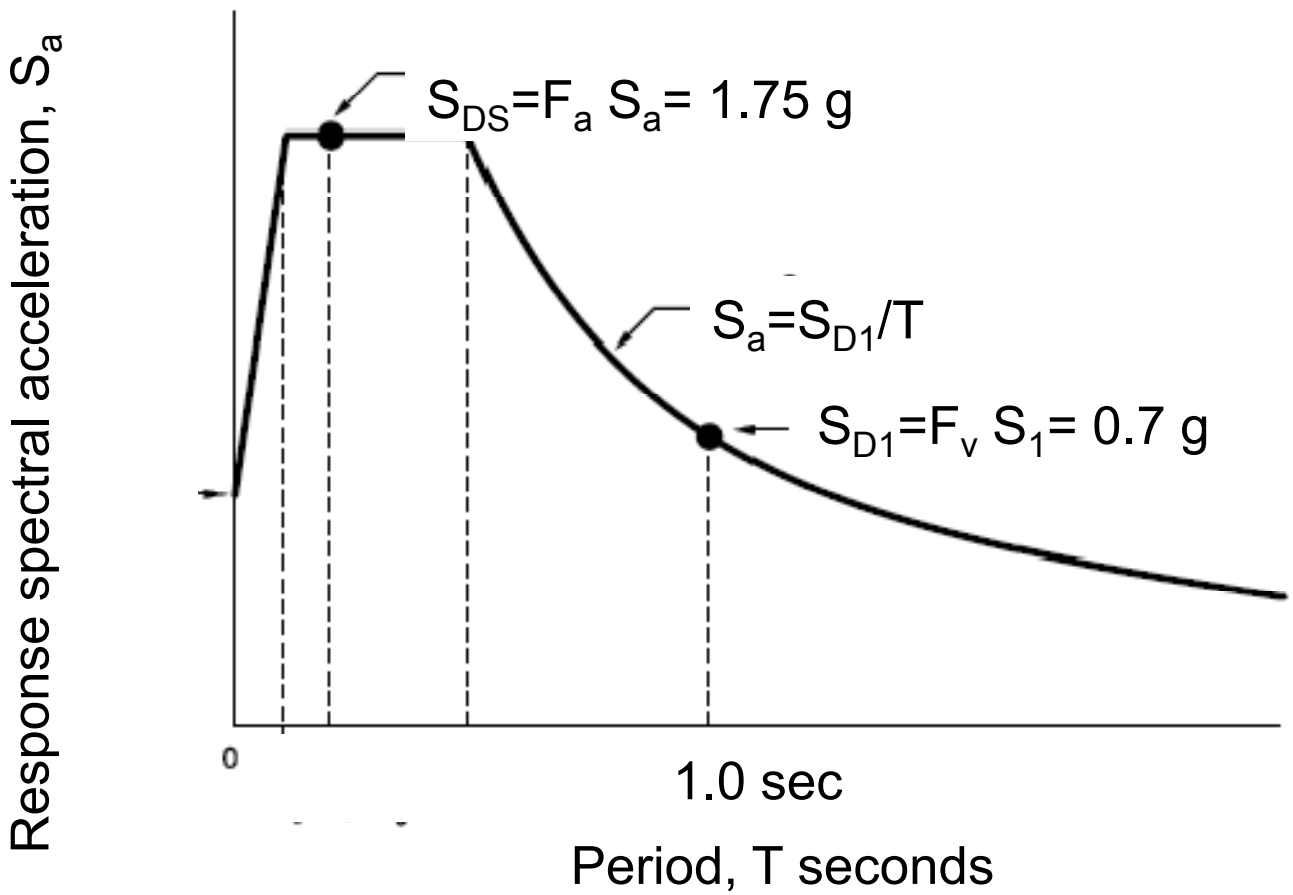

Federal Highway Administration
RESOURCE CENTER

1) Maximum expansion joint displacement

- Step 1) Restrainer elongation at yield

$$D_y := f_y \cdot \frac{L_r \cdot 12}{E}$$ 176 x (9.8x12)/10000 $D_y = 2.07\,\text{in}$

- Displacement capacity of restrainer

$$D_r := D_y + D_{rs}$$ 2.07 +1= $D_r = 3.07\,\text{in}$

- Available seat length

$$D_{as} := N - gap - 2 \cdot d_c$$ 10-1-(2x2)= $D_{as} = 5\,\text{in}$

- Check if restrainer elongation is ok

(is restrainer capacity << seat length)

$$\frac{2}{3} \cdot D_{as} = 3.33\,\text{in}$$ >>??? $D_r = 3.07\,\text{in}$

Federal Highway Administration RESOURCE CENTER

OK –continue with design

2) Unrestrained relative expansion joint displacement

- Joint displacement without restrainers
- pier 1

$$k_{eff\_1} := \frac{k_1}{\mu}$$ 2040/4= $$k_{eff\_1} = 510 \frac{kip}{in}$$

- pier 2

$$k_{eff\_2} := \frac{k_2}{\mu}$$ 914/4= $$k_{eff\_2} = 228.5 \frac{kip}{in}$$

2) Unrestrained relative expansion joint displacement

- Natural period
  - frame 1

$$\omega_1 := \sqrt{\frac{k_{eff\_1}}{W_1 \cdot \frac{1}{g \cdot 12}}} \qquad \omega_1 = 6.28 \frac{rad}{sec}$$

$$Teff_1 := \frac{2 \cdot \pi}{\omega_1}$$

$$Teff_1 = 1\,sec$$

  - frame 2

$$\omega_2 := \sqrt{\frac{k_{eff\_2}}{W_2 \cdot \frac{1}{g \cdot 12}}} \qquad \omega_2 = 4.2 \frac{rad}{sec}$$

$$Teff_2 := \frac{2 \cdot \pi}{\omega_2}$$

$$Teff_2 = 1.5\,sec$$

Federal Highway Administration
RESOURCE CENTER

3) Required restrainer stiffness

- Damping coefficient

$$\xi_{eff} := .05 + \frac{1 - \frac{.95}{\sqrt{\mu}} - .05 \cdot \sqrt{\mu}}{\pi}$$

$$\xi_{eff} = 0.19$$

- Correct 5% damping in response spectrum

$$c_d := \frac{1.5}{40 \cdot \xi_{eff} + 1} + .5$$

$$c_d = 0.68$$

3) Required restrainer stiffness

- Response spectrum accelerations (5% damping)

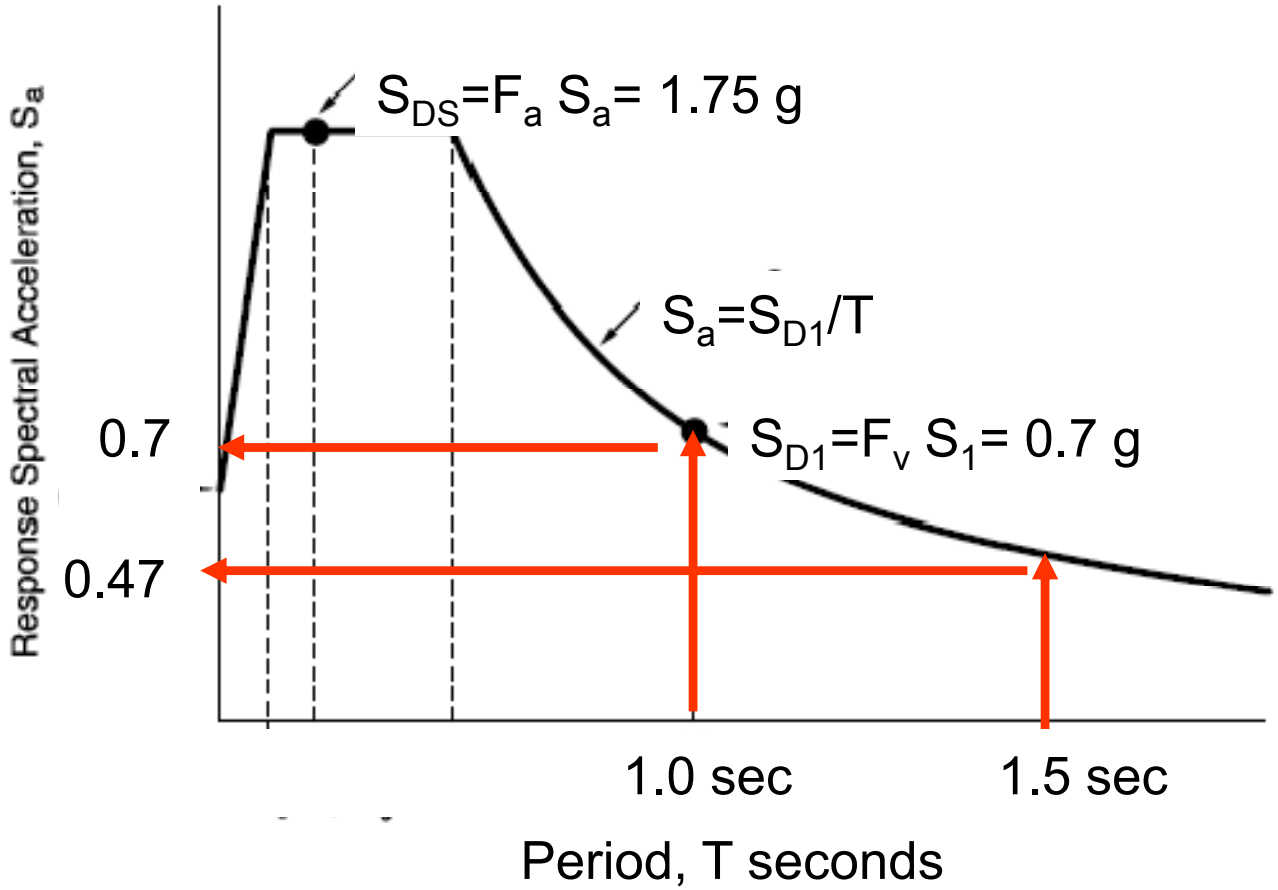

Federal Highway Administration
RESOURCE CENTER

3) Required restrainer stiffness

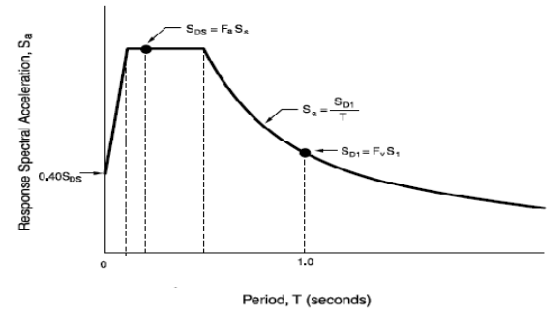

- Unrestrained deflections
- Span 1

F=Ma

$$F_1 := \frac{W_1}{\cancel{g \cdot 12}} \cdot \left[\frac{FvS1}{Teff_1} \cdot \cancel{(12g)} \cdot c_d \right]$$

$$F_1 = 2372.19\,kip$$

- Span 2

$$F_2 := \frac{W_2}{\cancel{g \cdot 12}} \cdot \left[\frac{FvS1}{Teff_2} \cdot \cancel{(12g)} \cdot c_d \right]$$

$$F_2 = 1587.84\,kip$$

$$D_1 := \frac{F_1}{k_{eff\_1}}$$

$$D_1 = 4.65\,in$$

$$D_2 := \frac{F_2}{k_{eff\_2}}$$

$$D_2 = 6.95\,in$$

Federal Highway Administration
RESOURCE CENTER

3) Required restrainer stiffness

- Relative displacement demand (SRSS or CQC)

$$D_{eq0} := \sqrt{D_1^2 + D_2^2} \qquad D_{eq0} = 8.36\,\text{in}$$

- Check displacement with available seat

$$D_{eq0} = 8.36\,\text{in} \qquad << ??? \qquad \frac{2}{3} D_{as} = 3.33\,\text{in}$$

NG

Restrainers required

3) Required restrainer stiffness

- Check if non-iterative procedure is valid
  - Ratio of periods

$$\frac{T_{eff.1}}{T_{eff.2}} = 0.67$$ >?? 0.6 OK

  - (Restrained displacement capacity/unrestrained displacement demand) ratio

$$\eta := \frac{D_r}{D_{eq0}}$$ 3.07/8.36= $\eta = 0.37$ Between 0.2 and 0.5 OK

Structural Model

Frame stiffness and mass-(stiffness is in series)

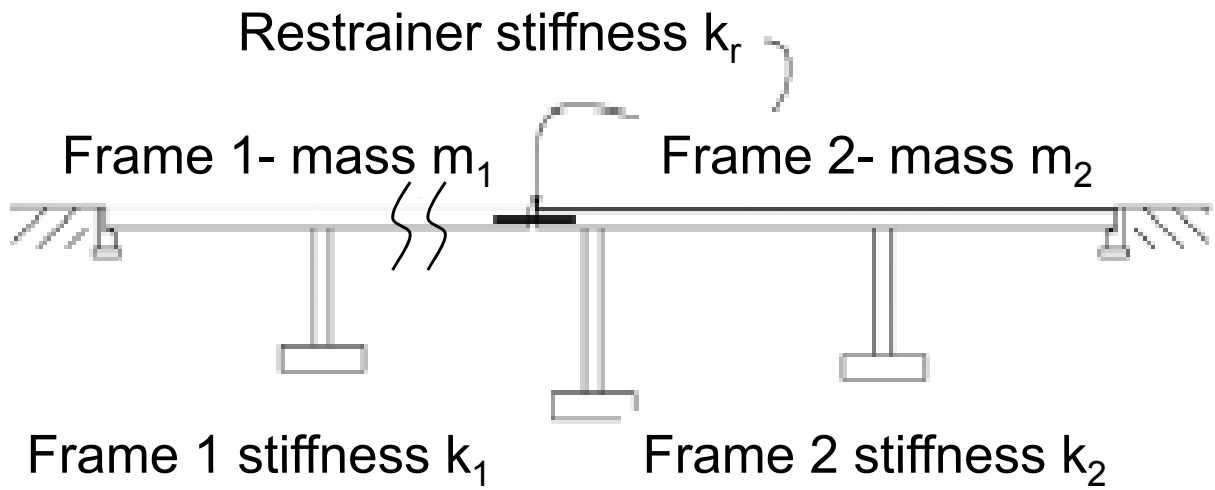

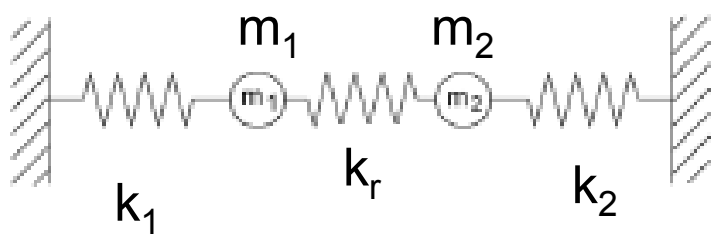

4) Number of restrainers required

- Area of restrainer $A_r := .222 \quad in^2$

- Number required

$$N_r := \frac{Kr_2 \cdot D_r}{f_y \cdot A_r}$$

F=kΔ

$$Kr := K_{eff\_mod} \cdot \left(.5 + \frac{.5 - \eta^2}{\eta} \right)$$

1/keff_mod=1/k1 +1/k2

4) Number of restrainers

1/keff_mod=1/k1 +1/k2

- Required restrainer stiffness

$$Kr := K_{eff\_mod} \cdot \left(.5 + \frac{.5 - \eta^2}{\eta} \right)$$

$$Kr = 235.89 \frac{kip}{in}$$

- Required number of restrainers

$$f_y \cdot A_r \cdot N_r = Kr\ Dr$$

$$Nr = \frac{235.89x3.07}{176x.22}$$

$$N_r = 18.53$$

Say 20 to be symmetrical

Comparison with “CQC” method

Item	SRSS	CQC
Relative displacement	8.36”	9.8”
Displacement ratio	0.37	0.48
Restrainer stiffness	256 k/in	165 k/in
# of restrainers	19	14

Transverse restrainers

- Vulnerable conditions
  - High concrete pedestals
  - Narrow bearing seats
  - Highly skewed seats
  - Steel rockers
  - Transverse edge distance

Transverse shear keys

- Design to remain elastic
- Diaphragms must transfer the force

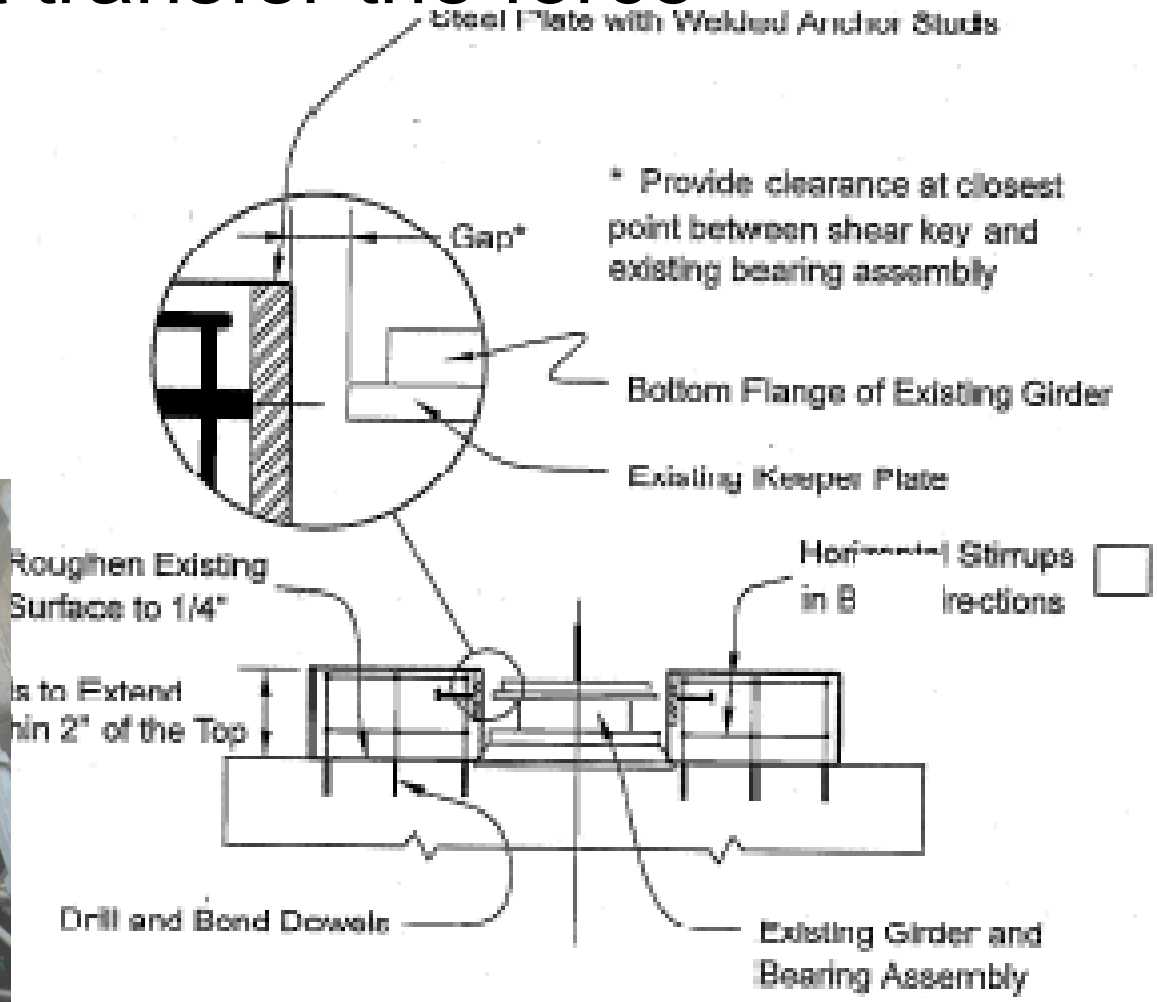

Vertical motion restrainers

- Prevent uplift when DL < EQ (vertical)
- Not economical unless additional retrofit is performed

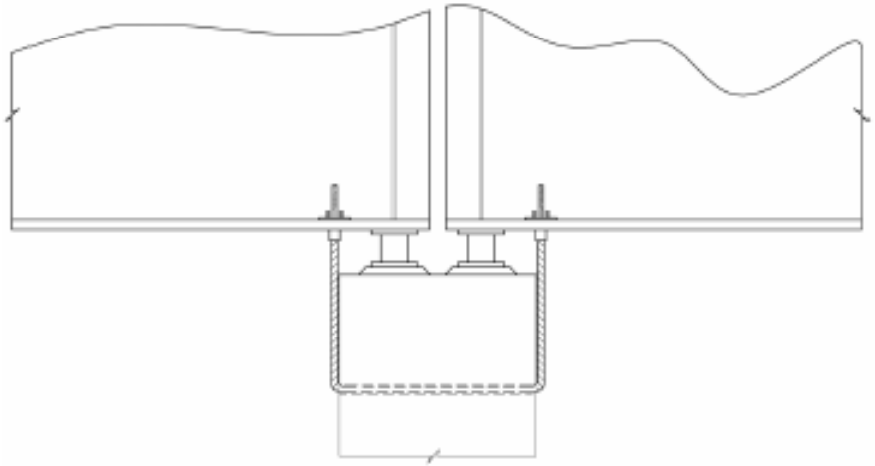

Vertical motion restrainers

Member Force / Moment	Distance from Fault (km), D				
	0≤ D<10	10≤D<20	20≤D<30	30≤D<40	D ≥ 40
Pier axial force	0.7	0.3	0.2	0.1	0.1
Superstructure shear force at pier	0.7	0.4	0.2	0.1	0.1
Superstructure bending moment at pier	0.6	0.3	0.2	0.1	0.1
Superstructure shear force at mid-span	0.1	0.1	0.1	0.1	0.1
Superstructure bending moment at mid-span	1.4	0.7	0.4	0.3	0.2

Note:
The dead load multipliers given above are in addition to the dead load. Thus the actual 'load factor' is 1.0 plus/minus the tabulated values.

Vertical Load=(1 ± Cv) DL

Summary

- Describe typical retrofit measures for:
  - Bridge decks and girders
  - Bearings, anchorages and pedestals
  - Expansion joints

- What questions do you have?