INDIANA DEPARTMENT OF TRANSPORTATION

STANDARDS COMMITTEE MEETING

Driving Indiana's Economic Growth

FINAL DRAFT MINUTES

September 18, 2008 Standards Committee Meeting

FINAL DRAFT MINUTES

MEMORANDUM

October 8, 2008

TO: Standards Committee

FROM: Mike Milligan, Secretary

RE: Minutes for the September 18, 2008 Standards Committee Meeting

The Standards Committee meeting was called to order by the Chairman at 9:06 a.m. on September 18, 2008 in the N755 Bay Window Conference Room. The meeting was adjourned at 10:34 a.m.

The following members were in attendance:

Mark Miller, Chairman
Dennis Kuchler, Constr. Mgmt.
Ron Heustis, Constr. Mgmt.
Lalit Garg*, Traffic Control
Ron Walker, Materials Mgmt.
Tom Caplinger, Crawfordsville Dist.
Dave Andrewski, Pvmt. Engineering
Bob Cales, Contract Admin.
John Wright, Roadway Services
Anne Rearick, Structural Services
Jim Keefer, Fort Wayne Dist.

** Proxy for Larry Rust*

Also in attendance were the following:

Mike Milligan, Secretary
Tom Carrow, INDOT
Tom Harris, INDOT
Tony Uremovich, INDOT
Steve Fisher, INDOT
Shakeel Baig, INDOT
Paul Berebitsky, ICA
Robert Dirks, FHWA
Bren George, FHWA
Mike Byers, Indiana ACPA
Brad Schneider, Specialties Company
Gerry Huber, Heritage Research Group
Brad Cruea, Milestone Contractors
Tom Duncan, FHWA

Page No.

A. GENERAL BUSINESS ITEMS

OLD BUSINESS

(No items on this agenda)

NEW BUSINESS

1. Approval of August 18, 2008 Minutes

The Final Draft Minutes were revised as follows:

Comment from Mr. Heustis:
Page 2 – Breakaway Delineator Item
Replace “delineators” with “delineator posts”

Page 16 – Comment from Mr. Heustis: “polystyrene should be flush” is inaccurate. “Beam will be flush with top of construction joint” is more appropriate.
No change to minutes needed. Designer will make correction to detail.

Page 19 – Mr. Heustis commented that the double asterisk should be changed to a single asterisk.

Page 27 –Ms. Rearick commented that table should be consistent with tables in Items 16-19 and 16-20 (pages 28 and 29) by replacing heading title “ASTM” with “TEST METHOD” and adding “ASTM” before each ASTM specification cited. Mr. Heustis commented that the Recurring Special Provision created for this agenda item has made this correction.

Motion: Mr. Cales
Second: Mr. Andrewski
Ayes: 10
Nays: 0

2. Mr. Tom Duncan of FHWA discussed the FHWA Indiana Division reorganization and introduced Robert Dirks and Bren George of FHWA. Mr. Dirks will be the FHWA representative to the Standards Committee. Mr. George will be the alternate representative.

3. Mr. Andrewski discussed the Commissioner’s directive that INDOT implement the Mechanistic-Empirical Pavement Design Guide, MEPDG, and Alternate Bidding (asphalt and concrete) as soon as possible. IDM Chapter 52 will need to be revised to address both issues.

   Motion: Mr. Cales – Revise IDM Ch. 52 to Address Alternate Bids and adopt MEPDG as soon as possible.
   Second: Mr. Andrewski
   Ayes: 10
   Nays: 0
   FHWA Gave Approval.

4. Mr. Miller advised that the intent of conceptual proposals is to give guidance to a sub-committee, prevent duplication of effort and optimize work time. The intent is not to delay an issue. Mr. Miller further advised that anyone with a question whether an item should be presented as a conceptual item should discuss it with him.

FINAL DRAFT MINUTES

5. Mr. Miller discussed the Asphalt Price Adjustment special provision. Changes have been made to change the trigger limit from 5 percent to 10 percent. An “opt out” clause will be built into the bid process to allow Contractors the choice to waive the adjustment on a project. The special provision will not be applied to alternate bid (HMA, PCCP) contracts.

B. CONCEPTUAL PROPOSAL ITEMS

OLD BUSINESS

(No items on this agenda)

NEW BUSINESS

1. 111-Stockpiled Materials 5

ACTION: The Committee recommended that 100 Specification Sub-committee begin work to revise 111 to simplify language and identify what materials should be considered for payment under this specification.

2. 207-Lime Subgrade Treatment 7

ACTION: The Committee directed Tom Harris to move forward with the development of this concept. In addition to Nayyar Siddiki (Geotech) and Kumar Dave (Pavement Design), the Committee suggested John Wright (Roadway Services) be involved as well as Industry and FHWA representatives.

3. 506-Tie Bars in Patches 8

ACTION: The Committee directed Mr. Carrow and the 500 Specification Sub-committee along with Pankaj Patel (Pavement Design) to pursue this issue.

4. 700-Elastomeric Bearing Devices 9

ACTION: The Committee advised the 700 Specification Sub-committee along with Ken Anderson (Materials Management) to develop this concept with the objectives to standardize types of elastomeric bearing devices used and to develop reliable test methods.

5. 801-Sign Post Reflectors 10

ACTION: The Committee assigned Joe Novak and the 801 Specification Sub-committee to develop this concept with the following guidance:

(a) Have Mike Holowaty, Safety Program Manager, review and comment.
(b) Have Mike Bowman, Highway Operations Director, review and comment.
(c) Determine cost benefit and liability before pursuing at length.

FINAL DRAFT MINUTES

6. 802-Sign Identification Marking 15

ACTION: Because this item involves a simple change to 802.01, the Committee determined that there is no need for an in-depth study and directed Mr. Garg to prepare the revision for a future Standards Committee agenda.

C. RECURRING SPECIAL PROVISIONS PROPOSED ITEMS

Item 08-13-1	Mr. Heustis	17
203-R-XXX	LOCATION OF PROJECT BORROW SITES	
Action:	Withdrawn	
Item 08-13-2	Mr. Heustis	18
914-R-555	CERTIFICATION OF SOD	
Action:	Passed as submitted	

D. STANDARD SPECIFICATIONS AND STANDARD DRAWINGS PROPOSED ITEMS

OLD BUSINESS

(No items on this agenda)

NEW BUSINESS

Item 08-13-3	Mr. Kuchler	20
105.01	Authority of the Engineer	
Action:	Passed as revised	
Item 08-13-4	Mr. Heustis	22
107.08(d)	Notice to Local Public Officials	
Action:	Withdrawn	
Item 08-13-5	Ms. Rearick	24
Standard Drawing	807-LTFD-09	
Action:	Passed as submitted	
Item 08-13-6	Ms. Rearick	26
920.01(b)7	External Drive System	
Action:	Withdrawn	
Item 08-13-7	Ms. Rearick	27
920.01*(i)*	*Junction Box*	
Action:	Passed as revised	

FINAL DRAFT MINUTES

cc: Committee Members (11)
FHWA (1)

Mr. Heustis
Date: 9/18/08

CONCEPTUAL PROPOSAL ITEM

1. STOCKPILED MATERIALS

CONCEPTUAL
PROPOSAL TO STANDARDS COMMITTEE

PROBLEM(S) ENCOUNTERED: Existing specification contains confusing and conflicting language. INDOT needs to review and consider what materials this specification should apply to.

PROPOSED SOLUTION: Revise specification to simplify language and remove any confusing or conflicting language. Consider addition or deletion of materials paid to be stockpiled. Refer to recent Construction Memorandum 08-11 for more details.

APPLICABLE STANDARD SPECIFICATIONS: Section 111

APPLICABLE STANDARD DRAWINGS: N/A

APPLICABLE DESIGN MANUAL SECTION: N/A

APPLICABLE SECTION OF GIFE: New GIFE 111, existing GIFE 2-14.

APPLICABLE RECURRING SPECIAL PROVISIONS: 111-C-178, 620-R-483, 731-R-202, 732-R-210

Submitted By: Michael A. Milligan (thru Ron Heustis)

Title: Specifications Engineer

Organization: Office of Construction Technical Support
Division of Construction Management

Phone Number: 317-232-5353

Date: 8-13-2008

APPLICABLE SUB-COMMITTEE ENDORSEMENT? 100 Specification Subcommittee

Dennis Kuchler, Co-Chair	State Construction Engineer INDOT, Const. Mgmt.
Steve Thieroff, Co-Chair	INDOT, Field Engr., Div. of Const. Mgmt.
Paul Berebitsky	Indiana Construction Association
Bob Cales	INDOT, Director, Contract Administration
Tony DeSimone	FHWA, Transportation Engineer
Ron Heustis	INDOT, Mgr., Const. Tech. Support, Const. Mgmt.
Von Luhmann	INDOT, Seymour Dist. Const. Project Engineer
Mike Milligan	INDOT, Spec. Engr., Div. of Const. Mgmt.
Jack Riggs	INDOT, Claims Administrator Attorney
Don Thornton	INDOT, Crawfordsville Dist. Const. Area Engr.
David Unkefer	FHWA, Engineering Services Team Leader

FINAL DRAFT MINUTES

INDIANA DEPARTMENT OF TRANSPORTATION

Driving Indiana's Economic Growth

Memorandum

August 14, 2008

CONSTRUCTION MEMORANDUM
08-11

TO: District Deputy Commissioners
District Construction Engineers
District Testing Engineers
District Area Engineers
Project Engineers/Supervisors

FROM: Mark A. Miller, Director
Division of Construction Management

SUBJECT: Payment for Stockpiled Materials (Specification Section 111)

The Department has recently received requests from contractors for payment of stockpiled materials on certain projects for materials that have not been paid for in the past or allowed by our current Specification Section 111. These requests cover a wide range of products. INDOT understands that with today's shortages on certain raw materials or with new items such as sound barrier walls, which currently are not listed as a material that can be stockpiled and paid for under Specification 111, we need to be more receptive to these requests.

Keeping the above thoughts in mind, we will be revising Specification Section 111. Until that happens, we will consider payment for stockpiled materials for items not currently addressed in our specifications. The requests will be reviewed and approved on a case by case basis. In order for a product/material to be approved it must still meet the requirements stated in Specification 111.09 and be delivered and stored in an approved facility or location in the vicinity of the project. Please consult with your Construction Management field engineer for assistance in addressing these requests.

MAM:DAK:dak

Mr. Heustis
Date: 9/18/08

CONCEPTUAL PROPOSAL ITEM

2. LIME SUBGRADE TREATMENT

CONCEPTUAL
PROPOSAL TO STANDARDS COMMITTEE

PROBLEM(S) ENCOUNTERED: As a result of SAC 3007 - Post Construction Evaluation of Lime and Cement Modified Soils, the Geotech Section has determined that the CBR factor is permanently raised when chemical stabilization is used. Our current specification for subgrade treatment does not have a type that only allows chemical stabilization. Using a higher CBR value when designing the pavement section will result in a reduction in the overall pavement thickness and the quantity of HMA required.

PROPOSED SOLUTION: Add a Subgrade Treatment Type to Section 207.04 that allows only Chemical Modification to be used.

APPLICABLE STANDARD SPECIFICATIONS: Section 207

APPLICABLE STANDARD DRAWINGS: None

APPLICABLE DESIGN MANUAL SECTION: None

APPLICABLE SECTION OF GIFE: No effect on the GIFE

APPLICABLE RECURRING SPECIAL PROVISIONS: None

Submitted By: Tom Harris (thru Ron Heustis)

Title: Field Engineer, Division of Comstruction Management

Organization: INDOT

Phone Number: 317-232-4910

Date: August 13, 2008

APPLICABLE SUB-COMMITTEE ENDORSEMENT?

Suggested Members:
Tom Harris, Field Engineer
Nayarr Zia Siddiki, Geotech
Kumar Dave, Pavement Design

FINAL DRAFT MINUTES

Mr. Heustis
Date: 9/18/08

CONCEPTUAL PROPOSAL ITEM

3. TIE BARS IN PATCHES

CONCEPTUAL
PROPOSAL TO STANDARDS COMMITTEE

PROBLEM(S) ENCOUNTERED: Mike Koch (Area Engineer, Fort Wayne) called Tom Carrow (co-chairman, "500" subcommittee for concrete pavements) with a question regarding how large a full-depth concrete patch must be before retrofitted tie bars are necessary. There is presently no guidance on this subject in the SS, the Standard Drawings, or the RSP's. It was suggested by Mr. Koch that 10' be used as a maximum length of a PCCP patch before the tie bars are specified. Tom Carrow concurs. Without a standardization of this maximum length, field personnel are left to guess where tie bars are necessary, as their locations are not typically spelled out in contract plans for patching contracts. Standard Drawing 503-CCPJ-08 already details size and spacing necessary for continuous applications (mainline and shoulder pavement); and Drawing 506-CCPP-01 gives many details specific to PCCP patching, but neither address this issue.

PROPOSED SOLUTION: It is Tom Carrow's recommendation to add a note to the "NOTES" section of Standard Drawing 506-CCPP-01 to state: "Patches 10' or greater in length (in the longitudinal direction of the pavement being patched) shall receive retrofitted tie bars in accordance with Standard Dwg. 503-CCPJ-08.

APPLICABLE STANDARD SPECIFICATIONS: 506

APPLICABLE STANDARD DRAWINGS: Shown above

APPLICABLE DESIGN MANUAL SECTION:

APPLICABLE SECTION OF GIFE:

APPLICABLE RECURRING SPECIAL PROVISIONS: None

Submitted By: Tom Carrow (thru Ron Heustis)

Title: Co-chairman, "500" subcommittee on Rigid Pavements

Organization: INDOT Construction Management

Phone Number: 317-232-5085

Date: August 7, 2008

APPLICABLE SUB-COMMITTEE ENDORSEMENT? 500

FINAL DRAFT MINUTES

Ms. Rearick
Date: 9/18/08

CONCEPTUAL PROPOSAL ITEM

4. ELASTOMERIC BEARING DEVICES

PROPOSAL TO STANDARDS COMMITTEE

PROBLEM(S) ENCOUNTERED: Elastomeric bearing devices are currently standardized only for prestressed-concrete I beams and box beams. There are no standardized devices for prestressed-concrete bulb-tee beams or structural-steel members. These must be independently designed and fabricated each time for each such structure.

PROPOSED SOLUTION: Develop elastomeric-bearing-devices standard details for bulb-tee and structural-steel members. Also, make the currently standardized devices complement those to be newly standardized. Develop a dedicated Standard Specifications section to construction requirements for this work. Revise the Standard Specifications' materials requirements as required for this work. Develop a design policy for this work.

APPLICABLE STANDARD SPECIFICATIONS: 702.03, 711.02, 711.73, Proposed 726, 915.04

APPLICABLE STANDARD DRAWINGS: Existing 707-BEBP-01, -02. -03 become 726-BEBP-01, -02, -03; add proposed 726-BEBP-04, -05, and proposed 726-BEBA-01, -02

APPLICABLE DESIGN MANUAL SECTION: Part 6, Sec. 67-4.03 and 67-4.04

APPLICABLE SECTION OF GIFE:

Submitted By: Anne Rearick

Title: Manager, Office of Structural Services

Organization: INDOT

Phone Number: 2-5152

Date: 8-22-08

FINAL DRAFT MINUTES

Mr. Wright
Date: 9/18/08

CONCEPTUAL PROPOSAL ITEM

5. SIGN POST REFLECTORS

CONCEPTUAL
PROPOSAL TO STANDARDS COMMITTEE

PROBLEM(S) ENCOUNTERED: Enhance the visibility of important Regulatory signs and Warning Signs by using SIGN POST REFLECTORS. Signs such as STOP signs, STOP AHEAD signs, YIELD signs, YIELD AHEAD signs, WRONG WAY signs, CHEVRONS and CURVE signs can be greatly enhanced by additional illumination.

PROPOSED SOLUTION: Require the use of SIGN POST REFLECTORS. Sign post reflectors are used both in Ohio and Michigan. It is recommended that a standard sheet be developed and the design manual be revised to give guidance on how and when this is to be done.

APPLICABLE STANDARD SPECIFICATIONS: Section 801, 919

APPLICABLE STANDARD DRAWINGS: 801-TCDV-08, 801-TCSN-12, 12A, 13, 802-SNGS-09

APPLICABLE DESIGN MANUAL SECTION: Chapter 75

APPLICABLE SECTION OF GIFE: N/A

Submitted By: John Wright

Title: Roadway Services Manager

Organization: Office of Production Management, INDOT

Phone Number: 232-5147

Date: 8/21/08

FINAL DRAFT MINUTES

TC-41.30	OFFICE OF TRAFFIC ENGINEERING	SIGN POST REFLECTORS	01-19-07

NOTES

1. Fabricate sign post reflectors out of 0.080 inch (2.0 mm) thick flat sheet aluminum. Drill or punch 3/8 inch (10 mm) diameter bolt holes, to a tolerance between holes of ± 1/32 inch (0.8 mm). Apply reflective sheeting to the surface of the aluminum.
2. Reflectorize the sign post from within 1 inch (25 mm) of the bottom of the sign post to 24 inches (600 mm) above the edge of pavement or lower, using any combination of the standard lengths shown (see Table). Where this cannot be achieved due to the local ground profile, reflectorize the post to within 12 inches (300 mm) of the ground.
3. When using multiple sections of sign post reflector to achieve the required length of reflectorization, do not leave gaps between sections. The sign post reflectorization should appear as a continous strip.
4. Do not allow the sign post reflector to overlap the sign.
5. For multiple post installations, install the same length sign post reflector on each post.
6. For back-to-back installations of signs requiring sign post reflectorization, install sign post reflectors on both sides of the posts.
7. Install sign post reflectors matching the background color of the sign except that the color of the reflectors for the YIELD and DO NOT ENTER signs shall be red.

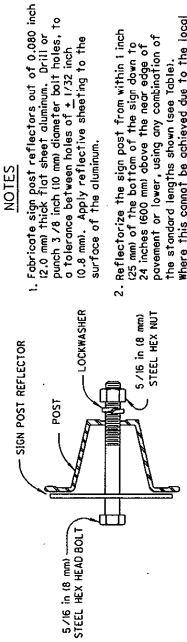

U - CHANNEL
ATTACHMENT DETAIL

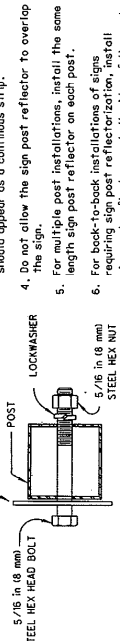

SQUARE POST
ATTACHMENT DETAIL

Actual Sign Mounting Height*	Minimum Length Sign Post Reflectorization
Up to 6 feet	4 feet
Over 6 feet to 7 feet	5 feet
Over 7 feet up to 8 feet	6 feet
Over 8 feet up to 9 feet	7 feet
Over 9 feet up to 10 feet	8 feet
Over 10 feet	See note 3

*Not the minimum allowable sign mounting height

Actual Sign Mounting Height*	Minimum Length Sign Post Reflectorization
Up to 1.8 m	1.2 m
Over 1.8 m to 2.1 m	1.5 m
Over 2.1 m up to 2.4 m	1.8 m
Over 2.4 m up to 2.7 m	2.1 m
Over 2.7 m up to 3.0 m	2.4 m
Over 3.0 m	See note 3

*Not the minimum allowable sign mounting height

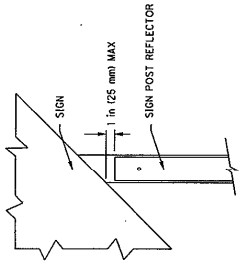

DETAIL A

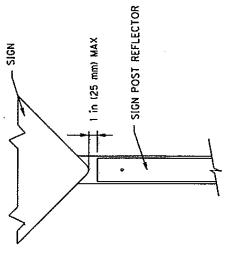

DETAIL B

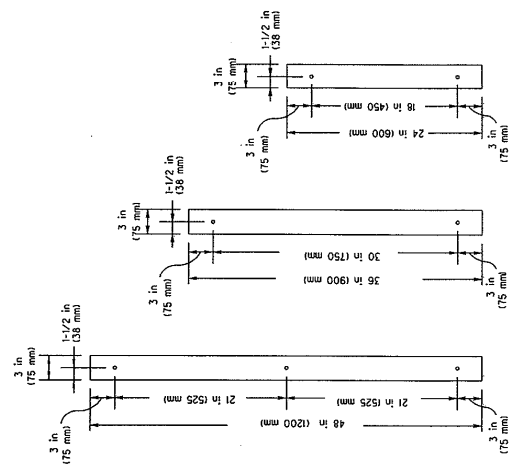

SIGN POST REFLECTORS - FRONT VIEW

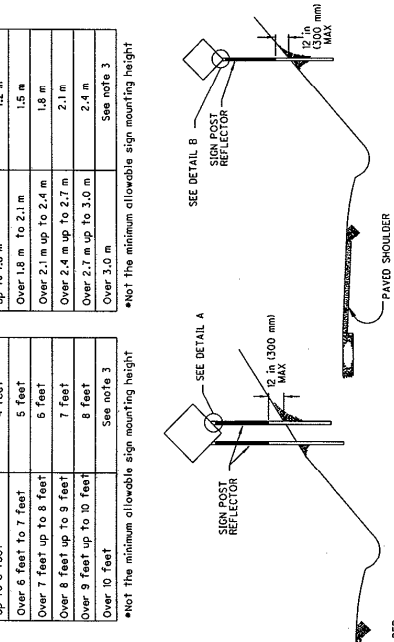

INSTALLATION DETAILS FOR CUT SECTION (SEE NOTE 3)

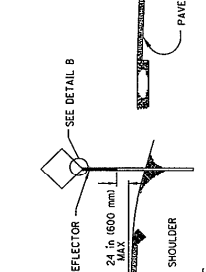

TYPICAL INSTALLATION DETAILS

FIN

FIN

FINAL

Mr. Rust
Date: 9/18/08

CONCEPTUAL PROPOSAL ITEM

6. SIGN IDENTIFICATION MARKING

CONCEPTUAL
PROPOSAL TO STANDARDS COMMITTEE

PROBLEM(S) ENCOUNTERED:
Standard Drawing for Sign Identification Marking (802-SNGS-11) states that sheet for this should be reflectorized white background with black letters. Our Spec. 802.01 states that-"All sign shall be marked for Identification as shown on plans. The marking shall consist of a type II sheeting material, with a class I adhesive, shown on the Department's List of approved Sign sheeting Materials". Our approved material list does not have white color in Type II sheet. Also, Type II reflective sheet has less life than Sign face.

PROPOSED SOLUTION: In order to keep the life of the reflective sheet of Identification marking same as of Sign face, I propose a change in our Spec. 802.01 to use reflective sheet type III or more in place of type II.

APPLICABLE STANDARD SPECIFICATIONS: 802.01

APPLICABLE STANDARD DRAWINGS: 802-SNGS-11

APPLICABLE DESIGN MANUAL SECTION:

APPLICABLE SECTION OF GIFE:

APPLICABLE RECURRING SPECIAL PROVISIONS:

Submitted By: Larry Rust

Title: Supervisor, Traffic Control Section
Highway Operations Division

Organization: INDOT

Phone Number: 317-232-5549

Date: 8.13.2008

APPLICABLE SUB-COMMITTEE ENDORSEMENT? This is considered a minor change not needing subcommittee action.

FINAL DRAFT MINUTES

PROPOSAL TO STANDARDS COMMITTEE

PROBLEM(S) ENCOUNTERED: INDOT has had past problems with borrow pits placed in direct conflict with future roadway alignments.

PROPOSED SOLUTION: Create a Contract Specific (fill in the blank) Recurring Special Provision to require that planned borrow sites be located outside of right-of-way limits.

APPLICABLE STANDARD SPECIFICATIONS: Section 203

APPLICABLE STANDARD DRAWINGS: N/A

APPLICABLE DESIGN MANUAL SECTION: N/A

APPLICABLE SECTION OF GIFE: New GIFE 203

APPLICABLE RECURRING SPECIAL PROVISIONS:

Submitted By: Michael A. Milligan (thru Ron Heustis)

Title: Specifications Engineer

Organization: Office of Construction Technical Support
Division of Construction Management

Phone Number: 317 232 5353

Date: 8-21-2008

APPLICABLE SUB-COMMITTEE ENDORSEMENT? 100 Specification Subcommittee

Dennis Kuchler, Co-Chair	State Construction Engineer INDOT, Const. Mgmt.
Steve Thieroff, Co-Chair	INDOT, Field Engr., Div. of Const. Mgmt.
Paul Berebitsky	Indiana Construction Association
Bob Cales	INDOT, Director, Contract Administration
Tony DeSimone	FHWA, Transportation Engineer
Ron Heustis	INDOT, Mgr., Const. Tech. Support, Const. Mgmt.
Von Luhmann	INDOT, Seymour Dist. Const. Project Engineer
Mike Milligan	INDOT, Spec. Engr., Div. of Const. Mgmt.
Jack Riggs	INDOT, Claims Administrator Attorney
Don Thornton	INDOT, Crawfordsville Dist. Const. Area Engr.
David Unkefer	FHWA, Engineering Services Team Leader

FINAL DRAFT MINUTES

Item No. 08-13-1
Mr. Heustis
Date: 9/18/08

NEW RECURRING SPECIAL PROVISION

203-R-XXX LOCATION OF PROJECT BORROW SITES

(Adopted 09-18-08)

The borrow pit location(s) shall be located outside the planned right-of-way of the _____ project and will be approved by the Engineer. The alignment and planned right-of-way limits for the _____ project are as shown in the contract documents.

FINAL DRAFT MINUTES

Other sections containing specific cross references:

None

General Instructions to Field Employees
Update Required? Y___ N___
By - Addition or Revision
Frequency Manual
Update Required? Y___ N___
By – Addition or Revision

Recurring Special Provisions potentially affected:

See Above

Standard Sheets potentially affected:

None

Motion: M
Second: M
Ayes:
Nays:

Action: Withdrawn

Item No. 08-13-2
Mr. Heustis
Date: 9/18/08

NEW RECURRING SPECIAL PROVISION

12-01-08

914-R-555 CERTIFICATION OF SOD

(A 08-27-08)

The Standard Specifications are revised as follows:

SECTION 914, BEGIN LINE 283, DELETE AND INSERT AS FOLLOWS:

Nursery sod shall meet applicable requirements as set out above and shall be a variety or blend of Kentucky bluegrass or fescue. It shall comply with nursery inspections and plant quarantine regulations of the states of origin and destination as well as with Federal regulations governing interstate movement of nursery stock. ~~A valid copy of the certification of nursery inspection shall accompany each shipment~~ *Material furnished under this specification shall be covered by a type C certification in accordance with 916.*

Other sections containing specific cross references:

None

Recurring Special Provisions potentially affected:

See Above

Motion: Mr. Heustis
Second: Mr. Keefer
Ayes: 10
Nays: 0

General Instructions to Field Employees
Update Required? No
By - Addition or Revision
Frequency Manual
Update Required? Yes
By Revision

Standard Sheets potentially affected:

None

Action: Passed as submitted

_x_ RSP Effective: December 2008 Letting
RSP Sunset Date: _____
___ RPD Effective: _____ Letting
_x_ 2010 Standard Specifications Book
___ 20__ Standards Edition
___ 20__ Design Manual
___ Technical Advisory

Received FHWA Approval? Yes

FINAL DRAFT MINUTES

PROPOSAL TO STANDARDS COMMITTEE

PROBLEM(S) ENCOUNTERED: Both sections 104.02b and 105.01 address suspension of work by the Engineer but are in conflict concerning the Contractor's ability to request additional compensation for work suspended by order of the Engineer.

PROPOSED SOLUTION: Revise 105.01 to avoid conflict with 104.02b.

APPLICABLE STANDARD SPECIFICATIONS: Sections 104.02b and 105.01.

APPLICABLE STANDARD DRAWINGS: N/A

APPLICABLE DESIGN MANUAL SECTION: N/A

APPLICABLE SECTION OF GIFE: New GIFE 105

APPLICABLE RECURRING SPECIAL PROVISIONS: None

Submitted By: Michael A. Milligan (thru Dennis Kuchler)

Title: Specifications Engineer

Organization: Division of Construction Management

Phone Number: 317-232-5353

Date: 8-21-2008

APPLICABLE SUB-COMMITTEE ENDORSEMENT? 100 Specification Subcommittee

Dennis Kuchler, Co-Chair	State Construction Engineer INDOT, Const. Mgmt.
Steve Thieroff, Co-Chair	INDOT, Field Engr., Div. of Const. Mgmt.
Paul Berebitsky	Indiana Construction Association
Bob Cales	INDOT, Director, Contract Administration
Tony DeSimone	FHWA, Transportation Engineer
Ron Heustis	INDOT, Mgr., Const. Tech. Support, Const. Mgmt.
Von Luhmann	INDOT, Seymour Dist. Const. Project Engineer
Mike Milligan	INDOT, Spec. Engr., Div. of Const. Mgmt.
Jack Riggs	INDOT, Claims Administrator Attorney
Don Thornton	INDOT, Crawfordsville Dist. Const. Area Engr.
David Unkefer	FHWA, Engineering Services Team Leader

FINAL DRAFT MINUTES

Item No. 08-13-3
Mr. Kuchler
Date: 9/18/08

REVISION TO 2008 STANDARD SPECIFICATIONS

SECTION 105, BEGIN LINE 10, DELETE AND INSERT AS FOLLOWS:

The Engineer will have the authority to suspend the work wholly or in part for failure to carry out provisions of the contract; for failure to carry out orders; for such periods as may be deemed necessary due to unsuitable weather; for conditions considered unsuitable for prosecution of the work; or for any other condition or reason deemed to be in the public interest. ~~In the case of such a~~ ~~*Any*~~ *Any* ~~*C*~~*contract adjustments for* suspension ~~no additional payment will be made.~~ *of work will be in accordance with 104.02(b).* Work shall not be suspended without written authority from the Engineer.

FINAL DRAFT MINUTES

Other sections containing specific cross references:

None

Recurring Special Provisions potentially affected:

None

Motion: Mr. Kuchler
Second: Mr. Heustis
Ayes: 10
Nays: 0

General Instructions to Field Employees
Update Required? No

Frequency Manual
Update Required? No

Standard Sheets potentially affected:

None

Action: Passed as revised

___ RSP Effective: _____ Letting
RSP Sunset Date: _____
___ RPD Effective: _____ Letting
_x_ 2010 Standard Specifications Book
___ 20__ Standards Edition
___ Technical Advisory

Received FHWA Approval? Yes

PROPOSAL TO STANDARDS COMMITTEE

PROBLEM(S) ENCOUNTERED: The specifications do not currently have language to specifically address maintenance and repair of local roads on haul routes used by contractors on INDOT projects.

PROPOSED SOLUTION: Revise 107.08 to require that the contract bidders contact local government agencies in writing where haul roads are contemplated. Also revise 107.08 to state that these routes shall be maintained and repaired as necessary to preserve the pre-existing quality of the road(s) used as haul routes.

APPLICABLE STANDARD SPECIFICATIONS: Section 107.08

APPLICABLE STANDARD DRAWINGS: N/A

APPLICABLE DESIGN MANUAL SECTION: N/A

APPLICABLE SECTION OF GIFE: New GIFE 107, existing GIFE 3-13.

APPLICABLE RECURRING SPECIAL PROVISIONS: N/A

Submitted By: Michael A. Milligan (thru Ron Heustis)

Title: Specifications Engineer

Organization: Office of Construction Technical Support
Division of Construction Management

Phone Number: 317 232 5353

Date: 8-21-2008

APPLICABLE SUB-COMMITTEE ENDORSEMENT? 100 Specification Subcommittee

Dennis Kuchler, Co-Chair	State Construction Engineer INDOT, Const. Mgmt.
Steve Thieroff, Co-Chair	INDOT, Field Engr., Div. of Const. Mgmt.
Paul Berebitsky	Indiana Construction Association
Bob Cales	INDOT, Director, Contract Administration
Tony DeSimone	FHWA, Transportation Engineer
Ron Heustis	INDOT, Mgr., Const. Tech. Support, Const. Mgmt.
Von Luhmann	INDOT, Seymour Dist. Const. Project Engineer
Mike Milligan	INDOT, Spec. Engr., Div. of Const. Mgmt.
Jack Riggs	INDOT, Claims Administrator Attorney
Don Thornton	INDOT, Crawfordsville Dist. Const. Area Engr.
David Unkefer	FHWA, Engineering Services Team Leader

FINAL DRAFT MINUTES

Item No. 08-13-4
Mr. Heustis
Date: 9/18/08

REVISION TO 2008 STANDARD SPECIFICATIONS

SECTION 107, BEGIN LINE 289, INSERT AS FOLLOWS:

The local governmental agencies for each jurisdiction in the State have the legal authority to establish load limits on their roads. Prior to submitting a bid, each bidder shall contact the local governmental agency in which the use of roads is contemplated and confirm allowable routing of bidder's equipment. *These roads shall be designated as haul routes for the project. The designation shall be made in writing to the local government agencies responsible for the care of such roads. The Engineer shall be provided a copy of this documentation at least 7 days prior to the use of the haul routes. These routes shall be maintained and repaired as necessary to stay in a condition equal to that prior to hauling.*

FINAL DRAFT MINUTES

Other sections containing specific cross references:

106.05 page 60
107.07 page 66
801.03 page 605
801.04 page 607
801.06 page 621
805.03 page 645

Recurring Special Provisions potentially affected:

None

Motion: M
Second: M
Ayes:
Nays:

General Instructions to Field Employees
Update Required? Y___ N___
By - Addition or Revision
Frequency Manual
Update Required? Y___ N___
By – Addition or Revision

Standard Sheets potentially affected:

None

Action: Withdrawn

PROPOSAL TO STANDARDS COMMITTEE

PROBLEM(S) ENCOUNTERED: Removal of material specification note (Note 2) from standard drawing 807-LTFD-09.

PROPOSED SOLUTION: Insert material specification from standard drawing into 920.01(g). Renumber existing 920.01(g) Shop Drawings to 920.01(h) Shop Drawings.

APPLICABLE STANDARD SPECIFICATIONS: 920.01

APPLICABLE STANDARD DRAWINGS: 807-LTFD-09

APPLICABLE DESIGN MANUAL SECTION: None

APPLICABLE SECTION OF GIFE: None

APPLICABLE RECURRING SPECIAL PROVISIONS: None

Submitted By: Anne Rearick

Title: Manager, Office of Structural Services

Organization: INDOT

Phone Number: 317-232-5152

Date: August 22, 2008

APPLICABLE SUB-COMMITTEE ENDORSEMENT?

FINAL DRAFT MINUTES

Item No. 08-13-5
Ms. Rearick
Date: 9/18/08

REVISION TO STANDARD DRAWING

807-LTFD-09, CONVENTIONAL LIGHT FOUNDATION FOR 33″ CONCRETE MEDIAL WALL INSTALLATION

FINAL DRAFT MINUTES

Other sections containing specific cross references:

None

Recurring Special Provisions potentially affected:

None

Motion: Ms. Rearick
Second: Mr. Kuchler
Ayes: 10
Nays: 0

General Instructions to Field Employees
Update Required? No

Frequency Manual
Update Required? No

Standard Sheets potentially affected:

SEE ABOVE

Action: Passed as submitted

___ RSP Effective: _____ Letting
RSP Sunset Date: _____
___ RPD Effective: _____ Letting
___ 20__ Standard Specifications Book
_x_ 20__ Standards Edition
___ Technical Advisory

Received FHWA Approval? Yes

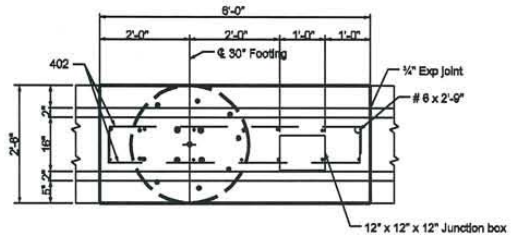

PLAN

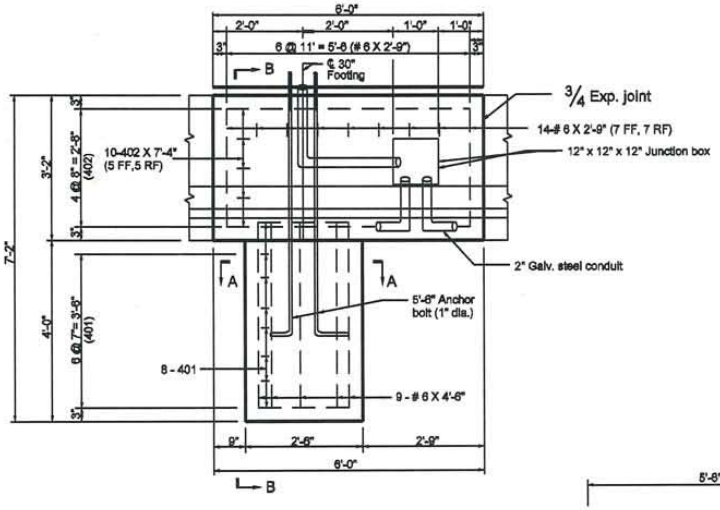

ELEVATION

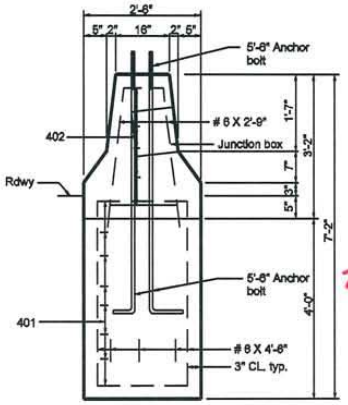

SECTION B-B

Notes: The

1. 2" galvanized steel conduit and junction box can be installed in the median shoulder, the juncton box must be in front of the light foundation.
2. ~~Junction box shall meet the following specifications:~~
   a. ~~Material: Polymer concrete~~
   b. ~~Color: Concrete gray~~
   c. ~~Cover rating: 20,000 lbs.~~
2. 3. Field cut ~~rebar~~ reinforcing bars to accomodate juncton box

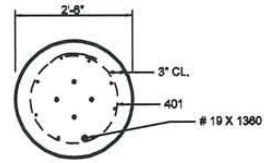

SECTION A-A

401 X 7'-9"

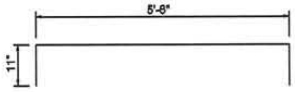

402 X 7'-4"

INDIANA DEPARTMENT OF TRANSPORTATION

CONVENTIONAL LIGHT FOUNDATION FOR 33" CONCRETE MEDIAN WALL INSTALLATION.

SEPTEMBER 2002

STANDARD DRAWING NO. E 807-LTFD-09

RICHARD L. VANCLEAVE REGISTERED No. 9750 STATE OF INDIANA PROFESSIONAL ENGINEER DESIGN STANDARDS ENGINEER

/s/ Richard L VanCleave — DESIGN STANDARDS ENGINEER — 9-03-02 DATE

/s/ Richard K. Snutzer — CHIEF HIGHWAY ENGINEER — 9-03-02 DATE

Item No. 08-13-6
Ms. Rearick
Date: 9/18/08

REVISION TO 2008 STANDARD SPECIFICATIONS

SECTION 920, BEGIN LINE 360, DELETE AND INSERT AS FOLLOWS:

The external drive system shall be capable of operating all high mast pole installations. Shop drawings shall be furnished in accordance with 920.01(g) ~~(h)~~ and shall include the dimensions and the wiring diagram of the standard connections of the external drive system. The external drive system shall be mounted on a two wheel cart with wheels at least 12 in. (300 mm) in diameter and the weight shall be distributed so that it presents a balance load.

FINAL DRAFT MINUTES

COMMENTS:

Since this was changed after the meeting, there is no change to the Standard Specifications. Action for this item has been changed to show as Withdrawn.

Other sections containing specific cross references:

None

General Instructions to Field Employees
Update Required? No

Frequency Manual
Update Required? No

Recurring Special Provisions potentially affected:

None

Standard Sheets potentially affected:

807-LTFD-09

Motion:
Second:
Ayes:
Nays:

Action: Withdrawn

Received FHWA Approval? Yes

Item No. 08-13-7
Ms. Rearick
Date: 9/18/08

REVISION TO 2008 STANDARD SPECIFICATIONS

~~SECTION 920, AFTER LINE 615, DELETE AND INSERT AS FOLLOWS:~~

~~***(g) Junction Box***~~

~~*The junction box shall be polymer concrete, of concrete-gray color, with a cover rating of 20,000 lb (9072 kg).*~~

~~**(g)** ***(h)*** **Shop Drawings**~~

SECTION 920, AFTER LINE 661, INSERT AS FOLLOWS:

(i) Junction Box

The junction box shall be polymer concrete, of concrete-gray color, with a cover rating of 20,000 lb (9072 kg).

FINAL DRAFT MINUTES

Committee Comments:

The Specifications Engineer will determine the proper place to fit in specifications.

Other sections containing specific cross references:

None

Recurring Special Provisions potentially affected:

None

Motion: Ms. Rearick
Second: Mr. Kuchler
Ayes: 10
Nays: 0

General Instructions to Field Employees
Update Required? No

Frequency Manual
Update Required? No

Standard Sheets potentially affected:

807-LTFD-09

Action: Passed as revised

___ RSP Effective: _____ Letting
RSP Sunset Date: _____
___ RPD Effective: _____ Letting
_x_ 2010 Standard Specifications Book
___ 20__ Standards Edition
___ Technical Advisory

Received FHWA Approval? Yes