INDIANA DEPARTMENT OF TRANSPORTATION

STANDARDS COMMITTEE MEETING

Driving Indiana's Economic Growth

APPROVED MINUTES

August 28, 2008

MEMORANDUM

TO: Standards Committee

FROM: Mike Milligan, Secretary

RE: Minutes for the July 17, 2008 Standards Committee Meeting

The Standards Committee meeting was called to order by the Chairman at 9:06 a.m. on July 17, 2008 in the N755 Bay Window Conference Room. The meeting was adjourned at 11:46 a.m.

The following members were in attendance:

Mark Miller, Chairman
Dennis Kuchler, Constr. Mgmt.
Ron Heustis, Constr. Mgmt.
Lalit Garg, Traffic Control[1]
Ron Walker, Materials Mgmt.
Mike Hoy, Crawfordsville Dist.[2]
Dave Andrewski, Pvmt. Engineering
Bob Cales, Contract Admin.
Richard VanCleave, Roadway Services[3]
Tony Uremovich, Structural Services[4]
Jim Keefer, Fort Wayne Dist.

[1]*Proxy for Larry Rust*
[2]*Proxy for Tom Caplinger*
[3]*Proxy for John Wright*
[4]*Proxy for Anne Rearick*

Also in attendance were the following:

Mike Milligan, Secretary
Steve Fisher, INDOT
Todd Shields, INDOT
Greg Smith, Ft. Wayne Dist.
Charlie Kahl, ICA
Elizabeth Dwyre, Parsons Brinckerhoff
Jeff James, INDOT
John Bartolo, INDOT
Yolanda Belew, INDOT
Tom Duncan, FHWA
Paul Berebitsky, ICA

APPROVED MINUTES

A. GENERAL BUSINESS ITEMS

OLD BUSINESS

(No items on this agenda)

NEW BUSINESS

1. Deletion of the existing 802-SNOH drawings for overhead sign trusses and foundations 5

   ACTION: A Recurring Special Provision will be issued that deletes existing standard drawings 802-SNOH-01 thru 16 until such time that new Standard Drawings can be developed and approved. Until new drawings are approved, designers will be required to develop contract specific designs for sign trusses and foundations.

   Motion: Mr. Kuchler
   Second: Mr. Heustis
   Ayes: 10
   Nays: 0
   FHWA concurred.
   Effective Date: Lettings on or after November 1, 2008.

2. Shakeel Baig has requested to be removed from the Standards Committee and has also requested that Tom Caplinger be assigned as his replacement as the District Production representative.

   ACTION: The request was approved by the Committee and Tom Caplinger will be the District Production representative effective July 17, 2008.

B. CONCEPTUAL PROPOSAL ITEMS

OLD BUSINESS

(No items on this agenda)

NEW BUSINESS

1. Curb and Gutter at Drives 6

   ACTION: The Committee requested that Tom Carrow be asked to organize a small task group, no more than 6 individuals, to study the situation and recommend solutions. Requested that group also look at curbs placed in conjunction with ADA ramps. Recommended representation from industry, Pavement Design and District Design.

2. Section 716 – Trenchless Pipe Installation 8

   ACTION: The Committee noted that most of the issues were related to design guidance and requested that the Trenchless Pipe task group coordinate design manual issues with Tony Uremovich, Structural Services. Any specifications that need to be addressed as part of the work should also be identified and proposed to the Standards Committee for

APPROVED MINUTES

action. The group has asked to include a District Construction representative in their discussions. The Standards Committee advised the Trenchless Pipe task group that the cut-off date for approval of items to be included in the 2010 Specification Book is the November 20, 2008 Standard Specifications Meeting.

3. Asphalt Binder Price Adjustment 10

ACTION: The Committee approved the use of a price adjustment index for PG asphalt binder by issuance of a Recurring Special Provision.

Motion: Mr. Heustis
Second: Mr. Cales
Ayes: 10
Nays: 0
FHWA concurred.
Effective Date: Lettings on or after September 1, 2008.

Mr. Andrewski suggested adding 304, 718 and other miscellaneous items. The Committee discussed that the PE/S would make monthly adjustments on included HMA items. Mr. Cales suggested that the specification was a better fit for section 109.05 along with other adjustments. Mr. Keefer noted that the spec will require additional work from field personnel who are already stretched thin. Mr. Heustis noted that other revisions may be needed to place the spec in the proper section and define the pay item.

NOTE: Since the meeting, the special provision as presented at the meeting has been revised to address the Committee's concerns and to further clarify the language. The final version of RSP 109-C-219 is included in the minutes after the provision as originally submitted.

4. Articulating Block Riprap Systems 15

ACTION: Mr. Milligan was requested to develop a RSP for Section 616 by August 15, 2008 that will allow for the use of articulated block systems as an alternate to hand laid riprap. An ad hoc task group will study other uses and report to the Standards Committee by October 1, 2008.

5. Separation Between Sewers and Water Mains 16

ACTION: The Standards Committee will request Mr. Wright to chair an ad hoc committee to develop design guidance and specifications to address this issue.

APPROVED MINUTES

C. RECURRING SPECIAL PROVISIONS PROPOSED ITEMS

Item 08-11-1	Mr. Andrewski	18
411-R-432	Warranted Micro-Surfacing	
Action:	Passed as revised	

D. STANDARD SPECIFICATIONS AND STANDARD DRAWINGS PROPOSED ITEMS

OLD BUSINESS

(No items on this agenda)

NEW BUSINESS

Item 08-11-2	Mr. Andrewski	36
404	SEAL COAT	
Action:	Passed as revised	

APPROVED MINUTES

cc: Committee Members (11)
FHWA (1)

Ms. Rearick
Date: 7/17/08

GENERAL BUSINESS ITEM

1. DELETION OF THE EXISTING 802-SNOH DRAWINGS FOR OVERHEAD SIGN TRUSSES AND FOUNDATIONS

PROPOSAL TO STANDARDS COMMITTEE

PROBLEM(S) ENCOUNTERED: Sign trusses and foundations shown on Standard Drawings 802-SNOH-01 through -16 are not applicable to the current permissible truss span lengths and signage area that can be mounted on a truss. Also, the current configurations are not in accordance with AASHTO Load Resistance Factor Design.

PROPOSED SOLUTION: Provide instruction to not use, and delete the drawings referenced above. A proposal for new details, along with applicable specifications and design policy, will be presented at a later meeting.

APPLICABLE STANDARD SPECIFICATIONS: Ultimately 802.11, 802.12; possibly 910.19

APPLICABLE STANDARD DRAWINGS: 802-SNOH-01 through -16

APPLICABLE DESIGN MANUAL SECTION: New Section 75-5.06

APPLICABLE SECTION OF GIFE:Unknown

Submitted By: Anne Rearick

Title: Manager, Office of Structural Services

Organization: INDOT

Phone Number: 2-5152

Date: 7-09-08

APPROVED MINUTES

Mr. Heustis
Date: 7/17/08

CONCEPTUAL PROPOSAL ITEM

1. CURB AND GUTTER AT DRIVES

PROPOSAL TO STANDARDS COMMITTEE

PROBLEM(S) ENCOUNTERED: Combined curb & gutter is usually placed with a slipform type paver on most projects. When the curb & gutter is placed across the entrance of a drive, the machine is set to drop the curb down to the 1 ½″ height of the lip required at the drive. Current INDOT Standard Drawing details do not recognize this method and do not clearly define how the curb & gutter should be placed and how it is to be paid for.

PROPOSED SOLUTION: Revise the current Standard Drawings or create new ones to detail how to place combined curb & gutter by slipform method across the entrance of a drive. Review the Standard Specifications for any revisions required.

(See attached Standard Drawing revision proposed by Greg Smith)

APPLICABLE STANDARD SPECIFICATIONS: 605.10, 610.06

APPLICABLE STANDARD DRAWINGS: E 610 DRIV 01 & 03

APPLICABLE DESIGN MANUAL SECTION:

APPLICABLE SECTION OF GIFE:

Submitted By: Gregory J. Smith, P.E. (thru Ron Heustis)

Title: District Review Engineer

Organization: INDOT – Fort Wayne District

Phone Number: 260-399-7322

Date: 05-19-08

Heustis' comments:

This issue has been raised by several PE/S this year. Tom Carrow, Field Engineer in Construction Management, has also expressed interest in reaching a solution for this problem.

Recommend that the Committee assign Tom Carrow to form an ad hoc committee to address this concern and to bring a proposed solution to the Standards Committee for action by the October 2008 Standards Committee meeting. The ad hoc committee should review similar details from other states and any industry standards available. The ad hoc committee members should be approved by the Standards Committee Chair.

APPROVED MINUTES

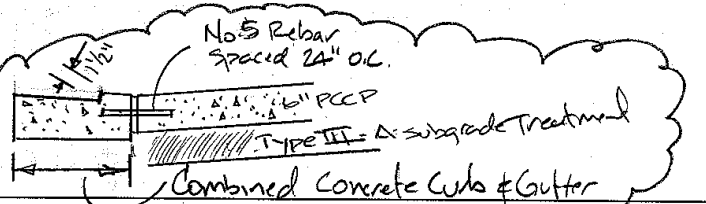

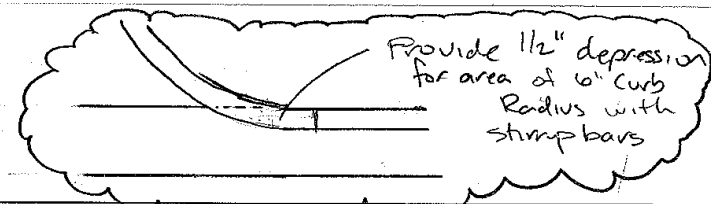

Section A-A

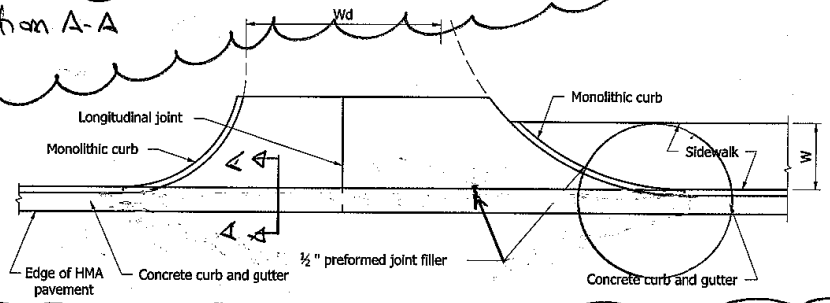

MODIFIED

CONCRETE CURB & GUTTER CONNECTION FOR CLASS I & III DRIVES

(For Use With Slip Form Pavers)

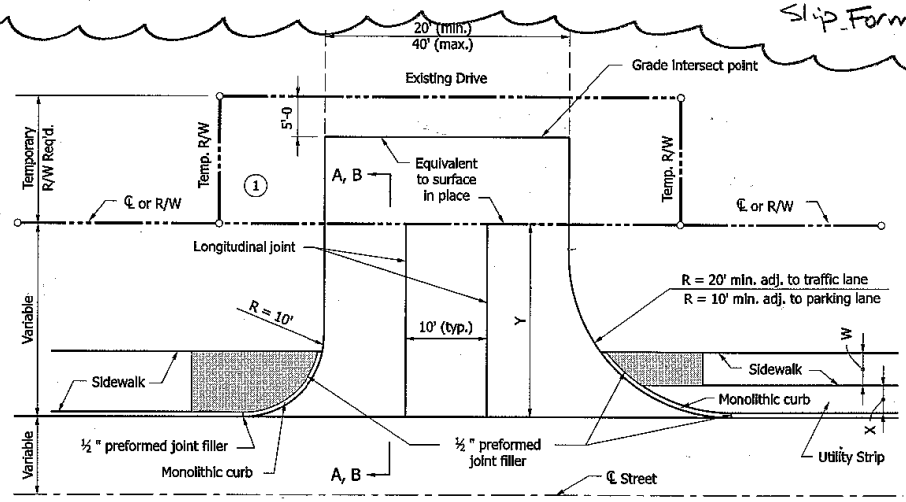

PLAN VIEW - CLASS III DRIVE

NOTES :

1. See Standard Drawing E 610-DRIV-08 for Section A-A, and Section B-B.
2. For Class III drive, 9 in. PCCP pavement for driveways shall be placed on subgrade treatment Type IIIA.
3. See Standard Drawings E 604-SDWK-01 or E 604-SDWK-02 for side walk elevation transition details, or Standard Drawing E 604-SWCR-09 for sidewalk curb ramp details if the drive is signalized.

LEGEND

W = Width of sidewalk
Wd = Driveway width
X = Distance between back face of curb and sidewalk.
Y = Distance from front face of curb to P or R/W
Sidewalk elevation transition.

INDIANA DEPARTMENT OF TRANSPORTATION

CLASS III DRIVE

MODIFIED

SEPTEMBER 2007

STANDARD DRAWING NO. E 610-DRIV-03

RICHARD L. VanCLEAVE REGISTERED No. 9750 STATE OF INDIANA PROFESSIONAL ENGINEER

DESIGN STANDARDS ENGINEER

/s/ Richard L. VanCleave 09/04/07
DESIGN STANDARDS ENGINEER DATE

/s/ Mark A. Miller 09/04/07
CHIEF HIGHWAY ENGINEER DATE

CONCEPTUAL PROPOSAL ITEM

2. SECTION 716 – TRENCHLESS PIPE INSTALLATION

PROPOSAL TO STANDARDS COMMITTEE

PROBLEM(S) ENCOUNTERED: The current specification does not place sufficient restrictions on the application of trenchless pipe installation for higher risk methods or situations. In at least two instances, problems were experienced during construction that resulted in damage to, or the threat of damage to, roadways. The current specification includes a number of provisions which constitute Quality Control Plan, QCP, requirements, but the provisions are not sufficiently detailed and are scattered throughout the specification. Trenchless methods and equipment are evolving, and the current specification does not cover all current/evolving methods in detail. The current specification includes detailed requirements for cellular grout, which are now addressed in Cellular Grout 725.

PROPOSED SOLUTION: Rewrite the specification to make it more detailed and to address specifics of trenchless pipe installation. Limit the applicability of the specification to typical ranges of pipe diameters and depths. Where projects require installations outside the range covered by the specification, a project-specific special provision will be necessary. Include all QCP requirements in a single section, to make it easier for the Contractor to prepare a sufficiently detailed document, and easier for the Engineer to review it. Limit the applicability of the specification to the installation methods most widely used and accepted. In this way, the QCP requirements may be tailored to methods currently widely used. Provide a detailed submittal method for technologies not covered by the specifications. Delete the Cellular Grout description and refer to 725.

APPLICABLE STANDARD SPECIFICATIONS: 716

APPLICABLE STANDARD DRAWINGS: N/A

APPLICABLE DESIGN MANUAL SECTION:

APPLICABLE SECTION OF GIFE: 716 of New GIFE

APPLICABLE RECURRING SPECIAL PROVISIONS: N/A

Submitted By: Mir Zaheer (thru Ron Walker)

Title: Geotechnical Engineer Team Leader

Organization: INDOT Office Of Geotechnical Engineering

Phone Number: 317-610-7251, ext. 224

Date: 6/19/08

APPROVED MINUTES

APPLICABLE SUB-COMMITTEE ENDORSEMENT? Trenchless Pipe Committee (Ad Hoc)Committee membership consists of INDOT, Industry, and Academia. The members are as follows:

Mir Zaheer, INDOT, Office of Geotech. Engr.
Youlanda Belew, INDOT, Office of Geotech. Engr.
Stanley Graves, Veolia Water
Dan Liotti, Midwest Mole, Inc.
Tom Struewing, ATC Associates, Inc.
Erdogan Sener, IUPUI, Const. Engr. Mgmt. Technology
Elizabeth Dwyre, Parsons Brinkerhoff
Mike Milligan, INDOT, Div. of Const. Mgmt.
Dr. Tom Iseley, IUPUI, Const. Engr. Mgmt. Technology

APPROVED MINUTES

Mr. Heustis
Date: 7/17/08

CONCEPTUAL PROPOSAL ITEM

3. ASPHALT BINDER PRICE ADJUSTMENT

PROPOSAL TO STANDARDS COMMITTEE

PROBLEM(S) ENCOUNTERED: Unpredictable price changes in PG binder are causing additional risk to be addressed by contractors during bidding. They often cannot lock in prices and must pass along anticipated risk in their bid prices to cover cost increases.

PROPOSED SOLUTION: A PG binder adjustment provision has been proposed for over a year, but industry could not agree internally on implementation. The proposed provision has now been requested by industry and backed by the Commissioner. The Standards Committee should review the provision and make recommendations and comments prior to implementation.

APPLICABLE STANDARD SPECIFICATIONS: 401, 402, 410, 610

APPLICABLE STANDARD DRAWINGS: None

APPLICABLE DESIGN MANUAL SECTION: None

APPLICABLE SECTION OF GIFE: Will require instructions to be issued by memo.

APPLICABLE RECURRING SPECIAL PROVISIONS: None

Submitted By: Ron Heustis

Title: Construction Tech Support Manager

Organization: INDOT

Phone Number: 317-234-2777

Date: 6/30/08

APPLICABLE SUB-COMMITTEE ENDORSEMENT? Conceived and reviewed by ad hoc committee consisting of Mark Miller, Jeff James and Ron Heustis of INDOT along with Lloyd Bandy and other representatives of APAI.

APPROVED MINUTES

400-R-525 ASPHALT BINDER PRICE ADJUSTMENT

The Standard Specifications are revised as follows:

SECTION 401, AFTER LINE 646 INSERT AS FOLLOWS:

The Department will adjust the compensation for performance graded asphalt binders used in any 401, 402, 410 or 610 hot mix asphalt pay item due to an increase or decrease in the cost of the binder material. Compensation will be adjusted when an increase or decrease in the Department maintained asphalt binder index exceeds five percent ~~by a minimum of one percent~~. Compensation will only be adjusted when the total original or revised quantity of at least one hot mix asphalt pavement contract pay item exceeds 2,000 tons (2,000 Mg).

The Department will determine the asphalt binder index on the first business day of each month by securing prices from the approved list of performance graded asphalt binder retail suppliers. The index will be based on the average of the posted (reference) prices for a liquid ton of PG 64-22 at the source. The asphalt binder index will be maintained by the Office of Materials Management and posted on the Department's website. A price adjustment will be determined monthly for all grades of PG asphalt binder used in hot mix asphalt items placed on the contract during that month. The total PG asphalt binder adjustment (PA) applied to the contract each month will be the sum of the calculations for each hot mix asphalt item. The adjustment for each item will be calculated as follows:

For a price increase: $MPA = (Q \times Pb)/100 \times LI \times [(BI-LI)/LI - 0.050]$

For a price decrease: $MPA = (Q \times Pb)/100 \times LI \times [(BI-LI)/LI + 0.050]$

Where:

MPA = Mixture Price Adjustment, in dollars, for each HMA item, calculated to the nearest 0.01 dollar.

Q = Quantity of HMA mixture placed in tons (megagrams), entered to the actual 0.01 unit placed.

Pb = Percent of virgin asphalt binder from the DMF (in the adjustment period) or JMF for the HMA mixture, entered to the nearest 0.1.

LI = Binder Index established for the contract at the time of letting reported to the nearest whole number.

BI = Binder Index for month mixture is placed, reported to the nearest whole number.

The calculation of (BI-LI)/LI will be rounded to the nearest 0.001. Price adjustments will only be made when the absolute value of (BI-LI)/LI is equal to or greater than 0.~~060~~051.

400-R-525

APPROVED MINUTES

The LI is equal to the BI for the month immediately before the month of the letting. The LI and BI will be reported to the nearest whole dollar.

If hot mix asphalt pavement contract pay items are placed beyond the specified contract completion date, the Department will base price adjustments on the BI for the month containing the specified completion date or the BI for the actual month of placing, whichever is less.

SECTION 401, AFTER LINE 653, INSERT AS FOLLOWS:

PG Asphalt Binder Adjustment .....DOL

SECTION 402, AFTER LINE 370, INSERT AS FOLLOWS:

The Department will adjust the compensation for performance graded asphalt binders used in any hot mix asphalt pavement contract pay item due to an increase or decrease in the cost of the material. Adjustments to the compensation will be computed in accordance with 401.22.

SECTION 410, AFTER LINE 441, INSERT AS FOLLOWS:

The Department will adjust the compensation for performance graded asphalt binders used in any hot mix asphalt pavement contract pay item due to an increase or decrease in the cost of the material. Adjustments to the compensation will be computed in accordance with 401.22.

SECTION 610, AFTER LINE 69, INSERT AS FOLLOWS:

The Department will adjust the compensation for performance graded asphalt binders used in any hot mix asphalt pavement contract pay item due to an increase or decrease in the cost of the material. Adjustments to the compensation will be computed in accordance with 401.22.

APPROVED MINUTES

400-R-525

109-C-219 PG ASPHALT BINDER MATERIAL COST ADJUSTMENTS

(Adopted 07-17-08)

The Standard Specifications are revised as follows:

SECTION 109, AFTER LINE 643, INSERT AS FOLLOWS:

109.05.2 PG Asphalt Binder Material Cost Adjustments

The Department will adjust payment to the Contractor due to an increase or decrease in the cost of PG asphalt binder material used to produce HMA mixtures that are paid in accordance with 304, 401, 402, 410, 610 or 718. Payment will be adjusted when an increase or decrease in the PG asphalt binder index for the contract exceeds five percent. Payment will only be adjusted when the total original or revised quantity of at least one HMA pay item exceeds 2,000 tons (2,000 Mg).

The Department will determine a PG asphalt binder index on the first business day of each month by securing prices from the Department's approved list of PG asphalt binder retail suppliers. The PG asphalt binder index will be the average of the posted prices for a liquid ton of PG 64-22 at the source. The PG asphalt binder index will be maintained by the Office of Materials Management and posted on the Department's website. A monthly payment adjustment will be calculated for each HMA pay item placed on the contract during that month. The total PG asphalt binder adjustment applied to the contract each month will be the sum of the calculations for each HMA pay item. The payment adjustment for each HMA pay item will be calculated as follows:

For a price increase: $MPA = (Q \times Pb)/100 \times LI \times [(BI-LI)/LI - 0.050]$

For a price decrease: $MPA = (Q \times Pb)/100 \times LI \times [(BI-LI)/LI + 0.050]$

where:

MPA = *Mixture Payment Adjustment, in dollars, calculated to the nearest 0.01 dollar for each HMA pay item.*

Q = *Quantity of a HMA pay item placed, in tons (megagrams), entered to the actual 0.01 unit placed. The quantity will be calculated prior to calculation of any other quantity adjustment.*

Pb = *Percent of virgin asphalt binder from the DMF, in the adjustment period, or JMF for the HMA mixture, entered to the nearest 0.1.*

BI = *PG asphalt binder index for the month the HMA pay item is placed, reported to the nearest whole dollar.*

LI = *PG asphalt binder index for the contract. The LI for all original contract HMA pay items equals the BI for the month immediately prior to the month of letting for the contract. The LI for any HMA extra work pay item will be the BI for the month the unit price for the pay item is submitted by the Contractor.*

The calculation of (BI-LI)/LI will be rounded to the nearest 0.001. Payment will only be adjusted when the absolute value of (BI-LI)/LI is equal to or greater than 0. 051.

APPROVED MINUTES

If HMA pay items are placed beyond the specified contract completion date for the contract, the Department will calculate pay adjustments on the BI for the month of the specified completion date or the month of placement, whichever result is less.

The unit price of PG asphalt binder payment adjustment will be one dollar and the pay quantities will be in units of dollars.

Payment will be made under:

Pay Item	***Pay Unit Symbol***
Payment Adjustment, PG Asphalt Binder	*DOL*

APPROVED MINUTES

Mr. Heustis
Date: 7/17/08

CONCEPTUAL PROPOSAL ITEM

4. ARTICULATING BLOCK RIPRAP SYSTEMS

PROPOSAL TO STANDARDS COMMITTEE

PROBLEM(S) ENCOUNTERED: Increased emphasis on erosion control has profoundly affected construction projects. This increased emphasis has led to innovation concerning materials used for temporary and permanent erosion control.

Additionally, correction and prevention of scour of structural foundations has become an important concern.
There is a need for construction solutions that can fit a variety of applications and provide the durability to withstand high energy water flow.

PROPOSED SOLUTION: Revise 616 to include articulating concrete block systems as a flexible and durable alternative to other methods of channel lining and bank protection. Also, provide guidance for use of articulated concrete block systems for protection of structural foundations from scour.

APPLICABLE STANDARD SPECIFICATIONS: 616

APPLICABLE STANDARD DRAWINGS: None

APPLICABLE DESIGN MANUAL SECTION: Chapter 38

APPLICABLE SECTION OF GIFE: New 616

APPLICABLE RECURRING SPECIAL PROVISIONS: None

Submitted By: Michael A. Milligan, P.E. (thru Ron Heustis)

Title: Specifications Engineer

Organization: Office of Construction Technical Support

Phone Number: 317-232-5353

Date: 6/20/08

APPLICABLE SUB-COMMITTEE ENDORSEMENT? Ad Hoc Committee including Merril Dougherty, Structural Services, Malek Smadi, Geotechnical Services, Louis Feagans, Project Management, Mike Milligan, Construction Technical Support, and others to be named later (Materials representative, District construction representative, Environmental representative, and at least one industry representative).

APPROVED MINUTES

Mr. Wright
Date: 7/17/08

CONCEPTUAL PROPOSAL ITEM

5. SEPARATION BETWEEN SEWERS AND WATER MAINS

PROPOSAL TO STANDARDS COMMITTEE

PROBLEM(S) ENCOUNTERED: The Indiana Administrative Code 327 8-3.2-9 concerning Separation of Water Mains from Potential Sources of Contamination or Damage is very specific on maintaining separation from sewers and water potable lines. The Ten States Standards, Part 8 also is specific on the location of water mains to sewers. In the interest of public health and safety we need to accommodate maintaining this separation between sewers and water mains in our design projects. Separation issues can usually be avoided. However, there are occasions when moving existing pipes is not physically or economically feasible. Also, unforeseen conflicts are occasionally discovered during construction.

PROPOSED SOLUTION: Prepare a special provision to ensure that water and sewer line separation issues encountered during construction are dealt with in accordance with regulations.

APPLICABLE STANDARD SPECIFICATIONS:

APPLICABLE STANDARD DRAWINGS:

APPLICABLE DESIGN MANUAL SECTION: Chapter 10

APPLICABLE SECTION OF GIFE:

Submitted By: Gregory J. Smith, P.E. (thru John Wright)

Title: District Review Engineer

Organization: INDOT Fort Wayne District

Phone Number: 260-339-7322

Date: 5/19/08

APPLICABLE SUBCOMMITTEE ENDORSEMENT?

INDOT Pipe Committee reviewed concept at June 12, 2008 meeting and tabled pending presentation of detailed specification at future meeting.

An ad hoc committee is being formed to compose a recurring special provision within the guidelines of current regulations.

APPROVED MINUTES

PROPOSAL TO STANDARDS COMMITTEE

PROBLEM(S) ENCOUNTERED: Revised specification. Current spec was written in 2002 and has not been revised/updated since.

PROPOSED SOLUTION: Revised spec will provide better product by adding an additional pay item, better defining and updating warranty thresholds, updating material requirements, and revising warranty monitoring.

APPLICABLE STANDARD SPECIFICATIONS:

APPLICABLE STANDARD DRAWINGS: N/A

APPLICABLE DESIGN MANUAL SECTION: 52-11.0

APPLICABLE SECTION OF GIFE: Unknown

APPLICABLE RECURRING SPECIAL PROVISIONS: 411-R-432

Submitted By: Dave Andrewski

Title: Manager, Office of Pavement Engineering

Organization: INDOT

Phone Number: 317-232-5452

Date: June 6, 2008

APPLICABLE SUB-COMMITTEE ENDORSEMENT?

This revision was done with a small committee consisting of Todd Shields, Dave Andrewski, Jeff James, Mike Prather, Mike Milligan, and Scott Trammell. Our qualified contractors were invited to comment, and a meeting took place in February between INDOT and Industry (Strawser and Terry Asphalt attended).

Pavement Steering Committee (June 5, 2008 Meeting)- John Weaver, Dave Andrewski, Jeff James, Kumar Dave, Tommy Nantung, John Wright, Athar Khan, Todd Shields, Shakeel Baig, Doug Moser, Dwane Myers, Lee Randell, Jeff Logman, Khalil Dughaish, Tom Duncan, Lloyd Bandy, Mike Byers, Paul Berebitsky, Larry Galehouse

Pavement Preservation Subcommittee (June 5, 2008 Meeting) - Todd Shields, Scott Trammell, Mike Bowman, Bill Tompkins, Doug Moser, Khalil Dughaish, Tommy Nantung, Ju Sang Lee, Kerry Land, Dave Andrewski, Tom Duncan

APPROVED MINUTES

411-R-432 WARRANTED MICRO-SURFACING

(Revised 07-17-08)

The Standard Specifications are revised as follows:

SECTION 411, BEGIN LINE 1, INSERT AS FOLLOWS:

SECTION 411 – WARRANTED MICRO-SURFACING

411.01 Description

This work shall consist of furnishing materials and the construction of warranted micro-surfacing ~~for rut filling and surface leveling applications~~ in accordance with 105.03. Multiple course micro-surfacing shall consist of a surface course over a rut fill or leveling course. Single course micro-surfacing shall consist of a surface course.

The Contractor shall be responsible for the warranted micro-surfacing for a period of three years after the date all warranted micro-surfacing is completed and open to unrestricted traffic.

~~*A Quality Control Plan in accordance with 411.16 shall be prepared and submitted to the Engineer at least 15 days prior to commencing micro-surfacing operations.*~~

MATERIALS

411.02 Materials

Materials shall be in accordance with the following:

*Asphalt Emulsion .....As Defined**
*Coarse Aggregates – Class B or Higher **.....904*
*Fine Aggregates***.....904*
Portland Cement, Type I .....901.01(b)
Water.....913.01

* *Polymer Modified Asphalt Emulsion shall be a quick-set, CSS-1h emulsion in accordance with AASHTO M 208 except the cement-mixing test is waived. The polymer material shall be milled or blended into the ~~emulsion~~ asphalt or blended into the emulsifier solution prior to the emulsification process. The minimum polymer solids content will be 3.0% based on the residual of the emulsion. Mix set additives shall be added as required to provide control of the quick-set properties. Additional requirements shall be in accordance with the following.*

Characteristics	*Test Method*	*Requirement*
Residue (Note 1)	*AASHTO T 59*	*62+*
Softening Point, °F (°C)	*AASHTO T 53*	*140+ (60+)*
Viscosity @140°F (60°C)	*AASHTO T 202*	*8000+*
Elastic Recovery @ 77°F (25°C)	*AASHTO T 301*	*60*
NOTE 1. The temperature for this test shall be held below 180°F (82°C). The sample is oven evaporated on a glass plate at 77°F (25°C) for 24 h (forced draft oven). Material is then scraped from the plate with a razor blade tool.		

** *The coarse aggregate angularity shall be a minimum of 95% in accordance with ASTM D 5821. The coarse aggregate for rut fill~~ing~~ shall be limestone, dolomite, crushed gravel, sandstone, ACBF,*

APPROVED MINUTES

or SF. The surface application aggregate type shall be based on the ESAL category in the Surface Aggregate Table below.

*** *The fine aggregate for micro-surface shall be limestone, dolomite, crushed gravel, sandstone, ACBF, or SF. The fine aggregate angularity shall be a minimum of 45 in accordance with AASHTO T 304 Method A. The clay content of the blended aggregate material from the fine and coarse aggregates shall meet a minimum sand equivalency of ~~50~~ 65 in accordance with AASHTO T 176. The surface leveling application aggregate type shall be based on the ESAL category as follows:*

Surface Aggregate Table			
Coarse or Fine Aggregate Type	*Traffic ESALs*		
	< 3,000,000	*< 10,000,000*	*≥ 10,000,000*
Air-Cooled Blast Furnace Slag	*Yes*	*Yes*	*Yes*
Steel Furnace Slag	*Yes*	*Yes*	*Yes*
Sandstone	*Yes*	*Yes*	*Yes*
Crushed Dolomite	*Yes*	*Yes*	*Note 1*
Polish Resistant Aggregates	*Yes*	*Yes*	*Note 1*
Crushed Stone	*~~Yes~~ No*	*No*	*No*
Gravel	*~~Yes~~ No*	*No*	*No*
NOTE 1. Polish resistant aggregate or crushed dolomite may be used when blended with ACBF or sandstone but cannot exceed 50% of the coarse aggregate by weight (mass), or cannot exceed 40% of the coarse aggregate by weight (mass) when blended with SF.			

411.03 Design Mix Formula

The Contractor shall submit a Design Mix Formula, DMF, for the specific materials to be used on the project to the District Testing Engineer one week ~~seven calendar days~~ prior to use. The DMF shall state the following (all percentages are based on the dry weight of the aggregate):

(a) source of each individual material
(b) The aggregation gradation shall be in accordance with the following:

Sieve Size	*Surface/Leveling*	*Rut Fill~~ing~~**
3/8 in. (9.5 mm)	*100*	*100*
No. 4 (4.75 mm)	*85-100*	*70-90*
No. 8 (2.36 mm)	*50-80*	*45-70*
No. 16 (1.18 mm)	*40-65*	*28-50*
No. 30 (600 µm)	*25-45*	*19-34*
No. 50 (300 µm)	*13-25*	*12-25*
No. 100 (150 µm)	*7-18*	*7-18*
No. 200 (75 µm)	*5-15*	*5-15*
** If rut fill course is used as a surface application, the aggregates shall be in accordance with the Surface Aggregate Table above.*		

(c) percentage of aggregate
(d) percentage of mineral filler (minimum and maximum)
(e) percentage of water (minimum and maximum)
(f) percentage of mix set additives (if required)
(g) percentage of polymer modified CSS-1h emulsified asphalt
(h) state the quantitative effects of moisture content on the unit weight of the aggregate
(i) results for the tests in the following:

APPROVED MINUTES

Characteristic	*Test Method ISSA**	*Requirement*
Wet Cohesion *30 Minutes, Min. (Set Time)* *60 Minutes, Min. (Traffic)*	*TB-139***	 *12 kg-cm* *20 kg-cm*
Wet Stripping, Min.	*TB-114*	*90%*
Wet Track Abrasion Loss *60 Minutes Soak, Max.*	*TB-100*	 *536 g/m²*
Saturated Abrasion *Compatibility, Max*	*TB-144*	 *3g loss*
Mix Time @ 77°F (25°C)	*TB-113***	*Controllable to 120 s*
Mix Time @ 104°F (40°C)	*TB-113***	*Controllable to 35 s*

* *International Slurry Surfacing Association*

** *The TB-139 (set time) and TB-113 (mix time) tests shall be checked at the highest temperature expected during construction. For the TB-113 test at ~~40~~ 104°F (~~104~~ 40°C), all ingredients and containers shall be preheated.*

411.04 Pre-Paving Coordination

A pre-paving meeting between the Contractor and Engineer will be held on-site prior to beginning work. The agenda for this meeting will include as a minimum:

(a) Contractor's detailed work schedule
(b) traffic control plan
(c) calibration of equipment
(d) Design Mix Formula/Job Mix Formula
(e) inspection and evaluation of the condition and adequacy of equipment, including units for transport of materials
(f) ~~conflict resolution team members~~ Quality Control Plan in accordance with ~~411.16~~ ITM 803

CONSTRUCTION REQUIREMENTS

411.05 Preparation of Surfaces

The Contractor shall be responsible for all surface preparation ~~including cleaning and the removal of all pavement markings and all other work~~ that may affect the performance of warranted micro-surfacing. ~~Drainage structures, monument boxes, water shut-offs, etc.,~~ All castings, detector housings, and snowplowable raised pavement markers shall be protected during application of material.

411.06 Opening to Traffic

~~The latex modifier shall be capable of producing an emulsified asphalt paving mixture that cures at a rate, which shall permit traffic on the pavement within one hour after application without damaging the pavement surface.~~

The micro-surface shall be capable of being opened to traffic within 1 hour after application. If the micro-surface is not stable under traffic loading within 1 hour of placement, the Contractor shall immediately cease operations. Prior to resuming operations, the Contractor shall notify the Engineer of the cause and the corrective action to be taken.

APPROVED MINUTES

411.07 Finished Pavement Properties

~~*The surface area shall not contain ripples greater than 1/8 in. (3 mm) measured by a 3 ft (1 m) straight edge. The surface shall not exhibit tear marks greater than 1/2 in. (13 mm) wide and 4 in. (100 mm) long, or a mark greater than 1 in. (25 mm) wide and 1 in. (25 mm) long.*~~

Pavement smoothness shall be in accordance with 401.18 except profilograph requirements will not apply. Smoothness requirements shall not apply to shoulder micro-surface placed separately.

The longitudinal construction joints and lane edges shall coincide with the proposed painted lane lines. Longitudinal joints shall be constructed with less than a 3 in. (75 mm) overlap on adjacent passes and no more than 1/4 in. (6 mm) overlap thickness measured with a 10 ft (3 m) straight edge in accordance with 409.03(f). If applicable, overlapping passes shall be on the uphill side to prevent ponding of water. Construct neat and uniform transverse joints with no more than a 1/8 in. (3 mm) difference in elevation across the joint as measured with a 10 ft (3 m) straight edge. The lane edge shall be neat and uniform with no more than 2 in. (50 mm) of horizontal variance in any 100 ft (30 m).

~~*For multiple course applications, the surface of a lane shall not deviate more than 1/4 in. (6 mm) in the wheel path when measured transversely with a 10 ft (3 m) straight edge.*~~

411.08 Warranty

Upon completion of all warranted micro-surfacing and opening to unrestricted traffic, the Warranty Bond shall be in effect for a total of three years. The warranty bond shall be properly executed by a surety company satisfactory to the Department and be payable to the State of Indiana and submitted with the Contractor's bid.

The warranty bond shall be an amount equal to 100% of the contract total for the warranted micro-surfacing excluding patching or other work included in the contract. The bond is intended to insure completion of required warranty work, including payments for all labor, equipment, materials and closure periods used to remediate any warranted distresses.

Upon the final acceptance of the project, the contractual obligations of the Contractor are satisfied as long as the micro-surfacing continues to meet or exceed the warranted values as defined herein.

All warranty work shall be accomplished in accordance with 411.10. At the end of the warranty period, the Contractor will be released from further warranty work or responsibility, provided all previous warranty work has been satisfactorily completed and approved by the Department.

411.09 Conflict Resolution Team

The scope of ~~the~~ work for the ~~Team~~ conflict resolution team includes all issues concerning the warranted pavement relative to the quality control plan, material selection, warranted pavement evaluations, distress indicators, remedial action, and remediation plans.

APPROVED MINUTES

The ~~Team~~ team will consist of two Contractor representatives, two Department (~~District and Central Office Construction Engineer and Office of Materials Management Asphalt Engineer)~~ representatives, and a fifth person mutually agreed upon by both the Department and the Contractor. All costs for the fifth person will be equally shared between the Department and the Contractor.

The ~~Team~~ team members will be identified in writing ~~at the pre-construction meeting~~ when needed and will be knowledgeable in the terms and conditions of this warranty and the methods used in the measurement and calculation of pavement distress. ~~Should any impasse develop, the~~ The ~~Team~~ team will render a final recommendation to the Chief Engineer by a majority vote. Each member has an equal vote.

411.10 Warranty Work

During the warranty period, remedial work shall be performed at no cost to the Department and shall be based on the results of pavement distress surveys. Remedial work to be performed and materials to be used shall be a decision of the Contractor with approval of the Department. Prior to proceeding with any warranty work or monitoring, ~~a Miscellaneous Permit~~ all necessary permits shall be obtained from the Department.

During the warranty period, the Contractor may monitor the warranted micro-surfacing using non-destructive procedures. All proposed remedial action~~(s)~~s shall be coordinated with the Department.

Coring, milling or other destructive procedures may not be performed by the Contractor, without prior consent of the Department. The Contractor will not be responsible for damages to the pavement as a result of coring, milling or other destructive procedures conducted by the Department.

The Contractor will have the first option to perform the remedial work. If, in the opinion of the ~~Department~~ Engineer, the problem requires immediate attention for safety of the traveling public and the Contractor cannot perform the remedial work within 24 hours~~,~~ of notification the Department has the option to have emergency ~~the~~ remedial work performed by other forces. The Contractor shall be responsible to pay for all ~~the~~ costs incurred by the Department for emergency remedial work. Remedial work performed by other forces will not alter the requirements, responsibilities, or obligations of the warranty.

411.11 Pavement Distress Indicators, Thresholds, and Remedial Action

The Department will use the following pavement distress indicators throughout the warranty period:

(a) Rutting – transverse displacement of the micro-surfacing ~~transversely to create a rut~~
(b) Delamination – physical separation of the micro-surfacing that exposes the underlying surface within a wheelpath
(c) Raveling – wearing away of the micro-surfacing
(d) Skid Resistance – friction number as measured by ASTM E 274 and E 524

~~*The Department procedures for the measurement, evaluation, and reporting of pavement distresses for warranted micro-surface pavements are contained in 411.17.*~~

APPROVED MINUTES

~~The threshold values for each 300 ft (100 m) evaluation section are as follows:~~

The pavement threshold values for the ~~warranted distresses~~ pavement distress indicators will be evaluated for the entire length of the contract for each lane. The threshold values for the ~~Pavement~~ pavement ~~Performance~~ distress ~~I~~indicators are listed below:

	Single Location	Multiple Location/mile
Delamination	0.5 yd^2	1.0 yd^2
Raveling	0.5 yd^2	1.0 yd^2

Rut Depth .....average 1/4 in. (6 mm)
~~Delamination.....0.1%~~
~~Raveling.....0.1%~~
Friction Number*.....average 35, no value less than ~~25~~ 30
* Individual friction tests will be done in each lane every 1/2 mi for the length of the contract.

The Department ~~will monitor~~ may evaluate the warranted micro-surfacing during the warranty period. A final condition survey will ~~occur~~ be made by the Department and the Contractor will be notified in writing of all ~~required~~ sections exceeding the warranty ~~work~~ threshold~~s~~ at least 90 days in advance of the expiration of the ~~W~~warranty ~~Bond~~ period.

If any of the threshold levels are met or exceeded, the Contractor shall recommend remedial action to the Department. After the remedial action is approved, the Contractor shall perform the remedial work.

Remedial action shall be ~~performed on all segments of the project~~ taken within 30 calendar days of the date the Contractor is notified ~~where the~~ that a threshold level~~s~~ ~~are~~ has been met or exceeded by the final condition survey. ~~If areas of warranted pavement, which are not within the measured area, are suspected of meeting or exceeding a threshold level, the Department will conduct a distress survey to see if a threshold level has been met or exceeded.~~ If threshold levels are met or exceeded within the warranty period, the Contractor shall submit for approval his recommended remedial action and work schedule.

~~Remedial action shall be taken by October 1 of the same calendar year as the Contractor is notified that a threshold level has been met or exceeded.~~ If, anytime during the warranty period, 30% or more of the project segment require, or have received remedial action, the entire project shall receive a remedial action as determined by the Contractor and the Department. If an impasse develops, the ~~Team~~ team will make a final recommendation.

If remedial action work or elective/preventive action work performed by the Contractor necessitates a corrective action to the pavement markings, adjacent lane~~(s)~~s or roadway shoulders, such corrective action to the pavement markings, adjacent lane~~(s)~~s, and shoulders shall be the responsibility of the Contractor.

Warranty requirements for all remediation work will be limited to the life of the original contract warranty.

APPROVED MINUTES

If any of the threshold levels are met or exceeded and the Contractor does not agree to the pavement distress survey, ~~results~~ or~~,~~ the Department does not agree with the proposed remedial action, the ~~Team~~ team will provide a recommendation within 30 calendar days.

The Contractor will not be held responsible for distresses that are caused by factors beyond the control of the Contractor. ~~For example, the Contractor will be relieved of the responsibility for the rutting threshold if the cause is not transverse movement of the micro-surfacing.~~ The Contractor shall be responsible for materials and workmanship problems.

411.12 Elective/Preventive Action

Elective~~/~~ or preventive action ~~will~~ may be performed by the Contractor~~'s option~~ with ~~the~~ concurrence ~~of~~ from the Department.

411.13 Department Maintenance

The Department will perform routine maintenance operations during the warranty period such as plowing, applying de-icing chemicals, repairs to safety appurtenances, pavement markings, mowing and sign maintenance. The Department, during the warranty period, will perform no routine pavement surface maintenance activities.

411.14 Method of Measurement

Micro-Surfacing, Warranted, ~~micro-surfacing~~ of the type specified will be measured by the square yard (square meter) of the surface course. The width of the ~~pavement~~ surface course will be the width placed. The length of the surface course will be measured along the centerline of each roadway or ramp.

Only the micro-surface surface course will be measured for payment.

411.15 Basis of Payment

~~Warranted micro-surfacing~~ The accepted quantities for this work will be paid for at the contract unit price per square yard (square meter) of micro-surface, warranted, of the type specified, complete in place.

Payment will be made under:

Pay Item	***Pay Unit Symbol***
Micro-Surfacing, Warranted, Single Course	*~~SYD~~ SYS (m2)*
Micro-Surfacing, Warranted, Multiple Course	*~~SYD~~ SYS (m2)*

The cost of furnishing materials, equipment, labor, maintenance of traffic, underlying micro-surface courses, and tack coat, if required, and all incidentals shall be included in the cost of micro-surfacing, warranted, of the type specified.

~~411.16 Quality Control Plan for Warranted Micro-Surfacing~~

~~This section covers the preparation of a QCP by a contractor. The QCP shall be provided, maintained, and followed to assure all materials furnished and placed for acceptance are in accordance with the contract requirements.~~

APPROVED MINUTES

~~*The Contractor shall produce a mixture that will be in compliance with the DMF and the quality control tolerances. The methods described in this section shall be used by the Contractor to measure compliance. The Contractor shall maintain all quality control documentation and make a copy available to the Engineer upon request or at completion of the contract.*~~

~~*The QCP shall be project specific and state how the Contractor proposes to control the materials, equipment, and production methods on the project. The QCP shall contain the name, qualifications, telephone number, duties, and employer of all quality control personnel necessary to implement the QCP.*~~

~~*The QCP shall contain, but not be limited to, the proposed methods of sampling, testing, calibration, construction control, and monitoring. It shall include proposed corrective actions to be taken if defects in the finished surface occur.*~~

~~***(a) Fine Aggregate***~~

~~*The Contractor shall sample from the project stockpile and test for gradation at a rate of one per 500 t (500 Mg) of aggregate used, or a minimum of one per day of mixture production. The quality control tolerances from the DMF are as follows:*~~

~~*Sieve Size*~~	~~*Tolerance*~~
~~*No. 4 (4.75 mm)*~~	~~*± 5.0%*~~
~~*No. 8 (2.36 mm)*~~	~~*± 5.0%*~~
~~*No. 16 (1.18 mm)*~~	~~*± 5.0%*~~
~~*No. 30 (600 µm)*~~	~~*± 5.0%*~~
~~*No. 50 (300 µm)*~~	~~*± 4.0%*~~
~~*No. 100 (150 µm)*~~	~~*± 3.0%*~~
~~*No. 200 (75 µm)*~~	~~*± 3.0%*~~

~~***(b) Sand Equivalent Test***~~

~~*ASTM D 2419 AASHTO T 176 shall be performed with each applied aggregate gradation. Quality control tolerance is ± 7% of the DMF as established in the mix design.*~~

~~***(c) Asphalt Content***~~

~~*The Contractor shall calculate the percent asphalt content of the mixture from the equipment counter readings randomly, a minimum of three times a day. The quality control single test tolerance is ± 0.5% and the average daily asphalt content is ± 0.2% from the DMF.*~~

~~***(d) Application Rate***~~

~~*The Contractor shall state the application rate of the micro surface. The Contractor shall calculate the yield of the course being placed from the equipment counter readings randomly, a minimum of three times a day. The quality control tolerance from the specified application rate is ± 1.8 lb/syd (± 1 kg/m²).*~~

~~***(e) Joints***~~

~~The Contractor shall state the procedure for the construction of the longitudinal and transverse joints. The starting and stopping procedures of the seal coat equipment for transverse joints shall be included.~~

~~**(e) (f) Documentation**~~

~~The Contractor shall maintain a daily report, providing the following information.~~

1. ~~Control section~~
2. ~~Job number~~
3. ~~Route~~
4. ~~Date~~
5. ~~Air temperature~~
6. ~~Control settings (calibration values, unit weight of emulsion, percent residue of emulsion)~~
7. ~~Beginning and ending intervals~~
8. ~~Counter readings (and beginning, and ending, and total)~~
9. ~~Length, width, total area, aggregate quantity, emulsion quantity~~
10. ~~Percent of each material, percent of asphalt cement, application rate, combined application rate~~
11. ~~Contractor's authorized signature~~
12. ~~Aggregate gradations~~
13. ~~Aggregate delivery tickets~~
14. ~~Asphalt emulsion bill of lading~~
15. ~~Sand equivalent value~~
16. ~~Theoretical application rate (not applicable to rut fill course)~~
17. ~~Yield~~

~~A statement that all material certification, production test reports, quality control charts, test equipment certifications and calibrations, and all other material and/or design or production related records shall be maintained for a period to include the terms of the warranty. The records, either electronic and/or hard copies, shall be maintained in a readily accessible location for access by the Department at any time. Upon completion of the placement, and the opening of the warranted micro-surfacing to traffic, a copy of all records shall be provided to the Department District Construction Engineer and the Office of Pavement Engineering.~~

~~**411.17 Measurement, Evaluation And Reporting Of Pavement Distress For Warranted Micro-surfacing**~~

~~The Department will perform routine evaluations of the warranted pavement during the warranty period. During the warranty period, the Contractor has the right, with Department concurrence, to independently review the condition of the warranted pavements for their use and information.~~

~~**(a) Measurement**~~

~~The Department will be using the Friction and the Highway Performance Monitoring System (HPMS) programs to evaluate the warranted pavement distress indicators.~~

~~1. The Office of Research oversees the friction Testing Program. Warranted pavement friction program will be in accordance with Section 5.3 of the program, dated December 2003 or later.~~

~~2. The Planning Division oversees the Highway Performance Monitoring System program.~~

~~**(b) Evaluation**~~

~~The Department will evaluate the condition of the pavements on the Interstate system annually and bi-annually for non-Interstate routes for the identified pavement performance indicators. During the warranty period, exclusive of the last year, the evaluations will be conducted on driving lanes throughout the length of the project except for friction testing which will be conducted on the driving and passing lane or middle lane or No. 2 lane for multi-lane facilities. The final year evaluations will be conducted in every lane throughout the length of the project for all pavement performance indicators.~~

~~**(c) Friction**~~

~~Friction testing on the warranted micro-surfacing contract section will be by the use of a Locked Wheel Trailer as defined by ASTM E 274 and a smooth tire in accordance with ASTM E 524. Friction tests will be conducted in all lanes at each reference post and at the halfway point between the reference posts. A minimum of 11 tests will be conducted. If the number of tests is less than 11, additional tests will be taken at the quarter point between the reference post and the halfway point. The number of locations will depend on the length of the project. The friction values of each site per lane will be determined.~~

~~**(d) Rutting**~~

~~The Department will rate rutting at the time of routine condition survey for the warranted micro-surface.~~

~~Sensors on the van will measure the rut depth of each wheel path in an approximation of the measurement obtained using the commonly accepted four-foot straight-edge method. The readings shall be continuous along the length of the segment. The average rut depth of both wheel paths for each 300 ft (100 m) segment will be determined.~~

~~The rut measurement will be made with the van using at least three/five readings across the pavement surface. These readings will be taken at the approximate right wheel path center, center of the lane, left wheel path center. The sensors measure the relative height from the sensor to the surface and calculate the rut as the relative differences of the readings.~~

~~**(e) General Pavement Distresses**~~

~~The Department will monitor pavement warranty performance for acceptance. Delamination, raveling, and rutting are measured the entire length of the warranty contract section, but only in the specific lanes. Friction is not sampled continuously in the sections. If any values exceed the thresholds, more detailed testing and inspection may be conducted to determine the extent and limits of the deficiency. All areas outside the tested lanes or sample sections observed to show deficiencies may also be tested and used to~~

APPROVED MINUTES

~~*determine the pavement warranty acceptability and to verify the uniformity of the quality of the project.*~~

~~***(f) Reporting***~~

~~***1. Friction Testing Evaluation***~~

~~*The Office of Research will prepare a summary report of the results of the testing and submit the results to the Manager, Office of Pavement Engineering.*~~

~~***2. Rutting Testing Evaluation***~~

~~*The Manager, Office of Pavement Engineering will prepare a summary report of the results of the testing.*~~

~~***3. Performance Pavement Distress Indicators Evaluation***~~

~~*The Office of Pavement Engineering will compile the results and determine the acceptability of the sections as compared to the threshold values listed in 411.11. A recommendation will be submitted to the State Construction Engineer for final acceptance/remediation. Final acceptance will not be recommended prior to receipt of the Warranted Project Quality Control Information in accordance with 411.16.*~~

411.~~18 17~~16 Final Warranty Acceptance

The ~~Office of Pavement~~ Engineer~~ing~~ will review the project in the field for any obvious general defects not addressed in the indicators and recommend a Final Warranty Acceptance. ~~The State Construction Engineer will review the recommendation and issue~~ The Construction Management Division will issue the Contractor a Final Warranty Acceptance letter.

APPROVED MINUTES

REVISION TO RECURRING SPECIAL PROVISION

411-R-432, CONTINUED.

APPROVED MINUTES

Other sections containing specific cross references:

None

General Instructions to Field Employees
Update Required? No

Frequency Manual
Update Required? No

***NOTE**: ITM 803 will need to be revised to reflect the QCP requirements for this specification.*

Recurring Special Provisions potentially affected:

See Above

Standard Sheets potentially affected:

None

Motion: Mr. Andrewski
Second: Mr. Kuchler
Ayes: 10
Nays: 0

Action: Passed as revised

_x_ RSP Effective: January 2009 Letting
RSP Sunset Date: January 2012
___ RPD Effective: _____ Letting
___ 20__ Standard Specifications Book
___ 20__ Standards Edition
___ 20__ Design Manual
_x_ Technical Advisory

Received FHWA Approval? Yes

52-11.0 PREVENTIVE MAINTENANCE

Preventive Maintenance (PM) treatments are part of the overall pavement preservation program. A PM project is intended to arrest light deterioration, retard progressive damage, and reduce the need for routine maintenance. PM treatments typically do not add structural strength to the pavement. The proper time for PM is before the pavement experiences severe distress, structural problems, and moisture- or aging-related damage. These activities can be cyclical in nature and may correct minor deficiencies as a secondary benefit. For PM treatment service life, see Table 52-12A. When considering a PM treatment, the overall program schedule of the pavement section should be considered. To achieve the optimal benefit of the PM treatment, it should not be applied if a rehabilitation is planned within the service life of the PM treatment.

A PM treatment is not used where the scope of work is to correct pavement cross slope, horizontal alignment, vertical alignment, superelevation problems, placement of a turn lane or auxiliary lane, improvement of public-road approach or drive, or guardrail adjustment or repair. A PM project may include incidental enhancements or combinations at an isolated location in accordance with Chapter Fifty Six.

The most commonly used PM treatments are detailed in the following sections.

Drainage Inspection and Cleaning. Regardless of the pavement type, proper drainage is essential to the performance of the pavement. Drainage inspection and cleaning consists of the inspection of drainage structures, e.g., underdrain outlets, ditches, catch basins, inlets, and the cleaning of these structures to maintain or restore the flow of water. The locations of underdrains should be identified and the outlets periodically cleaned. The INDOT *Maintenance Management Field Operations Handbook* provides for drainage inspection and cleaning details.

52-11.1 HMA PM Treatments

1. Crack Sealing. Crack sealing is the cleaning and sealing of open cracks or joints in asphalt pavement and shoulders to prevent the entry of moisture and debris. Cracks must be clean and dry and may be routed prior to sealing. This technique may be used for sealing cracks on a newer composite pavements where reflective cracks have developed. This PM treatment may be periodic once more cracks develop as the pavement ages.

    a. AADT – Crack sealing may be performed at any traffic volume, provided adequate
    traffic control is provided.

    b. Pavement Distresses – Crack sealing may be used to correct low to medium severity surface cracks.

    c. Rutting – Crack seal does not correct rutting.

    d. Roughness – Crack sealing does not affect roughness. Roughness is typically not a consideration for crack sealing.

APPROVED MINUTES

e. Friction – Friction is typically not a consideration for crack sealing. However, overband crack sealing may lower the FN.

f. Surface Aging – Crack sealing does not correct any surface aging deficiencies.

2. Fog Sealing. Fog seals are a method of adding asphalt to an existing pavement surface to improve sealing or waterproofing, prevent further stone loss by holding aggregate in place, or simply improve the surface appearance. However, inappropriate use can result in slick pavements and tracking of excess material. The pavement section should show no structural deficiencies prior to fog sealing. Fog seal should not be applied on mainline dense graded surface.

   a. AADT – Typically low volume (less than 5,000 AADT). However, fog seal may be considered on a higher volume road if traffic can be controlled.

   b. Pavement Distresses – Low severity environmental related surface cracks.

   c. Rutting – Fog seal does not correct rutting.

   d. Roughness – Fog sealing does not affect roughness.

   e. Friction – Fog seal should not be applied to a road with a low FN. Fog seal will reduce FN for a period until the material fully cures.

   f. Surface Aging – A fog seal may be used to restore an aged, oxidized and raveled surface.

3. Seal Coat. Seal Coat is the treatment of the pavement surface with liquid asphalt material and coarse aggregate to prevent deterioration of the surface. It provides waterproofing, low-severity crack sealing, and improved friction. The pavement section should show no structural deficiencies prior to chip sealing. Isolated areas with structural deficiencies shall be repaired prior to chip sealing. A previously seal coated surface may be sealed a second time.

   For mainline pavement over 1,000 ADT, Asphalt for Seal Coat, P should be specified. Seal coat should be paid for by the square yard for quantities up to 1,000 SYD. Seal coat should be paid for by tons of aggregate and tons of asphalt material for quantities over 1,000 SYD.

   The following types of seal coats should be used as follows:
   Types 2 and 3 (or 2P and 3P) – These are single course seal coats appropriate for paved mainline or shoulders.
   Types 5, 6, and 7 (or 5P, 6P and 7P) – These are double course seal coats appropriate for unpaved mainline or unpaved shoulders.

   Guidelines for selecting a pavement section for seal coat are as follows:

   a. AADT – Typically low volume (less than 5,000 AADT for mainline; shoulders can be done on any ADT road). However, seal coat may be

APPROVED MINUTES

considered on a higher volume road if traffic can be controlled (i.e. total road closure, extended lane closures).

b. Pavement Distresses – A seal coat will mitigate low severity environmental related surface cracking.

c. Rutting – Less than 0.25”. Seal coat does not correct rutting.

d. Roughness – A seal coat may increase the IRI, depending on the size of aggregate used.

e. Friction – A pavement with a low friction number (FN) should be considered for a surface treatment. A seal coat will restore surface friction.

f. Surface Aging – A seal coat may be used to restore an aged, oxidized and raveled surface.

4. Microsurfacing. Microsurfacing is a thin polymer-modified asphalt emulsion mixture. Microsurfacing may be used to provide a new wearing course over aged and oxidized pavement, improve friction, and fill ruts. An existing pavement should have no large cracks or excessive irregularities such as shoving. Cores should be taken to determine the void content of the existing-pavement layers to determine the stability and permeability of the existing pavement. Core data and cost data should be reviewed with the Office of Pavement Engineering for specific recommendations.

All pavement markings and raised pavement markers must be removed prior to placement of a microsurface. This will be included in the appropriate removal pay items.

If a pavement cross section has irregularities that will require a leveling course or ruts greater than 0.25” that will require a rut fill course, a multiple course microsurface should be specified. Otherwise, specify a single course microsurface.

a. AADT – Microsurface may be used on roads with any traffic volume. When properly placed, traffic may be opened after 1 hour.

b. Pavement Distresses – A microsurface may be used on roads with low severity surface cracks. Cracks will typically reflect through the microsurface in a short time period.

c. Rutting – Microsurface may be used to correct rutting up to 0.50”.

d. Roughness – IRI of 150 or less. Microsurface will not significantly improve surface roughness.

e. Friction – A pavement with a low friction number (FN) should be considered for a surface treatment. . A microsurface will restore surface friction.

f. Surface Aging – A microsurface may be used to restore an aged, oxidized and raveled surface.

APPROVED MINUTES

5. Ultrathin Bonded Wearing Course. Ultrathin bonded wearing course (UBWC) is a gap graded, ultra thin hot-mix asphalt mixture applied over a thick polymer-modified asphalt emulsion membrane. The emulsion membrane seals the existing surface and produces high binder content at the interface of the existing roadway surface. The gap-graded mix is placed with the emulsion membrane in one pass. Core data and cost data should be reviewed with the Office of Materials Management's Asphalt Team for specific recommendations.

    a. AADT – UBWC may be used on roads with any traffic volume. When properly placed, traffic may be opened after 1 hour.

    b. Pavement Distresses – A UBWC may be used on roads with low to moderate severity surface cracks.

    c. Rutting – Since UBWC is placed in a single course, it should not be placed on roads with rutting over 0.25".

    d. Roughness – IRI of 150 or less. UBWC will not significantly improve surface roughness.

    e. Friction – A pavement with a low friction number (FN) should be considered for a surface treatment. A UBWC will restore surface friction.

    f. Surface Aging – A UBWC may be used to restore an aged, oxidized and raveled surface.

6. HMA Inlay. A thin HMA inlay, or milling and filling, consist of milling the existing surface and replacing it with a new asphalt surface to the original surface elevation. At a minimum, milling should consist of profile scarification. For PM, the surface condition may have minor defects but should not have significant potholes, depressed cracks, or major distresses. Correct timing of the treatment is critical to its longevity. Criteria to be used in considering a thin HMA inlay are as follows:

    a. AADT – An HMA inlay may be used on roads with any traffic volume. Traffic may be allowed on a newly placed HMA in less than 1 hour.

    b. Pavement Distresses – An HMA inlay will correct low to moderate severity surface cracks with surface corrugations or washboarding.

    c. Rutting – An HMA inlay will correct rutting up to 0.75".

    d. Roughness – IRI of 150 or less. An HMA inlay will significantly improve the surface roughness.

    e. Friction – A pavement with a low friction number (FN) should be considered for a surface treatment. An HMA inlay will restore surface friction.

    f. Surface Aging – An HMA inlay may be used to restore an aged, oxidized and raveled surface.

52-11.2 PCCP PM Treatments

APPROVED MINUTES

1. PCCP Sawing and Sealing Joints. Contraction joints and longitudinal joints on concrete pavement should be inspected periodically and cleaned and resealed as required. For PM, timely sealing of the joints prevents dirt and moisture from entering the joints. Rigid pavement, 8 to 10 years old, should be inspected. If, on inspection, 10% of the joints have loose, missing, or depressed sealant, sawing and sealing of the joints should be considered. The joints should be sawed to remove old sealant and cleaned to reshape the joint seal reservoir.

2. Retrofit Joint Load Transfer. Retrofit joint load transfer consists of the retrofitting of dowels in jointed PCCP to re-establish load transfer across the contraction joints or random cracks. The pavement performance is improved by means of reducing pumping, corner breaks, or faulting. This work consists of the cutting of slots, placing new dowels or reinforcing bars therein, then cementing them into place. Life-cycle cost analysis should be applied to check for the cost-effectiveness of this PM treatment.

3. Diamond Grinding. Diamond grinding is a procedure used to restore or improve pavement rideability by removing surface defects that develop based on traffic loading and environmental conditions. As traffic, primarily trucks, uses the roadway and encounters deteriorated joints or other surface defects, the trucks begin to bounce vertically resulting in accelerated dynamic loading of the pavement. The increased loading in the pavement consequently increases the rate of deterioration and further reduces the serviceability, increases user costs, and increases maintenance costs. Diamond grinding enhances surface friction of an existing pavement surface. The resulting corduroy-like surface provides ample channels for water to escape the surface resulting in reduced hydroplaning potential. Diamond grinding is recommended to restore rideability if faulting exceeds ½ in. for 20% of the joints, and the IRI is below 150.

4. Partial Depth Patching. Partial depth patching is primarily used to improve ride quality and seal the pavement surface by repairing localized areas of surface deterioration. Partial depth patching should be limited to the upper one third of the concrete pavement depth. The area to be patched should be sawed and all unsound material removed prior to placement of patch material.

5. Full Depth Patching. Full depth patching consists of complete removal of a deteriorated section of concrete pavement and replacement with new concrete. Full depth patching may be used to restore pavement rideability and replace deteriorated joints and cracks. Consult INDOT standard drawings for full depth patching details.

6. Underseal. Underseal consists of pumping flowable asphalt or cement material into voids under concrete pavement. This will stabilize the slab, prevent rocking and pumping, and extend the life of the pavement. Falling weight deflectometer (FWD) testing must be done in advance of undersealing to determine locations and material quantities.

7. Slab Jacking. Slab jacking consists of raising a settled slab to its original profile grade by pumping flowable material underneath. This technique may be used on one or several panels to restore rideability. Panels should be intact with no mid-panel cracking.

APPROVED MINUTES

PROPOSAL TO STANDARDS COMMITTEE

PROBLEM(S) ENCOUNTERED: Revised specification. Current spec is outdated and not in line with best practices of other states and transportation agencies.

PROPOSED SOLUTION: Revised spec will provide a better finished product by stricter control on application dates, rates, materials, and techniques.

APPLICABLE STANDARD SPECIFICATIONS: Proposed 404

APPLICABLE STANDARD DRAWINGS: N/A

APPLICABLE DESIGN MANUAL SECTION: 52-11.0

APPLICABLE SECTION OF GIFE: Unknown

APPLICABLE RECURRING SPECIAL PROVISIONS: N/A

Submitted By: Dave Andrewski

Title: Manager, Office of Pavement Engineering

Organization: INDOT

Phone Number: 317-232-5452

Date: May 15, 2008

APPLICABLE SUB-COMMITTEE ENDORSEMENT?

Pavement Steering Committee (June 5, 2008 Meeting)- John Weaver, Dave Andrewski, Jeff James, Kumar Dave, Tommy Nantung, John Wright, Athar Khan, Todd Shields, Shakeel Baig, Doug Moser, Dwane Myers, Lee Randell, Jeff Logman, Khalil Dughaish, Tom Duncan, Lloyd Bandy, Mike Byers, Paul Berebitsky, Larry Galehouse

Pavement Preservation Subcommittee (June 5, 2008 Meeting) - Todd Shields, Scott Trammell, Mike Bowman, Bill Tompkins, Doug Moser, Khalil Dughaish, Tommy Nantung, Ju Sang Lee, Kerry Land, Dave Andrewski, Tom Duncan

INDOT/APAI TECHNICAL COMMITTEE (June 20, 2008 Meeting) – Ron Walker, Mike Prather, Matt Beeson, Harley Phillips, Kurt Sommer, Jeff James, Chriss Jobe, Tom Duncan, Lloyd Bandy, Pete Capon, Dudley Bonte, Dan Brown, Brad Cruea, Gerry Huber, Alvin Evans, Ryan Shotts, Brian Crume, Lynn Shireman, Vic Shipbauch

APPROVED MINUTES

SECTION 404, BEGIN LINE 1, DELETE AND INSERT AS FOLLOWS:

SECTION 404 – SEAL COAT

404.01 Description

This work shall consist of one or more applications of asphalt material, each followed by an application of cover aggregate in accordance with 105.03.

404.02 Quality Control

Seal coat shall be constructed according to a quality control plan, QCP, prepared and submitted by the Contractor in accordance with ITM 803; Contractor Quality Control Plan for Seal Coat. The QCP shall be submitted to the Engineer at least 15 days prior to commencing seal coat operations.

MATERIALS

404.~~02~~*03* Asphalt Material

The type and grade of asphalt material shall be in accordance with the following:

Asphalt Emulsion, RS-2, AE-90, AE-90S, or HFRS-2.....902.01(b)

404.~~03~~*04* Cover Aggregate

Aggregate shall be in accordance with the following requirements. When slag is used as an alternate to natural aggregate, adjustments will be made in accordance with 904.01, to compensate for differences in specific gravity.

Coarse Aggregates, Class B or Higher
Size No. 8, 9, 11, or 12 904
Fine Aggregate
Size No. 23 or 24 904

The types of seal coats shall be as follows:

TYPE *(see Note 1)*	APPLICATION	COVER AGGREGATE SIZE NO. AND COURSE	RATES OF APPLICATION PER SQUARE YARD (SQUARE METER)	
			AGGREGATE lb (kg)	ASPHALT MATERIAL GALLON (LITER) AT 60°F (16°C)
1 *or 1P* *(see Note 2)*	Single	23, 24	12-15 (5.4-6.8)	0.12-0.16 (0.45-0.61)
2 *or 2P*	Single	12	14-17 (6.4-7.7)	0.29-0.33 (1.09-1.25)
3 *or 3P*	Single	11	16-20 (7.3-9.1)	0.36-0.40 (1.36-1.51)
4 *or 4P*	Single	9	28-32 (12.7-14.5)	0.63-0.68 (2.38-2.57)
5 *or 5P*	Double	Top – 12	16-19 (7.3-8.6)	0.33-0.37 (1.25-1.40)

APPROVED MINUTES

		Bottom – 11	16-20 (7.3-9.1)	0.36-0.40 (1.36-1.51)
6 *or 6P*	Double	Top – 11 Bottom – 9	18-22 (8.2-10.0) 28-32 (12.7-14.5)	0.41-0.46 (1.55-1.74) 0.63-0.68 (2.38-2.57)
7 *or 7P*	Double	Top – 11 Bottom – 8	18-22 (8.2-10.0) 28-32 (12.7-14.5)	0.41-0.46 (1.55-1.74) 0.63-0.68 (2.38-2.57)
~~* Only AE-90 or AE-150 shall be used for seal coat, type 1~~. *Note 1 – AE-90S shall be used for Type P Seal Coats. Note 2 – HFRS-2 shall not be used with Type 1 Seal Coat.*				

CONSTRUCTION REQUIREMENTS

404.~~04~~*05* Weather Limitations

Asphalt material shall not be applied on a wet surface, or when other weather conditions would adversely affect the seal coat~~s~~. Seal coat~~s~~ shall not be placed when the ambient or ~~base~~ *pavement* temperature is below ~~40°F (4°C)~~ *60°F (14°C)*. ~~If seal coats are placed when the ambient or base temperature is between 40°F (4°C) and 60°F (16°C), the cover aggregate shall be heated to between 120°F (49°C) and 150°F (66°C)~~. *Seal coat shall not be applied to travel lanes or auxiliary lanes before May 1 or after October 1, but may be applied to shoulders within the above temperature range.*

404.~~05~~*06* Equipment

A distributor, rotary power broom, pneumatic tire roller, and aggregate spreader in accordance with 409.03 shall be used.

404.~~06~~*07* Preparation of Surface

Surfaces to be sealed shall be *patched as shown on the plans or as directed,* brought to proper section and grade, *and* compacted~~, cleaned as required, and approved~~.

The surface shall be cleaned of all loose material prior to seal coat application. ~~*The pavement shall be swept clean of all loose material using a rotary power broom. Foreign or loose material not removed by the brooming operation shall be cleaned by other means.*~~ *Sealing operations may not commence until the surface is approved.*

All castings, detector housings, and snowplowable raised pavement markers shall be covered prior to applying the asphalt material to prevent coating with seal coat. These coverings shall be removed prior to opening to unrestricted traffic.

404.~~07~~*08* Applying Asphalt Material

Asphalt material shall be applied in a uniform continuous spread over the section to be treated. The quantity of asphalt material to be applied per square yard (square meter) shall be ~~as directed~~ *in accordance with the QCP. During application, minor adjustments to the application rate shall be made in accordance with the QCP.*

The asphalt material shall not be spread over a greater area than that which can be covered with the cover aggregate that is in trucks at the site. ~~It shall not be spread more than 500 ft (150 m) ahead of the aggregate spreader.~~

APPROVED MINUTES

The spread of the asphalt material shall be no wider than the width covered by the cover aggregate from the spreading device. Operations shall not proceed such that asphalt material is allowed to chill, set up, dry, or otherwise impair retention of the cover coat.

404.~~08~~*09* Application of Cover Aggregate

~~Immediately following~~ *Within 1 min of* the application of the asphalt material, cover aggregate shall be spread in quantities as ~~directed~~ *required*. Spreading shall be accomplished such that the tires of the trucks or aggregate spreader do not contact the uncovered and newly applied asphalt material.

~~Rolling shall consist of at least three complete roller coverages and be completed within 30 min after the cover aggregate is applied. The rollers shall not be operated at speeds that will displace the cover aggregate from the asphalt material.~~

~~The seal coat shall be protected by the restriction of traffic or by controlling traffic speed until the asphalt material has cured or set sufficiently to hold the cover aggregate without displacement.~~

~~Excess cover aggregate shall be removed from the pavement surface by light brooming on the day following placement of the seal coat. The brooming shall not displace the imbedded aggregate.~~

404.10 Rolling Operation

The aggregate shall be seated with at least three roller applications. A roller application is defined as one pass of the roller over the width sealed. The first roller application shall be completed within 2 min of aggregate application, with the final application completed within 30 min after the cover aggregate is applied. The rollers shall not be operated at speeds that will displace the cover aggregate from the asphalt material.

404.11 Sweeping Operation

Excess cover aggregate shall be removed from the pavement surface by ~~light~~ brooming no later than the morning after placement of the seal coat. The brooming shall not displace the imbedded aggregate. A second brooming operation shall be performed prior to opening to unrestricted traffic in accordance with 101.33.

404.12 Protection of Surface

Traffic shall not be permitted on the freshly sealed surfaces until final rolling application is complete. The seal coat shall be protected by keeping traffic off of the freshly sealed surface or by controlling traffic speed in accordance with the QCP. Traffic shall not displace the imbedded aggregate.

Any areas with minor bleeding will be covered with fine aggregate or other approved blotting material.

404.~~09~~*13* Method of Measurement

~~Asphalt material and cover aggregate will be measured by the ton (megagram) *in accordance with 109.01(b).*~~ Seal coat will be measured by the square yard (square meter) *of the seal coated surface*.

~~*The measured quantities shall not exceed the rates shown in 404.04.*~~

APPROVED MINUTES

Patching will be measured in accordance with 304.06.

~~If measurement of seal coat is made by the square yard (square meter), the quantity for each day's placement will be the least of the following:~~

~~(a) the measured square yards (square meters) within the specified limits;~~

~~(b) the calculated square yards (square meters) based on the amount of aggregate used, divided by the minimum amount of aggregate per square yard (square meter) specified in 404.03; or~~

~~(c) the calculated square yards (square meters) based on the amount of asphalt material used, divided by the minimum amount of asphalt material per square yard (square meter) specified in 404.03.~~

404.~~10~~*14* Basis of Payment

~~The accepted quantities of asphalt material and cover aggregate will be paid for at the contract unit price per ton (megagram).~~ Seal coat will be paid for at the contract unit price per square yard (square meter) complete in place. ~~If slag is used as a cover aggregate, and payment will be made per ton (megagram), the pay quantity will be adjusted in accordance with 904.01.~~

~~If seal coat is paid for by the square yard (square meter) and if so directed, asphalt material in excess of the limits set out in 404.03 will be paid for at the Contractor's invoice price, plus 20%.~~

Patching will be paid for in accordance with 304.07.

Payment will be made under:

Pay Item	**Pay Unit Symbol**
~~Asphalt for Seal Coat~~	~~TON (Mg)~~
~~*Asphalt for Seal Coat, P*~~	~~*TON (Mg)*~~
~~Cover Aggregate, Seal Coat _____ *type*~~	~~TON (Mg)~~
Seal Coat, _____ type	SYS (m2)
Seal Coat, _____ type P	*SYS (m2)*

The cost of determination of asphalt material and cover aggregate application rates, sweeping and rolling operations, blotting material, and other incidentals shall be included in the cost of the pay items.

The Contractor shall adjust application rates as required by the Engineer within the limits set out herein. No additional payment will be made for additional materials necessary to meet the required application rates within the specified limits.

APPROVED MINUTES

REVISION TO 2008 STANDARD SPECIFICATION

SECTION 404, CONTINUED.

APPROVED MINUTES

Other sections containing specific cross references:

404.03
404.09 Pg 257
404.10 Pg 257

404.09
610.05 Pg 373

404.10
610.06 Pg 373

Recurring Special Provisions potentially affected:

None

Motion: Mr. Andrewski
Second: Mr. Heustis
Ayes: 10
Nays: 0

General Instructions to Field Employees
Update Required? Y___ N___
By - Addition or Revision
Frequency Manual
Update Required? Y___ N___
By - Addition or Revision

Standard Sheets potentially affected:

None

Action: Passed as revised

_x_ RSP Effective: January 2009 Letting
RSP Sunset Date: _____
___ RPD Effective: _____ Letting
_x_ 2010 Standard Specifications Book
___ 20__ Standards Edition
___ 20__ Design Manual
_x_ Technical Advisory

Received FHWA Approval? Yes