INDIANA DEPARTMENT OF TRANSPORTATION

STANDARDS COMMITTEE MEETING

Driving Indiana's Economic Growth

FINAL DRAFT MINUTES

December 18, 2008 Standards Committee Meeting

NOTE: Revisions to First Draft Minutes are highlighted in yellow.

FINAL DRAFT MINUTES

MEMORANDUM

January 8, 2008

TO: Standards Committee

FROM: Mike Milligan, Secretary

RE: Minutes for the December 18, 2008 Standards Committee Meeting

The Standards Committee meeting was called to order by the Chairman at 9:03 a.m. on December 18, 2008 in the N755 Bay Window Conference Room. The meeting was adjourned at 11:35 a.m.

The following members were in attendance:

Mark Miller, Chairman
Dennis Kuchler, Constr. Mgmt.
Ron Heustis, Constr. Mgmt.
Scott Trammell*, Highway Ops.
Ron Walker, Materials Mgmt.
Tom Caplinger, Crawfordsville Dist.
Dave Andrewski, Pvmt. Engineering
Mike Beuchel**, Contract Admin.
John Wright, Roadway Services
Anne Rearick, Structural Services
Joe Novak***, Constr. Mgmt.

**Proxy for Mike Bowman*
***Proxy for Bob Cales*
****Proxy for Jim Keefer*

Also in attendance were the following:

Mike Milligan, Secretary
Bill Knopf, Asphalt Pvmt. Assoc.
Tony Uremovich, INDOT
Alfredo Hanza, INDOT
Prakash Patel, INDOT
Jim Reilman, INDOT
Kumar Dave, INDOT
Steve Fisher,INDOT
Greg Richards, INDOT
Mike Byers, ICPA
Robert Dirks, FHWA
Tom Duncan, FHWA
Paul Berebitsky, ICA

A. GENERAL BUSINESS ITEMS

OLD BUSINESS

(No items on this agenda)

NEW BUSINESS

1. Approval of November 20, 2008 Minutes Approval of the Nov 20, 2008 minutes is pending revisions to be made to agenda items 08-15-2, 08-15-12 and 08-15-16. The final minutes will be distributed to the Committee members for approval via e-mail.

2. Mr. Miller noted that specification sub-committees should not continue to meet just to look for potential specification changes without a specific agenda, preferably approved or assigned by the Standards Committee. Specification sub-committees should focus on cost reduction measures and reduction of recurring special provisions, not just minor changes.

3. A request was submitted by Mr. Caplinger to consider the timing of release of revisions to recurring special provisions and the menu for the provisions. This has caused some confusion and added work by designers in an effort to submit the latest version of the RSP menu at time of Final Tracings. Designers are being told that failure to submit the latest version, whether it affects their contract or not, will result in lower evaluation of the designer by the contracts section.

A schedule will be considered for revisions to RSPs and the menu, possibly 4 times per year. Mr. Heustis will talk with Contracts to better understand the reasons for lower evaluations due to menu versions.

B. CONCEPTUAL PROPOSAL ITEMS

OLD BUSINESS

(No items on this agenda)

NEW BUSINESS

1. Design Manual Revision – Minimize the number of overhead structures to support signage for two-way, left-turn lanes (TWLTO). 4

2. Indiana Design Manual – Chapter 52 6

3. Indiana Design Manual – Chapter 77 7

C. RECURRING SPECIAL PROVISIONS PROPOSED ITEMS

(No items on this agenda)

FINAL DRAFT MINUTES

D. STANDARD SPECIFICATIONS AND STANDARD DRAWINGS PROPOSED ITEMS

OLD BUSINESS

(No items on this agenda)

NEW BUSINESS

Item 08-16-1	Mr. Heustis	10
711.04	Certification of Fabricators	
Action:	Passed as revised	
Item 08-16-2	Mr. Heustis	13
Standard Drawing	801-TCDV-02	
Action:	Passed as submitted	
Item 08-16-3	Mr. Heustis	16
801.10.1	Construction Zone Energy Absorbing Terminal, CZ	
Action:	Passed as revised	
Item 08-16-4	Mr. Wright	18
Standard Drawings	802-SBTS-01 thru 19	
Action:	Withdrawn	
Item 08-16-5	Mr. Wright	42
910.19	Overhead Sign Structures	
910.19(a)	Aluminum Overhead Sign Structures, Box Truss and Bridge Attached	
910.19(b)	Steel Overhead Sign Structures, Box Truss, Cantilever, Monotube, and Bridge Attached	
Action:	Withdrawn	

FINAL DRAFT MINUTES

cc: Committee Members (11)
FHWA (2)

Mr. Wright
Date: 12/18/08

CONCEPTUAL PROPOSAL ITEM

1. Design Manual Revision – Minimize the number of overhead structures to support signage for two-way, left-turn lanes (TWLTO).

CONCEPTUAL

PROPOSAL TO STANDARDS COMMITTEE

PROBLEM(S) ENCOUNTERED: Cost Saving idea - Minimize the number of overhead structures to support signage for two-way, left-turn lanes (TWLTO).

PROPOSED SOLUTION: Revise the Design Manual for better guidance

APPLICABLE STANDARD SPECIFICATIONS: N/A

APPLICABLE STANDARD DRAWINGS: N/A

APPLICABLE DESIGN MANUAL SECTION: 75-3.07

APPLICABLE SECTION OF GIFE:N/A

Submitted By: John Wright

Title: Roadway Services Manager

Organization: INDOT

Phone Number: 232-5147

Date: 11/20/08

ACTION: Conceptual proposal was approved by the Committee with FHWA concurrence.

FINAL DRAFT MINUTES

75-3.06 Right-Turn Only Signs

When an exclusive right-turn only lane is provided, the use of an overhead sign should be considered where background clutter may be a problem. If background clutter is not a problem, ground-mounted signs may be as visible and more cost effective.

75-3.07 Two-Way Left-Turn Only (TWLTO) Signs

Overhead lane control signs should be provided at the beginning and end of the two-way, left-turn lanes and in urban areas approximately every 300 m in between. In suburban and built-up rural areas, the intermediate TWLTO sign spacing may be increased but normally not greater than 400 m. For the beginning and end, the supplementary words BEGIN and END should also be included. TWLTO signs should also be used on the back side of a LEFT TURN ONLY sign where a two-way, left-turn lane is transitioned into a one-way, left-turn lane. The supplementary BEGIN and END words are typically not included for this situation. Section 76-2.05(02) illustrates the pavement markings used for this transition.

The Department prefers to install these signs Ground Mounted only. If the Designer or District Traffic deems necessary, signs can be installed on an overhead structure.

~~The Department's preferred practice is to mount the overhead signs on cantilever supports, if feasible; if not, cable supports may be used. Supplemental post mounted signs are not necessary.~~

75-3.08 Do Not Pass Signs

The beginning of the no-passing zone is normally marked with a NO PASSING ZONE pennant on the left side of the roadway. The end of the zone is normally indicated with a sign post with three white delineators attached which is installed on the right side of the roadway. No-passing signs are not required at those zones marked because of railroad crossings, at most intersections or in urbanized areas.

75-3.09 Parking Signs

Mr. Andrewski
Date: 12/18/08

CONCEPTUAL PROPOSAL ITEM

2. Indiana Design Manual – Chapter 52

CONCEPTUAL

PROPOSAL TO STANDARDS COMMITTEE

PROBLEM(S) ENCOUNTERED: Indiana Design Manual Chapter 52 was in need of revisions to include the Mechanistic Empirical Pavement Design Guide, MEPDG and to incorporate various updates and revisions.

PROPOSED SOLUTION: David Andrewski, Manager, Office of Pavement Management, will brief the Standards Committee on the revised Indiana Design Manual Chapter 52 for informational purposes.

APPLICABLE STANDARD SPECIFICATIONS:

APPLICABLE STANDARD DRAWINGS: This will cause a change to spacing of D-1 joints and the Standard Drawings will need to be revised accordingly.

APPLICABLE DESIGN MANUAL SECTION: Chapter 52

APPLICABLE SECTION OF GIFE:

APPLICABLE RECURRING SPECIAL PROVISIONS:

Submitted By: David Andrewski, P.E.

Title: Manager, Office of Pavement Mgmt.

Organization: INDOT

Phone Number: 317-232-5452

Date: November 26, 2008

APPLICABLE SUB-COMMITTEE ENDORSEMENT?IDM Chapter 52 Revision Task Groups, Pavement Steering Committee

ACTION: The concept was approved conditionally by the Committee with the understanding that concerns by the Office of Pavement Preservation will be addressed, that FHWA concerns about a written implementation plan will be addressed, and that the final version will be reviewed and approved by the Executive staff. FHWA concurred with the conditional approval.

FINAL DRAFT MINUTES

Mr. Bowman
Date: 12/18/08

CONCEPTUAL PROPOSAL ITEM

3. Indiana Design Manual – Chapter 77

CONCEPTUAL

PROPOSAL TO STANDARDS COMMITTEE

PROBLEM(S) ENCOUNTERED: Indiana Design Manual Chapter 77 was in need of revisions to incorporate various updates and revisions.

PROPOSED SOLUTION: Greg Richards, Division of Traffic Control Systems, will brief the Standards Committee on the revised Indiana Design Manual Chapter 77 for informational purposes.

APPLICABLE STANDARD SPECIFICATIONS:

APPLICABLE STANDARD DRAWINGS:

APPLICABLE DESIGN MANUAL SECTION: Chapter 77

APPLICABLE SECTION OF GIFE:

APPLICABLE RECURRING SPECIAL PROVISIONS:

Submitted By: Carl Tuttle, P.E. (thru Mike Bowman)

Title: Manager, Traffic Engineering.

Organization: Division of Highway Operations

Phone Number: 317-233-4726

Date: November 26, 2008

APPLICABLE SUB-COMMITTEE ENDORSEMENT?

ACTION: The conceptual proposal was approved by the Committee with concurrence from the FHWA.

FINAL DRAFT MINUTES

Summary of Revisions to Chapter 77, *Traffic Signals*

1. **Chapter-wide Changes**
- Corrections for agency changes due to reorganization.
- General updating and removal of obsolete information.

2. **Definitions**
- Added items to the list and modified some definitions

3. **Signal Warrants**
- Changed to match warrants in 2003 MUTCD.

4. **Preemption**
- Updated requirements for railroad preemption.
- Added additional details regarding design of railroad preemption.

5. **Signal Display**
- Changed to specify LED signal indications.

6. **Signal Displays- Multiple & Supplemental heads**
- Multiple left turn lanes, one head per lane shall be provided
- Changed to recommend supplemental heads if 3 or more through lanes

7. **Signal Head Placement Figures**
- Additional example cases were added at districts' request.

8. **Signal Head Placement Distance**
- At least one and preferably both of the two signal faces required for the major movement on the approach shall be between 40' and 180' from the stop line.
- If the nearest signal head is located between 150 and 180' from the stop line, a near side head may be considered.

9. **Vision Cone**
- Changed from previous figure- shows vision cone from center of approach- including parking lane. Matches 2003 MUTCD.

10. **Pedestrian Indication Warrants**
- Reference standards in the 2003 MUTCD.

11. **Phase Numbering and Conventions**
- Standardized phase numbering and conventions.

12. **Lead/Lag Left Turns**
- INDOT's emphasis on retiming and maintaining coordinated systems has encouraged the use of lagging left turns where they promote progression through a signal system.

13. **Assignment of Right-of-Way**
- All-red flash.

14. **Phase Change Interval**
- Strengthened language for use of ITE clearance intervals- designers should use for analysis.
- Required for signal timings

15. **Indecision Zone**
- Revised definition and changed terminology from "dilemma zone" to "indecision zone"
- Type I Dilemma zone- caused by short clearance intervals- no longer an issue since ITE clearance intervals for amber and red are used.
- Indecision zone, or Type II Dilemma zone- caused by differences in driver behavior. When presented with a yellow indication, do they stop or go?
- Beginning of Indecision zone: distance from the stop line beyond which 90% of drivers would stop; end is a distance from the stop line where only 10% of all drivers would stop.

16. **Count Loops**
- Added design information for count loops

SPECIFICATION REVISIONS

PROPOSAL TO STANDARDS COMMITTEE

PROBLEM(S) ENCOUNTERED: Currently the 711.04 specification section includes a category of AISC certification that is no longer valid. Also there is some ambiguity regarding whether or not a fabricator needs to be certified.

PROPOSED SOLUTION: Modify the 711.04 section to update the categories of AISC certification to current AISC requirements

APPLICABLE STANDARD SPECIFICATIONS: 711.04

APPLICABLE STANDARD DRAWINGS: None

APPLICABLE DESIGN MANUAL SECTION: None

APPLICABLE SECTION OF GIFE: None

APPLICABLE RECURRING SPECIAL PROVISIONS: None

Submitted By: Ron Heustis (for Jim Reilman)

Title: Manager, Office of Construction Technical Support

Organization: INDOT

Phone Number: 317-234-2777

Date: December 9, 2008

APPLICABLE SUB-COMMITTEE ENDORSEMENT? None. Proposed changes believed to be editorial in nature.

FINAL DRAFT MINUTES

REVISION TO 2008 STANDARD SPECIFICATIONS

SECTION 711, BEGIN LINE 50, DELETE AND INSERT AS FOLLOWS:

711.04 Certification of Fabricators

The fabricator of structural steel furnished under this section shall be certified in accordance with the American Institute of Steel Construction *(AISC)* ~~and Quality C~~certification ~~P~~*p*rogram ~~(Category III) before the fabricator will be permitted to fabricate a welded plate girder~~. It shall be the fabricator's responsibility to maintain a valid certification and annual endorsements thereto.

Fabricators of main load-carrying components for multi-span bridges that have welded or bolted splices shall be certified under the AISC ~~M~~major ~~S~~steel ~~B~~bridges (CBR) category. Fabricators of fracture critical members shall be certified under the CBR category and shall have the fracture critical endorsement. Fabricators certified as CBR are also certified to fabricate simple and continuous rolled beam structures. Only fabricators meeting the above requirements shall be used to fabricate girders using high performance steel.

Fabricators of main load-carrying components for simple span bridges or bridges that do not have welded or bolted splices shall, as a minimum, be certified under the AISC ~~S~~simple ~~S~~steel ~~B~~bridges ~~S~~structures (SBR) category.

If the fabrication of secondary structural steel members and other miscellaneous structural steel components, such as but not limited to diaphragms, bearing assemblies, and miscellaneous plates does not involve any welding or heating of the steel, the fabrication facility that is fabricating these components will not be required to be AISC certified as described in this section.

~~Only fabricators meeting the requirements of the AISC Quality Certification Program, "Major Steel Bridges (Cbr)" with "Fracture Critical Members Endorsement (F)", or approved equal, may be used to fabricate girders using high performance steel.~~ Prior to approval for fabrication, the results of the latest AISC certification review shall be made available to the Engineer to determine if items critical to successful fabrication meet the needs of the specific work.

FINAL DRAFT MINUTES

REVISION TO 2008 STANDARD SPECIFICATIONS

SECTION 711, CONTINUED.

COMMITTEE COMMENTS:

Mr. Reilman passed out a one page handout with revisions to this item.

Other sections containing specific cross references:

None

Recurring Special Provisions affected:

None

Standard Sheets affected:

None

Motion: Mr. Heustis
Second: Mr. Beuchel
Ayes: 10
Nays: 0

Action: Passed as revised

_x_ 2010 Standard Specifications Book

___ Create RSP (No. _____)
Effective _____Letting
RSP Sunset Date: _____

___ Revise RSP (No. _____)
Effective _____Letting
RSP Sunset Date: _____

Standard Drawing Effective _____

___ Create RPD (No. _____)
Effective _____Letting
___ Technical Advisory

GIFE Update Req'd.? Y___ N_x__
By - Addition or Revision

Frequency Manual Update Req'd? Y___ N_x__
By - Addition or Revision

Received FHWA Approval? Yes

FINAL DRAFT MINUTES

SPECIFICATION REVISIONS

PROPOSAL TO STANDARDS COMMITTEE

PROBLEM(S) ENCOUNTERED: Based on questions arising on construction projects, there is a lack of clarity on the meaning of the word "adjacent" as it applies to standard drawing 801-TCDV-02, note no. 9, specifically regarding the requirement for a type C warning light.

PROPOSED SOLUTION: There is no such requirement in the MUTCD to use the type C light in the specified circumstance, the practice is rarely followed and the value of type C light has come into question by the 801/808 sub-committee. The proposal is to eliminate this requirement for the light and resultantly minimize the problem associated with the definition of “adjacent.”

APPLICABLE STANDARD SPECIFICATIONS: n/a

APPLICABLE STANDARD DRAWINGS: 801-TCDV-02

APPLICABLE DESIGN MANUAL SECTION: n/a

APPLICABLE SECTION OF GIFE: n/a

APPLICABLE RECURRING SPECIAL PROVISIONS: n/a

Submitted By: Joe Novak (thru Ron Heustis)

Title: Construction Field Engineer

Organization: INDOT, Div. of Construction Management

Phone Number: 317-232-5081

Date: 11/19/08

APPLICABLE SUB-COMMITTEE ENDORSEMENT? Yes, 801/808 on 9/5/08.

FINAL DRAFT MINUTES

Item No. 08-16-2
Mr. Heustis
Date: 12/18/08

REVISION TO STANDARD DRAWING

801-TCDV-02 Channelizing Devices

COMMITTEE COMMENTS:

Mr. Uremovich brought up that Notes 7 and 10 should probably be moved to the Standard Specifications. This will be addressed in a future revision.

Mr. Dirks brought up that FHWA has concerns about the use of the term "adjacent". This is not an issue that needs to be addressed immediately, but FHWA will be bringing this up in the future.

Other sections containing specific cross references:

None

Recurring Special Provisions affected:

None

Standard Sheets affected:

801-TCDV-02

Motion: Mr. Heustis
Second: Mr. Reilman
Ayes: 10
Nays: 0

Action: Passed as submitted

___ 20__ Standard Specifications Book

___ Create RSP (No. _____)
Effective _____Letting
RSP Sunset Date: _____

___ Revise RSP (No. _____)
Effective _____Letting
RSP Sunset Date: _____

Standard Drawing Effective Sept. 1, 2009

___ Create RPD (No. _____)
Effective _____Letting
___ Technical Advisory

GIFE Update Req'd.? Y___ N_x__
By - Addition or Revision

Frequency Manual Update Req'd? Y___ N_x__
By - Addition or Revision

Received FHWA Approval? Yes

FINAL DRAFT MINUTES

GENERAL NOTES

1. Unless otherwise specified, channelizing devices shall be spaced as shown on Standard Drawing E 801-TCLG-01.

(2) Reflectorized bands may be omitted from cones for lane closures during daylight hours.

(3) For vertical panels greater than 3 ft in height, the width of the stripes shall be 6 in.

(4) Vertical panels used on an expressway or a freeway shall have a minimum reflective panel area of 270 sq. in. Other roadways with a posted speed limit of 50 mph or greater shall have a minimum reflective panel area of 270 sq. in., also.

(5) Cones shall have a minimum height of 2'-4" when used at night.

(6) The maximum distance between the edges of adjacent reflective sheeting strips shall be 2 in.

7. Panel and direction indicator barricades and supports shall meet NCHRP 350 crash evaluation criteria.

(8) Minimum flexible tubular marker base area shall be 0.3 sq. ft.

(9) It is not necessary to delineate a drop-off of 3 in. or less adjacent to active travel lanes. Where channellizing devices are used to delineate drop-offs of 3 in. or less adjacent to active travel lanes, at least 33 in. of the device shall be above the adjoining pavement surface. Where channelizing devices are used to delineate a drop-off greater than 3 in. adjacent to active travel lanes, at least 27 in. of the device shall be above the adjoining pavement surface ~~and a Type C warning light shall be attached to the top of the device (on the pavement side).~~ In no case shall more than 9 in. of the device be below the adjoining pavement surface.

10. The proper orientation in respect to approaching vehicular traffic shall be maintained on vertical panels. Drums are the preferred channelizing device in a tight radius curve.

LEGEND

O - Device may be used in tangent set-ups.

X - Device may be used in taper or transition set-ups.

(X) - Devices may be used in two-way traffic set-ups to divide opposing lanes of traffic.

(●) - Device may be used to divide two or more lanes of traffic in the same direction.

(O) - Device may be used to replace barricades and drums where space is limited.

[O] - Device may be used to delineate edge of pavement drop-off where space is limited.

INDIANA DEPARTMENT OF TRANSPORTATION

CHANNELIZING DEVICES

SEPTEMBER 2005

STANDARD DRAWING NO. E 801-TCDV-02

RICHARD L. VANCLEAVE REGISTERED No. 9750 STATE OF INDIANA PROFESSIONAL ENGINEER

DESIGN STANDARDS ENGINEER

/s/ Richard L. VanCleave 9-01-05
DESIGN STANDARDS ENGINEER DATE

/s/ Richard K. Smutzer 9-01-05
CHIEF HIGHWAY ENGINEER DATE

SPECIFICATION REVISIONS

PROPOSAL TO STANDARDS COMMITTEE

PROBLEM(S) ENCOUNTERED: Std Spec 801.10.1 permits the use of the GREAT, cz unit manufactured by Energy Absorption Systems even though it is not NCHRP 350 compliant. This compliance requirement went into effect in 1998 for projects on the NHS. For economic reasons, INDOT has permitted the temporary continued use of this product but no expiration date has yet been established. It is believed that these units have not been commercially sold as new since 1998 and have been replaced by the QuadGuard product produced by the same manufacturer. Other states have already sunset the use of this product. It is estimated that only 40 units remain as usable in the state.

PROPOSED SOLUTION: Place an expiration date of 1/1/11 in the specifications. This should permit virtually any contract active prior to this change to complete and allow enough warning to allow contractors to prepare for the change.

APPLICABLE STANDARD SPECIFICATIONS: 801.10.1

APPLICABLE STANDARD DRAWINGS: n/a

APPLICABLE DESIGN MANUAL SECTION: n/a

APPLICABLE SECTION OF GIFE: n/a

APPLICABLE RECURRING SPECIAL PROVISIONS: n/a

Submitted By: Joe Novak (thru Ron Heustis)

Title: Construction Field Engineer

Organization: INDOT

Phone Number: 232-5081

Date: 11/3/08

APPLICABLE SUB-COMMITTEE ENDORSEMENT? Yes, 801/808 on 9/5/08 - Joe Novak, chair. It should be noted that ICA has requested an expiration date of 1/1/12 in order to coincide with the expiration of old temporary concrete barrier units; INDOT has preferred and chosen an expiration date of 1/1/11 since we are eager to use the safer product, believe that we are long overdue on an expiration date, and have no evidence this will be a hardship to the industry.

FINAL DRAFT MINUTES

Item No. 08-16-3
Mr. Heustis
Date: 12/18/08

REVISION TO 2008 STANDARD SPECIFICATIONS

SECTION 801, BEGIN LINE 479, INSERT AS FOLLOWS:

801.10.1 Construction Zone Energy Absorbing Terminal, CZ

The construction zone energy absorbing terminal, cz shall have passed NCHRP 350 level 3 crash test for all Interstate and other construction sites having a construction zone speed limit in excess of 45 mph and level 2 for non-Interstate construction sites having a construction zone speed limit of 45 mph or less. All energy absorbing terminal, cz shall have redirect capabilities and shall be approved by the FHWA. A copy of the crash test results and a copy of the FHWA approval letter shall be furnished to the Engineer prior to the installation of the unit. The Contractor may also use the Guard Rail Energy Absorbing Terminal cz, manufactured by Energy Absorption Systems, Inc. *until January 1, 2011. All units of this type in use ~~must~~ shall be replaced with a compliant product immediately after this date regardless of the date of letting. No additional payment ~~shall~~ will be made for this replacement.*

Other sections containing specific cross references:

None

Recurring Special Provisions affected:

None

Standard Sheets affected:

None

Motion: Mr. Heustis
Second: Mr. Andrewski
Ayes: 10
Nays: 0

Action: Passed as revised

_x_ 2010 Standard Specifications Book

_x_ Create RSP (No. 801-T-170)
Effective March 2009 Letting
RSP Sunset Date: _____

___ Revise RSP (No. _____)
Effective _____Letting
RSP Sunset Date: _____

Standard Drawing Effective _____

___ Create RPD (No. _____)
Effective _____Letting
___ Technical Advisory

GIFE Update Req'd.? Y___ N_x__
By - Addition or Revision

Frequency Manual Update Req'd? Y___ N_x__
By - Addition or Revision

Received FHWA Approval? Yes

FINAL DRAFT MINUTES

SPECIFICATION REVISIONS

PROPOSAL TO STANDARDS COMMITTEE

PROBLEM(S) ENCOUNTERED: Box Truss Standards need to be updated to conform to 2008 AASHTO fatique design changes.

PROPOSED SOLUTION: Revise Standard Drawings for Box Trusses

APPLICABLE STANDARD SPECIFICATIONS: 910.19, 910.20

APPLICABLE STANDARD DRAWINGS: 802-SBTS-01 to 19

APPLICABLE DESIGN MANUAL SECTION: N/A

APPLICABLE SECTION OF GIFE:N/A

Submitted By: John Wright

Title: Roadway Services Manager

Organization: INDOT

Phone Number: 232-5147

Date: 11/20/08

FINAL DRAFT MINUTES

Item No. 08-16-4
Mr. Wright
Date: 12/18/08

REVISION TO STANDARD DRAWINGS

802-SBTS Sign-01 Sign Box Truss Structure Plan and Elevation
802-SBTS Sign-02 Sign Box Truss Structure Table of Dimensions Spans 34’ thru 85’
802-SBTS Sign-03 Sign Box Truss Table of Dimensions Spans 86’ thru 130’
802-SBTS Sign-04 Sign Box Truss Structure Truss Schedule
802-SBTS Sign-05 Sign Box Truss Structure Isometric Views
802-SBTS Sign-06 Sign Box Truss Structure Connections and Weld Details
802-SBTS Sign-07 Sign Box Truss Structure Aluminum Chord Details
802-SBTS Sign-08 Sign Box Truss Structure End Support Details
802-SBTS Sign-09 Sign Box Truss Structure Truss Connection Details
802-SBTS Sign-10 Sign Box Truss Structure Truss Connection Details
802-SBTS Sign-11 Sign Box Truss Structure Steel End Support Handhole Details
802-SBTS Sign-12 Sign Box Truss Structure Steel End Support Base Details
802-SBTS Sign-13 Sign Box Truss Structure Steel End Support Base Details
802-SBTS Sign-14 Sign Box Truss Structure Interior Walkway Grating Plan
802-SBTS Sign-15 Sign Box Truss Structure Interior Walkway Grating Details
802-SBTS Sign-16 Sign Box Truss Structure Foundation at 33” Concrete Barrier Wall
802-SBTS Sign-17 Sign Box Truss Structure Foundation at 45” Concrete Barrier Wall
802-SBTS Sign-18 Sign Box Truss Structure Foundation at 36” Median or Shoulder
802-SBTS Sign-19 Sign Box Truss Structure Spread Footing Quantities

Other sections containing specific cross references:

None

Recurring Special Provisions affected:

None

Standard Sheets affected:

See Above

Motion: M
Second: M
Ayes:
Nays:

Action: Withdrawn

___ 20__ Standard Specifications Book

___ Create RSP (No. _____)
Effective _____Letting
RSP Sunset Date: _____

___ Revise RSP (No. _____)
Effective _____Letting
RSP Sunset Date: _____

Standard Drawing Effective _____

___ Create RPD (No. _____)
Effective _____Letting
___ Technical Advisory

GIFE Update Req’d.? Y___ N___
By - Addition or Revision

Frequency Manual Update Req’d? Y___ N___
By - Addition or Revision

Received FHWA Approval? ____

FINAL DRAFT MINUTES

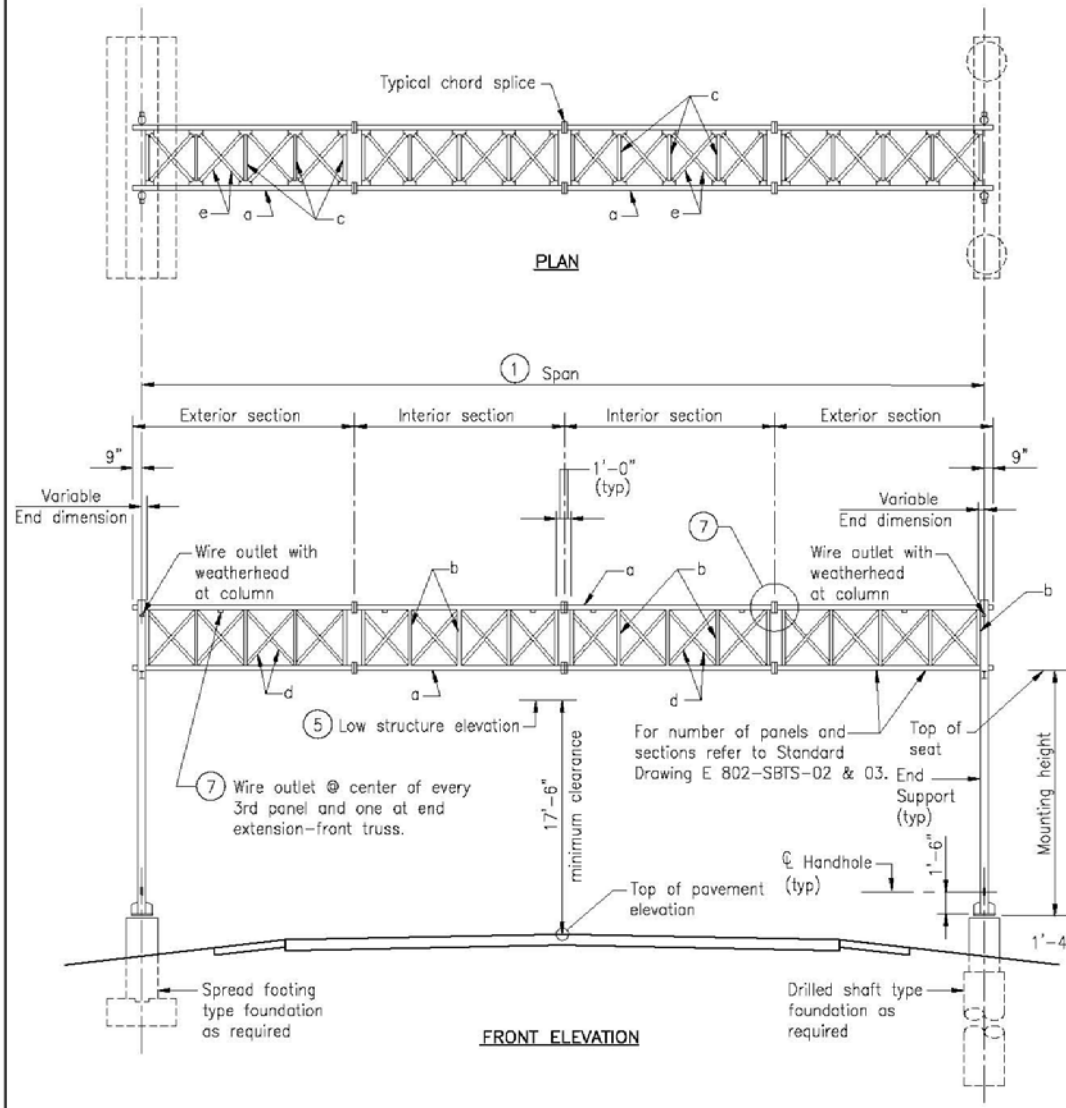

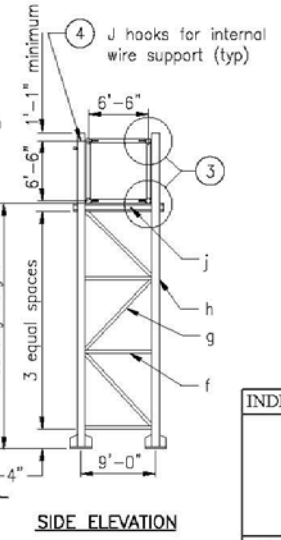

NOTES:

1. Sign box truss structures are for various maximum sign areas and span lengths. See Standard Drawings E 802-SBTS-02 thru 04 for structure schedule including dimensions and member sizes.
2. Maximum deviation of any chord from a straight line in any section shall be less than 1/8". Max. horizontal deviation over the entire length of the box truss shall be less than 3/8" from a straight line.
3. See Standard Drawings E 802-SBTS-05, 06, 09 and 10 for truss connection details.
4. See Standard Drawing E 802-SBTS-08 and 12 for end support details.
5. See Standard Drawing E 802-SNWW-01 through 03 for sign support and placement details.
6. All box truss members are aluminum and all end support members are steel.
7. See Standard Drawing E 802-SBTS-07 for chord flange and wire outlet details.

LEGEND:

- a – Chord
- b – Verticals in front and back faces of box truss
- c – Horizontals in top and bottom faces of box truss
- d – Diagonals in front and back faces of box truss
- e – Diagonals in top and bottom faces of box truss
- f – Horizontals in End Supports
- g – Diagonals in End Supports
- h – End Support columns
- j – Horizontal W-beam in End Support

INDIANA DEPARTMENT OF TRANSPORTATION

SIGN BOX TRUSS STRUCTURE PLAN AND ELEVATION

OCTOBER 2008

DRAWING NO. E 802-SBTS-01

JOHN C. MAURER REGISTERED No. 17361 STATE OF INDIANA PROFESSIONAL ENGINEER

John C. Maurer 07/18/08
DESIGN ENGINEER DATE

DESIGNED: JCM DRAWN:

DIMENSIONS FOR SIGN BOX TRUSSES (34' thru 85')

SPAN	EXTERIOR SECTIONS					INTERIOR SECTIONS			
SPAN-TRUSS LENGTH, (FT)	NO. OF EXT. SEC.	NO. OF EXT. PANELS PER SEC.	VARIABLE END DIMEN.	PANEL LENGTH	SECTION LENGTH	NO. OF INT. SECTIONS	NO. OF PANELS PER SECTION	PANEL LENGTH	SECTION LENGTH
34	1	6	6"	5'-5"	35'-6"	0			
35	1	6	6"	5'-8"	36'-6"	0			
36	2	3	6"	5'-5"	18'-9"	0			
37	2	3	6"	5'-8"	19'-3"	0			
38	2	3	6"	5'-10"	19'-9"	0			
39	2	3	6"	6'	20'-3"	0			
40	2	3	6"	6'-2"	20'-9"	0			
41	2	3	6"	6'-4"	21'-3"	0			
42	2	3	6"	6'-6"	21'-9"	0			
43	2	4	6"	5'	22'-3"	0			
44	2	4	6"	5'-1 1/2"	22'-9"	0			
45	2	4	6"	5'-3"	23'-3"	0			
46	2	4	6"	5'-4 1/2"	23'-9"	0			
47	2	4	6"	5'-5"	24'-3"	0			
48	2	4	6"	5'-7 1/2"	24'-9"	0			
49	2	4	6"	5'-9"	25'-3"	0			
50	2	4	6"	5'-10 1/2"	25'-9"	0			
51	2	4	6"	6'	26'-3"	0			
52	2	4	6"	6'-1 1/2"	26'-9"	0			
53	2	4	6"	6'-3"	27'-3"	0			
54	2	4	6"	6'-4 1/2"	27'-9"	0			
55	2	4	6"	6'-6"	28'-3"	0			
56	2	5	5 1/4"	5'-3 3/4"	28'-9"	0			
57	2	5	6 1/4"	5'-4 3/4"	29'-3"	0			
58	2	5	6"	5'-5"	29'-9"	0			
59	2	5	5 3/4"	5'-7 1/4"	30'-3"	0			
60	2	5	5 1/2"	5'- 8 1/2"	30'-9"	0			
61	2	5	6 1/2"	5'-9 1/2"	31'-3"	0			
62	2	5	6 1/4"	5'-10 3/4"	31'-9"	0			
63	2	5	6"	6'	32'-3"	0			
64	2	5	5 3/4"	6'-1 1/4"	32'-9"	0			
65	2	5	5 1/2"	6'-2 1/2"	33'-3"	0			
66	2	5	5 1/4"	6'-3 3/4"	33'-9"	0			
67	2	5	5"	6'-5"	34'-3"	0			
68	2	5	6"	6'-6"	34'-9"	0			
69	2	4	6"	5'-4"	23'-7"	1	4	5'-4"	23'-4"
70	2	4	6"	5'-5"	23'-11"	1	4	5'-5"	23'-8"
71	2	4	6"	5'-6"	24'-3"	1	4	5'-6"	24'
72	2	4	6"	5'-7"	24'-7"	1	4	5'-7"	24'-4"
73	2	4	6"	5'-8"	24'-11"	1	4	5'-8"	24'-8"
74	2	4	6"	5"-9"	25'-3"	1	4	5"-9"	25'
75	2	4	6"	5'-10"	25'-7"	1	4	5'-10"	25'-4"
76	2	4	6"	5'-11"	25'-11"	1	4	5'-11"	25'-8"
77	2	4	6"	6'	26'-3"	1	4	6'	26'
78	2	4	6"	6'-1 "	26'-7"	1	4	6'-1 "	26'-4"
79	2	4	6"	6'-2"	26'-11"	1	4	6'-2"	26'-8"
80	2	4	6"	6'-3"	27'-3"	1	4	6'-3"	27'
81	2	4	6"	6'-4"	27'-7"	1	4	6'-4"	27'-4"
82	2	4	6"	6'-5"	27'-11"	1	4	6'-5"	27'-8"
83	2	4	6"	6'-6"	28'-3"	1	4	6'-6"	28'
84	2	5	5 3/4"	5'-7 3/4"	30'-5 1/2"	1	4	5'-7 3/4"	24'-7"
85	2	5	6 1/2"	5'-8 1/2"	30'-10"	1	4	5'-8 1/2"	24'-10"

NOTES:

1. The table of dimensions for sign box trusses is divided and put on two Standard Drawings. The tables shows dimensions with all section requirements accounted for. For span lengths of 86' thru 130' see Standard Drawing E 802-SBTS-03.
2. All panels on a truss shall be the same length. The minimum panel length for all trusses is 5'-0" and the maximum is 6'-6".
3. A single interior unit in a truss shall have an even number of panels to maintain the pattern of the vertical diagonals.
4. Use minimum number of sections for each truss. Keep the maximum section length at 35'-6".
5. See Standard Drawing E 802-SBTS-03 for required camber.

INDIANA DEPARTMENT OF TRANSPORTATION

SIGN BOX TRUSS STRUCTURE
TABLE OF DIMENSIONS
SPANS 34' thru 85'

OCTOBER 2008

DRAWING NO. E 802-SBTS-02

JOHN C. MAUSER REGISTERED No. 17361 STATE OF INDIANA PROFESSIONAL ENGINEER

John C. Mauser 07/18/08
DESIGN ENGINEER DATE

DESIGNED: JCM DRAWN:

DIMENSIONS FOR SIGN BOX TRUSSES (86' thru 130')

SPAN	EXTERIOR SECTIONS					INTERIOR SECTIONS			
SPAN-TRUSS LENGTH, (FT)	NO. OF EXT. SEC.	NO. OF EXT. PANELS PER SEC.	VARIABLE END DIMEN.	PANEL LENGTH	SECTION LENGTH	NO. OF INT. SECTIONS	NO. OF PANELS PER SECTION	PANEL LENGTH	SECTION LENGTH
86	2	5	5 1/2"	5'-9 1/2"	31'-2"	1	4	5'-9 1/2"	25'-2"
87	2	5	6 1/4"	5'-10 1/4"	31'-6 1/2"	1	4	5'-10 1/4"	25'-5"
88	2	5	7"	5'-11"	31'-11"	1	4	5'-11"	25'-8"
89	2	5	6"	6'	32'-3"	1	4	6'	26'
90	2	5	5"	6'-1"	32'-7"	1	4	6'-1"	26'-4"
91	2	5	5 3/4"	6'-1 3/4"	32'-11 1/2"	1	4	6'-1 3/4"	26'-7"
92	2	5	6 1/2"	6'-2 1/2"	33'-4"	1	4	6'-2 1/2"	26'-10"
93	2	5	5 1/2"	6'-3 1/2"	33'-8"	1	4	6'-3 1/2"	27'-2"
94	2	5	6 1/4"	6'-4 1/4"	34'-1/2"	1	4	6'-4 1/4"	27'-5"
95	2	5	5 1/4"	6'-5 1/4"	34'-4 1/2"	1	4	6'-5 1/4"	27'-9"
96	2	5	6"	6'-6"	34'-9"	1	4	6'-6"	28'
97	2	4	6"	5'-7 1/2"	24'-9"	2	4	5'-7 1/2"	24'-6"
98	2	4	6"	5'-8 1/4"	25'	2	4	5'-8 1/4"	24'-9"
99	2	4	6"	5'-9"	25'-3"	2	4	5'-9"	25'
100	2	4	6"	5'-9 3/4"	25'-6"	2	4	5'-9 3/4"	25'-3"
101	2	4	6"	5'-10 1/2"	25'-9"	2	4	5'-10 1/2"	25'-6"
102	2	4	6"	5'-11 1/4"	26'	2	4	5'-11 1/4"	25'-9"
103	2	4	6"	6'	26'-3"	2	4	6'	26'
104	2	4	6"	6'-3/4"	26'-6"	2	4	6'-3/4"	26'-3"
105	2	4	6"	6'-1 1/2"	26'-9"	2	4	6'-1 1/2"	26'-6"
106	2	4	6"	6'-2 1/4"	27'	2	4	6'-2 1/4"	26'-9"
107	2	4	6"	6'-3"	27'-3"	2	4	6'-3"	27'
108	2	4	6"	6'-3 3/4"	27'-6"	2	4	6'-3 3/4"	27'-3"
109	2	4	6"	6'-4 1/2"	27'-9"	2	4	6'-4 1/2"	27'-6"
110	2	4	6"	6'-5 1/4"	28'	2	4	6'-5 1/4"	27'-9"
111	2	4	6"	6'-6"	28'-3"	2	4	6'-6"	28'
112	2	5	6"	5'-3"	28'-6"	2	5	5'-3"	28'-3"
113	2	5	7"	5'-3 1/2"	28'-9 1/2"	2	5	5'-3 1/2"	28'-5 1/2"
114	2	5	5 1/2"	5'-4 1/4"	28'-11 3/4"	2	5	5'-4 1/4"	28'-9 1/4"
115	2	5	6 1/2"	5'-4 3/4"	29'-3 1/4"	2	5	5'-4 3/4"	28'-11 3/4"
116	2	5	5"	5'-5 1/2"	29'-5 1/2"	2	5	5'-5 1/2"	29'-3 1/2"
117	2	5	6"	5'-6"	29'-9"	2	5	5'-6"	29'-6"
118	2	5	5"	5'-6 1/2"	29'-10 1/2"	2	5	5'-6 1/2"	29'-8 1/2"
119	2	5	5 1/2"	5'-7 1/4"	30'-2 3/4"	2	5	5'-7 1/4"	30'-1/4"
120	2	5	6 1/2"	5'-7 3/4"	30'-6 1/4"	2	5	5'-7 3/4"	30'-2 3/4"
121	2	5	5"	5'-8 1/2"	30'-8 1/2"	2	5	5'-8 1/2"	30'-6 1/2"
122	2	5	6"	5'-9"	31'	2	5	5'-9"	30'-9"
123	2	5	7"	5'-9 1/2"	31'-3 1/2"	2	5	5'-9 1/2"	30'-11 1/2"
124	2	5	5 1/2"	5'-10 1/4"	31'-5 3/4"	2	5	5'-10 1/4"	31'-3 1/4"
125	2	5	6 1/2"	5'-10 3/4"	31'-9 1/4"	2	5	5'-10 3/4"	31'-5 3/4"
126	2	5	5"	5'-11 1/2"	31' -11 1/2"	2	5	5'-11 1/2"	31'-9 1/2"
127	2	5	6"	6'	32'-3"	2	5	6'	32'
128	2	5	7"	6'-1/2"	32'-6 1/2"	2	5	6'-1/2"	32'-2 1/2"
129	2	5	5 1/2"	6'-1 1/4"	32'-8 3/4"	2	5	6'-1 1/4"	32'-6 1/4"
130	2	5	6 1/2"	6'-1 3/4"	33'-1/4"	2	5	6'-1 3/4"	32'-8 3/4"

NOTES:

1. Camber diagrams to build trusses with 2 to 4 sections are shown. Use 1 ½" camber at midspan for all truss spans of 36' through 100' and 3" for all truss spans of 101' through 130'. Camber is not required for spans less than 36'. Camber shown is for fabrication only measured with truss fully supported, no load condition.
2. See Standard Drawing E 802-BSTS-02 for truss spans of 34' to 85' and other notes.
3. Allowable camber tolerance for truss is 25% of specified camber value.

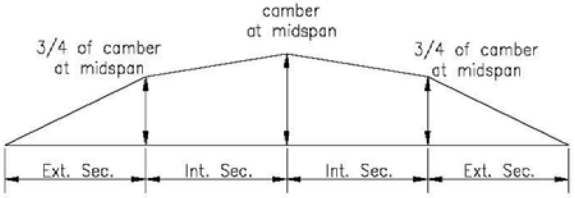

CAMBER DIAGRAM (4 Section Truss)

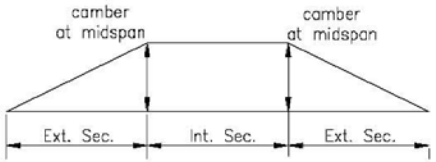

CAMBER DIAGRAM (3 Section Truss)

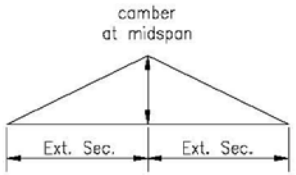

CAMBER DIAGRAM (2 Section Truss)

INDIANA DEPARTMENT OF TRANSPORTATION

SIGN BOX TRUSS STRUCTURE
TABLE OF DIMENSIONS
SPANS 86' thru 130'

OCTOBER 2008

DRAWING NO. E 802-SBTS-03

JOHN C. MAUSER REGISTERED No. 17361 STATE OF INDIANA PROFESSIONAL ENGINEER

John C. Mauser 07/18/08
DESIGN ENGINEER DATE

DESIGNED: JCM DRAWN:

SIGN BOX TRUSS SCHEDULE

TRUSS TYPE	MAX. SIGN AREA	MAX. SPAN	MAX. MOUNTING HEIGHT	TRUSS MEMBERS										END SUPPORT MEMBERS						
				CHORD		VERTICAL		HORIZONTAL		VERTICAL DIAGONAL		HORIZONTAL DIAGONAL		HORIZONTAL		DIAGONAL		COLUMN		W-BEAM
			H	a		b		c		d		e		f		g		h		j
				DIA.	THK	DIA.	THK	DIA.	THK	DIA.	THK	DIA.	THK	DIA.	THK	DIA.	THK	DIA.	THK	
	SQ. FT.	FT.	FT.	IN.	IN.	IN.	IN.	IN.	IN.	IN.	IN.	IN.	IN.	IN.	IN.	IN.	IN.	IN.	IN.	
A	500	130	28' - 6"	6.00	0.250	2.50	0.250	2.50	0.188	3.00	0.375	4.00	0.375	2.00	0.220	5.00	0.375	14.00	0.500	W 8 x 58
B	700	100	28' - 6"	6.50	0.375	2.50	0.188	2.00	0.188	3.00	0.500	4.00	0.375	2.00	0.220	7.00	0.375	14.00	0.500	
C		130	28' - 6"	7.00	0.375	2.50	0.250	2.50	0.188	3.00	0.500	4.00	0.500	2.00	0.220	8.00	0.500	14.00	0.593	
D	900	100	28' - 6"	7.00	0.375	2.50	0.250	2.50	0.188	3.00	0.500	4.00	0.500	2.00	0.220	8.00	0.500	18.00	0.500	
E		130	28' - 6"	7.00	0.500	2.50	0.250	2.50	0.25	3.00	0.500	4.00	0.500	2.00	0.220	8.00	0.593	18.00	0.562	W 10 x 68

NOTES:

1. For dimensions and members locations see Standard Drawings E 802-SBTS-01 thru 03.
2. Material: Box Truss: Aluminum
   End Supports: Steel
3. For base plate and anchor bolt details see Standard Drawings E 802-SBTS-12 & 13.
4. See Standard Drawing E 802-SBTS-03 for camber diagram.
5. See Standard Drawing E 802-SBTS-16 thru 19 for foundation details.

INDIANA DEPARTMENT OF TRANSPORTATION

SIGN BOX TRUSS STRUCTURE
TRUSS SCHEDULE

OCTOBER 2008

DRAWING NO. E 802-SBTS-04

JOHN C. MAUSER REGISTERED No. 17361 STATE OF INDIANA PROFESSIONAL ENGINEER

John C. Mauser 07/18/08
DESIGN ENGINEER DATE

DESIGNED: JCM DRAWN:

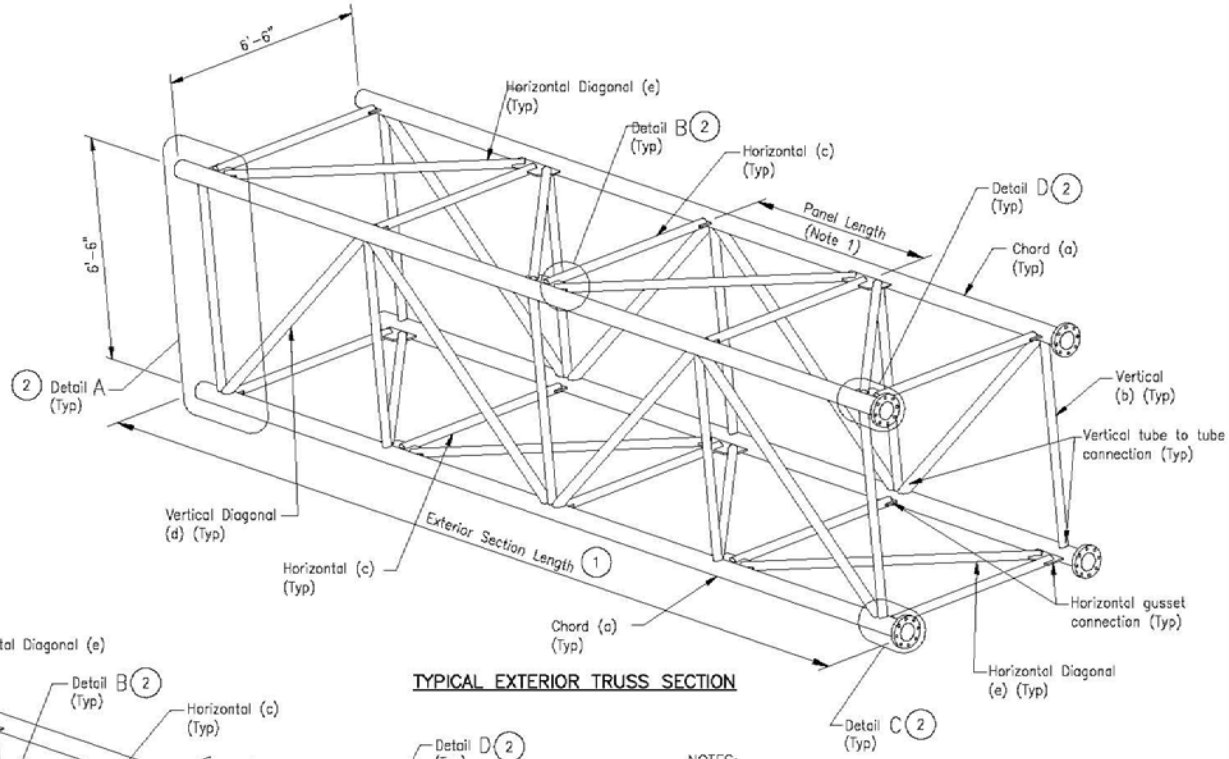

TYPICAL EXTERIOR TRUSS SECTION

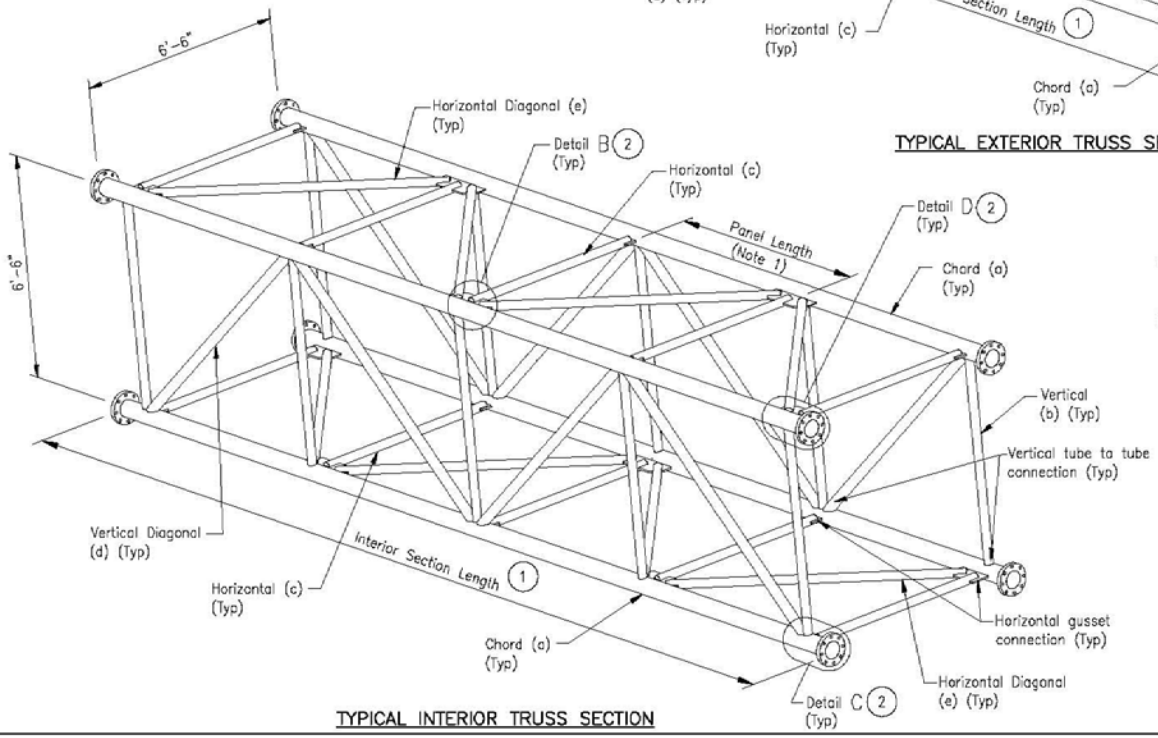

TYPICAL INTERIOR TRUSS SECTION

NOTES:

(1) Number of panels and sections varies. See Standard Drawing E 802-SBTS-02 and 03 for table of dimensions.

(2) For Details A thru D see Standard Drawing E 802-SBTS-06

INDIANA DEPARTMENT OF TRANSPORTATION

SIGN BOX TRUSS STRUCTURE ISOMETRIC VIEWS

OCTOBER 2008

DRAWING NO. E 802-SBTS-05

JOHN C. MAUSER REGISTERED No. 17361 STATE OF INDIANA PROFESSIONAL ENGINEER

John C. Mauser 07/18/08
DESIGN ENGINEER DATE

DESIGNED: JCM DRAWN:

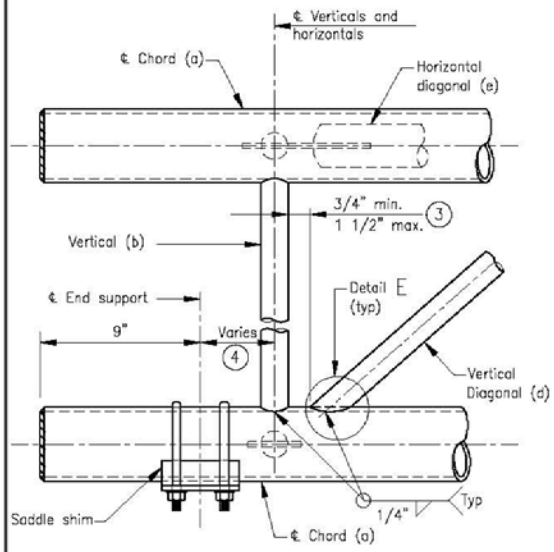

DETAIL A
EXTERIOR SECTION AT END SUPPORT

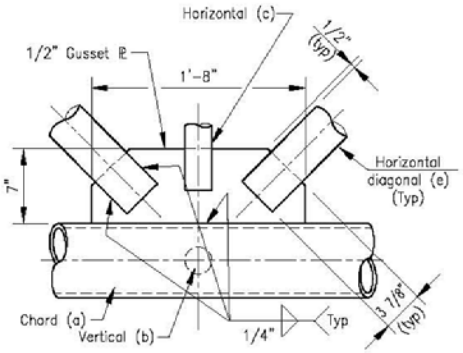

DETAIL B (PLAN VIEW)
TYPICAL PANEL CONNECTION

NOTES:

1. All verticals and vertical diagonals shall be machined to provide a snug tube to tube fit to the chord along the entire edge before welding. Horizontals and horizontal diagonals shall be slotted for the dimension shown and welded to gussets. They shall be completely sealed against water penetration. See Typical Gusset Connection Detail.
2. See Standard Drawing E 802-SBTS-04 for schedule of truss members.

(3) Vertical diagonals shall be detailed for minimum offset from the panel point based on the following: Offset shall be such as to provide a 3/4" minimum to 1 1/2" maximum clearance between any diagonal and any vertical.

(4) For variable end dimension, see tables on Standard Drawings E 802-SBTS-02 & 03.

(5) End plate may be welded as one piece and then slotted or welded as two pieces after slotting the member.

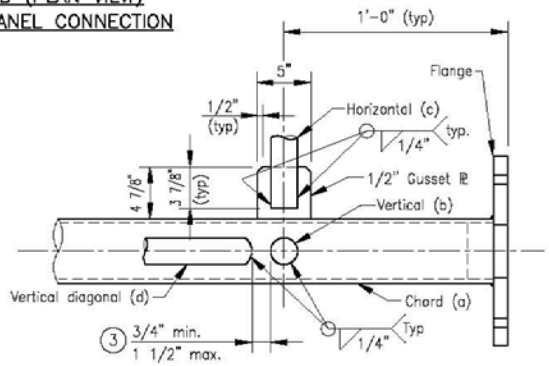

DETAIL C PLAN VIEW
BOTTOM CHORD AT FLANGE CONNECTION

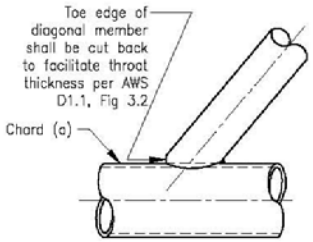

TOE EDGE – DETAIL E

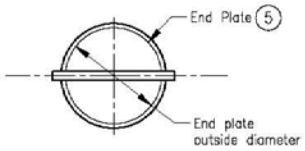

SECTION A–A

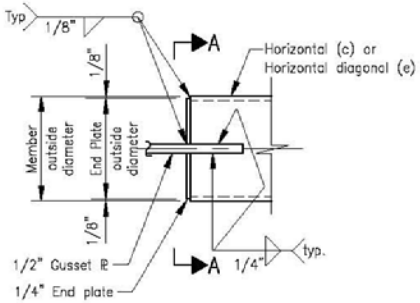

ELEVATION VIEW
TYPICAL GUSSET CONNECTION DETAIL

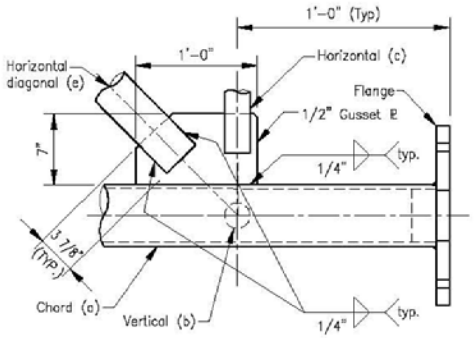

DETAIL D (PLAN VIEW)
TOP CHORD AT FLANGE CONNECTION

INDIANA DEPARTMENT OF TRANSPORTATION

SIGN BOX TRUSS STRUCTURE CONNECTIONS AND WELD DETAILS

OCTOBER 2008

DRAWING NO. E 802-SBTS-06

JOHN C. MAUSER REGISTERED No. 17361 STATE OF INDIANA PROFESSIONAL ENGINEER

John C. Mauser 07/18/08
DESIGN ENGINEER DATE

DESIGNED: JCM DRAWN:

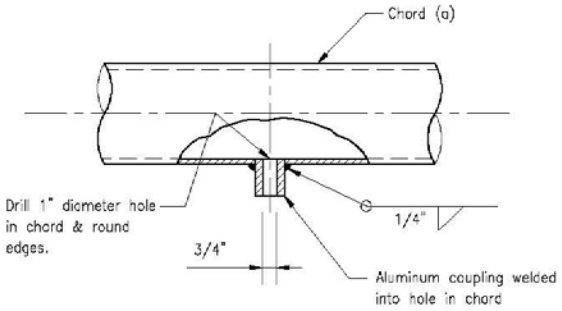

WIRE OUTLET DETAIL

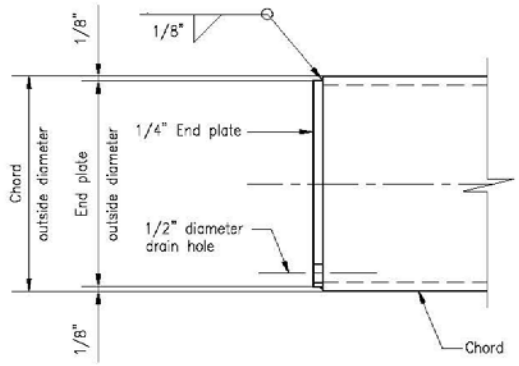

SECTION A–A

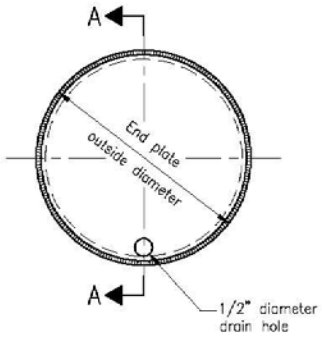

END VIEW

ALUMINUM CHORD END DETAILS

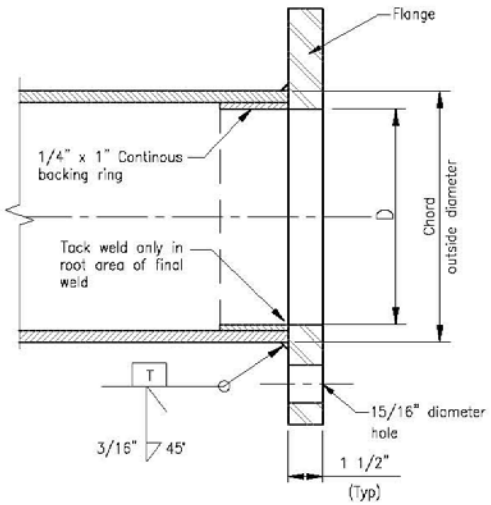

SECTION B–B

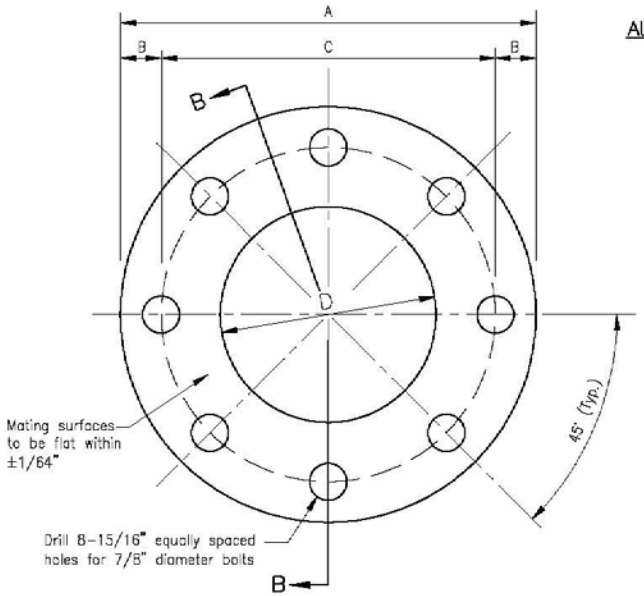

FLANGE DETAILS

NOTES:

1. See Standard Drawing E 802–SBTS–01 for chord splice locations and wire outlets.
2. Plates shall be machined from solid rounds.
3. Mating surfaces to be flat within ± 1/64". Flange shall be given additional finish if necessary to ensure contact between plates.

TABLE OF FLANGE DIMENSIONS					
TRUSS CHORD Outside Diameter	BOLT SIZE	DIMENSION (INCHES)			
		A	B	C	D
6" x 1/4"	7/8"	11"	1"	9"	5"
6 1/2" x 3/8"	7/8"	12"	1"	10"	5 1/4"
7" x 3/8"	7/8"	12"	1"	10"	5 3/4"
7" x 1/2"	7/8"	12"	1"	10"	5 1/2"

INDIANA DEPARTMENT OF TRANSPORTATION

SIGN BOX TRUSS STRUCTURE
ALUMINUM CHORD DETAILS

OCTOBER 2008

DRAWING NO. E 802–SBTS–07

JOHN C. MAUSER REGISTERED No. 17361 STATE OF INDIANA PROFESSIONAL ENGINEER

John C. Mauser 07/18/08
DESIGN ENGINEER DATE

DESIGNED: JCM DRAWN:

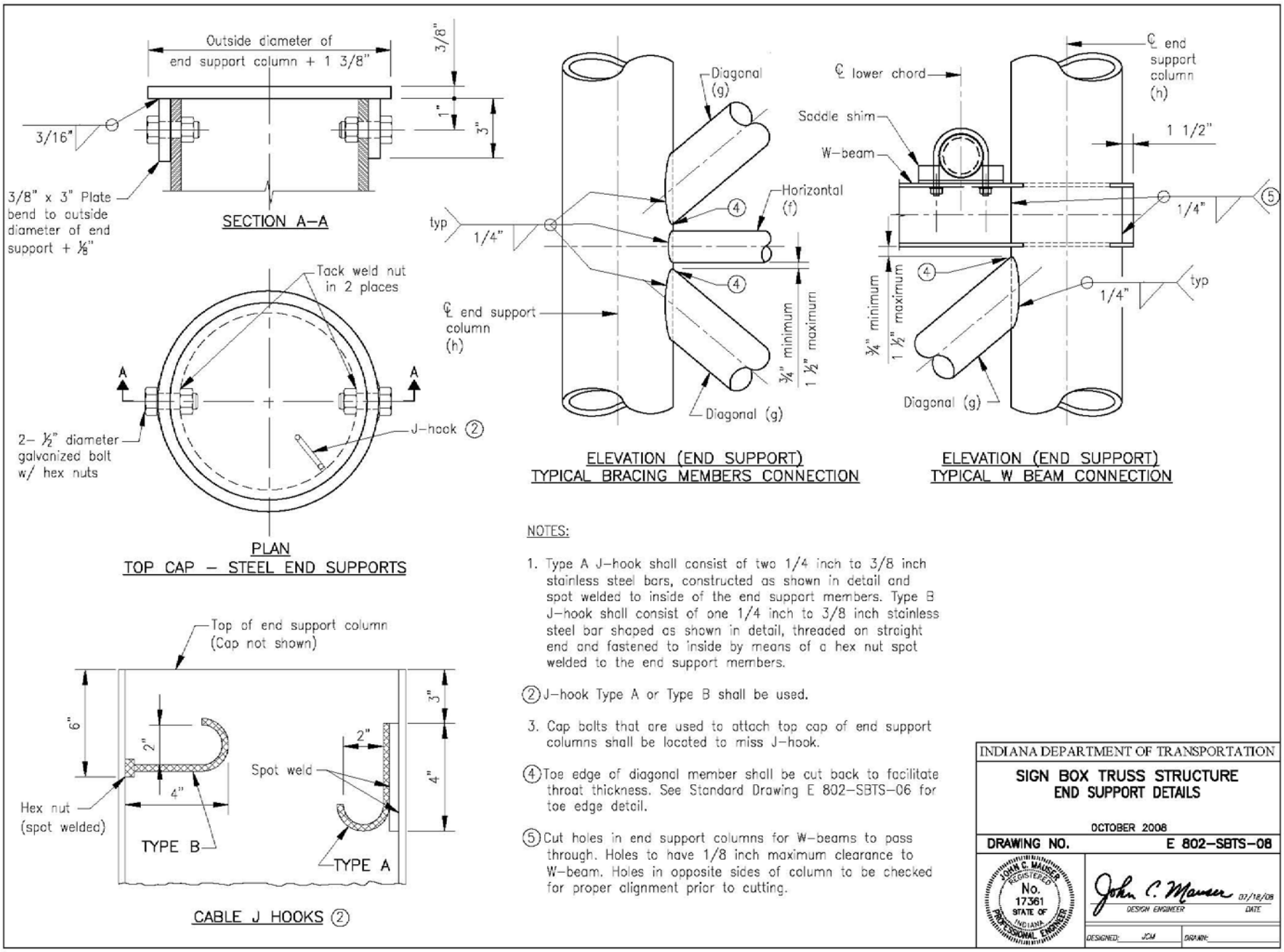

NOTES:

1. Type A J–hook shall consist of two 1/4 inch to 3/8 inch stainless steel bars, constructed as shown in detail and spot welded to inside of the end support members. Type B J–hook shall consist of one 1/4 inch to 3/8 inch stainless steel bar shaped as shown in detail, threaded on straight end and fastened to inside by means of a hex nut spot welded to the end support members.

② J–hook Type A or Type B shall be used.

3. Cap bolts that are used to attach top cap of end support columns shall be located to miss J–hook.

④ Toe edge of diagonal member shall be cut back to facilitate throat thickness. See Standard Drawing E 802–SBTS–06 for toe edge detail.

⑤ Cut holes in end support columns for W–beams to pass through. Holes to have 1/8 inch maximum clearance to W–beam. Holes in opposite sides of column to be checked for proper alignment prior to cutting.

INDIANA DEPARTMENT OF TRANSPORTATION

SIGN BOX TRUSS STRUCTURE
END SUPPORT DETAILS

OCTOBER 2008

DRAWING NO. E 802–SBTS–08

JOHN C. MAUSER REGISTERED No. 17361 STATE OF INDIANA PROFESSIONAL ENGINEER

John C. Mauser 07/18/08
DESIGN ENGINEER DATE

DESIGNED: JCM DRAWN:

TABLE 1 - SPACER ASSEMBLY DIMENSIONS

TRUSS TYPE	END SUPPORT COLUMN (h) SIZE (O.D.)	Z	D	L
	IN	IN.	IN.	IN.
A	14	4 1/2	6 1/16	24.0
B	14	4 1/4	6 9/16	24.0
C	14	4	7 1/16	24.0
D	18	2	7 1/16	26.0
E	18	2	7 1/16	26.0

NOTES:

1. Provide isolation from steel dissimilar metal as required.
2. For truss type D and E the 1" stem plate is not required. Fillet weld front and rear plates together.

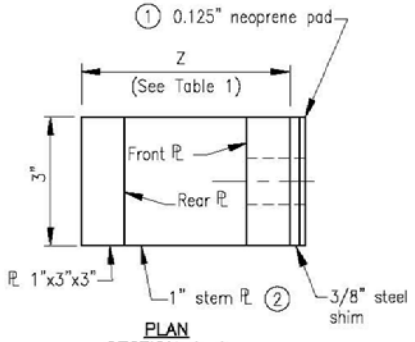

PLAN
SECTION A–A

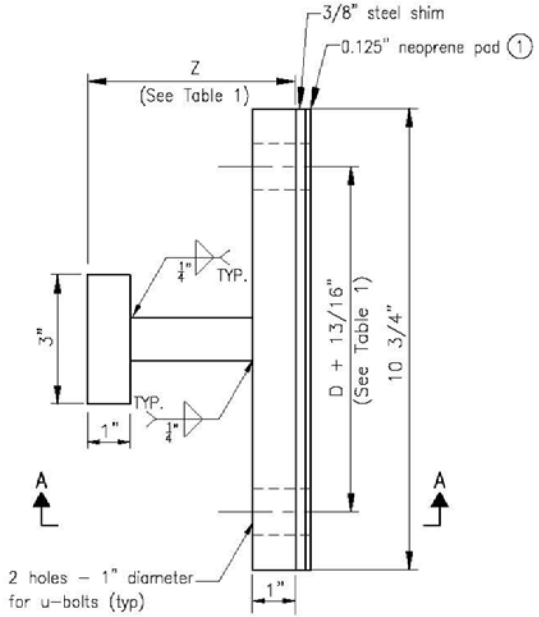

ELEVATION
END SUPPORT SPACER ASSEMBLY DETAIL

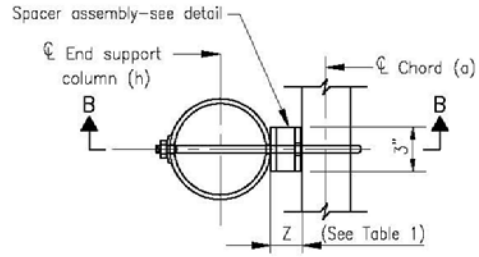

PLAN

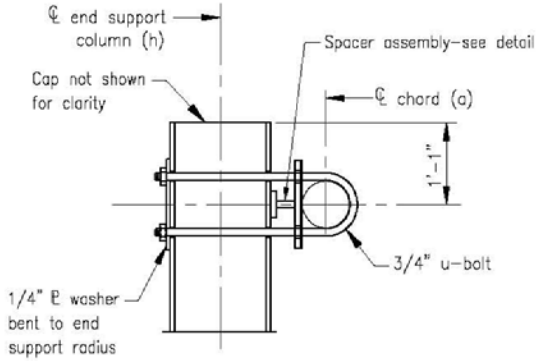

SECTION B–B
UPPER CHORD CONNECTION DETAILS

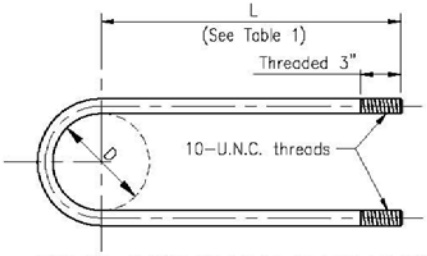

3/4" DIA. STAINLESS STEEL U–BOLT DETAIL

INDIANA DEPARTMENT OF TRANSPORTATION

SIGN BOX TRUSS STRUCTURE
TRUSS CONNECTION DETAILS

OCTOBER 2008

DRAWING NO. E 802–SBTS–09

JOHN C. MAUSER REGISTERED No. 17361 STATE OF INDIANA PROFESSIONAL ENGINEER

John C. Mauser 07/18/08
DESIGN ENGINEER DATE

DESIGNED: JCM DRAWN:

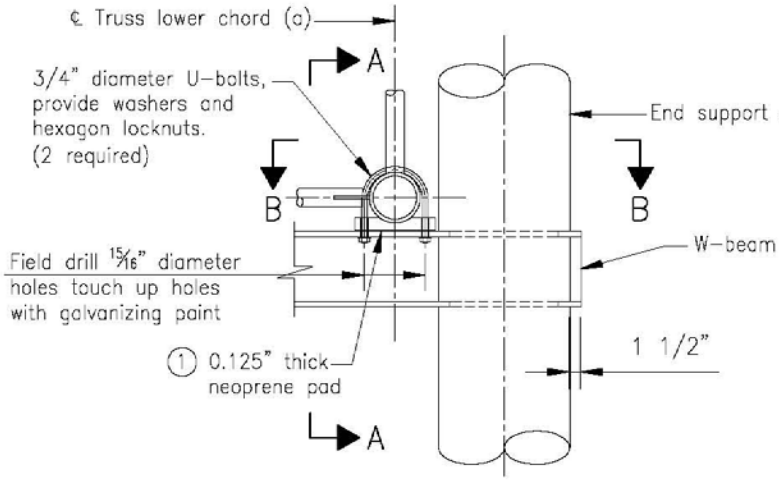

DETAIL A

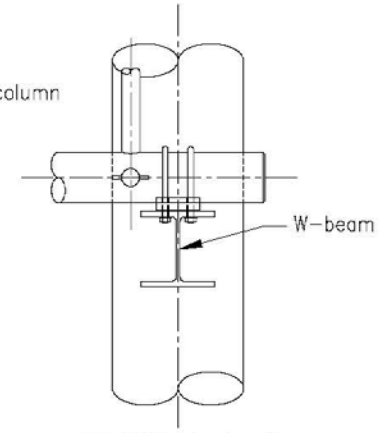

SECTION A–A

NOTES:

1 Provide neoprene pads at all chord to W-beam bearing surfaces.

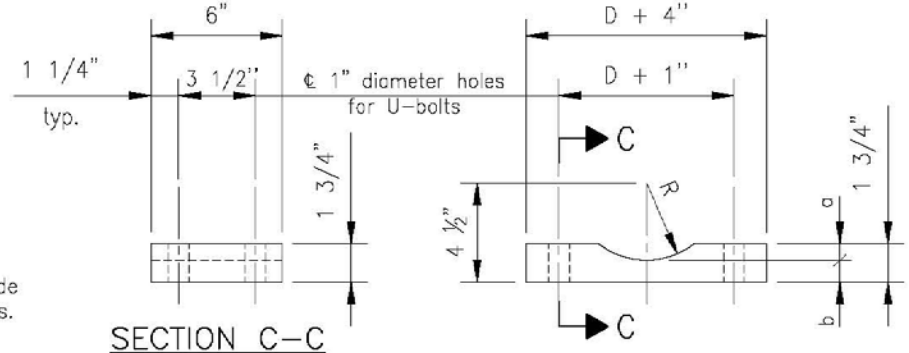

SECTION C–C

$R = D/2 + 1/32"$

D = Outside diameter of chord.

SADDLE SHIM DETAIL

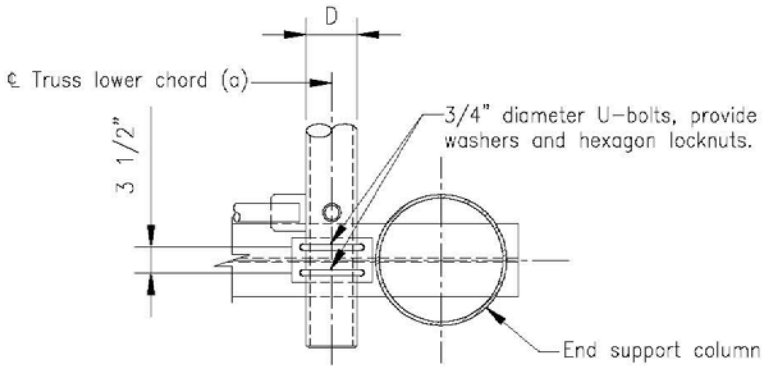

SECTION B–B
LOWER CHORD CONNECTION DETAIL

Truss Chord Outside Diameter D	a	b
6"	9/32"	1 15/32"
6 1/2"	17/32"	1 7/32"
7"	25/32"	31/32"

INDIANA DEPARTMENT OF TRANSPORTATION

SIGN BOX TRUSS STRUCTURE
TRUSS CONNECTION DETAILS

OCTOBER 2008

DRAWING NO. E 802-SBTS-10

JOHN C. MAUSER REGISTERED No. 17361 STATE OF INDIANA PROFESSIONAL ENGINEER

John C. Mauser 07/18/08
DESIGN ENGINEER DATE

DESIGNED: JCM DRAWN: REM

NOTES:

1. In lieu of fabricated handhole frame as shown, frame may be cut from 2" plate (rolling direction vertical).
2. See Standard Drawing E 802-SNWR-03 for grounding post details. Grounding post to be placed on far side of support directly opposite center of handhole.
3. See Standard Drawing E 802-SBTS-12 for handhole locations.

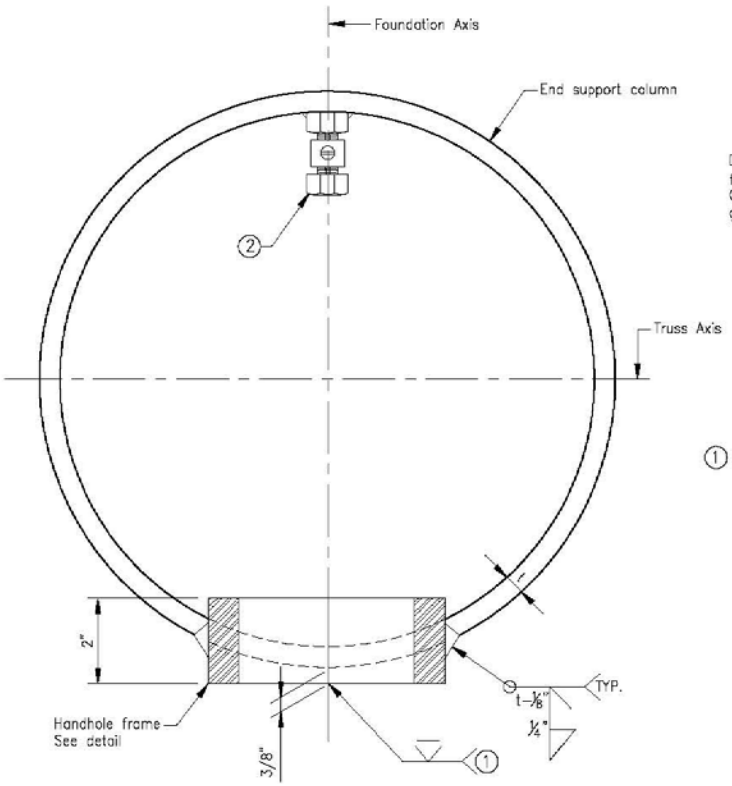

PLAN

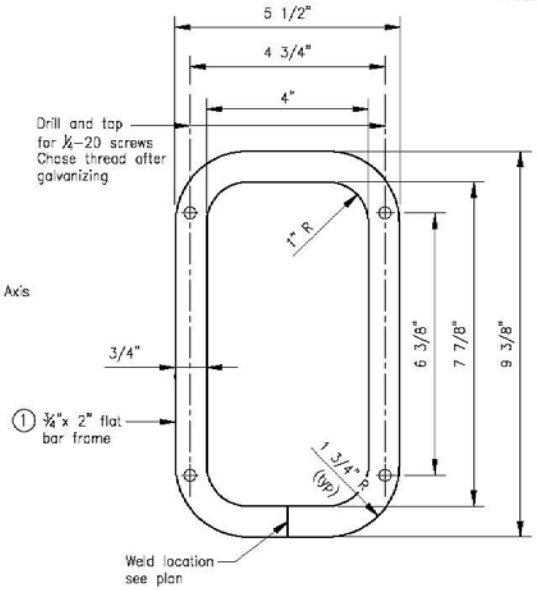

HANDHOLE FRAME DETAIL

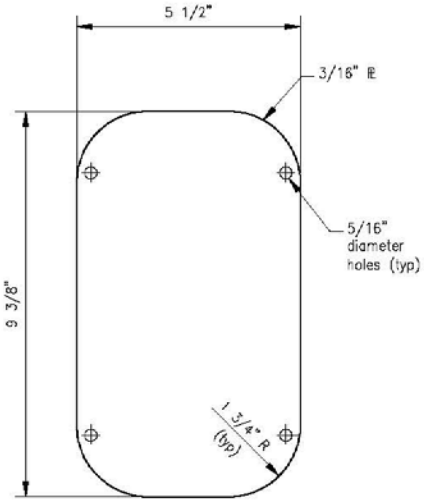

HANDHOLE COVER

INDIANA DEPARTMENT OF TRANSPORTATION

SIGN BOX TRUSS STRUCTURE
STEEL END SUPPORT HANDHOLE DETAILS

OCTOBER 2008

DRAWING NO. E 802-SBTS-11

JOHN C. MAUSER REGISTERED No. 17361 STATE OF INDIANA PROFESSIONAL ENGINEER

John C. Mauser 07/18/08
DESIGN ENGINEER DATE

DESIGNED: JCM DRAWN: MEW

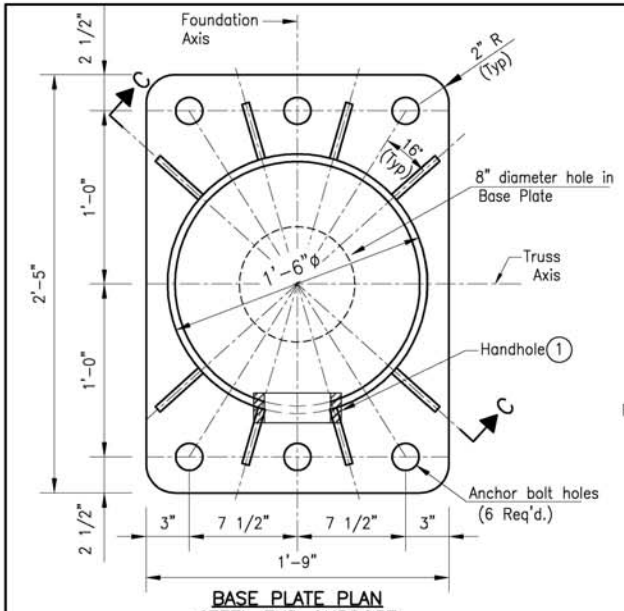

BASE PLATE PLAN
STEEL END SUPPORT
TYPE A

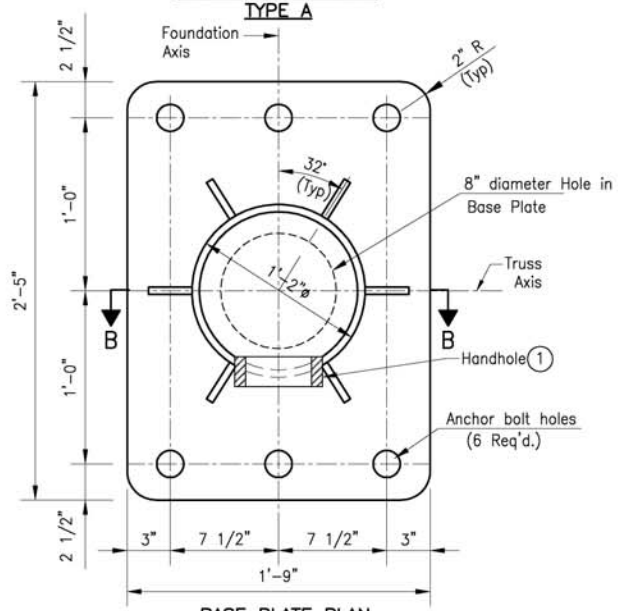

BASE PLATE PLAN
STEEL END SUPPORT
TYPE B

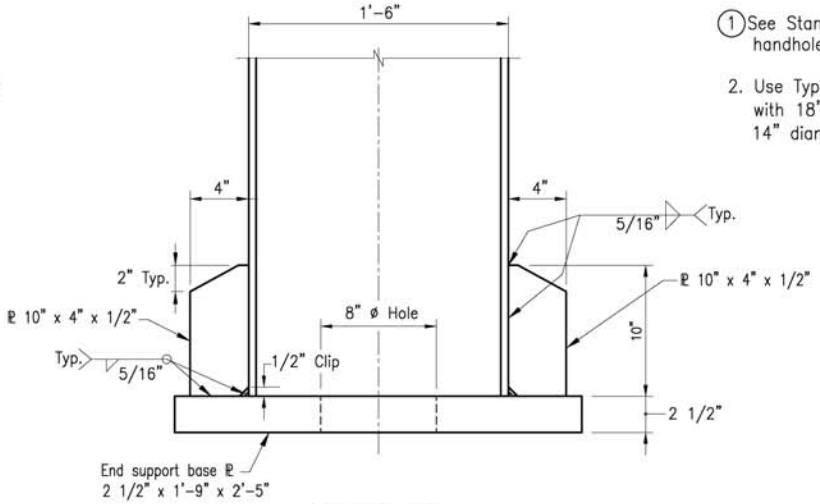

SECTION C–C

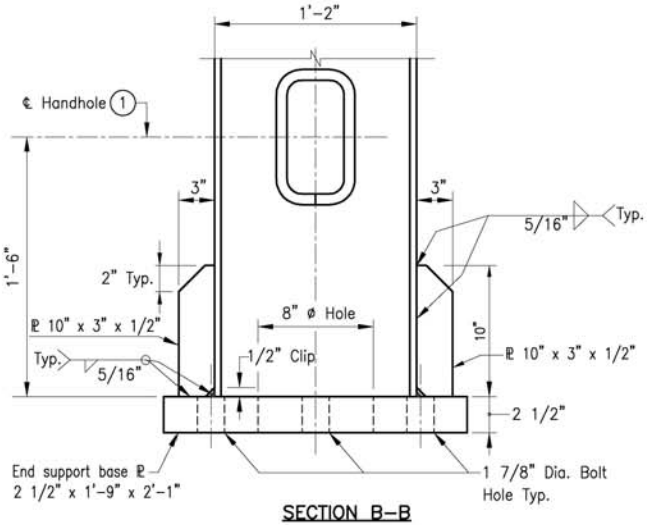

SECTION B–B

NOTES:

1. See Standard Drawing E 802–SBTS–11 for handhole details.
2. Use Type A Base Plate for End Supports with 18" diameter columns and Type B for 14" diameter columns.

INDIANA DEPARTMENT OF TRANSPORTATION

SIGN BOX TRUSS STRUCTURE
STEEL END SUPPORT BASE DETAILS

OCTOBER 2008

DRAWING NO. E 802–SBTS–12

JOHN C. MAUSER REGISTERED No. 17361 STATE OF INDIANA PROFESSIONAL ENGINEER

John C. Mauser 07/18/08
DESIGN ENGINEER DATE

DESIGNED: JCM DRAWN: MBW

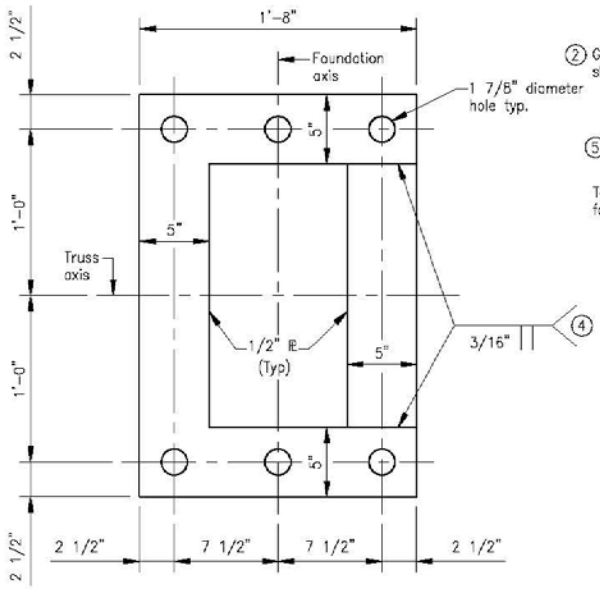

TEMPORARY POSITIONING PLATE

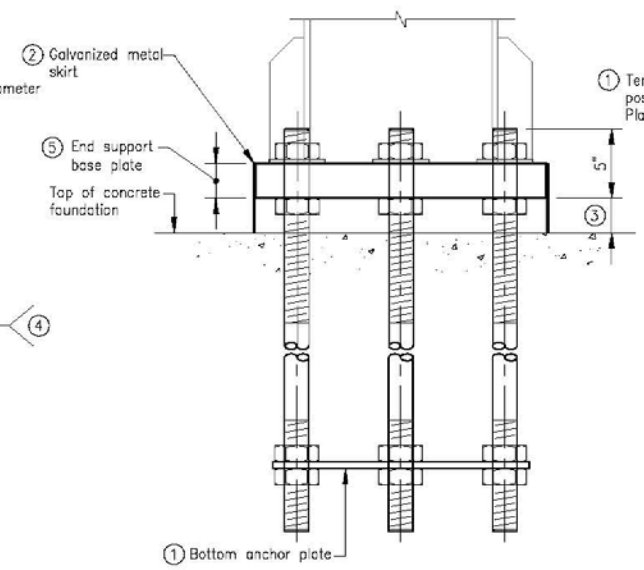

ANCHOR BOLT DETAILS
AFTER CONCRETE PLACEMENT

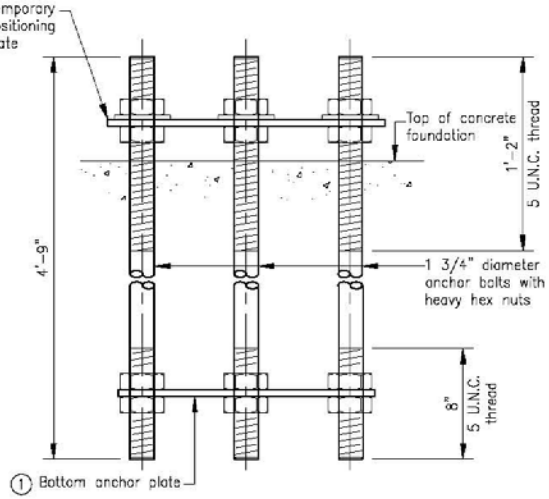

ANCHOR BOLT DETAILS
BEFORE CONCRETE PLACEMENT

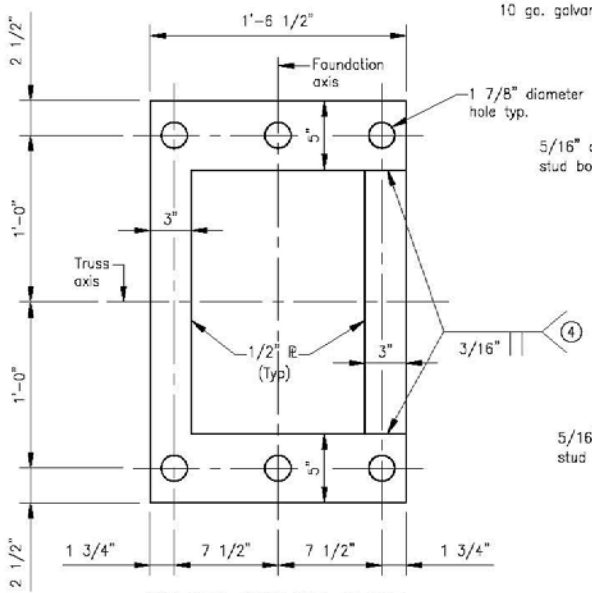

BOTTOM ANCHOR PLATE

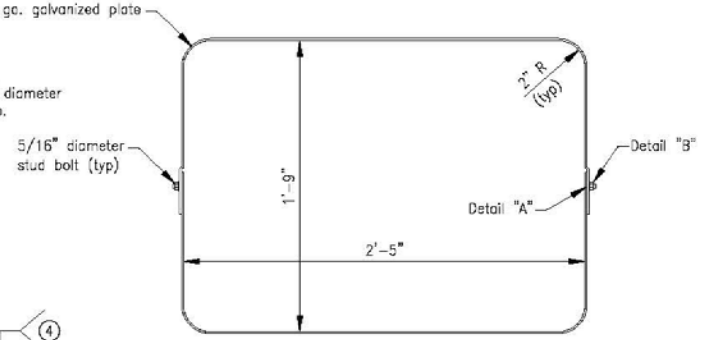

SKIRT DETAIL

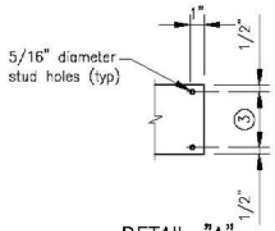

DETAIL "A"

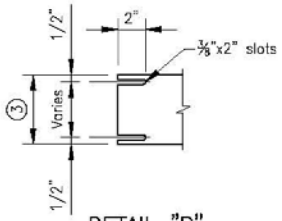

DETAIL "B"

NOTES:

1. Use temporary positioning plate and bottom anchor plate for all foundations. Temporary positioning plate should be removed after placing concrete.
2. Secure galvanized metal skirt to base plate after erection as show in skirt detail.
3. Minimum base plate gap is 2 1/2" and can be increased up to 5 1/2" if required for the adjustments due to grade. Metal skirt width shall be at least 1 1/2" more than the maximum gap.
4. Optionally may use four separate bars. Weld to maintain angles and shapes as shown.
5. For end support base plate details see Standard Drawing E 802-SBTS-12.

INDIANA DEPARTMENT OF TRANSPORTATION

SIGN BOX TRUSS STRUCTURE
STEEL END SUPPORT BASE DETAILS

OCTOBER 2008

DRAWING NO. E 802-SBTS-13

JOHN C. MAUSER REGISTERED No. 17361 STATE OF INDIANA PROFESSIONAL ENGINEER

John C. Mauser 07/18/08
DESIGN ENGINEER DATE

DESIGNED: JCM DRAWN: MBW

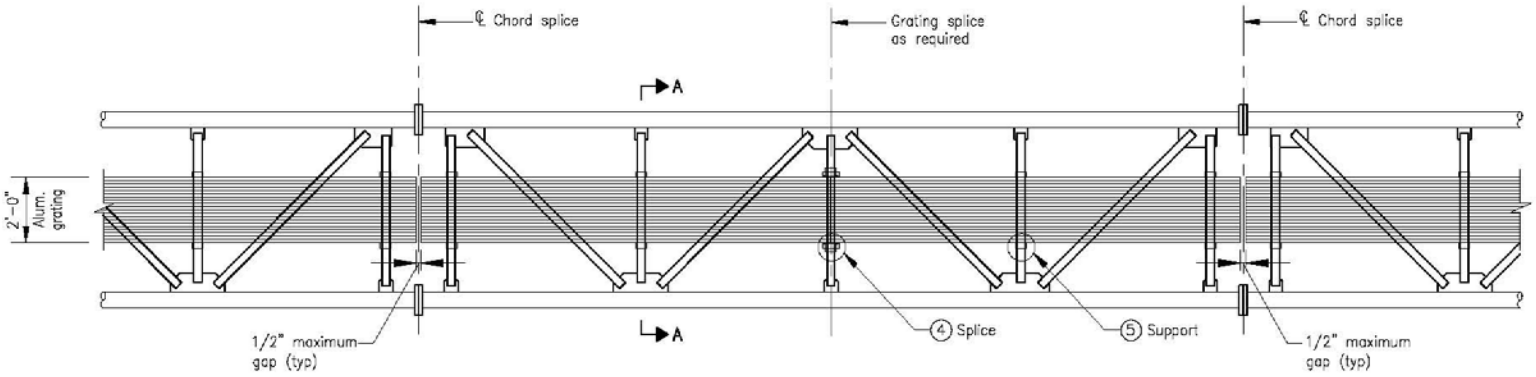

WALKWAY GRATING PLAN

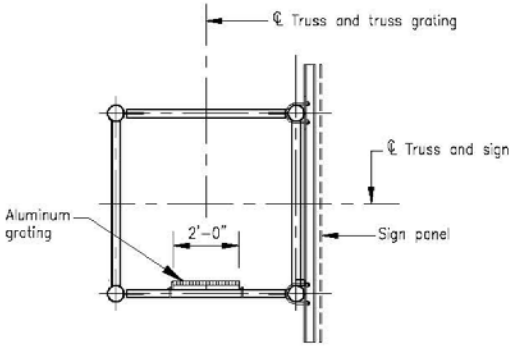

SECTION A–A

Notes:

1. Refer to Standard Drawing E 802–SNWW–02 for additional aluminum grating requirements.
2. Grating shall run full length center to center of end support frames plus 9" each end.
3. Grating width is nominal and may vary ± ½" based on available standard widths.

④ Grating can be spliced on any of the horizontals within a section as needed. See Detail 2 on Standard Drawing E 802–SBTS–15 for typical grating splice detail.

⑤ See Detail 1 on Standard Drawing E 802–SBTS–15 for typical grating support detail.

INDIANA DEPARTMENT OF TRANSPORTATION

SIGN BOX TRUSS STRUCTURE
INTERIOR WALKWAY GRATING PLAN

OCTOBER 2008

DRAWING NO. E 802–SBTS–14

JOHN C. MAUSER REGISTERED No. 17361 STATE OF INDIANA PROFESSIONAL ENGINEER

John C. Mauser 07/18/08
DESIGN ENGINEER DATE

DESIGNED: JCM DRAWN: MBW

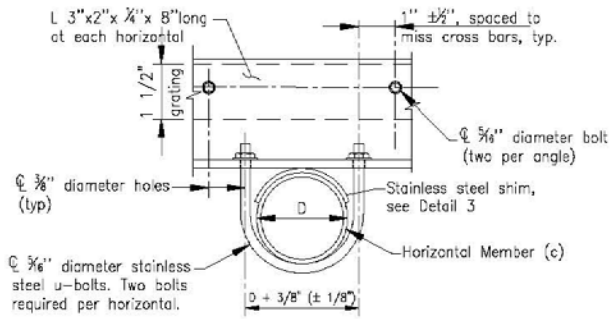

SECTION B–B

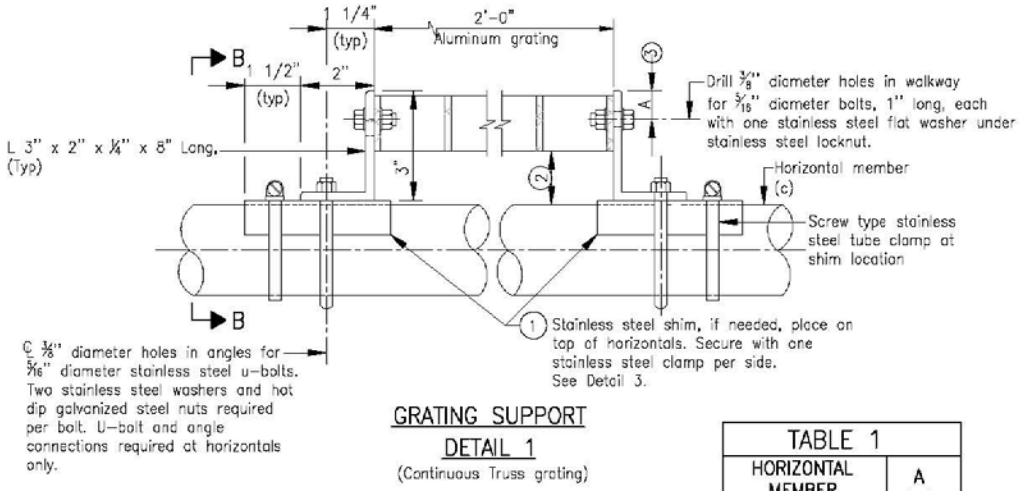

GRATING SUPPORT DETAIL 1

(Continuous Truss grating)

TABLE 1	
HORIZONTAL MEMBER OUTSIDE DIAMETER	A (IN)
2"	3/4
2 1/2"	1/2

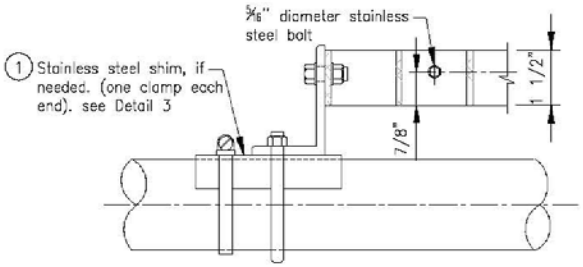

SECTION C–C

(Details not shown same as Detail 1)

NOTES:

1. Stainless steel shims shall be placed as shown in Details 1 and 2 if needed to compensate for alignment variations between horizontal and horizontal diagonals. Thicker shims may be used subject to shims performing properly.
2. Tube to grating gap may vary from 1 1/4" to 1 1/2", max. to align walkway, allow for camber, etc.
3. See Table 1 for A dimensions.

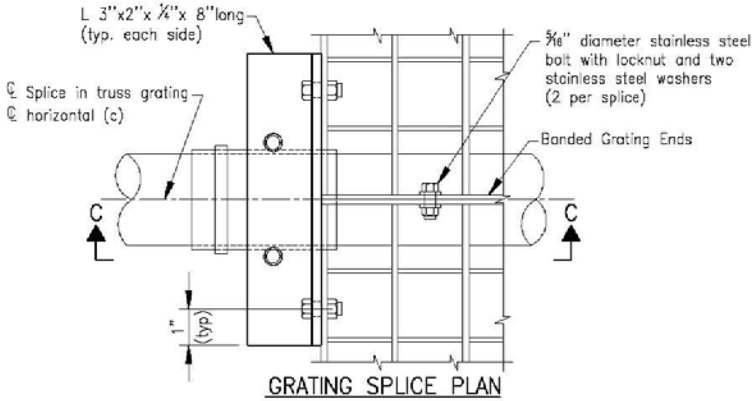

GRATING SPLICE PLAN DETAIL 2

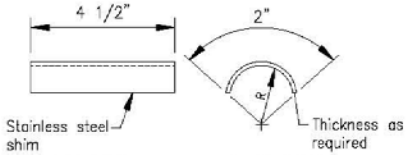

ELEVATION END VIEW

SHIM –DETAIL 3

R = bend to match tube (approximately)

INDIANA DEPARTMENT OF TRANSPORTATION

SIGN BOX TRUSS STRUCTURE
INTERIOR WALKWAY GRATING DETAILS

OCTOBER 2008

DRAWING NO. E 802–SBTS–15

JOHN C. MAUSER REGISTERED No. 17361 STATE OF INDIANA PROFESSIONAL ENGINEER

John C. Mauser 07/18/08
DESIGN ENGINEER DATE

DESIGNED: JCM DRAWN:

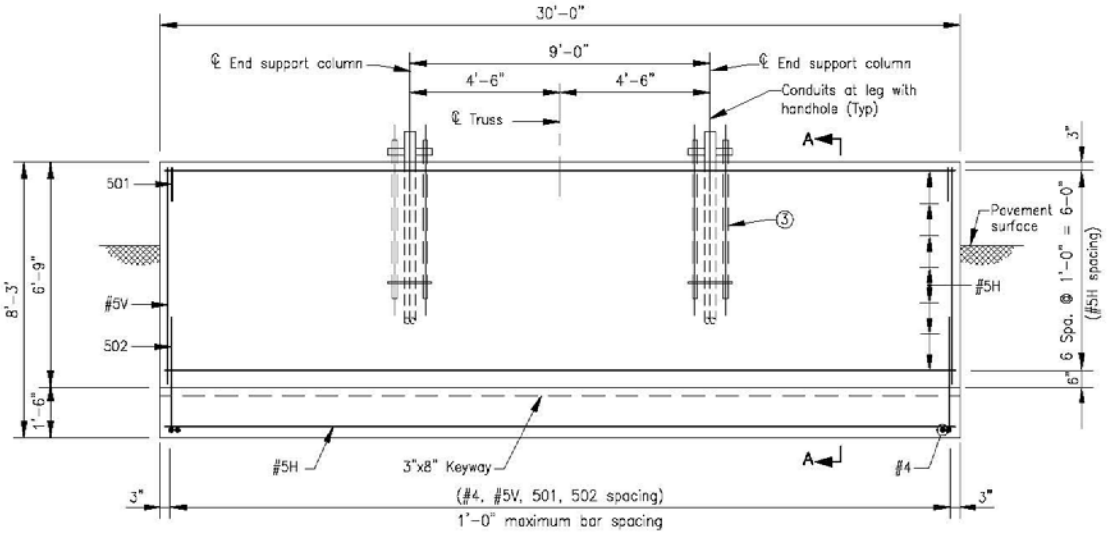

SECTION C–C

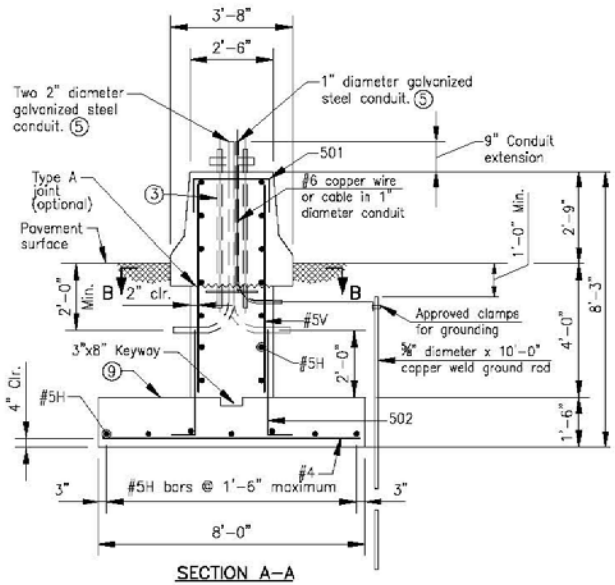

SECTION A–A

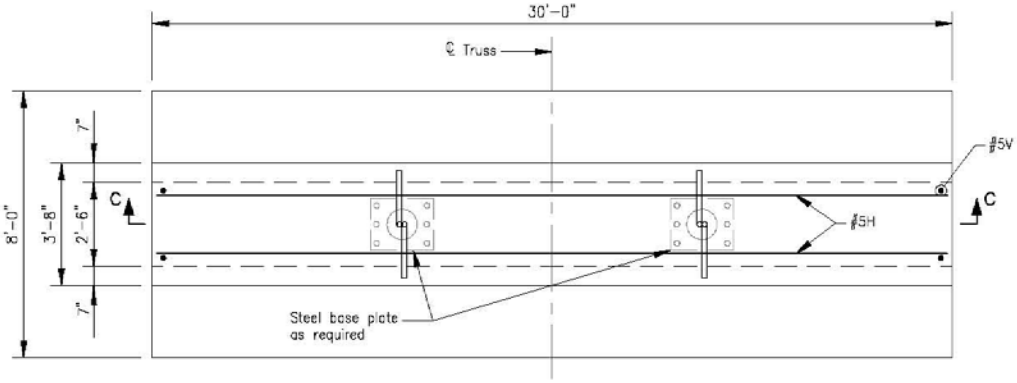

SECTION B–B

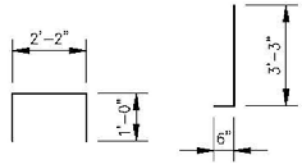

501 x 4'-2" 502 x 3'-9"

Notes:

1. For barrier wall width transition see Standard Drawing E 602-CCMB-03.
2. All reinforcement to be epoxy coated.
3. For anchor bolts, See Standard Drawing E 802-SBTS-13.
4. Surface seal top and sides of barrier railing to the pavement surface.
5. Thread and cap both ends of steel conduit.
6. Top of foundation shall be level.
7. For reinforcing schedule see Standard Drawing E 802-SBTS-19.
8. This drawing is applicable to all box truss spans, mounting heights and sign areas. The design is based on a minimum allowable soil bearing pressure of 1500 psf.
9. The top of the footing shall be a minimum of 4'-0" below the pavement or ground surface.

Legend:

H = Horizontal bar

V = Vertical bar

INDIANA DEPARTMENT OF TRANSPORTATION

SIGN BOX TRUSS STRUCTURE FOUNDATION AT 33" CONCRETE BARRIER WALL

OCTOBER 2008

DRAWING NO. E 802-SBTS-16

JOHN C. MAUSER REGISTERED No. 17361 STATE OF INDIANA PROFESSIONAL ENGINEER

John C. Mauser 9/24/08
DESIGN ENGINEER DATE

DESIGNED: JCM DRAWN: REM

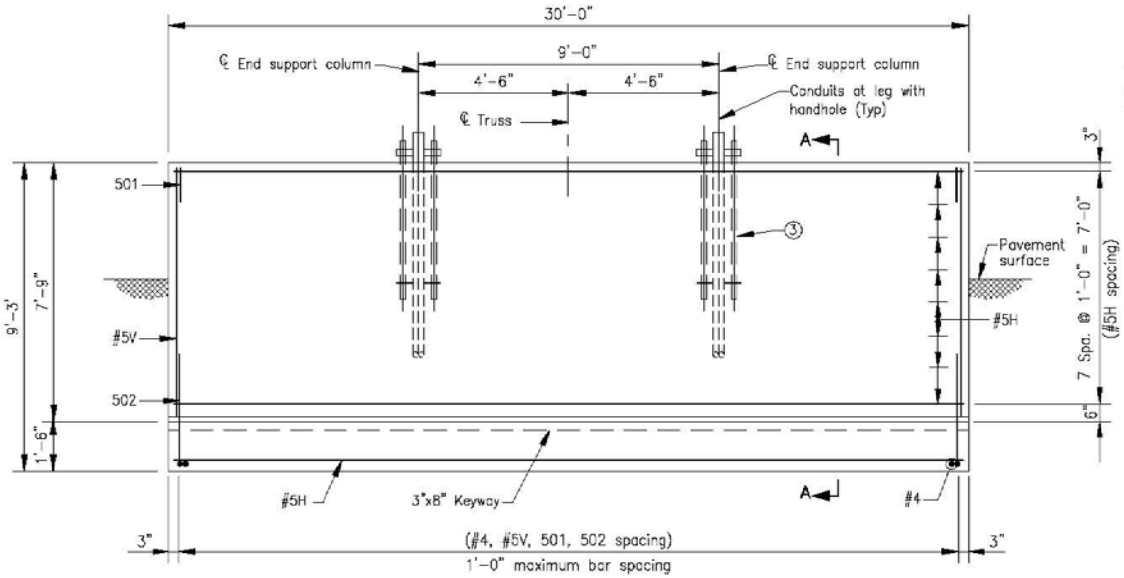

SECTION C–C

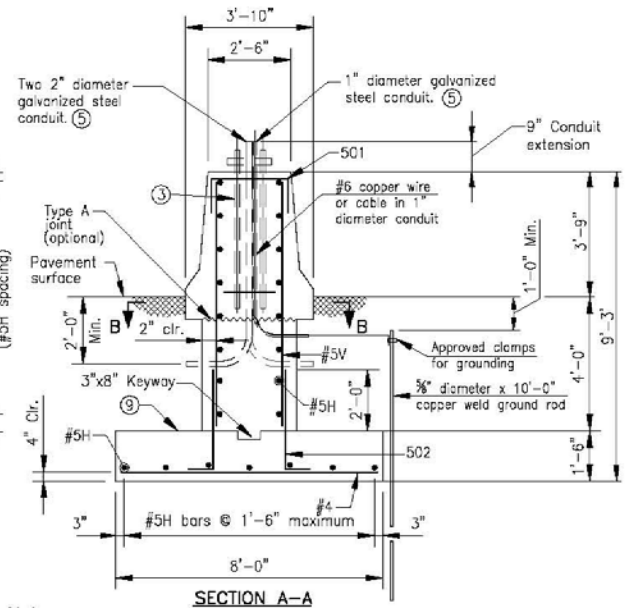

SECTION A–A

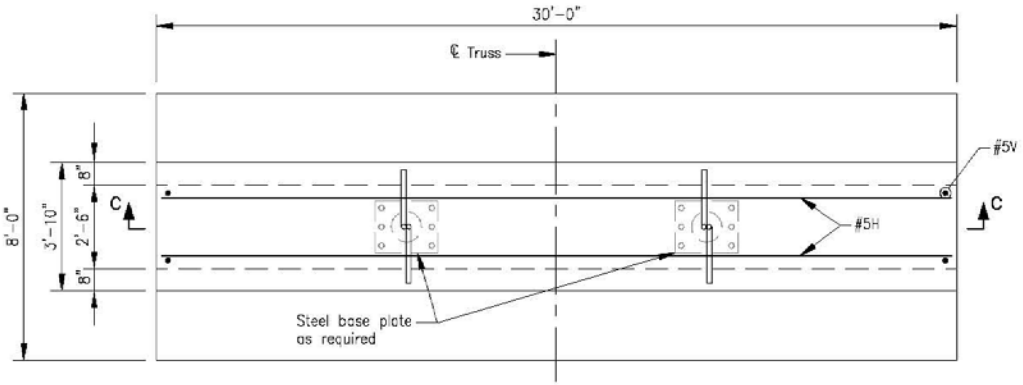

SECTION B–B

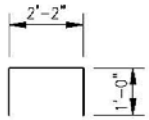

501 x 4'-2"

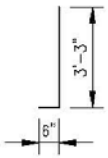

502 x 3'-9"

Notes:

1. For barrier wall width transition see Standard Drawing E 602–CCMB–03.
2. All reinforcement to be epoxy coated.
3. For anchor bolts, See Standard Drawing E 802–SBTS–13.
4. Surface seal top and sides of barrier railing to the pavement surface.
5. Thread and cap both ends of steel conduit.
6. Top of foundation shall be level.
7. For reinforcing schedule see Standard Drawing E 802–SBTS–19.
8. This drawing is applicable to all box truss spans, mounting heights and sign areas. The design is based on a minimum allowable soil bearing pressure of 1500 psf.
9. The top of the footing shall be a minimum of 4'–0" below the pavement or ground surface.

Legend:

H = Horizontal bar

V = Vertical bar

INDIANA DEPARTMENT OF TRANSPORTATION

SIGN BOX TRUSS STRUCTURE FOUNDATION AT 45" CONCRETE BARRIER WALL

OCTOBER 2008

DRAWING NO. E 802–SBTS–17

JOHN C. MAUSER REGISTERED No. 17361 STATE OF INDIANA PROFESSIONAL ENGINEER

John C. Mauser 9/24/08

DESIGN ENGINEER DATE

DESIGNED: JCM DRAWN: REM

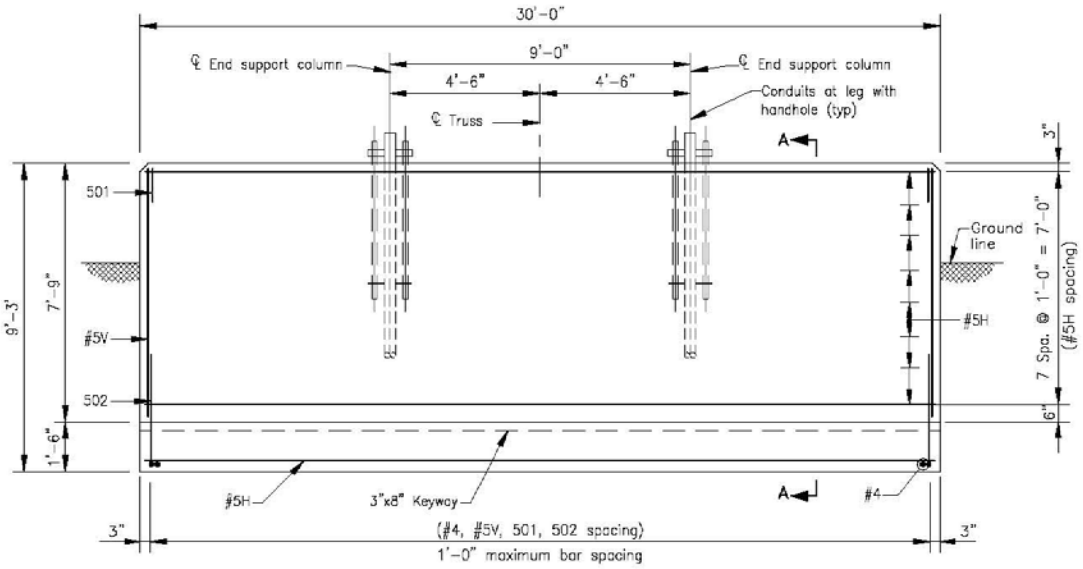

SECTION C–C

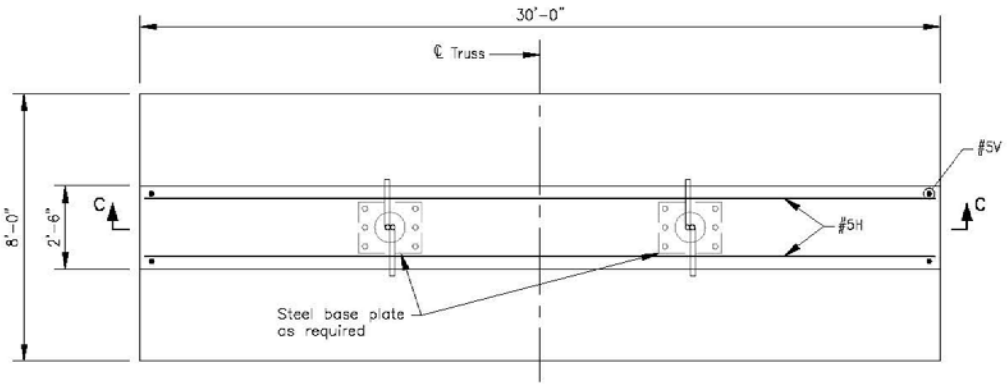

SECTIONB–B

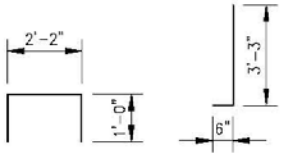

501 x 4'-2" 502 x 3'-9"

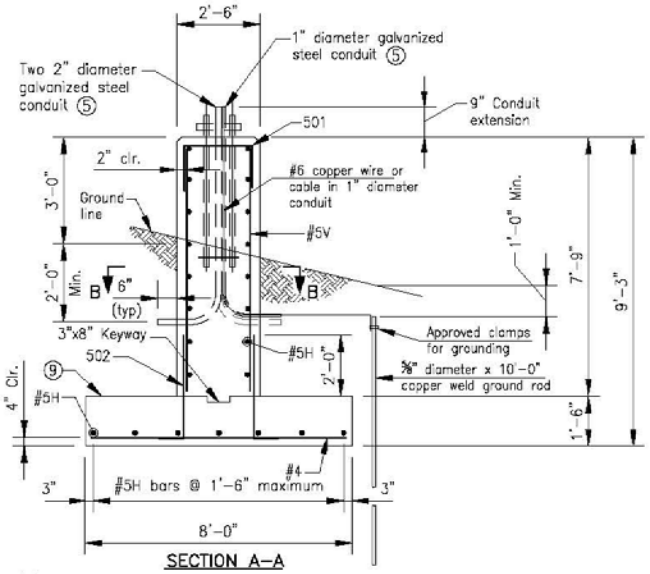

SECTION A–A

Notes:

1. For barrier wall width transition see Standard Drawing E 602–CCMB–03.
2. All reinforcement to be epoxy coated.
3. For anchor bolts, See Standard Drawing E 802–SBTS–13.
4. Surface seal top and sides of foundation wall to the ground surface.
5. Thread and cap both ends of steel conduit.
6. Top of foundation shall be level.
7. For reinforcing schedule see Standard Drawing E 802–SBTS–19.
8. This drawing is applicable to all box truss spans, mounting heights and sign areas. The design is based on a minimum allowable soil bearing pressure of 1500 psf.
9. The top of the footing shall be a minimum of 4'–0" below the pavement or ground surface.

Legend:

H = Horizontal bar

V = Vertical bar

INDIANA DEPARTMENT OF TRANSPORTATION

SIGN BOX TRUSS STRUCTURE FOUNDATION AT 36" MEDIAN OR SHOULDER

OCTOBER 2008

DRAWING NO. E 802–SBTS–18

JOHN C. MAUSER REGISTERED No. 17361 STATE OF INDIANA PROFESSIONAL ENGINEER

John C. Mauser 9/24/08

DESIGN ENGINEER DATE

DESIGNED: JCM DRAWN: REM

FOUNDATION AT 33" CONCRETE BARRIER WALL			
EPOXY COATED REINFORCING			
SIZE & MARK	NO. OF BARS	LENGTH (FT. & IN.)	WEIGHT (LBS.)
#4	31	7 ' - 8 "	
TOTAL #4			159
501	31	4 ' - 2 "	
502	62	3 ' - 9 "	
#5V	62	6 ' - 6 "	
#5H	21	29 ' - 8 "	
TOTAL #5			1447
TOTAL EPOXY COATED REINFORCING			1606
CONCRETE			
CONCRETE , CLASS "A" (CYS)			34.1
MISCELLANEOUS			
SURFACE SEAL (SYS)			27.6

FOUNDATION AT 45" CONCRETE BARRIER WALL			
EPOXY COATED REINFORCING			
SIZE & MARK	NO. OF BARS	LENGTH (FT. & IN.)	WEIGHT (LBS.)
#4	31	7 ' - 8 "	
TOTAL #4			159
501	31	4 ' - 2 "	
502	62	3 ' - 9 "	
#5V	62	7 ' - 6 "	
#5H	23	29 ' - 8 "	
TOTAL #5			1574
TOTAL EPOXY COATED REINFORCING			1733
CONCRETE			
CONCRETE , CLASS "A" (CYS)			37.6
MISCELLANEOUS			
SURFACE SEAL (SYS)			34.3

FOUNDATION AT 36" MEDIAN OR SHOULDER			
EPOXY COATED REINFORCING			
SIZE & MARK	NO. OF BARS	LENGTH (FT. & IN.)	WEIGHT (LBS.)
#4	31	7 ' - 8 "	
TOTAL #4			159
501	31	4 ' - 2 "	
502	62	3 ' - 9 "	
#5V	62	7 ' - 6 "	
#5H	23	29 ' - 8 "	
TOTAL #5			1574
TOTAL EPOXY COATED REINFORCING			1733
CONCRETE			
CONCRETE , CLASS "A" (CYS)			34.9
MISCELLANEOUS			
SURFACE SEAL (SYS)			28.3

INDIANA DEPARTMENT OF TRANSPORTATION

SIGN BOX TRUSS STRUCTURE
SPREAD FOOTING QUANTITIES

OCTOBER 2008

DRAWING NO. E 802-SBTS-19

JOHN C. MAUSER REGISTERED No. 17361 STATE OF INDIANA PROFESSIONAL ENGINEER

John C. Mauser 9/24/08
DESIGN ENGINEER DATE

DESIGNED: JCM DRAWN: REM

INDIANA DEPARTMENT OF TRANSPORTATION

Driving Indiana's Economic Growth

Design Memorandum No. 08-__
Technical Advisory

November, 2008

TO: **All Design, Operations, and District Personnel, and Consultants**

FROM: **_____**
Anthony L. Uremovich
Design Resources Engineer
Production Management Division

SUBJECT: **Overhead Box Truss Sign Structures and foundations**

NEW STANDARDS
DRAWINGS: **INDOT Standards drawings October 2008 No E 802-SBTS-01 to 19**

SUPERCEDES: **INDOT Standards drawings to 2005 No 802-SNOH-01 to 16 and**
INDOT Standards drawing March 2003 No 802-SNBF-01 to 07

EFFECTIVE: **_____, 2009, Letting**

FINAL DRAFT MINUTES

The Overhead Box Truss Structures and their foundations have been redesigned based on the AASHTO *Standard Specifications for Structural Supports for Highway Signs, Luminaries, an*d *Traffic Signals, 4th Edition,* including 2006 Interims. All box trusses are aluminum while all end support columns are steel. Standard Design Types: A, B, C, D, and E are provided for certain combinations. New and redesigned, box truss structures have been developed for use with certain combinations of sign areas, spans lengths and heights.

I. <u>Overhead Box Trusses</u>

All aluminum standard box trusses are designated as:

Overhead Box Truss Structure, Type A
Overhead Box Truss Structure, Type B

Overhead Box Truss Structure, Type C
Overhead Box Truss Structure, Type D
Overhead Box Truss Structure, Type E

Standard designs Type A to Type E are provided for combinations of maximum sign areas of 500, 700 and 900 sft and maximum spans of 100 ft and 130 ft. They are built up from Exterior Sections and Interior Sections and their number varies depending on the required spans length Minimum number of sections shall be used for each truss keeping the maximum section length 35'-6". A single Interior Section in a truss shall have an even number of panels to maintain the pattern of vertical diagonals. All standard box truss width has been established at 6'-6". All panels on the truss shall be the same length; the minimum panel length for all trusses is 5'-0 and maximum 6'-6". The details are shown on INDOT *Standard Drawings* 802-SBTS-series.

If a particular structure does not fit within the parameters of any of the standards Type A-E a special design shall be provided by the designer.

II. Overhead Box Truss Supports

End Support Members are steel tubes spaced 9'-0. The required sections of steel tubes are tabulated and depend on maximum sign area and span of the truss. Maximum mounting heights assumed for calculation is 28'-6". The details are shown on new INDOT *Standard Drawing*s.

III. Spread Footing

Spread footing design is provided for 33" and 45" Concrete Barrier and 36" Median or Shoulder Barrier for allowable soil bearing pressure: 1500, 2500, 3500 psf. If the allowable gross soil bearing capacity is less than 1500 psf, the designer shall provide a special foundation design and submit design calculations for review and approval. The results of calculations for soil bearing pressures above 3500 psf are not controlled by the bearing capacity of the soil but for overturning stability and require special design. The details of standard footings are shown on new INDOT *Standard Drawings* 802-SBTS-series.

The designer shall request a geotechnical investigation at the preliminary field check for each project requiring box trusses.

IV. Design Parameters

Structure Design

The overhead sign truss structures and their supports are design using allowable stress (ASD) approach in accordance with ASSHTO Specification and the following design parameters:

90 mph wind

FINAL DRAFT MINUTES

50 years service life
Wind Importance Factor Ir = 1
Gust Effect Factor G = 1.14
Drag Coefficients, Cd:
The sign height is assumed as 20 ft but length varies based on the sign area under consideration.

Signs Cd = 1.2, based on L/W = 5 (where L is longer dimension of the attached sign)

Truss members Cd = varies 1.1 to 1.2 as in Table 3-6, Section 3 of Specs

Fatigue Category I – Truck and Natural Wind gust loads only
Fatigue Importance Factor, $I_f = 1$
Overhead sign structures were analyzed for four loads: dead, wind, ice and fatigue.
Dead load for the materials used is as follow:
Aluminum – 169 lbs/ft^3
Steel - 490 lbs//ft^3
Traffic message sign - 2.48 lb/ft (aluminum extruded panels (12" typical)

The most common spans for sign trusses are 80', 100', and 130', five different sign areas are identified as most often used; 500, 600, 700, 800, and 900 sft, and two mounting heights are most often needed 26'-6" and 28'-6". However, the changes in member sizes were not significant enough to keep all the different design in use. The final design and analysis is performed for

3 sign areas: 500, 700 900 sft
Two spans lengths: 100, 130 ft
One mounting height: 28'-6"

Gusset plates have been used at the horizontal and horizontal diagonal member connections to the chords where the calculations indicate the critical fatigue stress range for the member sizes used.
The interior walkway is added to all the box trusses with the maximum weight of 5 psf.

Maximum stresses in the members were checked against the allowable stresses for two locations of the sign: sign located nearest to the column and sign located at the center of the span. Those two locations are considered the worst loading conditions for checking columns, chords and bracing members.

V. Determining Standard Footing Item

Standard spread footing should be shown on the plans using the following pay item format:

FINAL DRAFT MINUTES

Box Truss Sign Structure Foundation, _____.....EACH
TYPE

The pay item names should be one of the following designations: 33” Concrete Barrier Wall, 45” Concrete Barrier Wall, and 36” Median or Shoulder.

These three foundations will cover all type of box trusses to 130’ span and a maximum of 900 square foot.

FINAL DRAFT MINUTES

REVISION TO 2008 STANDARD SPECIFICATIONS

SECTION 910, BEGIN LINE 1163, DELETE AND INSERT AS FOLLOWS:

910.19 Overhead Sign Structures

The complete structure with signs in place shall be able to withstand wind pressure in accordance with AASHTO ~~specifications for the Design and Construction of Structural Supports for Highway Signs~~ *Standard Specifications for Structural Supports for Highway Signs, Luminaires and Traffic Signals*. The structure shall be designed to resist ~~movement by the wind which might contribute to the~~ fatigue of the material *in accordance with the AASHTO specifications*.

SECTION 910, BEGIN LINE 1187, DELETE AND INSERT AS FOLLOWS:

(a) Aluminum Overhead Sign Structures, Box Truss and Bridge Attached

Extruded tubes shall be of aluminum in accordance with ASTM B 221 (B 221M), B 241 (B 241M), or B 429, alloy 6061-T6. ~~Anchor base castings shall be of aluminum in accordance with ASTM B 26 (B 26M) or B 108, alloy 356.0-T6.~~ All other castings shall be of aluminum in accordance with ASTM B 26 (B 26M), alloy 356.0-T6. Plates shall be of aluminum in accordance with ASTM B 209 (B 209M), alloy 6061-T6. Plates shall be free of sharp edges and irregularities.

Welding material and procedures shall be in accordance with *803 and* applicable AWS provisions.

Bolts, nuts, screws, and flat washers shall be passivated type 304 stainless steel. Bolts and screws shall be in accordance with ASTM A 193 (A 193M), grade B8. Hexagon nuts and washers shall be in accordance with ASTM A 194 (A 194M), grade 8. *Where high-strength bolts are indicated on the plans for chord splice connections, bolts and nuts shall be in accordance with 910.02(f) and shall be galvanized in accordance with AASHTO M 232.*

Anchor bolts*, nuts and washers* shall be in accordance with ASTM ~~A 307~~ *F 1554*. A hexagon nut, leveling nut, and flat washer ~~in accordance with ASTM A 307, grade A,~~ shall be furnished with each anchor bolt. ~~Threaded~~ *Top* ends of anchor bolts and associated hardware*, as shown on the plans,* shall be coated in accordance with ASTM A 153 or be mechanically galvanized and conform to the coating thickness, adherence, and quality requirements of ASTM A 153, class C.

Certified proof of the qualifications for a minimum of two welders shall be presented after the contract is awarded and before fabrication is started. This certification shall be from a commercial or public testing laboratory and qualifications shall be based on welding of aluminum alloy, 6061-T6 with consumable electrode type welding using aluminum alloy ~~ER4043~~ *ER5356* filler material. Welders shall qualify by passing the requirements of "Procedure and Performance Tests of Qualification Standard for Welding Procedures, Welders, and Welding Operations", latest edition, formulated by the Boiler and Pressure Vessel Committee of the American Society of Mechanical Engineers.

FINAL DRAFT MINUTES

SECTION 910, BEGIN LINE 1227, DELETE AND INSERT AS FOLLOWS:

(b) Steel Overhead Sign Structures, Box Truss, Cantilever, Monotube, and Bridge Attached

Steel sections used for upright members, cross beams, or horizontal members shall be either tapered or constant cross section tubular members as specified herein. The tubular members may be either circular or multi-sided.

Box truss and bridge attached structures shall be fabricated from constant cross section tubular steel in accordance with ASTM A 53, type E or S, grade B *(minimum yield strength of 35,000 psi)*. Constant cross section tubular steel with greater yield strength may be used, with written approval. However, structural dimensions must remain as shown on the plans. Structures shall be galvanized after fabrication in accordance with ASTM A 123.

SECTION 910, BEGIN LINE 1266, DELETE AND INSERT AS FOLLOWS:

Gusset, flange, and base plates shall be in accordance with ASTM A 36 (A 36M) and shall be galvanized after fabrication in accordance with ASTM A 123. Base plates for upright poles shall develop the full strength of the poles. Castings for the vertical pole top and horizontal arm and cap shall be in accordance with ASTM A 126 and shall be galvanized with a minimum coating of 2 oz/sq ft (610 g/m^2). Bolts, except anchor bolts, and nuts shall be in accordance with ASTM A 307 *or high-strength bolts as shown on the plans*. Two nuts for use in plumbing upright poles shall be furnished with each anchor bolt. Anchor bolts, except for box truss structures, shall be in accordance with ASTM A 675, grade 90 (A 675M, grade 620); ASTM A 576 modified to 55,000 psi (379 MPa) minimum yield strength; or ASTM A 307, grade A modified to 55,000 psi (379 MPA) minimum yield strength. Anchor bolts for box truss structures shall be in accordance with 910.19(a). Steel bolts, nuts, washers, and ~~threaded~~ *the top* ends of anchor bolts shall be coated in accordance with ASTM A 153 or be mechanically galvanized and conform to the coating thickness, adherence, and quality requirements of ASTM A 153, class C. Welding shall be in accordance with 711.32.

FINAL DRAFT MINUTES

REVISION TO 2008 STANDARD SPECIFICATIONS

SECTION 910, CONTINUED.

Other sections containing specific cross references:

910.19
802.02 Pg 629

910.19(a)
910.19(b) Pg 798

910.19(b)
920.01(a)7 Pg 861

Recurring Special Provisions affected:

None

Standard Sheets affected:

None

Motion: M
Second: M
Ayes:
Nays:

Action: Withdrawn

___ 20__ Standard Specifications Book

___ Create RSP (No. _____)
Effective _____Letting
RSP Sunset Date: _____

___ Revise RSP (No. _____)
Effective _____Letting
RSP Sunset Date: _____

Standard Drawing Effective _____

___ Create RPD (No. _____)
Effective _____Letting
___ Technical Advisory

GIFE Update Req'd.? Y___ N___
By - Addition or Revision

Frequency Manual Update Req'd? Y___ N___
By - Addition or Revision

Received FHWA Approval? ____

FINAL DRAFT MINUTES