INDIANA DEPARTMENT OF TRANSPORTATION
Driving Indiana's Economic Growth

100 North Senate Avenue
Room N925
Indianapolis, Indiana 46204

PHONE: (317) 232-5456
FAX: (317) 232-5551

Michael R. Pence, Governor
Karl B. Browning, Commissioner

FINAL DRAFT MINUTES

September 19, 2013 Standards Committee Meeting

(Changes by the Action of the Committee shown highlighted yellow, no changes to the First Draft Minutes)

FINAL DRAFT MINUTES

MEMORANDUM

October 08, 2013

TO: Standards Committee

FROM: Scott Trammell, Secretary

RE: Minutes from the September 19, 2013 Standards Committee Meeting

A Standards Committee meeting was called to order by Mr. Miller at 09:03 a.m. on September 19, 2013 in the N955 Bay Window Conference Room. The meeting was adjourned at 10:08 a.m.

The following committee members were in attendance:

Mark Miller, Chairman, Construction Management Director
John Wooden*, Contract Administration Division
Dave Boruff, Traffic Engineering Division
Elizabeth Phillips, Bridges Division
Greg Pankow, State Construction Engineer
Jim Keefer, Fort Wayne District Construction Director
Michael Buening, Pavement Engineering
Michelle Gottschalk, Construction Technical Support
Richard Vancleave, Highway Design and Technical Support Division
Ron Walker, Materials Management

**Proxy for Bob Cales*

Also in attendance were the following:

Scott Trammell, INDOT
Steve Fisher, INDOT
Lalit Garg, INDOT
Jim Reilman, INDOT
Lana Podorvanova, INDOT
Dudley Bonte, APAI
Paul Berebitsky, ICA
Wendy Chiles, INDOT
Thomas Duncan, FHWA
Alfredo Hanza, INDOT

The following items were listed for consideration:

A. GENERAL BUSINESS ITEMS

OLD BUSINESS

(No items were listed)

NEW BUSINESS

1. Approval of the Minutes from the June 20, 2013 meeting

DISCUSSION: Mr. Miller requested a motion to accept the minutes from the last meeting, as revised by Mr. Hanza. Mr. Boruff and Mr. Hanza briefly explained the revisions made to the attached drawings (pg 4 thru 7). Mr. Buening also requested a revision to RSP 401-R-581 concerning the joint adhesive temperature range to read:

5th paragraph: *"The sealant temperature at the time of application shall be at least 135 ~~± 5~~°F and shall not exceed 180°F."* Mr. Keefer motioned to accept the minutes as presented with these revisions. Mr. Boruff seconded the motion.

Motion: Mr. Keefer
Second: Mr. Boruff
Ayes: 9
Nays: 0

ACTION: PASSED AS REVISED

2. Presentation of the Standards Committee schedule of meetings, items submittals and distributions for the year of 2014. (Scott Trammell, pg 8)

DISCUSSION: The 2014 schedule was presented to the committee by Mr. Trammell. Ms. Phillips asked for clarification concerning the approval of standard drawings in relation to the specification. Mr. Miller confirmed that the presented schedule pertains to specifications and that the drawings will be submitted and approved prior to the March Standards Committee meeting.

B. CONCEPTUAL PROPOSAL ITEMS

OLD BUSINESS

(No items were listed)

NEW BUSINESS

(No items were listed)

C. STANDARD SPECIFICATIONS, SPECIAL PROVISIONS AND STANDARD DRAWINGS PROPOSED ITEMS

OLD BUSINESS

(No items were listed)

NEW BUSINESS

Item No. 01 09/19/13 (2014 SS)	Ms. Phillips	pg 09
729-B-204	*~~FIELD~~HEAT STRAIGHTENING OF STEEL MEMBERS IN THE FIELD*	

ACTION: PASSED AS REVISED

Item No. 02 09/19/13 (2014 SS)	Mr. Boruff	pg 16
802-SCLS-12	SIGN CANTILEVER STRUCTURE DOUBLE ARM AND QUADRI-CHORD BASE PLATE, ANCHOR BOLT, AND METAL SKIRT DETAILS	
805-TSCS-02	TRAFFIC SIGNAL CANTILEVER STRUCTURE SINGLE SIGNAL ARM POLE ELEVATION, DIMENSIONS, AND BASE PLATE WELD DETAILS	
805-TSCS-05	TRAFFIC SIGNAL CANTILEVER STRUCTURE SIGNAL ARM CONNECTION DETAILS	

FINAL DRAFT MINUTES

805-TSCS-09	TRAFFIC SIGNAL CANTILEVER STRUCTURE COMBINATION POLE ELEVATION, DIMENSIONS, AND BASE PLATE WELD DETAILS
805-TSCS-11	TRAFFIC SIGNAL CANTILEVER STRUCTURE COMBINATION ARM CONNECTION DETAILS

ACTION: PASSED AS SUBMITTED

Item No. 03 09/19/13 (2014 SS) Mr. Buening pg 28

404.04	Cover Aggregate

ACTION: PASSED AS SUBMITTED

Item No. 04 09/19/13 (2014 SS) Mr. Pankow pg 31

105-C-235	*GPS ROVER FOR USE BY PROJECT PERSONNEL*

ACTION: PASSED AS SUBMITTED

cc: Committee Members
FHWA
ICA

FINAL DRAFT MINUTES

1. APPROVAL OF THE MINUTES FROM THE JUNE 20, 2013 MEETING.
PROPOSED REVISION TO ITEM 04 (WITH MARKUPS).

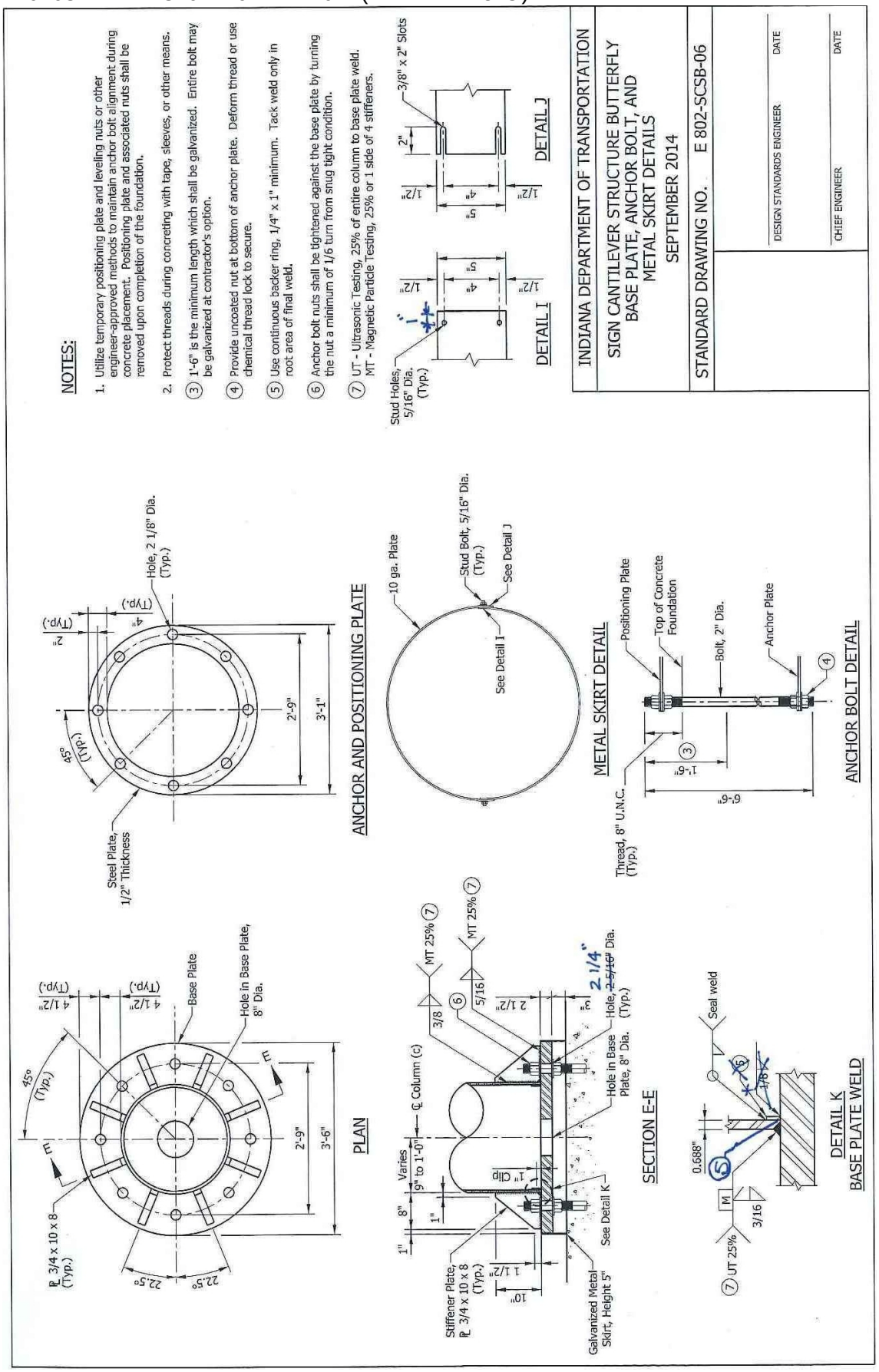

1. APPROVAL OF THE MINUTES FROM THE JUNE 20, 2013 MEETING.
PROPOSED REVISION TO ITEM 04 (DRAFT).

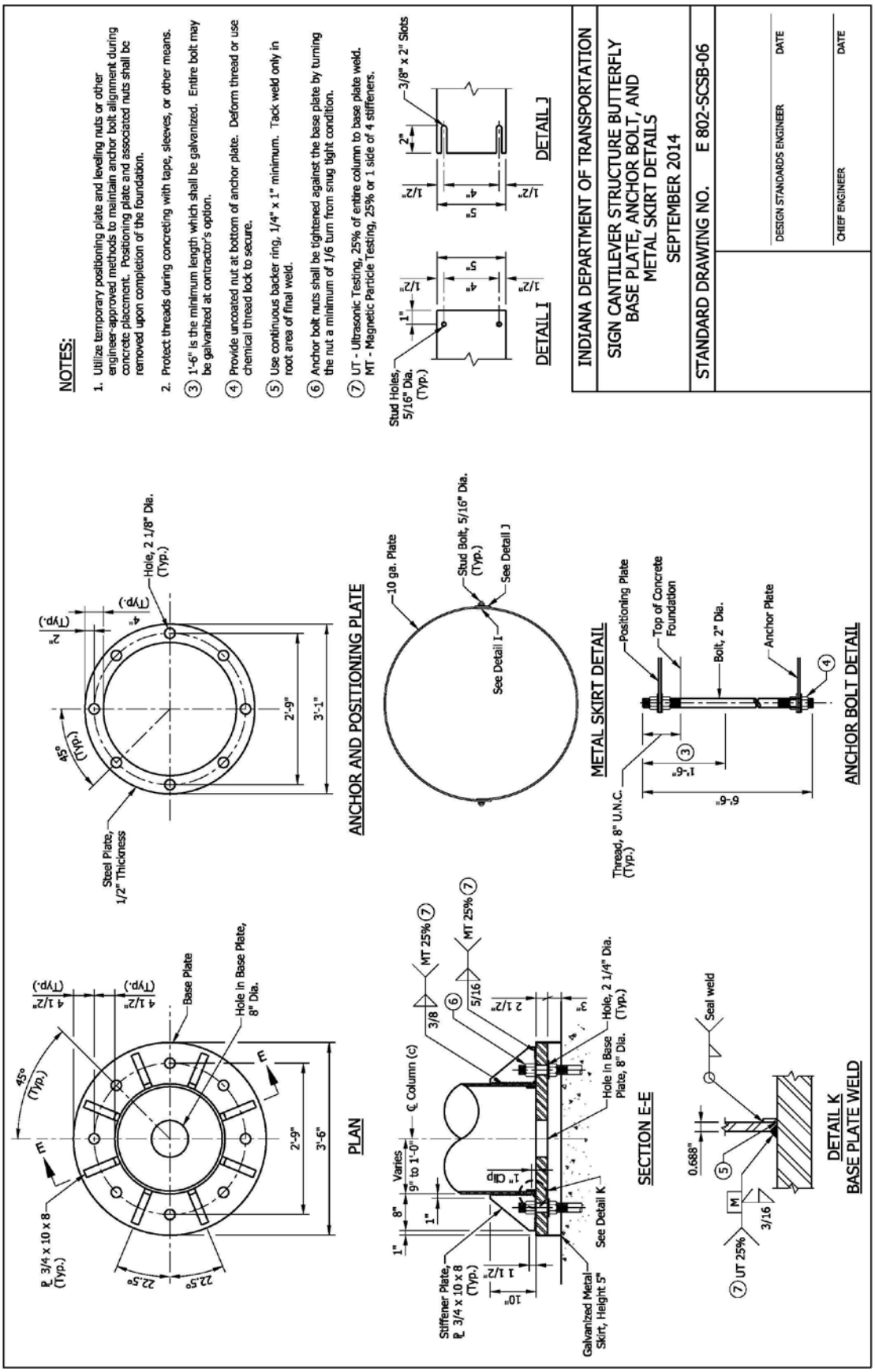

1. APPROVAL OF THE MINUTES FROM THE JUNE 20, 2013 MEETING.
PROPOSED REVISION TO ITEM 04 (WITH MARKUPS).

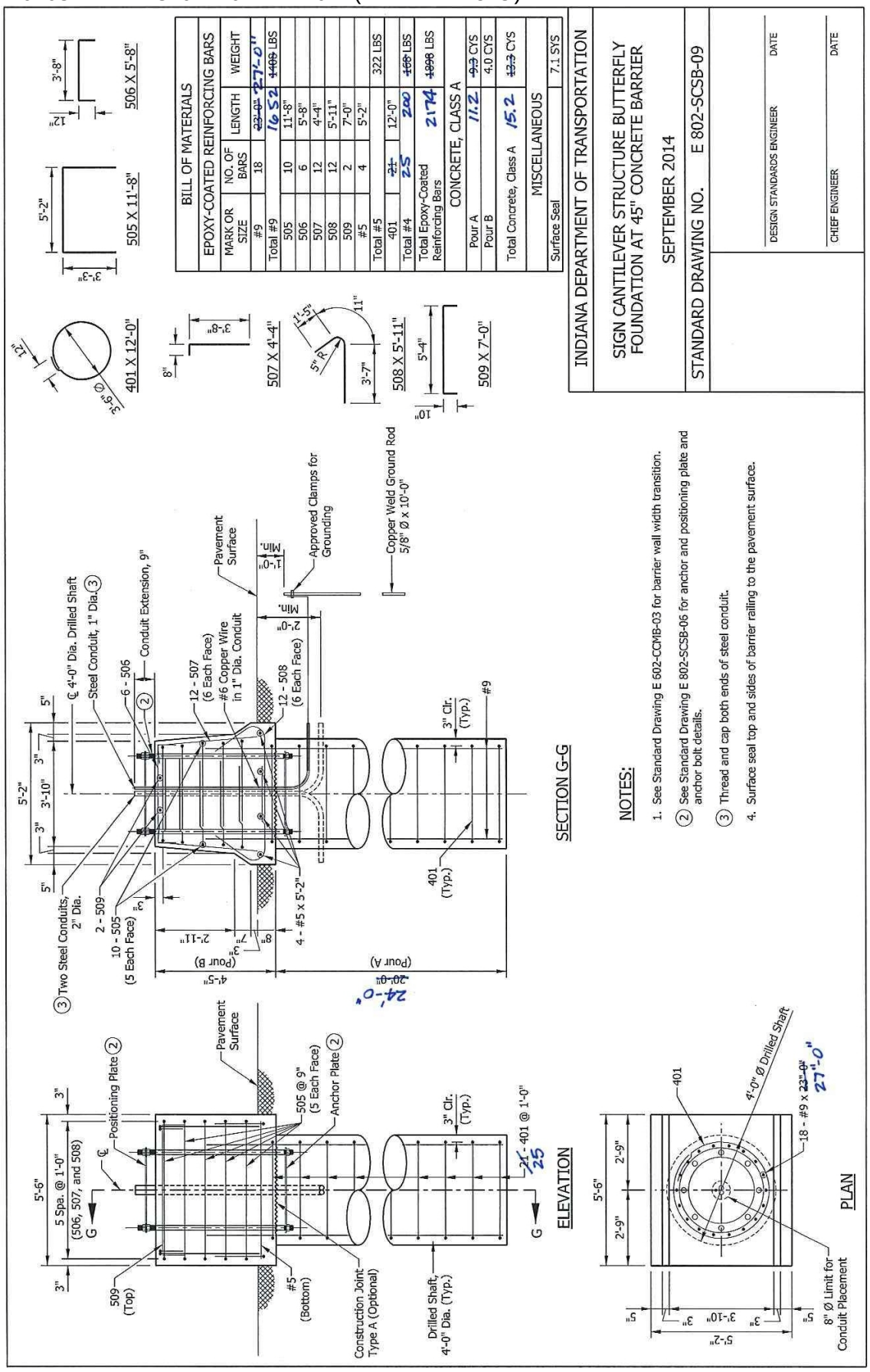

1. APPROVAL OF THE MINUTES FROM THE JUNE 20, 2013 MEETING.
PROPOSED REVISION TO ITEM 04 (DRAFT).

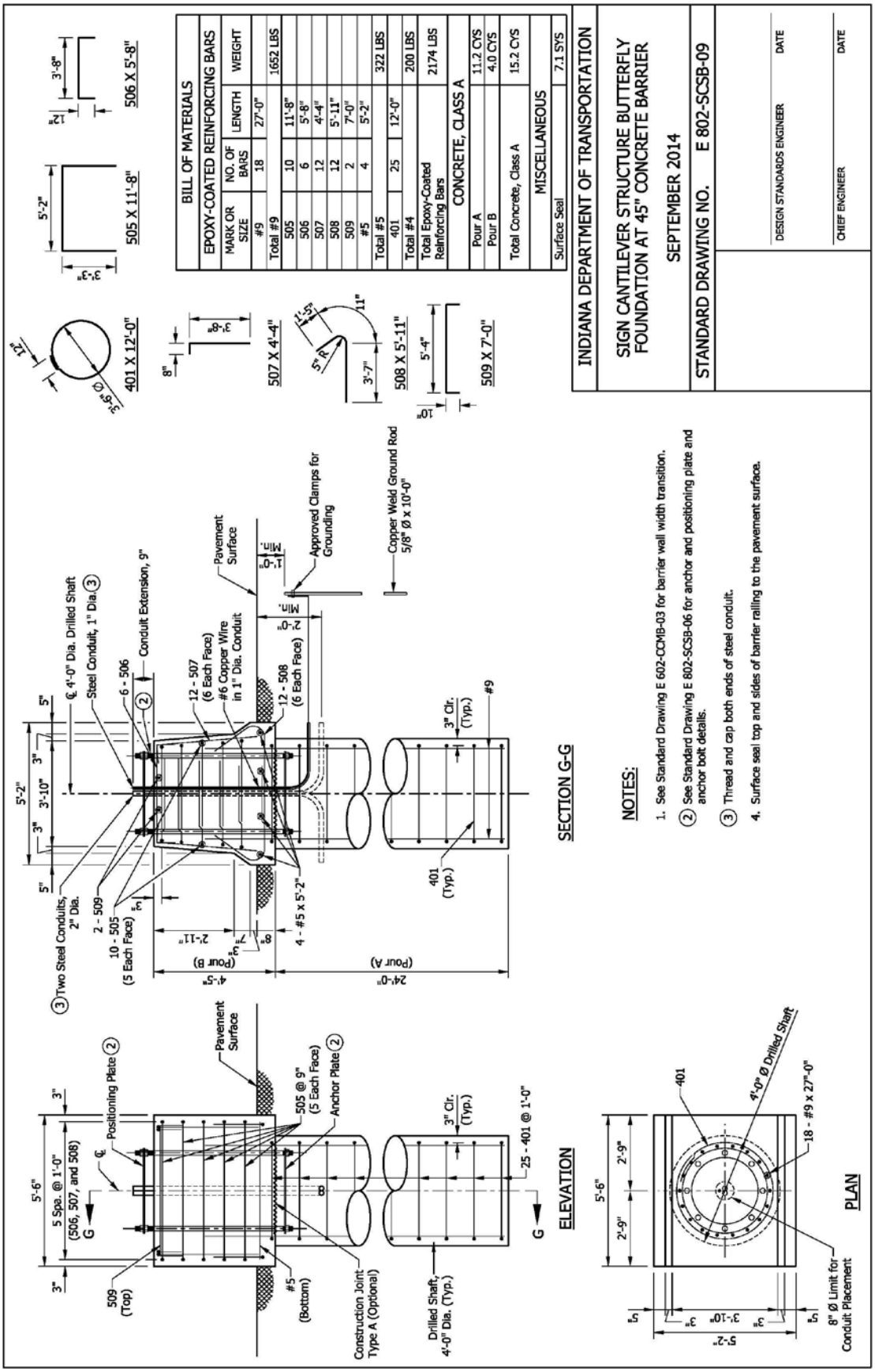

Mr. Trammell
Date: 09/19/13

GENERAL BUSINESS ITEM

2. PROPOSED STANDARDS COMMITTEE SCHEDULE OF MEETINGS, ITEMS SUBMITTALS, AND DISTRIBUTIONS FOR THE YEAR OF 2014

Std Comm Mtg Date	Agenda Items Due [1]	Agenda Distributed & Published	First Draft Minutes Distributed	Comments Due for Draft Minutes	Final Draft Minutes Distributed	Approved Minutes Published
	(-24 days)	(-17days)	(+6 days)	(+13 days)	(+21 days)	(+35-42 days)
12/19/13	11/25/13	12/02/13	12/26/13	01/02/14	01/09/14	01/23/14
01/16/14	12/23/13	12/30/13	01/22/14	01/29/14	02/06/14	02/27/14
02/20/14	01/27/14	02/03/14	02/26/14	03/05/14	03/13/14	03/27/14
03/20/14	02/24/14	03/03/14	03/26/14	04/02/14	04/10/14	04/24/14
04/17/14	03/24/14	03/31/14	04/23/14	04/30/14	05/08/14	05/22/14
5/15/14[2]	04/21/14	04/28/14	05/21/14	05/28/14	06/05/14	06/26/14
06/19/14	05/27/14	06/02/14	06/25/14	07/02/14	07/10/14	07/24/14
07/17/14	04/28/14	06/30/14	07/23/14	07/30/14	08/07/14	08/28/14
08/21/14	07/28/14	08/04/14	08/27/14	09/03/14	09/11/14	09/25/14
09/18/14	08/25/14	09/02/14	09/24/14	10/01/14	10/09/14	10/23/14
10/16/14	09/22/14	09/29/14	10/22/14	10/29/14	11/06/14	12/02/14
11/20/14	10/27/14	11/03/14	11/26/14	12/03/14	12/11/14	12/30/14
12/18/14	11/24/14	12/01/14	12/24/14	12/31/14	01/08/15	1/22/15

[1] Agenda items must be submitted by the due date shown, and be accompanied by a Proposal sheet.

[2] The May meeting is the last opportunity for approval of items to be included in September lettings.

3. Shaded dates are exceptions to regular schedule.

FINAL DRAFT MINUTES

Ms. Phillips
Date: 09/19/13

SPECIFICATION, SPECIAL PROVISIONS AND DRAWINGS
REVISION TO SPECIAL PROVISIONS

PROPOSAL TO STANDARDS COMMITTEE

PROBLEM(S) ENCOUNTERED: Various versions of provisions for heat straightening steel members exist, some of which contain outdated information.

PROPOSED SOLUTION: INDOT desires to incorporate the results of JTRP research on heat straightening steel members into a recurring special provision on heat straightening steel members.

APPLICABLE STANDARD SPECIFICATIONS: None

APPLICABLE STANDARD DRAWINGS: None

APPLICABLE DESIGN MANUAL SECTION: 412

APPLICABLE SECTION OF GIFE: None

APPLICABLE RECURRING SPECIAL PROVISIONS: create RSP 729-B-xxx

PAY ITEMS AFFECTED: create a 729-xxxxx pay item

Submitted By: Elizabeth Phillips

Title: Supervisor, Standards & Policy

Organization: INDOT

Phone Number: 232-6775

Date: July 3, 2013

APPLICABLE SUB-COMMITTEE ENDORSEMENT: ad hoc committee consisting of Elizabeth Phillips, Jim Reilman, George Snyder, & Danny Wampler.

FINAL DRAFT MINUTES

REVISION TO SPECIAL PROVISIONS

PROPOSED NEW 729-B-XXX FIELD STRAIGHTENING OF STEEL MEMBERS

729-B-xxx HEAT STRAIGHTENING OF STEEL MEMBERS IN THE FIELD

(Adopted XX-XX-13)

The Standard Specifications are revised as follows:

SECTION 729, BEGIN LINE 1, DELETE AND INSERT AS FOLLOWS:

SECTION 729 – ~~BLANK~~*HEAT STRAIGHTENING OF STEEL MEMBERS IN THE FIELD*

729.01 Description

This work shall consist of field- repairing damaged steel members by the planned and supervised application of limited amounts of localized heat in accordance with 105.03. It shall include furnishing and installing or removing structural steel materials, as directed, in accordance with 105.03.

MATERIALS

729.02 Materials

Materials shall be in accordance with the following:

Organic Zinc Primer .....909.02(a)2
Structural Steel.....910.02
Waterborne Finish Paint.....909.02(d)

CONSTRUCTION REQUIREMENTS

729.03 Pre-Heat Straightening Inspection

Damaged steel members shall be inspected by the Engineer and Contractor for impact damage such as but not limited to gouges, sharp dents, cracks, or other damage resulting from the impact prior to any other work related to heat straightening commencing. All areas identified as having impact damage shall have the paint removed by using only a chemical-based paint-stripping product. Power tool cleaning, hand tool cleaning, or any other method to remove paint shall not be used. The steel members in the areas identified as having impact damage shall be checked for fine cracks using liquid dye penetration in accordance with ASTM E 165 or magnetic particle testing in accordance with ASTM E 709.

729.04 Contractor's Work Plan

Upon completion of the pre-heat straightening inspection, the Contractor shall submit a written work plan for the following:

(a) cleaning the work area and any other areas of concern discovered during the pre-heat straightening inspection;

(b) types of heat patterns at each location and sequences;

(c) jacking or other means used to augment the heat straightening process. Detailed information on the method used and the proposed force measurement system shall be included. The force measurement system shall have been calibrated within the past 12 months;

(d) disconnecting, supporting, and adjusting steel members, as required;

FINAL DRAFT MINUTES

(e) cleaning method and painting system to be used following the heat straightening.

The Contractor shall receive written approval of the work plan from the Engineer prior to beginning any work described in the work plan.

729.05 Grinding

After the damaged areas have been checked for cracks or other damage as outlined above, all gouges, tears, and sharp dents shall be ground smooth. Cracks discovered in the pre-heat straightening inspection shall be ground out by excavating the crack into a dish-like shape, the sides of which shall approximate a 3:1 taper. If the crack is not removed after grinding approximately a 1/8 in. depth of steel or if prior to grinding, the crack appears to be excessively long, deep or wide, the Engineer shall be notified prior to any grinding. Under no circumstances shall the cracks be v-grooved, filled with welding material, and then ground smooth.

729.06 Surface Preparation of Area to be Heated

Before cutting or heating any steel member, paint shall be removed from inside the limits of the heat straightening area. Surface preparation shall be in accordance with 619.08(a), 619.08(b), and either 619.08(d) or 619.08(g). Hand tool cleaning or brush-off blast cleaning shall not be used.

729.07 Equipment

All gas fueled heating equipment, force application devices, and accessories shall be supplied by the Contractor. Fuel for heating shall be an oxygen-fuel mixture. The fuel shall be acetylene, natural gas, or propane.

Heat application shall be by a torch designed for heating, not cutting, with single-orifice tips only, unless otherwise specified herein. The size of the tip shall be proportional to the thickness of the heated material. As a guide, the tip size is shown in the following table:

Steel Member Thickness, t (in.)	*Orifice Size*
$t \leq 1/4$	3
$1/4 < t \leq 3/8$	4
$3/8 < t \leq 1/2$	5
$1/2 < t \leq 5/8$	7
$5/8 < t \leq 7/8$	8
$t > 7/8$ in.	*
* *multiple torches, rosebud, or multiple orifice tips may be used*	

729.08 Suspension of Work

If adverse weather conditions such as ~~but not limited to, thunderstorms,~~ rain, snow, or hail arise, or anything else causing unexpected or sudden cooling of the heated members, the Engineer may order the suspension of work. If a suspension of work is ordered, the Contractor shall immediately cease applying heat to the steel members. The suspension of work will only apply while adverse weather conditions exist at the project location. The Contractor shall not recommence work until directed by the Engineer.

729.09 Heat Application and Heat Patterns

The Contractor shall identify, by measurements, all yield zones and yield lines prior to starting heat straightening. The temperature of the steel member within a heat pattern

FINAL DRAFT MINUTES

during any heat straightening cycle shall be between the minimum and maximum temperature values for the respective type of steel shown in the table below.

Temperature, °F		*Type of Steel Shown on the Plans (ASTM Classification Shown)*
Minimum	*Maximum*	
850	*950*	*A 709, grade HPS 100W*
900	*1000*	*A 709, grade 70W; A 709, grade HPS 50W; A 709, grade HPS 70W; A 852; A 913*
950	*1050*	*A 514; A 709, grade non-HPS 100/100W*
1100	*1200*	*A 7; A 36; A 242; A 373; A 440; A 441; A 529; A 572; A 588; A 709, grades 36, 50, 50S, and 50W; A 992*

Temperatures outside the limits specified above will be cause for rejection and replacement of the steel member.

The Contractor shall provide and use one or more of the following devices to verify temperatures during heat straightening:

(a) Pyrometer
(b) Infrared non-contact thermometer

The devices shall be calibrated every 12 months. Heat application shall not be performed unless at least one of the devices listed above is being used to verify the temperature of the steel member. Heat patterns and sequences shall be selected to match the type of damage and cross section shape.

Heat shall be applied within an included angle of 15 to 55 degrees, but limited to a base width of 12 in. Sufficient number of heat patterns shall be used to eliminate chording effects, where chording effects are defined as straightening small portions of the damaged steel member. Each heat pattern shall be heated in a single pass. The entire heat pattern shall not be reheated until the steel member has cooled below 250 °F. Only cooling with clean, dry air will be permitted. Cooling with compressed air will only be permitted after the steel member has cooled naturally to 600 °F. When the steel member thickness exceeds 1 in., two torches shall be used simultaneously to heat both sides of the heat pattern. The torches shall be located one above the other throughout the heating process.

The number, location, and sequence of the areas to be heated shall be marked on the steel members. The following heat patterns shall be used:

(a) edge heats,
(b) line heats,
(c) spot heats,
(d) strip heats,
(e) vee heats.

Heat pattern boundaries shall be marked with soapstone. In no case shall heat be applied to undamaged portions of the steel member.

FINAL DRAFT MINUTES

When using vee heats, the heat pattern shall be located on the convex side of the steel member; heat pattern edges shall not overlap and shall be greater than the width of the bottom flange element apart. The apex of the vee should be truncated to an approximate 1 in. width at the junction of the web and flange with the boundaries extending to the edge of the flange. Once the desired temperature of the steel member has been obtained, heating shall progress in a serpentine motion from the apex of the vee toward the base of the vee in a single pass.

729.10 Application of Restraining Forces

Restraining forces shall not be applied without acceptable force measurement systems in place. Force measurement devices shall be calibrated every 12 months. Jacks or come-alongs, not exceeding 25 t capacity, may be used to put steel members into limited compression as a means of mechanically augmenting the heat straightening process. The load shall be applied prior to the application of heat. The load shall not be increased during the heat cycle. After a number of heat cycles and the steel member has cooled below 250°F, the load may be adjusted to compensate for the effects of the heat cycles. Any section of the steel member that becomes distorted, cracked, or permanently deformed due to methods of handling, supporting, and loading or by any other means shall be replaced or repaired as determined by the Engineer.

729.11 Tolerances

The steel member shall be straightened to within the following tolerances:

Criteria	*Tolerance*
Horizontal Sweep	*3/8 in. per every 20 ft of length*
Horizontal Sweep at the point of impact	*3/8 in. per every 5 ft of length, or 1/2 in. per every 8 ft of length*
Vertical Deflection	*1/4 in. maximum*
Deflection of Web (out of plane of web)	*1/4 in. maximum in both the vertical and horizontal direction*

Tolerances shall be achieved before cross frames, diaphragms, or any other lateral restraint devices are attached. In no case shall the steel member be forced into position and then welded or bolted to the cross frames or diaphragms to hold the steel member in position.

729.12 Post-Heat Straightening Inspection

Following the completion of steel member straightening, the straightened steel member shall be inspected by the Engineer and the Contractor. The inspection shall be performed using the same methods and procedures used in the pre-heat straightening inspection. When the Engineer deems additional structural repairs are required, additional work shall be in accordance with 109.05.

729.13 Epoxy Injection

If the top flange of the steel member has pulled away from and is no longer in contact with the concrete bridge deck, the resultant void shall be completely filled by epoxy injection in accordance with 727 after completion of all of the steel member straightening and repairs.

FINAL DRAFT MINUTES

REVISION TO SPECIAL PROVISIONS

PROPOSED NEW 729-B-XXX FIELD STRAIGHTENING OF STEEL MEMBERS

729.14 Painting

Upon completion and acceptance of the heat straightened steel members, the Contractor shall clean, prime, and paint the steel members. Surface preparation shall be in accordance with 729.06. The paint system shall be in accordance with 619.09(b). Painting shall be in accordance with 619.10. All exposed surfaces on heat-straightened steel members shall be fully painted from the edge of the nearest splice plate or steel member end outside the heat straightened area to the nearest splice plate or steel member end on the other side of the heat straightened area. The color of the top coat shall be a similar color to match the color of the existing bridge.

729.15 Method of Measurement

This work will not be measured for payment.

729.16 Basis of Payment

The accepted heat straightened steel members will be paid for at the contract lump sum price for straighten steel member.

Payment will be made under:

Pay Item	***Pay Unit Symbol***
Straighten Steel Member	*LS*

The cost for all material, labor, equipment, and incidentals for the inspection of the steel members, the temperature verification devices, calibration of the temperature verification devices, and removal of any cracks shall be included in the cost of straighten steel member.

The cost for all materials, labor, equipment, and incidentals necessary for disconnecting, supporting, or adjusting the steel members or secondary steel members, jacks or other augmenting devices, the force measurement system, and calibration of the force measurement system shall be included in the cost of straighten steel member.

The cost for all materials, labor, equipment, and incidentals required for preparing, priming, and painting of the steel members shall be included in the cost of straighten steel member.

If the Engineer deems it necessary for the Contractor to perform epoxy injection as outlined above, this extra work will be paid for in accordance with 109.05.

If, as a result of the Contractor's methods used in the prosecution of the work, the integrity of the steel member has been compromised as determined by the Engineer, all costs to remedy the situation up to and including replacing of the steel members and all costs associated with replacing the steel members shall be at no additional cost to the Department.

FINAL DRAFT MINUTES

Ms. Phillips
Date: 09/19/13

COMMENTS AND ACTION

729-B-XXX FIELD STRAIGHTENING OF STEEL MEMBERS

DISCUSSION: This item was introduced and presented by Ms. Phillips who explained the need for a provision for heat straightening of structural steel members in the field. Further input was provided by Mr. Reilman, who expressed the importance of being able to use heat straightening methods in the field. Mr. Reilman explained the results of the JTRP study which offered input as to how many times the steel can be heat straightened without compromising the integrity of the steel.

Mr. Walker inquired about testing and quality control, and Mr. Reilman explained the revisions made to the Unique Special Provision and that some items will be dealt with during the pre-qualification process. Mr. Keefer asked about the weather conditions and requirements and Mr. Reilman agreed that it needs further clarification. The revised language is as shown in 729.08 above. Mr. Reilman further explained the details behind the provision as presented.

Mr. Keefer asked how this will apply to 711.11 and Mr. Reilman explained that 711 applies to straightening materials in the shop, not in the field for existing structures. Further discussion ensued as to the painting of the straightened areas with regard to 619.08. The designer can address the 180 SFT requirement and make any needed changes which would be unique to that particular contract.

The titles were also revised by the committee.

The motion was revised by Ms. Phillips and seconded by Mr. Keefer.

This provision may be revisited in the future for inclusion in the 2016 book.

FINAL DRAFT MINUTES

Motion: Ms. Phillips Second: Mr. Keefer Ayes: 9 Nays: 0	Action: ____ Passed as Submitted _X_ Passed as Revised _____ Withdrawn
Standard Specifications Sections affected: SECTION 729- BLANK Recurring Special Provision affected: PROPOSED NEW Standard Sheets affected: NONE Design Manual Sections affected: NONE GIFE Sections cross-references: NONE	_____ 2016 Standard Specifications Book _____ Revise Pay Items List _X_ Create RSP (No.729-B-204) Effective December 01, 2013 Letting RSP Sunset Date: TBD _____ Revise RSP (No._____) Effective _____ Letting RSP Sunset Date: _____ Standard Drawing Effective _____ _____ Create RPD (No. _____) Effective _____ Letting _____ Technical Advisory GIFE Update Req'd.? Y ___ N ___ By _____ Addition or _____ Revision Frequency Manual Update Req'd? Y___N___ By _____ Addition or _____ Revision Received FHWA Approval? YES

STANDARD SPECIFICATIONS, PROVISIONS AND DRAWINGS
REVISION TO STANDARD DRAWINGS

PROPOSAL TO STANDARDS COMMITTEE

PROBLEM(S) ENCOUNTERED: Sign and signal cantilever structure welding details in certain locations (base plate, arm connection) are not practical to do as shown on current standard drawings. In addition, diameter of base plate hole for anchor bolts in sign cantilever drawing is not consistent with manufacturing practice.

PROPOSED SOLUTION: Revise the welding details (still meeting AASHTO requirements) and change anchor bolt hole diameter from 2 5/16" to 2 1/4" .

APPLICABLE STANDARD SPECIFICATIONS: N/A

APPLICABLE STANDARD DRAWINGS: 802-SCLS-12; 805-TSCS-02, 05, 09 and 11

APPLICABLE DESIGN MANUAL SECTION: N/A

APPLICABLE SECTION OF GIFE: N/A

APPLICABLE RECURRING SPECIAL PROVISIONS: N/A

PAY ITEMS AFFECTED: N/A

Submitted By: David Boruff

Title: Manager, Office of Traffic Administration

Organization: INDOT

Phone Number: 317 234 7975

Date: 9-03-2013

APPLICABLE SUB-COMMITTEE ENDORSEMENT: Industry, Traffic Structure Design Consultant

FINAL DRAFT MINUTES

REVISION TO STANDARD DRAWINGS

802-SCLS-12 SIGN CANTILEVER STRUCTURE DOUBLE ARM AND QUADRI-CHORD BASE PLATE, ANCHOR BOLT, AND METAL SKIRT DETAILS (WITH MARKUPS)

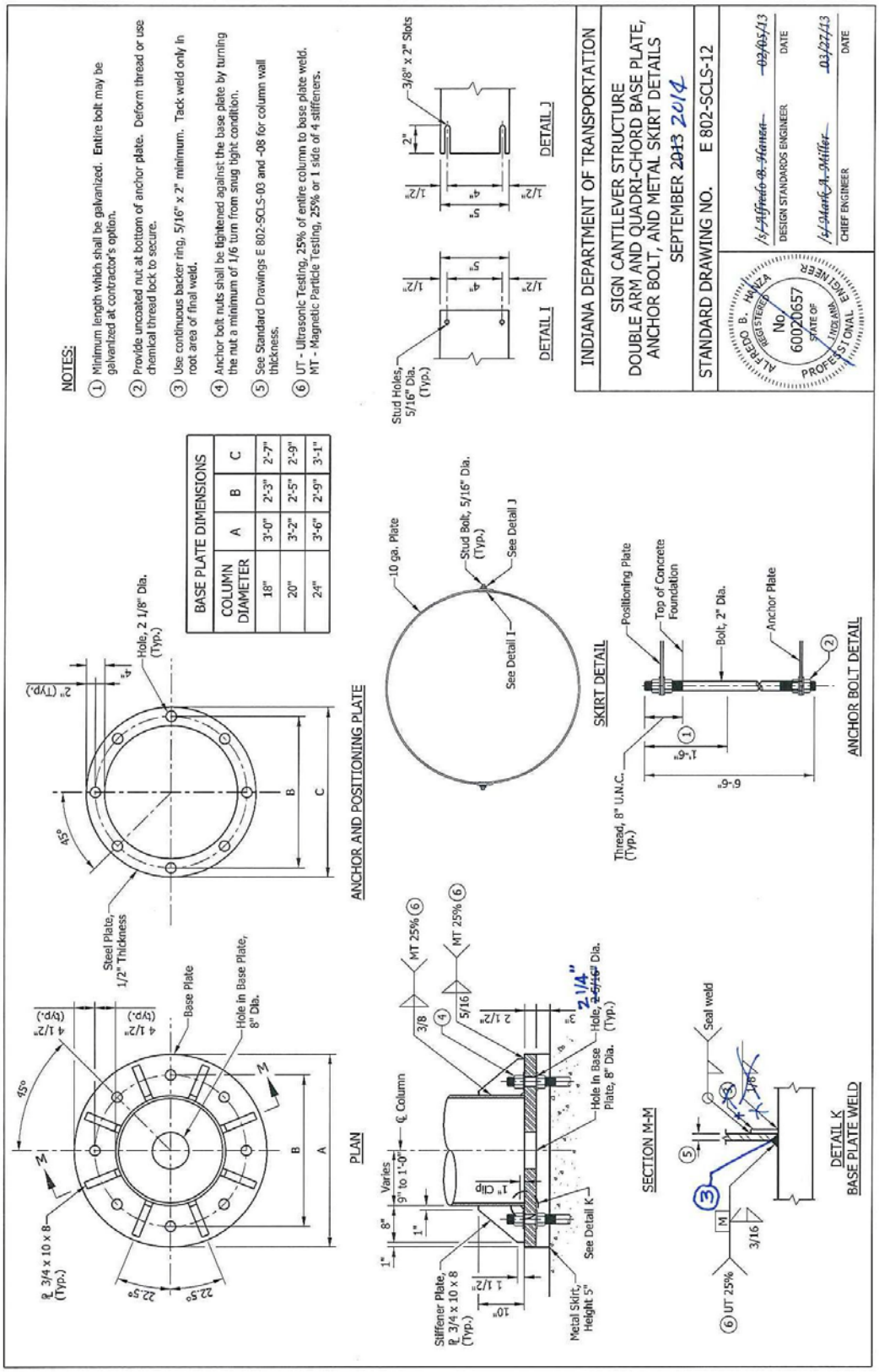

REVISION TO STANDARD DRAWINGS

802-SCLS-12 SIGN CANTILEVER STRUCTURE DOUBLE ARM AND QUADRI-CHORD BASE PLATE, ANCHOR BOLT, AND METAL SKIRT DETAILS (DRAFT)

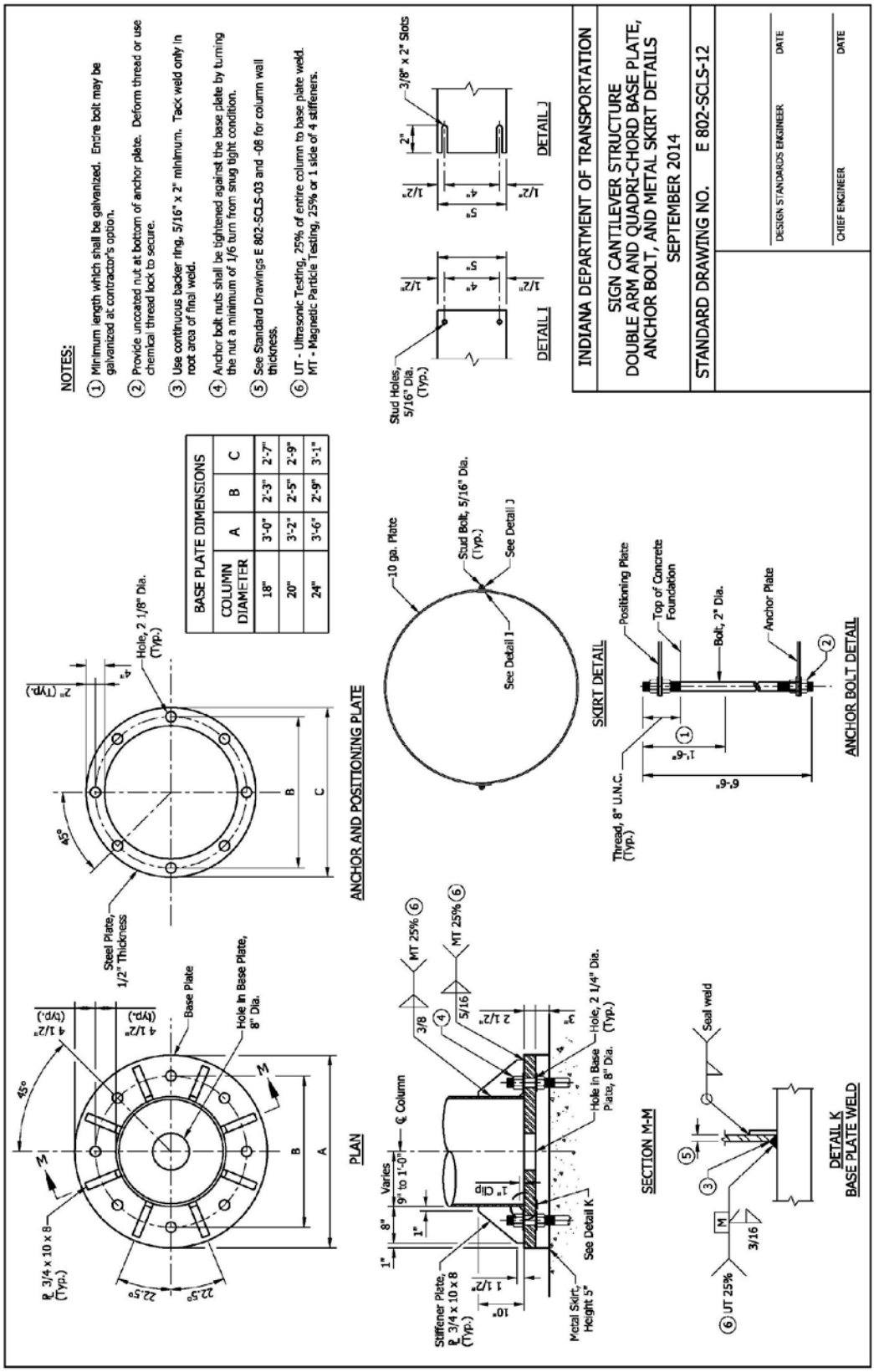

REVISION TO STANDARD DRAWINGS

805-TSCS-02 TRAFFIC SIGNAL CANTILEVER STRUCTURE SINGLE SIGNAL ARM POLE ELEVATION, DIMENSIONS, AND BASE PLATE WELD DETAILS (WITH MARKUPS)

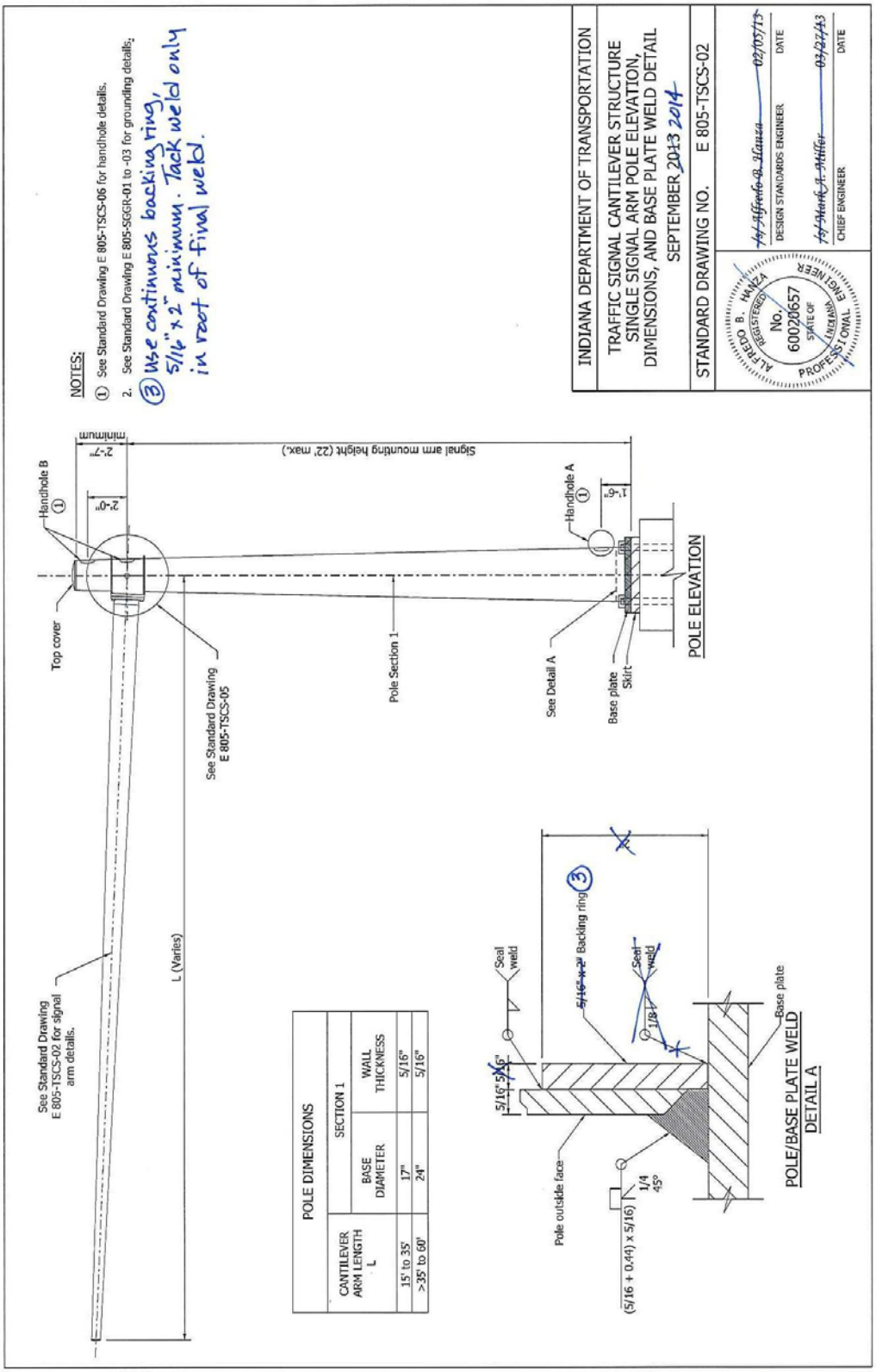

REVISION TO STANDARD DRAWINGS

805-TSCS-02 TRAFFIC SIGNAL CANTILEVER STRUCTURE SINGLE SIGNAL ARM POLE ELEVATION, DIMENSIONS, AND BASE PLATE WELD DETAILS (DRAFT)

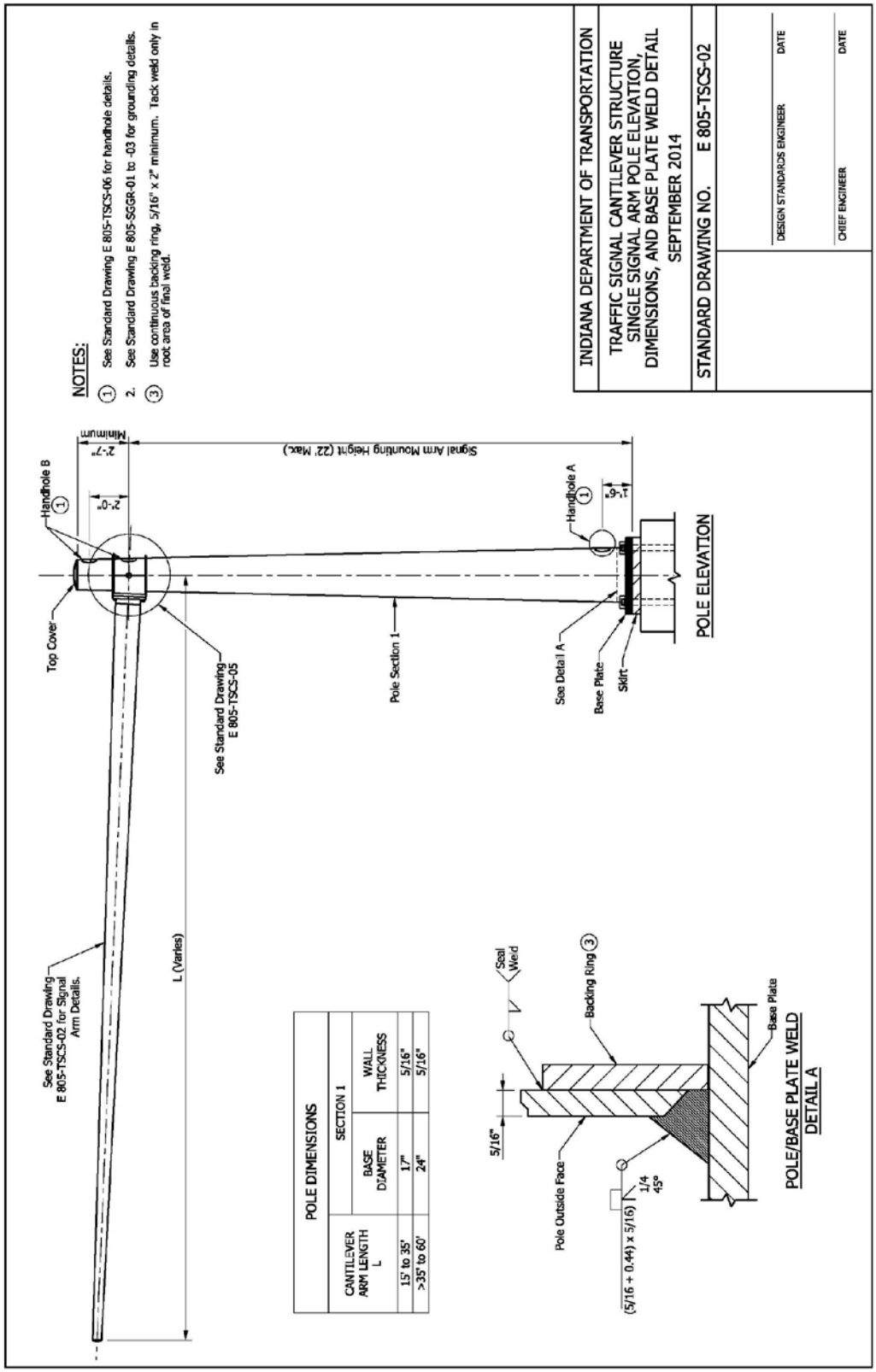

REVISION TO STANDARD DRAWINGS

805-TSCS-05 TRAFFIC SIGNAL CANTILEVER STRUCTURE SIGNAL ARM CONNECTION DETAILS (WITH MARKUPS)

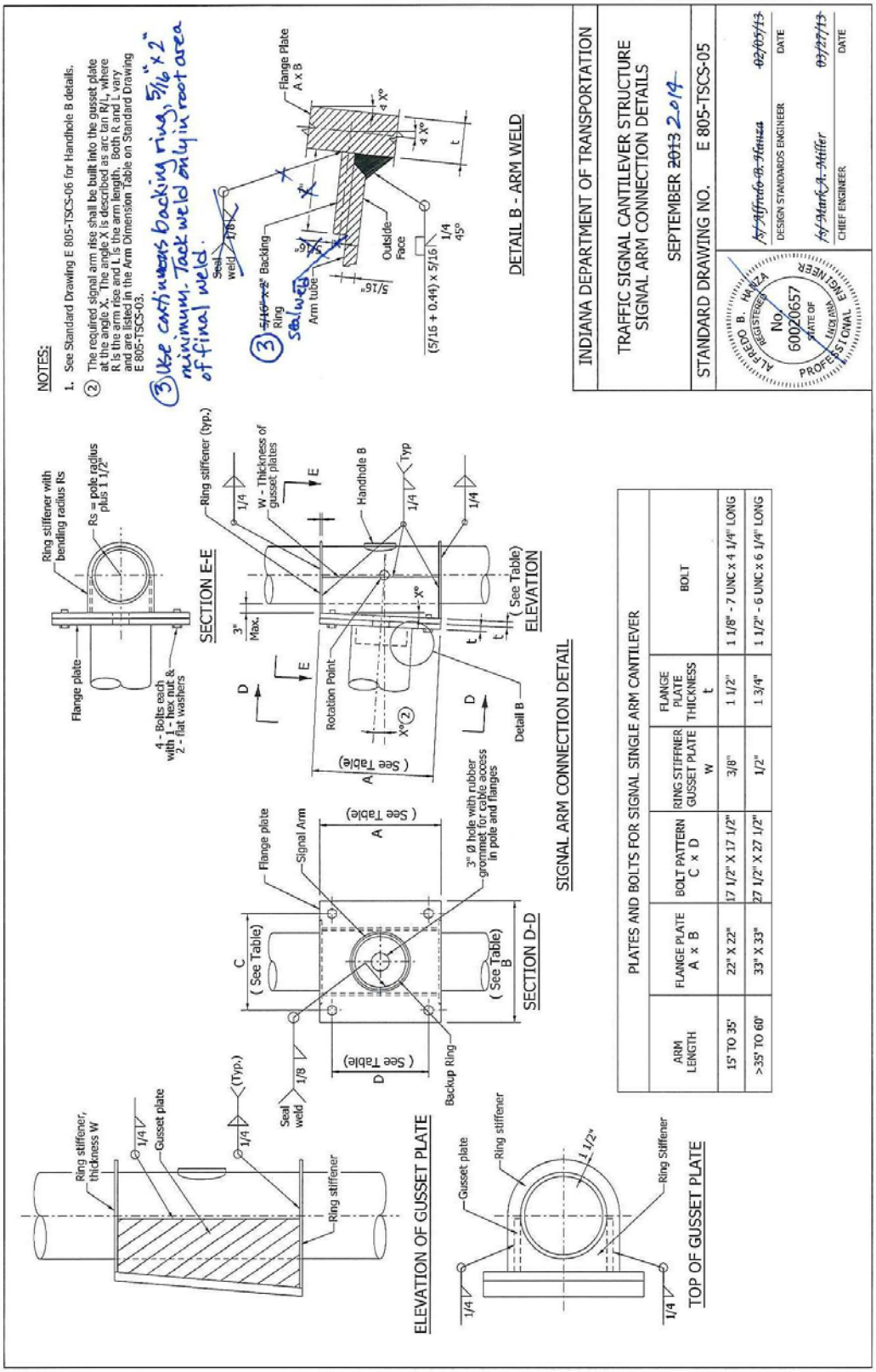

PLATES AND BOLTS FOR SIGNAL SINGLE ARM CANTILEVER

ARM LENGTH	FLANGE PLATE A x B	BOLT PATTERN C x D	RING STIFFNER GUSSET PLATE W	FLANGE PLATE THICKNESS t	BOLT
15' TO 35'	22" X 22"	17 1/2" X 17 1/2"	3/8"	1 1/2"	1 1/8" - 7 UNC x 4 1/4" LONG
>35' TO 60'	33" X 33"	27 1/2" X 27 1/2"	1/2"	1 3/4"	1 1/2" - 6 UNC x 6 1/4" LONG

REVISION TO STANDARD DRAWINGS

805-TSCS-05 TRAFFIC SIGNAL CANTILEVER STRUCTURE SIGNAL ARM CONNECTION DETAILS (DRAFT)

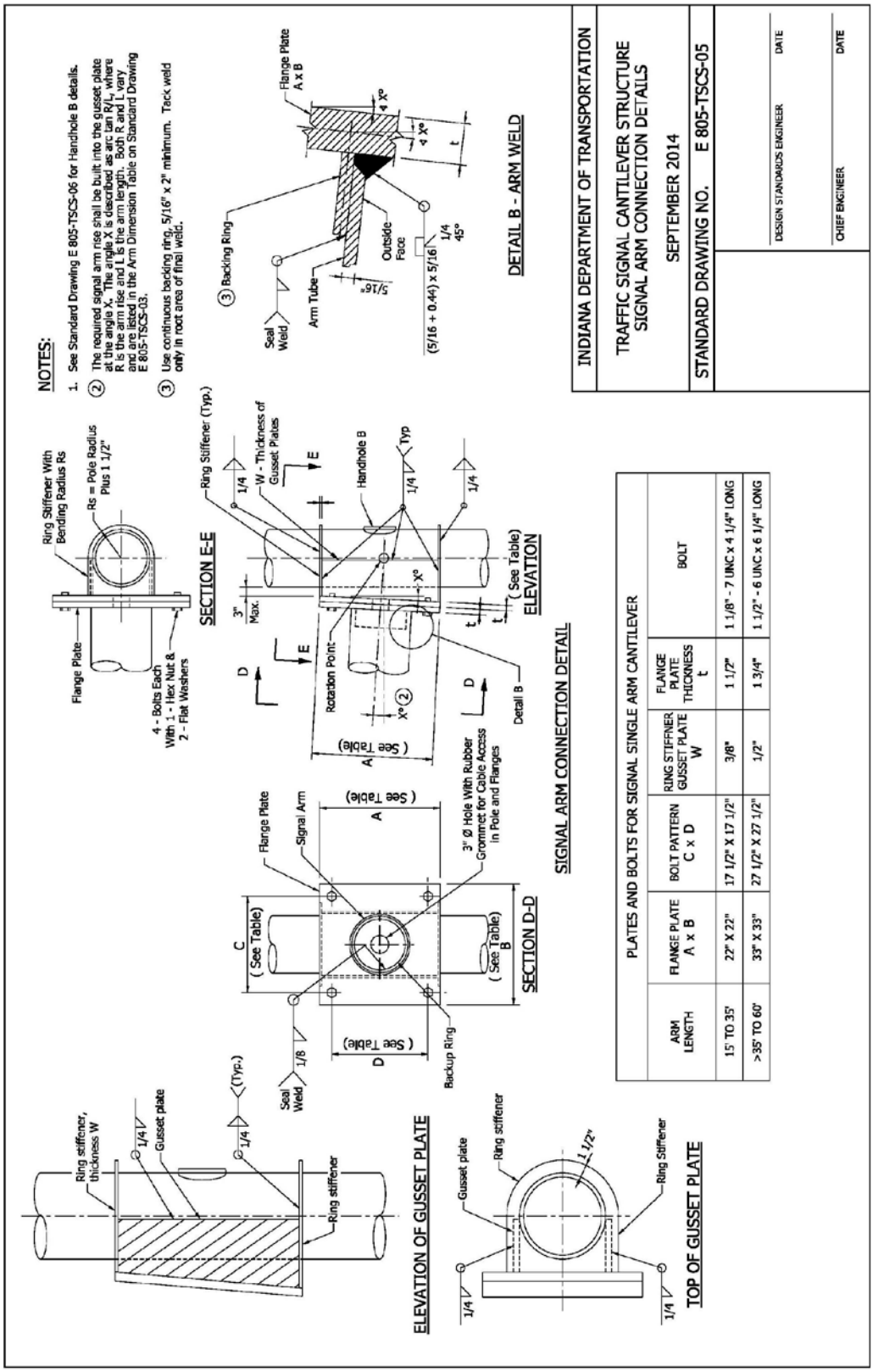

PLATES AND BOLTS FOR SIGNAL SINGLE ARM CANTILEVER

ARM LENGTH	FLANGE PLATE A x B	BOLT PATTERN C x D	RING STIFFNER GUSSET PLATE W	FLANGE PLATE THICKNESS t	BOLT
15' TO 35'	22" X 22"	17 1/2" X 17 1/2"	3/8"	1 1/2"	1 1/8" - 7 UNC x 4 1/4" LONG
>35' TO 60'	33" X 33"	27 1/2" X 27 1/2"	1/2"	1 3/4"	1 1/2" - 6 UNC x 6 1/4" LONG

REVISION TO STANDARD DRAWINGS

805-TSCS-09 TRAFFIC SIGNAL CANTILEVER STRUCTURE COMBINATION POLE ELEVATION, DIMENSIONS, AND BASE PLATE WELD DETAILS (WITH MARKUPS)

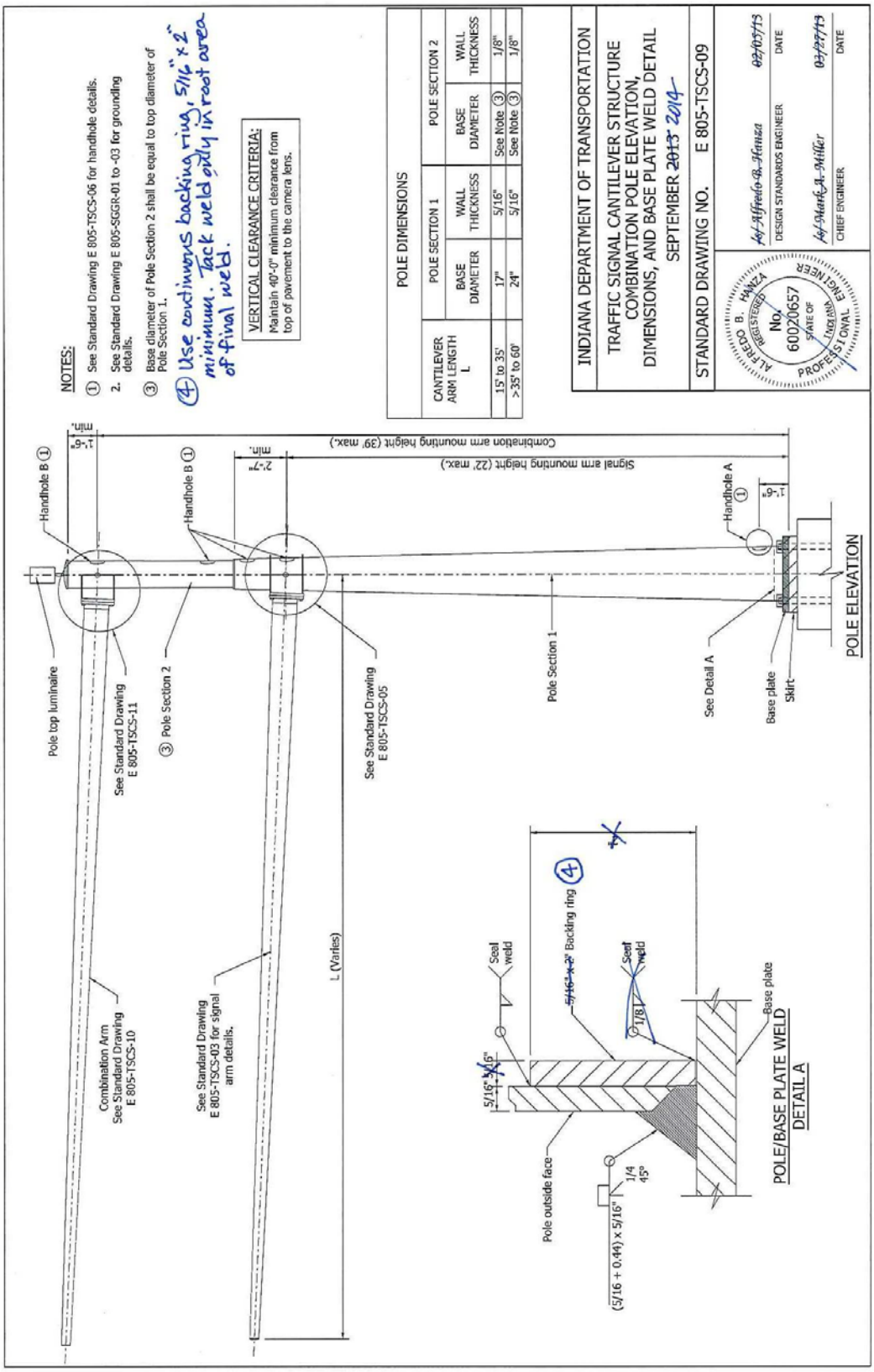

REVISION TO STANDARD DRAWINGS

805-TSCS-09 TRAFFIC SIGNAL CANTILEVER STRUCTURE COMBINATION POLE ELEVATION, DIMENSIONS, AND BASE PLATE WELD DETAILS (DRAFT)

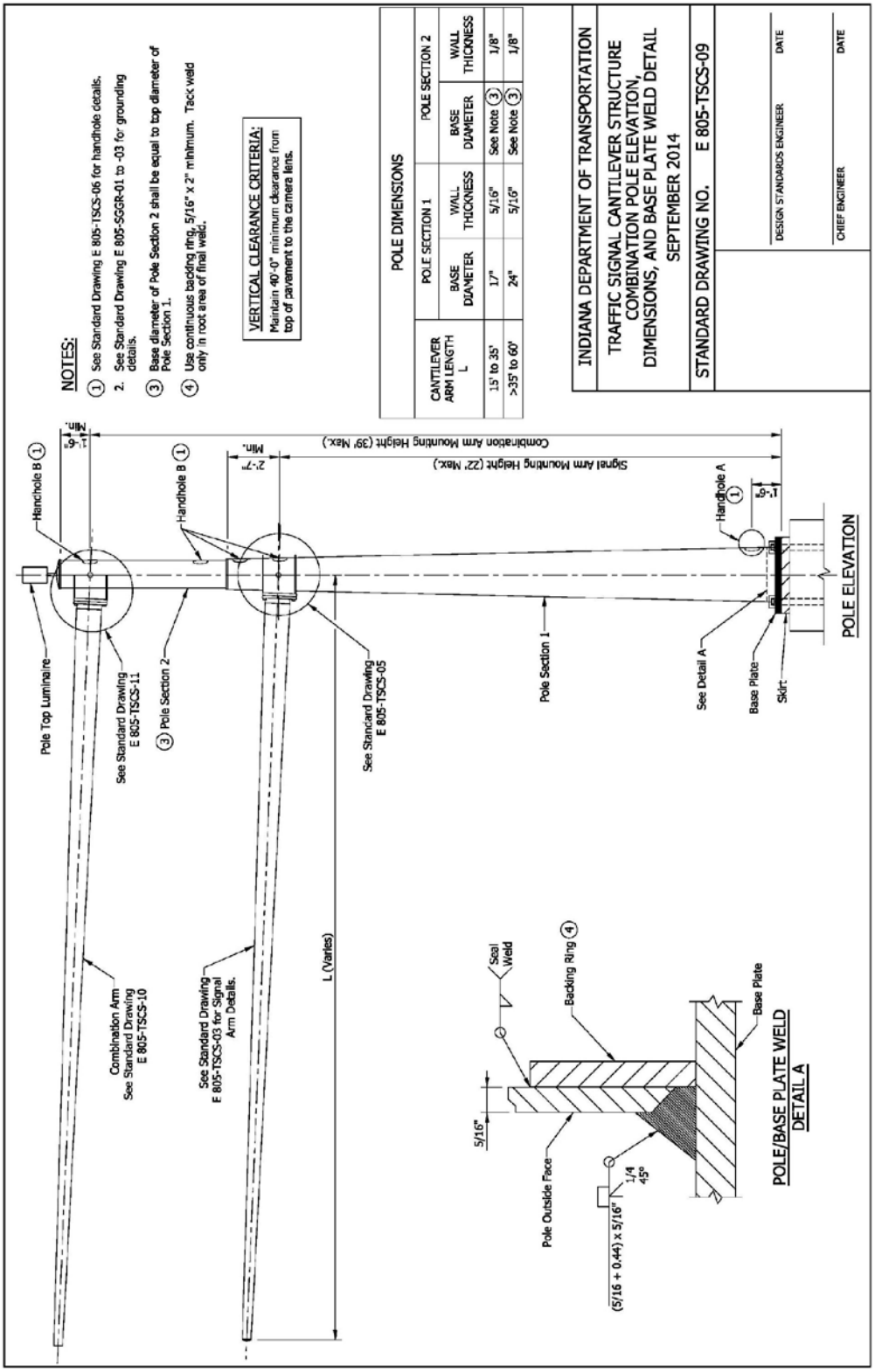

REVISION TO STANDARD DRAWINGS

805-TSCS-11 TRAFFIC SIGNAL CANTILEVER STRUCTURE COMBINATION ARM CONNECTION DETAILS (WITH MARKUPS)

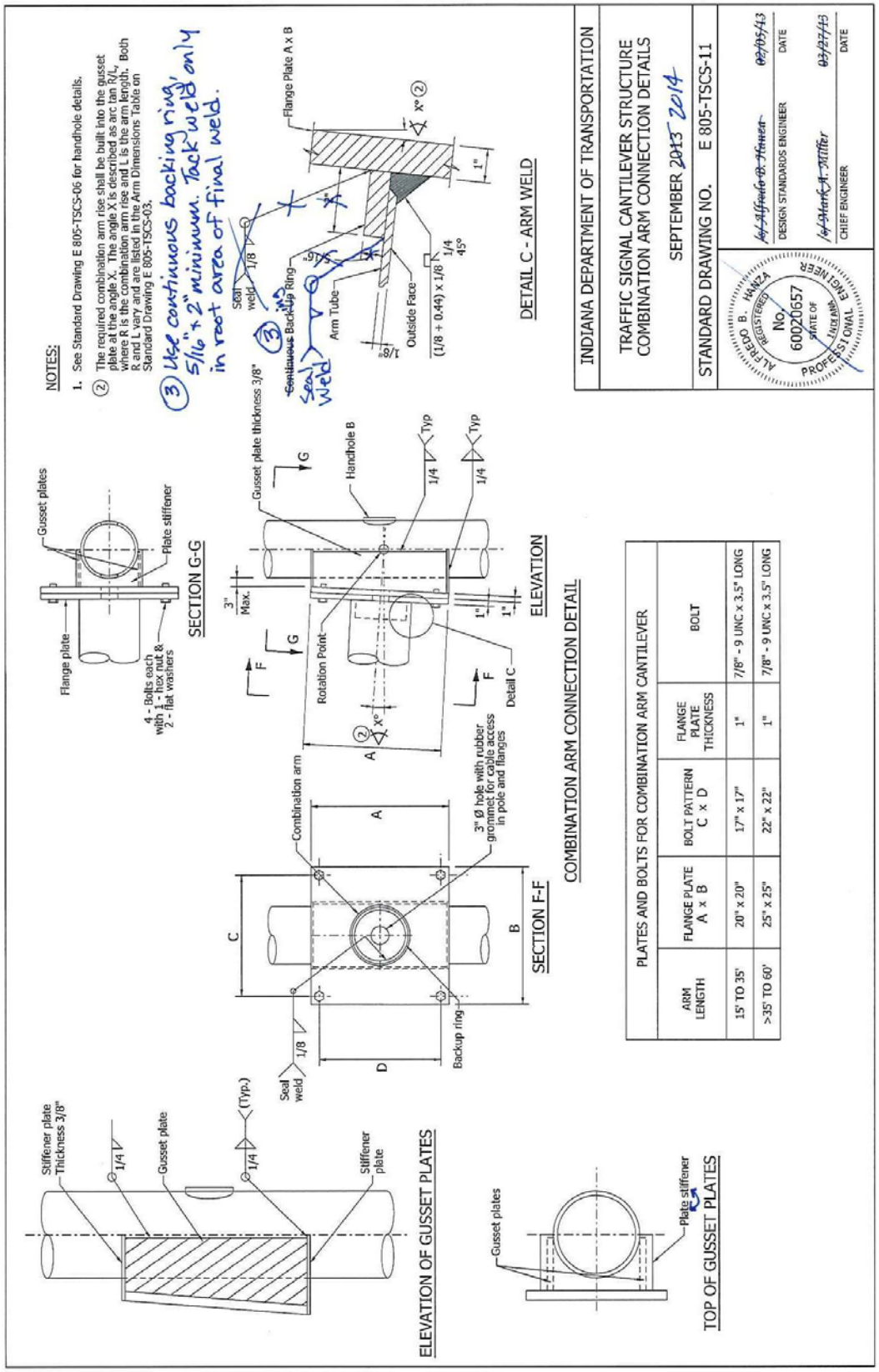

PLATES AND BOLTS FOR COMBINATION ARM CANTILEVER				
ARM LENGTH	FLANGE PLATE A x B	BOLT PATTERN C x D	FLANGE PLATE THICKNESS	BOLT
15' TO 35'	20" x 20"	17" x 17"	1"	7/8" - 9 UNC x 3.5" LONG
>35' TO 60'	25" x 25"	22" x 22"	1"	7/8" - 9 UNC x 3.5" LONG

REVISION TO STANDARD DRAWINGS

805-TSCS-11 TRAFFIC SIGNAL CANTILEVER STRUCTURE COMBINATION ARM CONNECTION DETAILS (DRAFT)

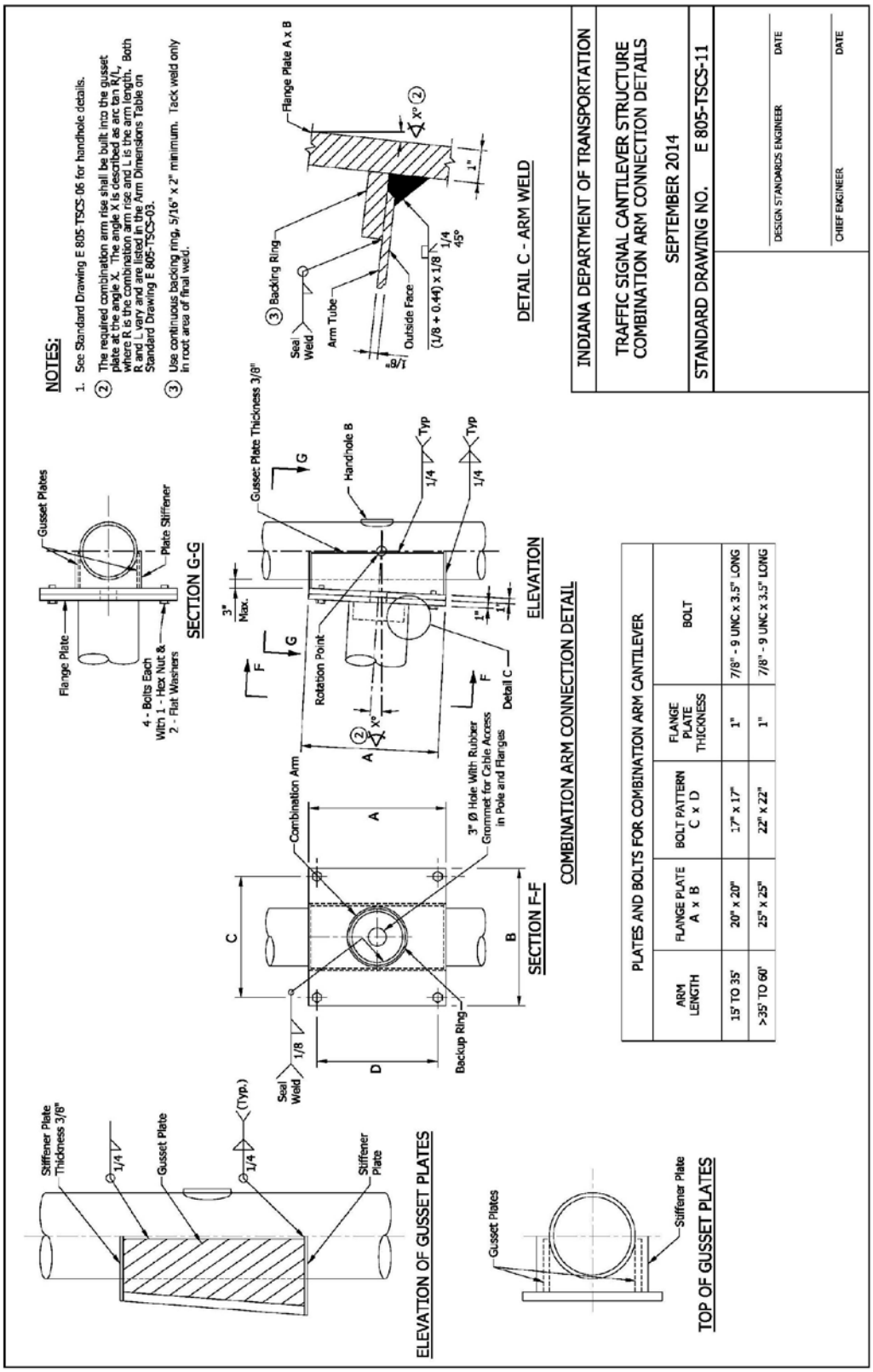

COMMENTS AND ACTION

802-SCLS-12 SIGN CANTILEVER STRUCTURE, 805-TSCS-02, -05, -09 AND -11 TRAFFIC SIGNAL CANTILEVER STRUCTURE

DISCUSSION: This item was introduced and presented by Mr. Boruff who expressed the need to revise the shown current standard drawings to reflect current manufacturing practice and AASHTO requirements. These revisions also coincide with previously approved revisions to the last meetings minutes.

Mr. Boruff briefly explained the revisions shown. There was no further discussion and this item was approved as submitted.

FINAL DRAFT MINUTES

Motion: Mr. Boruff Second: Ms. Phillips Ayes: 9 Nays: 0	Action: X Passed as Submitted ____ Passed as Revised ____ Withdrawn
Standard Specifications Sections affected: NONE Recurring Special Provision affected: NONE Standard Sheets affected: 802-SCLS-12, 805-TSCS-02, -05, -09 AND -11. Design Manual Sections affected: NONE GIFE Sections cross-references: NONE	____ 2016 Standard Specifications Book _____ Revise Pay Items List ____ Create RSP (No.____) Effective ____ Letting RSP Sunset Date: ____ _____ Revise RSP (No._____) Effective _____ Letting RSP Sunset Date: _____ Standard Drawing Effective September, 2014 X Create RPD (No.)802-T-199d and 805-T-200d Effective December 01, 2013 Letting _____ Technical Advisory GIFE Update Req'd.? Y ____ N ____ By _____ Addition or _____ Revision Frequency Manual Update Req'd? Y____N____ By _____ Addition or _____ Revision Received FHWA Approval? YES

SPECIFICATION, SPECIAL PROVISIONS AND DRAWINGS
REVISION TO STANDARD SPECIFICATIONS

PROPOSAL TO STANDARDS COMMITTEE

PROBLEM(S) ENCOUNTERED: Double chip seal emulsion application rates stated in section 404 require approximately 60% of the total emulsion demand to be placed on the bottom layer; Industry emulsion manuals as well as the Asphalt Handbook specifically recommend approximately 40% of the total emulsion demand to be placed on the bottom layer.

The Department has only recently begun to construct double chip seals on mainline and problems have occurred on SR-58 in the Vincennes District as well as on SR-252 in the Seymour District. The 60% total emulsion rates on the bottom layer has produced too much oil that has caused bleeding thru to the top layer; corrections to date have had to include milling the surface to restore friction.

PROPOSED SOLUTION: Keep the total emulsion demand as currently stated in section 404 but change the percentages to 40% of the total emulsion for the bottom layer and 60% of the total emulsion for the top layer.

APPLICABLE STANDARD SPECIFICATIONS: 404

APPLICABLE STANDARD DRAWINGS: N/A

APPLICABLE DESIGN MANUAL SECTION: N/A

APPLICABLE SECTION OF GIFE: N/A

APPLICABLE RECURRING SPECIAL PROVISIONS: N/A

PAY ITEMS AFFECTED: Seal Coat, SYS

Submitted By: Michael Prather & Michael Buening

Title: Area Pavement Engineer

Phone Number: 234-8250, 232-5242

Date: 09/03/13

APPLICABLE SUB-COMMITTEE ENDORSEMENT: Ad-Hoc committee comprised of Michael Buening, Jason Lowther, Bill Tompkins, and Adam Redman of Asphalt Materials.

FINAL DRAFT MINUTES

REVISION TO STANDARD SPECIFICATIONS

SECTION 404- SEAL COAT
404.04 COVER AGGREGATE

(Proposed revision shown highlighted gray)

The Standard Specifications are revised as follows:

SECTION 404, BEGIN LINE 21, DELETE AND INSERT AS FOLLOWS:

404.04 Cover Aggregate

Aggregate shall be in accordance with the following requirements. When slag is used as an alternate to natural aggregate, adjustments will be made in accordance with 904.01, to compensate for differences in specific gravity.

Coarse Aggregates, Class B or Higher
Size No. 8, 9, 11, or 12 904
Fine Aggregate, Size No. 23 or 24.....904

The types of seal coats shall be as follows:

Type (see Note 1)	Application	Cover Aggregate Size No. and Course	Rates of Application per sq yd	
			Aggregate, lb	Asphalt Material, Gal. at 60°F
1 or 1P (see Note 2)	Single	23, 24	12 - 15	0.12 - 0.16
2 or 2P	Single	12	14 - 17	0.29 - 0.33
3 or 3P	Single	11	16 - 20	0.36 - 0.40
4 or 4P	Single	9	28 - 32	0.63 - 0.68
5 or 5P	Double	Top: 12 Bottom: 11	16 – 19 16 - 20	~~0.33 - 0.37~~*0.41 – 0.46* ~~0.36 - 0.40~~*0.28 – 0.31*
6 or 6P	Double	Top: 11 Bottom: 9	18 – 22 28 - 32	~~0.41 - 0.46~~*0.62 – 0.68* ~~0.63 - 0.68~~*0.42 – 0.46*
7 or 7P	Double	Top: 11 Bottom: 8	18 – 22 28 - 32	~~0.41 - 0.46~~*0.62 – 0.68* ~~0.63 - 0.68~~*0.42 – 0.46*

Note 1 – AE-90S shall be used for type P seal coats.
Note 2 – HFRS-2 shall not be used with type 1 seal coat.

FINAL DRAFT MINUTES

COMMENTS AND ACTION

SECTION 404- SEAL COAT
404.04 COVER AGGREGATE

DISCUSSION: This item was introduced by Mr. Buening who explained the intentions as noted on the proposal sheet.

Mr. Pankow asked if it would still be counter-intuitive since the same amount of material is being used. Mr. Buening stated that they have data from test results that shows that it would not, and actual field applications have shown no bleeding of the emulsion has occurred when using the revised application rates.

FINAL DRAFT MINUTES

Motion: Mr. Buening Second: Mr. Keefer Ayes: 9 Nays: 0	Action: _X_ Passed as Submitted _____ Passed as Revised _____ Withdrawn
Standard Specifications Sections affected: SECTION 404.04 pg. 275. Recurring Special Provision affected: NONE Standard Sheets affected: NONE Design Manual Sections affected: NONE GIFE Sections cross-references: NONE	_X_ 2016 Standard Specifications Book _____ Revise Pay Items List _X_ Create RSP (No.404-R-612) Effective December 01, 2013 Letting RSP Sunset Date: September 01, 2015 _____ Revise RSP (No._____) Effective _____ Letting RSP Sunset Date: _____ Standard Drawing Effective _____ _____ Create RPD (No. _____) Effective _____ Letting _____ Technical Advisory GIFE Update Req'd.? Y ___ N ___ By _____ Addition or _____ Revision Frequency Manual Update Req'd? Y___N___ By _____ Addition or _____ Revision Received FHWA Approval? YES

Mr. Pankow
Date: 09/19/13

SPECIFICATION, SPECIAL PROVISIONS AND DRAWINGS
REVISION TO SPECIAL PROVISIONS

PROPOSAL TO STANDARDS COMMITTEE

PROBLEM(S) ENCOUNTERED: As GPS use by contractors has increased, INDOT has seen the advantage of including a GPS rover for the Department's use into contracts. Each district including the rover in contracts has developed a unique special provision. This proposal consolidates these unique SP's into an RSP to standardize the requirements for the rover.

PROPOSED SOLUTION: This proposal standardizes the GPS rover requirements.

APPLICABLE STANDARD SPECIFICATIONS: 105.08

APPLICABLE STANDARD DRAWINGS: N/A

APPLICABLE DESIGN MANUAL SECTION: N/A

APPLICABLE SECTION OF GIFE: Section 3.4 covers construction staking and currently includes a very brief discussion of GPS use.

APPLICABLE RECURRING SPECIAL PROVISIONS: This submittal will develop an RSP

PAY ITEMS AFFECTED: This creates a new pay item, Construction Engineering, GPS Rover paid by LS.

Submitted By: Greg Pankow

Title: State Construction Engineer

Organization: INDOT

Phone Number: 232-5502

Date: September 9, 2013

APPLICABLE SUB-COMMITTEE ENDORSEMENT: Yes

FINAL DRAFT MINUTES

REVISION TO SPECIAL PROVISIONS

PROPOSED NEW 105-C-XXX GPS FOR USE BY PROJECT PERSONNEL

105-C-XXX GPS ROVER FOR USE BY PROJECT PERSONNEL

(Adopted xx-xx-13)

Description

This work shall consist of providing a GPS rover and cellular modem for use by the Engineer for the duration of the contract.

Materials

Materials shall be in accordance with the following:

The Global Positioning System, GPS, rover shall consist of a GPS receiver antenna, data collector and a survey-grade rod with a rod mounted adaptor for the data collector. The GPS rover shall be a survey-grade unit with vertical and horizontal precision of 0.1 ft. mounted on a bi-pod.

Software to analyze the data shall be provided to the Engineer. The software shall be capable of calculating earthwork volumes, determining stations and offsets and calculating the area and volumes of an irregular shape. The data collector shall be capable of exporting collected data in its native format and also in an ASCII format for processing in other software packages. The Contractor shall provide a project surface model, if available, consisting of the design surface, roadway alignment and associated horizontal line work.

The rover, data collector and accompanying software provided to the Department shall be compatible with equipment used by the Contractor.

The GPS rover shall be capable of communicating with the INDOT Continuously Operating Reference Stations, InCORS, network. The GPS rover shall be capable of using GPS and Glonass satellites.

If the cellular modem service does not provide a sufficient signal at the project site to communicate effectively, as determined by the Engineer, the Contractor shall provide a base station in lieu of the cellular modem. The base station shall be survey grade and compatible with the rover. The Contractor shall provide sufficient control throughout the project limits for the base station setup.

The materials provided shall be for the exclusive use by the Engineer for the duration of the contract, and shall remain the property of the Contractor.

Construction Requirements

The Contractor shall provide a contact to the Engineer in the event technical difficulties are encountered. The Contractor shall provide operators manuals for the equipment furnished. The Contractor shall provide up to 16 hours of training in the use of the equipment to the Engineer. Training will be scheduled at mutually agreeable times.

The Contractor shall not be responsible for providing training on any software or equipment used by the Department that is not provided by the Contractor or any of its subcontractors.

Up to an additional eight hours of training shall be provided if a base station is provided. The Contractor shall be responsible for daily set up of the base station, at a location approved by the Engineer, until all training has been provided.

If the equipment becomes unusable for any reason, the Contractor shall repair or replace it within four business days of being notified.

FINAL DRAFT MINUTES

REVISION TO SPECIAL PROVISIONS

PROPOSED NEW 105-C-XXX GPS FOR USE BY PROJECT PERSONNEL

Method of Measurement

Construction Engineering, GPS Rover will not be measured for payment.

Basis of Payment

Construction Engineering, GPS Rover will be paid at the contract unit price per lump sum. If a base station is provided, payment will be in accordance with 109.05.

Payment will be made under:

Pay Item	**Pay Unit Symbol**
Construction Engineering, GPS Rover	LS

The cost of the equipment, use of the equipment for up to 60 days beyond final acceptance, training, technical assistance, manuals, software and all other necessary incidentals shall be included in the cost of the pay item. Payment for additional equipment to replace any damaged due to the Department’s negligence, will be paid in accordance with 104.03.

If contract time is extended by more than 30 days, a prorated additional payment will be made.

FINAL DRAFT MINUTES

COMMENTS AND ACTION

105-C-XXX GPS FOR USE BY PROJECT PERSONNEL

DISCUSSION: This item was introduced and presented by Mr. Pankow.

Mr. Berebitsky concurred with the provision as presented.

As requested by Mr. Keefer, Mr. Pankow stated that IOT has been made aware of what is needed and that the software should be compatible with our existing operating systems.

FINAL DRAFT MINUTES

Motion: Mr. Pankow Second: Mr. Buening Ayes: 9 Nays: 0	Action: _X_ Passed as Submitted _____ Passed as Revised _____ Withdrawn
Standard Specifications Sections affected: SECTION 105. Recurring Special Provision affected: NONE Standard Sheets affected: NONE Design Manual Sections affected: NONE GIFE Sections cross-references: SECTION 3.4	_____ 2016 Standard Specifications Book _____ Revise Pay Items List _X_ Create RSP (No.105-C-235) Effective December 01, 2013 Letting RSP Sunset Date: _____ _____ Revise RSP (No._____) Effective _____ Letting RSP Sunset Date: _____ Standard Drawing Effective _____ _____ Create RPD (No. _____) Effective _____ Letting _____ Technical Advisory GIFE Update Req'd.? Y ___ N ___ By _____ Addition or _____ Revision Frequency Manual Update Req'd? Y___N___ By _____ Addition or _____ Revision Received FHWA Approval? YES