INDIANA DEPARTMENT OF TRANSPORTATION
Driving Indiana's Economic Growth

100 North Senate Avenue
Room N925
Indianapolis, Indiana 46204

PHONE: (317) 232-5502
FAX: (317) 232-5551

Mitchell E. Daniels, Jr., Governor
Michael B. Cline, Commissioner

FIRST DRAFT MINUTES

September 20, 2012 Standards Committee Meeting

FIRST DRAFT MINUTES

MEMORANDUM

September 25, 2012

TO: Standards Committee

FROM: Scott Trammell, Secretary

RE: Minutes from the September 20, 2012 Standards Committee Meeting

A Standards Committee meeting was called to order by Mr. Miller at 09:01 a.m. on September 20, 2012 in the N955 Bay Window Conference Room.
The meeting was adjourned at 10:12 a.m.

The following committee members were in attendance:

Mark Miller, Chairman
Bob Cales, Contr. Admin.
Dave Boruff, Traffic Admin.
Elizabeth Phillips, Str. Services
Ron Walker, Materials Mgmt.
Greg Pankow, State Eng.
Richard Vancleave, Rdway Srv.
Mike Buening, Pavement Eng.

Also in attendance were the following:

Bren George, FHWA
Scott Trammell, Secretary
Wendy Chiles, INDOT
Jim Reilman, INDOT
Yuhui Hu, INDOT
Mike McCool, Beam, Longest & Neff LLC
Lalit Garg, INDOT
Paul Berebitsky, ICA
Joe Bruno, INDOT
Jeff James, INDOT
Athar Khan, INDOT

The following items were listed for consideration:

A. GENERAL BUSINESS ITEMS

OLD BUSINESS

Note: Approval of the meeting minutes from the June 21, 2012 Standards Committee meeting was accomplished electronically.

B. CONCEPTUAL PROPOSAL ITEMS

OLD BUSINESS

(No items were listed)

NEW BUSINESS

1. Establishment of the Modular Block Wall Committee (Ms. Yuhui Hu, see on page 5)

DISCUSSION: Ms. Hu and Mr. Khan presented this item and Mr. Khan explained the intention as described in the conceptual proposal page. Mr. Miller stated that we already have a Wall Committee and recommendations from Geotech are welcome.

Mr. Reilman further explained the need for larger modular blocks for larger applications than are currently in our spec book. The intention is also to keep this from becoming proprietary. The retaining wall committee is trying to determine which products should be acceptable for use.

Mr. Miller expressed the need to keep from having Unique Special Provisions for proprietary products, so there certainly is a need for this committee. Ms. Hu stated that the modular block is a more viable option for temporary applications. Mr. Reilman clarified that this will compete more with larger MSE type walls.

Further discussion ensued concerning proper applications and implementations of these types of walls, and that we do the best we can to screen the Unique Special Provisions (USP's) that arise. Ms. Phillips expressed concern over having proper procedures in place. Mr. Reilman explained that revisions to the ITM will go through the Office of Materials Management (OMM). Mr. Walker stated that the USP's should be controlled by Geotech and OMM.

Mr. Walker suggested this group become a part of the Wall Committee and that Geotech compile a Unique Special Provision for Modular Block Walls. Mr. Walker inquired if there are more than one manufacturer for this size modular block. Mr. Khan and Mr. Reilman confirmed that there are.

As Mr. Reilman stated, further issues such as design and construction criteria are yet to be discussed and determined by the wall committee, with input from our Geotech department. Mr. Miller stated that the Geotech office will take the lead on this item.

2. Explication of the Payment for Benching (Mr. Pankow, see on page 6)

DISCUSSION: Mr. Pankow presented this item as stated on the proposal page, offering an explanation and discussion of how benching is measured and paid for and how it applies to the language found in 203 of the Standard Specifications.

Input from the committee and industry was sought since benching isn't straight-forward. One option offered is that benching be considered to be an incidental activity. Mr. James stated the desire of this discussion is to get the committee's input to clarify on when and where, and if, this should be paid for, so that all of 203 makes sense and eliminate any potential confusion.

FIRST DRAFT MINUTES

Mr. Berebitsky stated that industry input is equally split on how to handle it. Mr. Pankow stated that they may make it incidental in all cases.

3. INDOT CAD Standards Manual (Ms. Phillips, see on page 7)

DISCUSSION: Ms. Phillips presented this item as presented on the proposal sheet, in an effort to standardize the CAD procedures. Mr. Miller asked if our IT people had been involved. Ms. Phillips confirmed that yes, they have been involved.

Ms. Chiles said that the next draft will be out soon and that they are waiting for comments and input from the committee and from FHWA. Mr. Boruff inquired as to the naming portion in regards to pavement markings and ITS drawings. Would it be by sheet or by type of project? Ms. Chiles directed attention to the next page of the CAD manual which describes the types of sheets proposed, and that there is a style sheet for pavement markings.

Ms. Phillips stated that these standards are not brand new and that this is to formalize what has been in place previously. Ms. Chiles stated that the next step is to establish examples of the sheets described in the tables.

4. Revise Design Manual Figure 404-4B (Ms. Phillips, see on page 8)

DISCUSSION: Ms. Phillips presented this item, and stated that some of the figures were found to be incorrect, and the intention is to provide accurate clarifications. The revisions are more typographic in nature. Ms. Phillips stated that the main concern is for crash-worthiness. Inquiry from Mike McCool, from BLN, as to the 8 in sphere requirements. Ms. Phillips said she'll look into it.

5. Revise Design Manual Figure 404-4D (Ms. Phillips, see on page 15)

DISCUSSION: Ms. Phillips presented this item and stated that the drawing did not accurately reflect what is shown on the standard drawings.

C. STANDARD SPECIFICATIONS, SPECIAL PROVISIONS AND STANDARD DRAWINGS PROPOSED ITEMS

OLD BUSINESS

(No items were listed)

NEW BUSINESS

Item No. 01 09/20/12 (2012 SS)	Mr. Boruff	pg 19
Standard Drawings:		
802-SNGP-01	SIGN PLACEMENT	
802-SNGP-03	SIGN PANEL DETAILS	
805-SGSP-04	BASE PLATE FOR SIGNAL STEEL STRAIN POLE	

ACTION: PASSED AS REVISED

FIRST DRAFT MINUTES

Standard Drawings:

706-TTFC-01	CONCRETE BRIDGE RAILING PLAN AND ELEVATION
706-TTFC-02	CONCRETE BRIDGE RAILING SECTIONS
706-TTFC-03	CONCRETE BRIDGE RAILING REINFORCING BAR BENDING DETAILS

ACTION: PASSED AS SUBMITTED

cc: Committee Members (11)
FHWA (2)
ICA (1)

FIRST DRAFT MINUTES

Ms. Yuhui Hu
Date: 09/20/12

CONCEPTUAL PROPOSAL 1

ESTABLISHMENT OF THE MODULAR BLOCK WALL COMMITTEE

CONCEPTUAL 1

PROPOSAL TO STANDARDS COMMITTEE

PROBLEM(S) ENCOUNTERED: Large Modular Block Wall is a relatively new wall system which has been used in U.S. with significant heights for bridges and structures. Currently, modular block walls can only be used for non-structures no more than 5 feet high. State of Indiana has not a criterion to evaluate those type of walls. If we could develop the criterion and approve some of the wall systems, more product providers would be considered for contractors and designers. The consequent competition will benefit INDOT to have a larger pool of products to choose quality products at a lower price.

PROPOSED SOLUTION: Establish modular block wall committee to review modular block wall systems and create a specification and guidance for designers on when to use.

APPLICABLE STANDARD SPECIFICATIONS: 732

APPLICABLE STANDARD DRAWINGS: NONE

APPLICABLE DESIGN MANUAL SECTION: TBD; most likely 410-5.02

APPLICABLE SECTION OF GIFE: TBD

APPLICABLE RECURRING SPECIAL PROVISIONS: TBD

PAY ITEMS AFFECTED: TBD

Submitted By: Yuhui Hu

Title: Geotechnical Engineer

Organization: Office of Geotechnical Services

Phone Number: 610-7251 Ext. 220

Date: 6/26/2012

APPLICABLE SUB-COMMITTEE ENDORSEMENT: n/a

FIRST DRAFT MINUTES

CONCEPTUAL PROPOSAL 2

EXPLICATION OF THE PAYMENT FOR BENCHING

CONCEPTUAL 2

PROPOSAL TO STANDARDS COMMITTEE

PROBLEM(S) ENCOUNTERED: Payment for benching is inconsistent within Section 203. Benching is measured and paid for in 203.21 based on the class of excavation encountered. Benching is not paid for in 203.22.

PROPOSED SOLUTION: All benching should be considered incidental to the work and should not be paid for directly.

APPLICABLE STANDARD SPECIFICATIONS: 203.21 and 203.22

APPLICABLE STANDARD DRAWINGS: N/A

APPLICABLE DESIGN MANUAL SECTION: 17-2.05

APPLICABLE SECTION OF GIFE: 3.10

APPLICABLE RECURRING SPECIAL PROVISIONS: N/A

PAY ITEMS AFFECTED: Common Excavation

Submitted By: Jeff James

Title: Construction Field Engineer

Organization: INDOT

Phone Number: 317/232-5082

Date: 8/2/12

APPLICABLE SUB-COMMITTEE ENDORSEMENT: N/A

FIRST DRAFT MINUTES

CONCEPTUAL 3

PROPOSAL TO STANDARDS COMMITTEE

PROBLEM(S) ENCOUNTERED: CAD/Drafting standards are not currently included in the Indiana Design Manual. Current Ch. 14 refers designers to a Ch. 15 Drafting Guidelines, "to be submitted in the future" and a non-existent INDOT CADD System User Guide for guidance regarding CAD/Drafting standards for INDOT production plans. In the absence of such documentation, the appearance of INDOT plans produced both in-house and by consultants has not been consistent.

PROPOSED SOLUTION: Adopt the INDOT CAD Standards manual (see attached). This manual will be provided as a supplement to the Design Manual, and contains information for both the missing Ch. 15 as well as the CAD system tools available to drafters/designers to facilitate their compliance with documented INDOT drafting standards. This manual will be directly referenced and linked in the forthcoming IDM Rewrite Ch. 103.

APPLICABLE STANDARD SPECIFICATIONS: none

APPLICABLE STANDARD DRAWINGS: none

APPLICABLE DESIGN MANUAL SECTION: Rewrite Ch. 103, Current Ch. 15

APPLICABLE SECTION OF GIFE: none

APPLICABLE RECURRING SPECIAL PROVISIONS: none

PAY ITEMS AFFECTED: none

Submitted By: Elizabeth Phillips

Title: Manager, Office of Bridge Standards and Policy

Organization: INDOT

Phone Number: 317-232-6775

Date: August 27, 2012

APPLICABLE SUB-COMMITTEE ENDORSEMENT: Anne Rearick, John Wright, CAD Peer Group

FIRST DRAFT MINUTES

Ms. Phillips
Date: 09/20/12

CONCEPTUAL PROPOSAL 4

REVISE DESIGN MANUAL FIGURE 404-4B

CONCEPTUAL 4

PROPOSAL TO STANDARDS COMMITTEE

PROBLEM(S) ENCOUNTERED: The bridge railing types, TL-2 table in Design Manual 404-4B incorrectly indicates that railing types PF-1, PF-2 and TX are pedestrian height railings.

PROPOSED SOLUTION: Revise the Design Manual Figure 404-4B to show railing types PF-1, PF-2 and TX as Common height railings. Also correct additional information as shown on attached markups and final draft of proposed revised figure.

APPLICABLE STANDARD SPECIFICATIONS: none

APPLICABLE STANDARD DRAWINGS: none

APPLICABLE DESIGN MANUAL SECTION: Figure 404-4B

APPLICABLE SECTION OF GIFE: none

APPLICABLE RECURRING SPECIAL PROVISIONS: none

PAY ITEMS AFFECTED: none

Submitted By: Elizabeth Phillips

Title: Manager, Office of Bridge Standards and Policy

Organization: INDOT

Phone Number: 317-232-6775

Date: August 27, 2012

APPLICABLE SUB-COMMITTEE ENDORSEMENT: none

FIRST DRAFT MINUTES

Railing Designation	TS-1 *	PF-2	PS-2	TX **
Height Designation	Common	Common ~~Pedestrian~~	Pedestrian	Common ~~Pedestrian~~
Mounting Location	On bridge coping	Flush with bridge deck	Atop sidewalk of minimum 5 ft width	~~Either atop sdwk. of 5 ft min. width, or~~ flush with bridge deck
Railing Elements	Thrie-beam with steel posts	2 steel tubes with steel posts on concrete parapet	~~2~~ 4 steel tubes with steel posts on concrete parapet	Concrete
Total Height	2'-9"	3'-6"	3'-6"	3'-6"
Bridge-Railing Standard Drawings	n/a	706-BRPP-02, and -05, -06	706-BRPP-04, and -05, -06	706-BRTX-01 through -04
Bridge-Railing Transition	none	TPF-2	TPS-2	TTX
Br.-Rlg.-Trans. Standard Drawings	n/a	706-TTPP-03, and -04	706-TTPP-07 and -08	706-TTTX-01 and -02
Guardrail Transition	TGS-1	TGB	TGB	TGB
Gdrl.-Trans. Standard Drawings	n/a	601-TTGB-01 through -05	601-TTGB-01 through -05	601-TTGB-01 through -05

* Bridge railing type TS-1 may be used only on a local-public-agency collector or local road. Details for the bridge railing and transition are shown in INDOT Recurring Plan Detail 706-B-140d.

** Bridge railing type TX should be considered for an aesthetically-sensitive area.

BRIDGE-RAILING TYPES
TEST LEVEL 2

Figure 404-4B
(Page 1 of 3)

REVISE DESIGN MANUAL FIGURE 404-4B (WITH MARKUPS)

Railing Designation	FC	TR ***	PS-1	PF-1
Height Designation	Common	Common	Pedestrian	Common ~~Pedestrian~~
Mounting Location	Flush with bridge deck	On existing concrete parapet	Atop sidewalk of minimum 5 ft width	Flush with bridge deck
Railing Elements	Concrete, shape F	Thrie beam with steel posts	1 steel tube with steel posts on concrete parapet	1 steel tube with steel posts on concrete parapet
Total Height	2'-9"	2'-10"	3'-6"	3'-6"
Bridge-Railing Standard Drawings	706-BRSF-01, and -03	706-BRTR-01, through -04	706-BRPP-03, and -05, -06	706-BRPP-01, and -05, -06
Bridge-Railing Transition	TFC	none	TPS-1	TPF-1
Br.-Rlg.-Trans. Standard Drawings	706-TTFC-01 through -03	n/a	706-TTPP-05 and -06	706-TTPP-01 and -02
Guardrail Transition	TGB	TGR	TGB	TGB
Gdrl.-Trans. Standard Drawings	601-TTGB-01 through -05	706-BRTR-05 and -06	601-TTGB-01 through -05	601-TTGB-01 through -05

*** Bridge-railing type TR should be used only to replace existing aluminum bridge railing where no other modifications to a bridge are to be made, either as a spot improvement or within the limits of a 3R or 4R project.

BRIDGE-RAILING TYPES
TEST LEVEL 4

Figure 404-4B
(Page 2 of 3)

(NO CHANGES, THIS PAGE)

Railing Designation	FT	TF-2
Height Designation	Truck	Truck
Mounting Location	Flush with bridge deck	Flush with bridge deck
Railing Element	Concrete, shape F	2 steel tubes with steel posts on concrete parapet
Total Height	3'-9"	4'-2"
Bridge-Railing Standard Drawings	706-BRSF-02, and -03	706-BRTF-01 through -04
Bridge-Railing Transition	TFT	TTF-2
Br.-Rlg.-Trans. Standard Drawings	706-TTFT-01 through -03	706-TTTF-01 through -04
Guardrail Transition	TGB	TGB
Gdrl.-Trans. Standard Drawings	601-TTGB-01 through -05	601-TTGB-01 through -05

BRIDGE-RAILING TYPES
TEST LEVEL 5

Figure 404-4B
(Page 3 of 3)

CONCEPTUAL PROPOSAL 4 (CONTINUED)

REVISE DESIGN MANUAL FIGURE 404-4B (DRAFT)

Railing Designation	TS-1 *	PF-2	PS-2	TX **
Height Designation	Common	Common	Pedestrian	Common
Mounting Location	On bridge coping	Flush with bridge deck	Atop sidewalk of minimum 5 ft width	Flush with bridge deck
Railing Elements	Thrie-beam with steel posts	2 steel tubes with steel posts on concrete parapet	4 steel tubes with steel posts on concrete parapet	Concrete
Total Height	2'-9"	3'-6"	3'-6"	3'-6"
Bridge-Railing Standard Drawings	n/a	706-BRPP-02, and -05, -06	706-BRPP-04, and -05, -06	706-BRTX-01 through -04
Bridge-Railing Transition	none	TPF-2	TPS-2	TTX
Br.-Rlg.-Trans. Standard Drawings	n/a	706-TTPP-03, and -04	706-TTPP-07 and -08	706-TTTX-01 and -02
Guardrail Transition	TGS-1	TGB	TGB	TGB
Gdrl.-Trans. Standard Drawings	n/a	601-TTGB-01 through -05	601-TTGB-01 through -05	601-TTGB-01 through -05

* Bridge railing type TS-1 may be used only on a local-public-agency collector or local road. Details for the bridge railing and transition are shown in INDOT Recurring Plan Detail 706-B-140d.

** Bridge railing type TX should be considered for an aesthetically-sensitive area.

BRIDGE-RAILING TYPES
TEST LEVEL 2

Figure 404-4B
(Page 1 of 3)

PROPOSED

Railing Designation	FC	TR ***	PS-1	PF-1
Height Designation	Common	Common	Pedestrian	Common
Mounting Location	Flush with bridge deck	On existing concrete parapet	Atop sidewalk of minimum 5 ft width	Flush with bridge deck
Railing Elements	Concrete, shape F	Thrie beam with steel posts	2 steel tubes with steel posts on concrete parapet	1 steel tube with steel posts on concrete parapet
Total Height	2'-9"	2'-10"	3'-6"	3'-6"
Bridge-Railing Standard Drawings	706-BRSF-01, and -03	706-BRTR-01, through -04	706-BRPP-03, and -05, -06	706-BRPP-01, and -05, -06
Bridge-Railing Transition	TFC	none	TPS-1	TPF-1
Br.-Rlg.-Trans. Standard Drawings	706-TTFC-01 through -03	n/a	706-TTPP-05 and -06	706-TTPP-01 and -02
Guardrail Transition	TGB	TGR	TGB	TGB
Gdrl.-Trans. Standard Drawings	601-TTGB-01 through -05	706-BRTR-05 and -06	601-TTGB-01 through -05	601-TTGB-01 through -05

*** Bridge-railing type TR should be used only to replace existing aluminum bridge railing where no other modifications to a bridge are to be made, either as a spot improvement or within the limits of a 3R or 4R project.

BRIDGE-RAILING TYPES
TEST LEVEL 4

Figure 404-4B
(Page 2 of 3)

PROPOSED

REVISE DESIGN MANUAL FIGURE 404-4B (DRAFT)

Railing Designation	FT	TF-2
Height Designation	Truck	Truck
Mounting Location	Flush with bridge deck	Flush with bridge deck
Railing Element	Concrete, shape F	2 steel tubes with steel posts on concrete parapet
Total Height	3'-9"	4'-2"
Bridge-Railing Standard Drawings	706-BRSF-02, and -03	706-BRTF-01 through -04
Bridge-Railing Transition	TFT	TTF-2
Br.-Rlg.-Trans. Standard Drawings	706-TTFT-01 through -03	706-TTTF-01 through -04
Guardrail Transition	TGB	TGB
Gdrl.-Trans. Standard Drawings	601-TTGB-01 through -05	601-TTGB-01 through -05

BRIDGE-RAILING TYPES
TEST LEVEL 5

Figure 404-4B
(Page 3 of 3)

PROPOSED

CONCEPTUAL PROPOSAL 5

REVISE DESIGN MANUAL FIGURE 404-4D

CONCEPTUAL 5

PROPOSAL TO STANDARDS COMMITTEE

PROBLEM(S) ENCOUNTERED: With the publication of corrected Standard Drawings 706-BRPP-03 and -04, the bridge railing construction shown in Design Manual Figure 404-4D is no longer consistent with the Standard Drawings for pedestrian bridge rail in combination with a concrete sidewalk. The concrete bridge rail should not be shown sitting atop the sidewalk.

PROPOSED SOLUTION: Revise the Design Manual Figure 404-4D for consistency with the pedestrian bridge rail Standard Drawings 706-BRPP-03 and -04. See attached markup and final draft of proposed revised figure.

APPLICABLE STANDARD SPECIFICATIONS: none

APPLICABLE STANDARD DRAWINGS: none

APPLICABLE DESIGN MANUAL SECTION: Figure 404-4D

APPLICABLE SECTION OF GIFE: none

APPLICABLE RECURRING SPECIAL PROVISIONS: none

PAY ITEMS AFFECTED: none

Submitted By: Elizabeth Phillips

Title: Manager, Office of Bridge Standards and Policy

Organization: INDOT

Phone Number: 317-232-6775

Date: August 27, 2012

APPLICABLE SUB-COMMITTEE ENDORSEMENT: none

FIRST DRAFT MINUTES

CONCEPTUAL PROPOSAL 5 (CONTINUED)

REVISE DESIGN MANUAL FIGURE 404-4D (WITH MARKUPS)

2012

Back

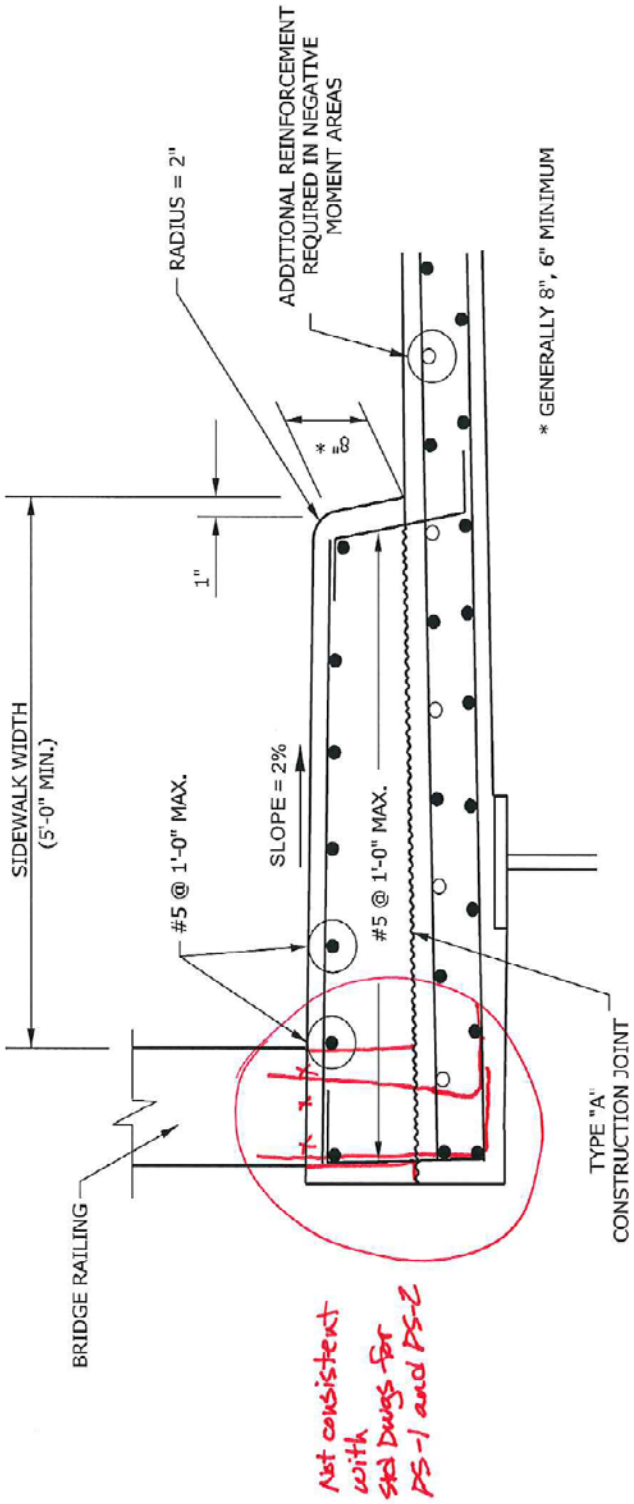

TYPICAL REINFORCEMENT IN BRIDGE SIDEWALK

Figure 404-4D

CONCEPTUAL PROPOSAL 5 (CONTINUED)

REVISE DESIGN MANUAL FIGURE 404-4D (DRAFT)

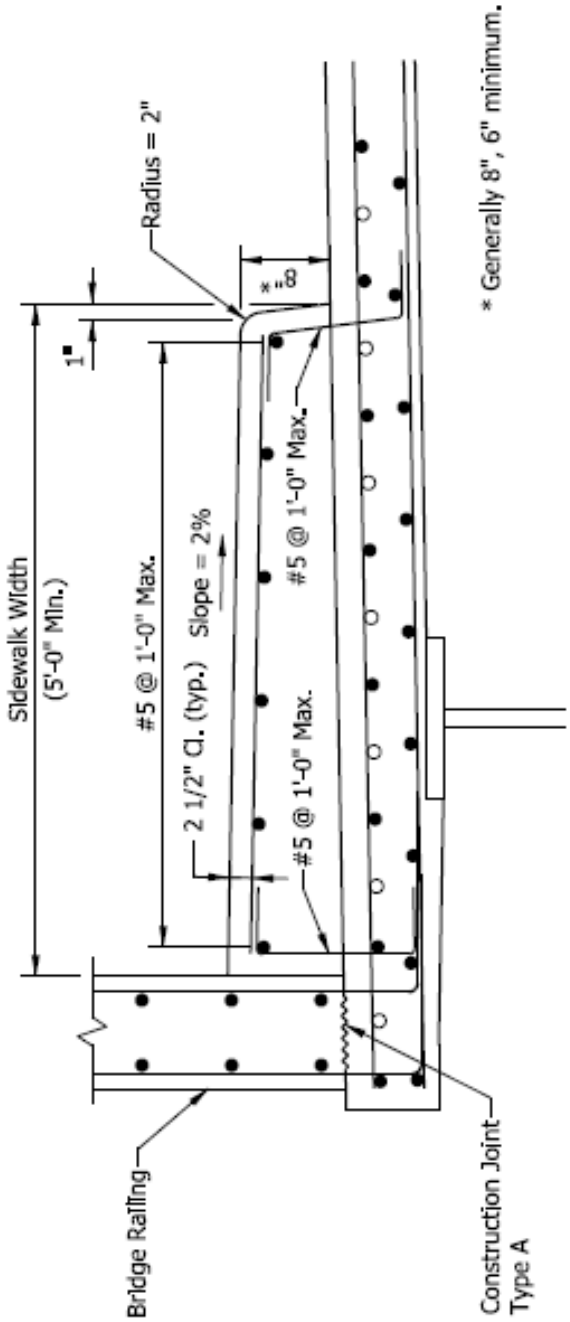

TYPICAL REINFORCEMENT IN BRIDGE SIDEWALK

Figure 404-4D

SPECIFICATION, SPECIAL PROVISIONS AND DRAWINGS
REVISION TO STANDARD DRAWINGS

PROPOSAL TO STANDARDS COMMITTEE

PROBLEM(S) ENCOUNTERED:

1. On panel sign assemblies the distance between the bottom of the panel sign and the top of the fuse plate often varies from one post to the other in the same assembly. This may lead to the breakaway mechanism not functioning correctly.

2. Clips that attach the sign panel to the support I-beams are not being installed on both sides of the I-beam for signs wider than 24' as they should be. This makes it more likely that the sign will separate from the supports.

3. Standard Drawing 805-SGSP-04 for signal strain poles contains incorrect dimensions for the base plate thickness and anchor bolt hole diameter.

PROPOSED SOLUTION:

1. Add a note to Standard drawing 802-SNGP-01 that "The distance from top of the fuse plate to the bottom of the sign shall be the same for all posts"

2. Revise Standard drawing 802-SNGP-03 to indicate that clips on both the left side and right side of the posts are required for signs wider than 24'.

3. Revise Standard drawing 805-SGSP-04 by correcting the anchor bolt hole diameter to 2 1/2" (currently shown as 2") and the base plate thickness to 2 1/2" (also currently shown as 2").

APPLICABLE STANDARD SPECIFICATIONS: 802.08(b); 922.10(a) (see RSP 922-T-168) – no changes need it.

APPLICABLE STANDARD DRAWINGS: 802-SNGP-01, 802-SNGP-03, 805-SGSP-04

APPLICABLE DESIGN MANUAL SECTION:

APPLICABLE SECTION OF GIFE:

APPLICABLE RECURRING SPECIAL PROVISIONS:

SUBMITTED BY: Dave Boruff
Title: Manager, Traffic Administration Section

Organization: INDOT
Phone Number: 317-234-7975
Date: 8/13/12
APPLICABLE SUB-COMMITTEE ENDORSEMENT? ad hoc review by District Traffic, District Maintenance, Praksh Patel, and Ken Oyler (industry).

FIRST DRAFT MINUTES

REVISION TO STANDARD DRAWINGS

EXISTING STANDARD DRAWING 802-SNGP-01 SIGN PLACEMENT (WITH MARKUPS)

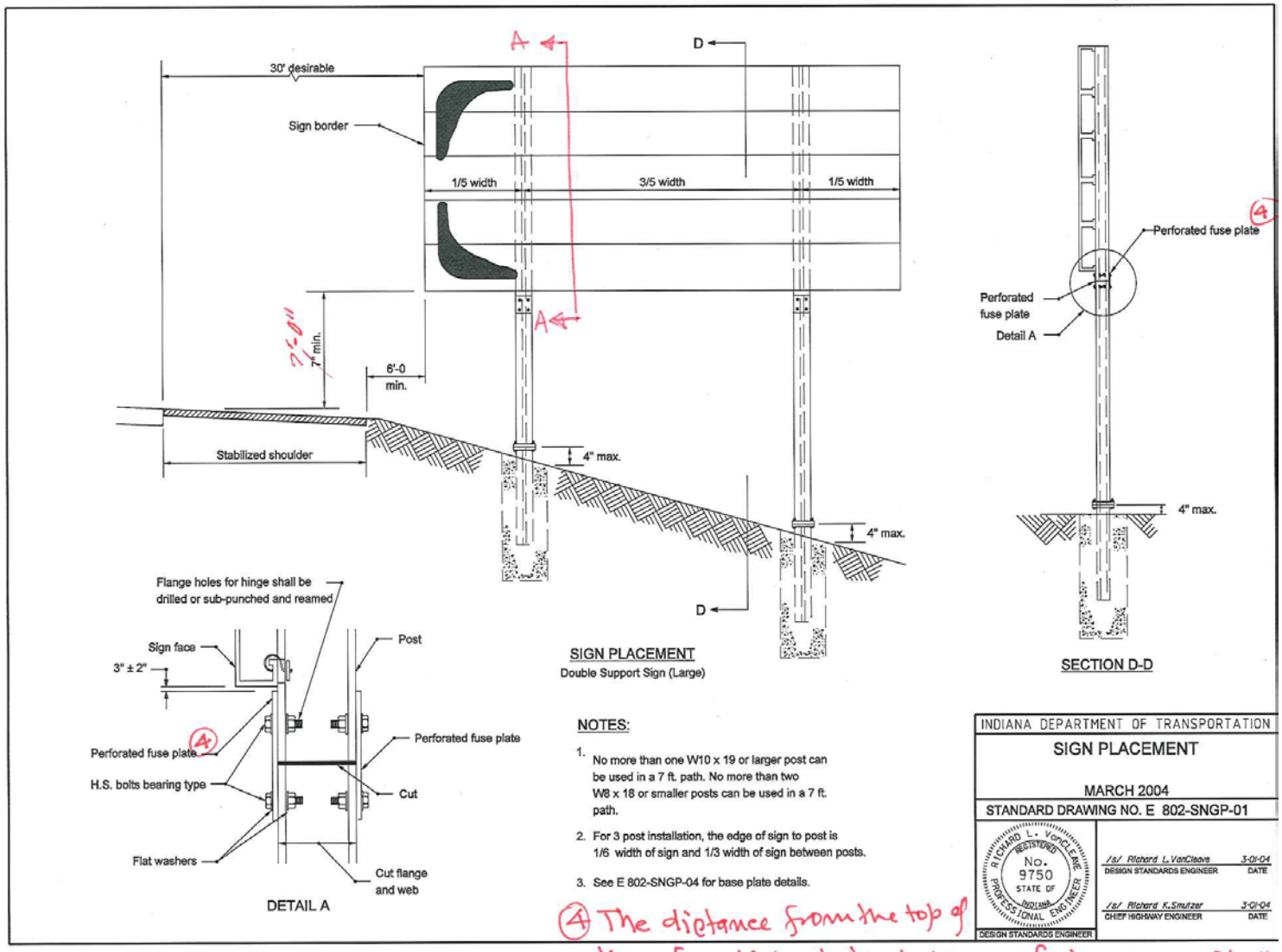

(4) The distance from the top of the fuse plate to the bottom of the sign shall the same for all posts.

REVISION TO STANDARD DRAWINGS

REVISED STANDARD DRAWING 802-SNGP-01 SIGN PLACEMENT (DRAFT)

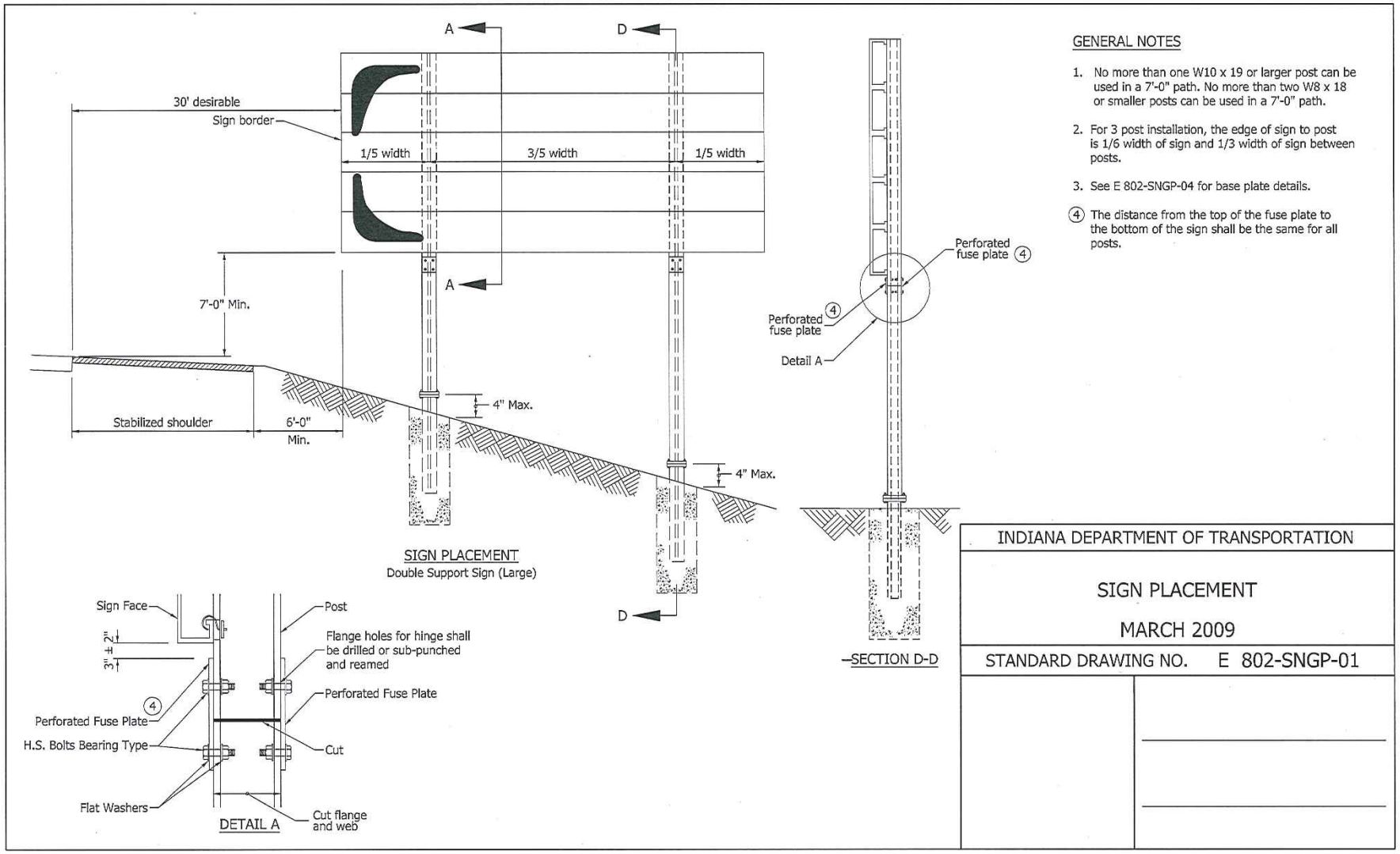

REVISION TO STANDARD DRAWINGS

EXISTING STANDARD DRAWING 802-SNGP-03 SIGN PANEL DETAILS (WITH MARKUPS)

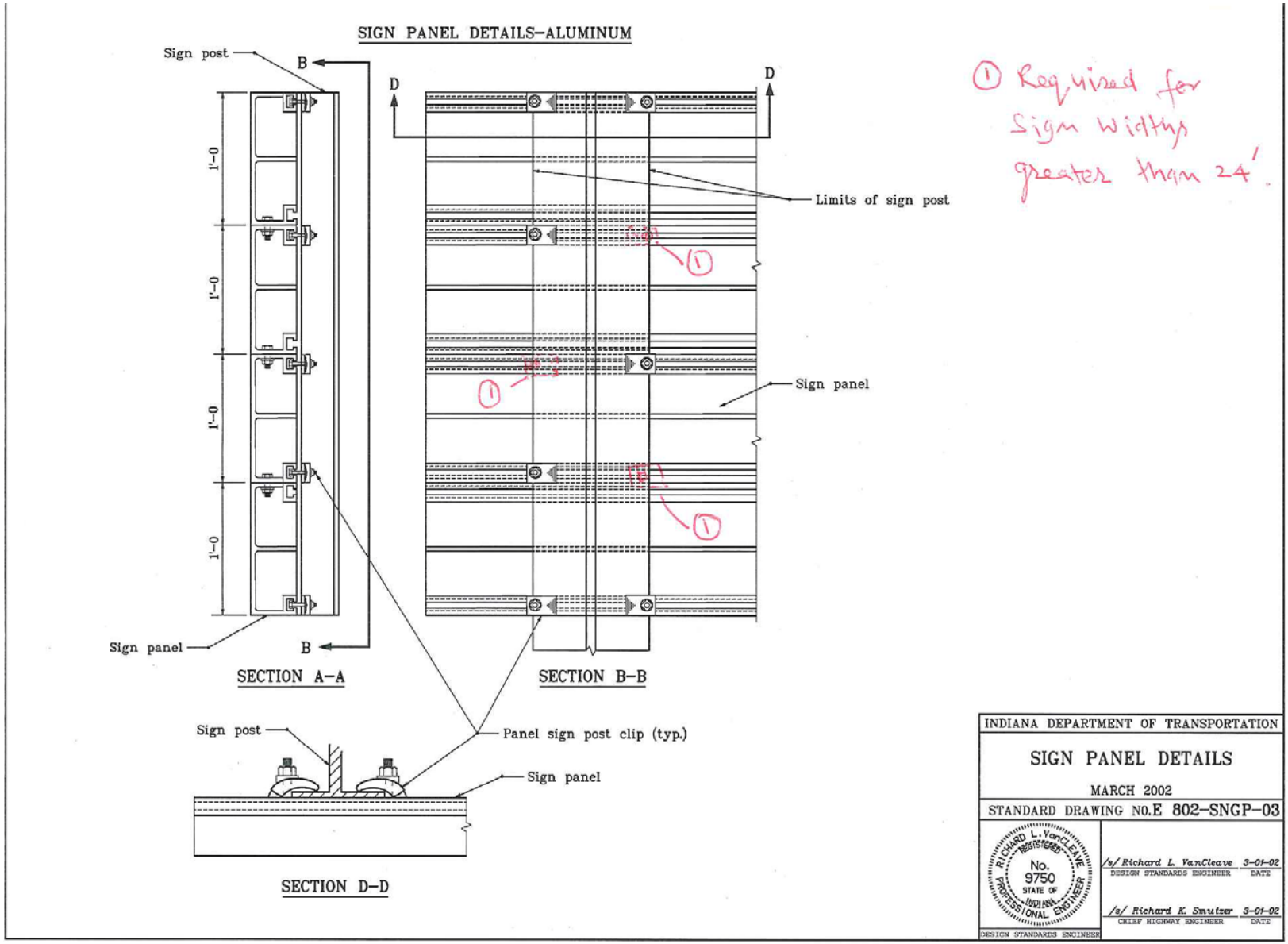

REVISION TO STANDARD DRAWINGS

REVISED STANDARD DRAWING 802-SNGP-03 SIGN PANEL DETAILS (DRAFT)

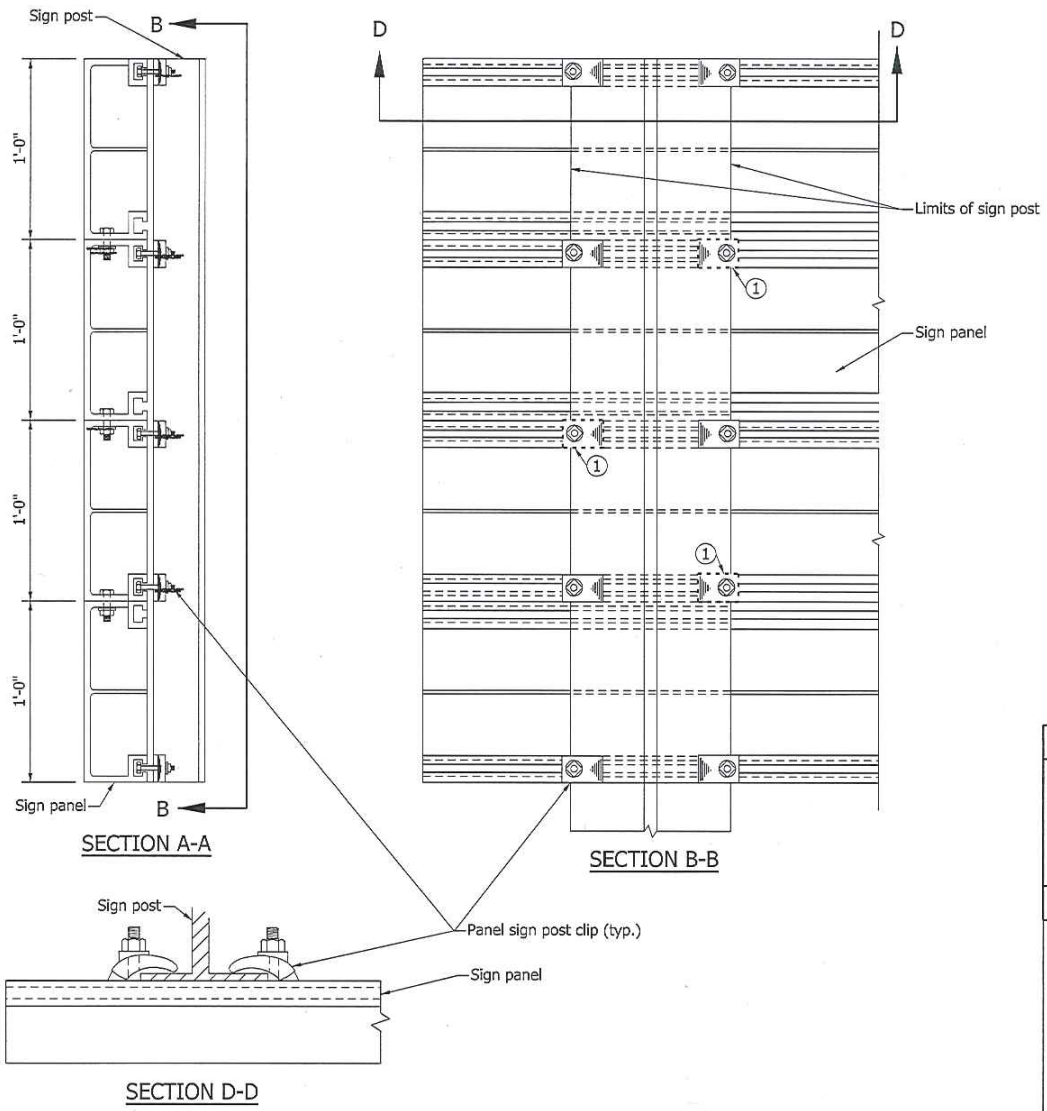

NOTES:

1. Required for sign width greater than 24 feet.

INDIANA DEPARTMENT OF TRANSPORTATION	
SIGN PANEL DETAILS	
STANDARD DRAWING NO. E 802-SNGP-03	

REVISION TO STANDARD DRAWINGS

EXISTING STANDARD DRAWING 805-SGSP-01 BASE PLATE FOR SIGNAL STEEL STRAIN POLE (WITH MARKUPS)

EXISTING

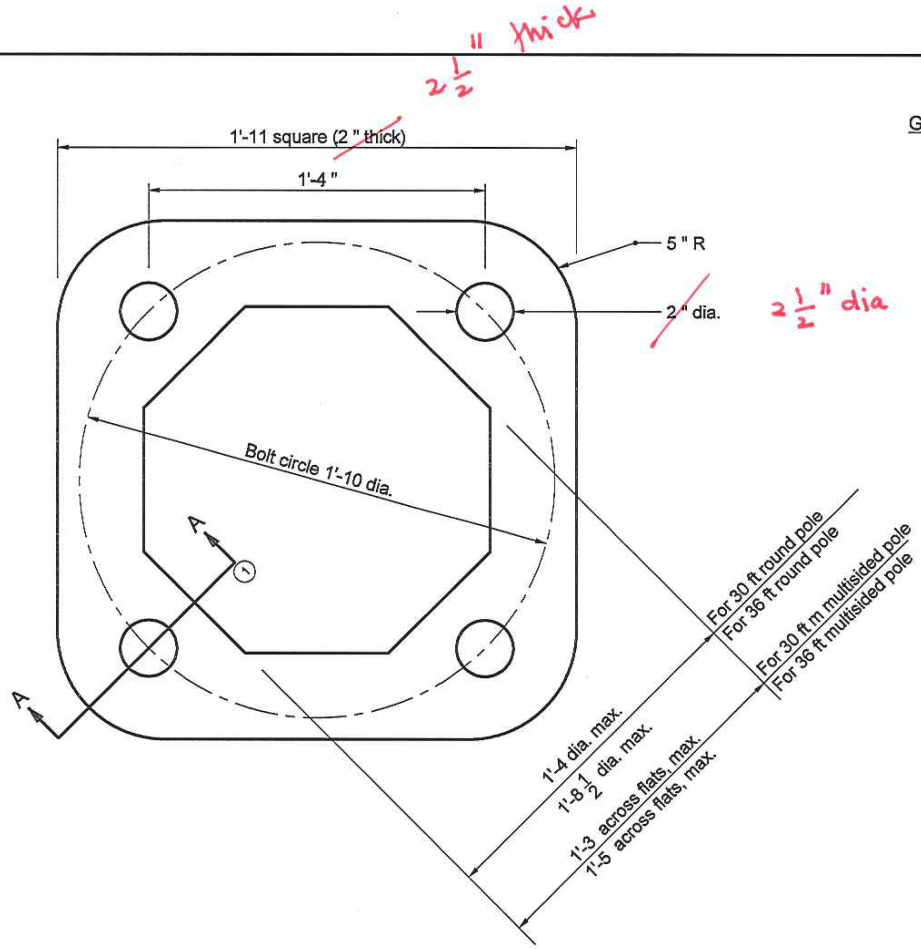

GENERAL NOTES

1 See Standard Drawing E 805-SGSP-05 for Section A-A.

INDIANA DEPARTMENT OF TRANSPORTATION

BASE PLATE FOR
SIGNAL STEEL STRAIN POLE

SEPTEMBER 2004

STANDARD DRAWING NO. E 805-SGSP-04

RICHARD L. VanCLEAVE REGISTERED No. 9750 STATE OF INDIANA PROFESSIONAL ENGINEER

DESIGN STANDARDS ENGINEER

/s/ Richard L. VanCleave 9-01-04
DESIGN STANDARDS ENGINEER DATE

/s/ Richard K. Smutzer 9-01-04
CHIEF HIGHWAY ENGINEER DATE

REVISION TO STANDARD DRAWINGS

REVISED STANDARD DRAWING 805-SGSP-04 BASE PLATE FOR SIGNAL STEEL STRAIN POLE (DRAFT)

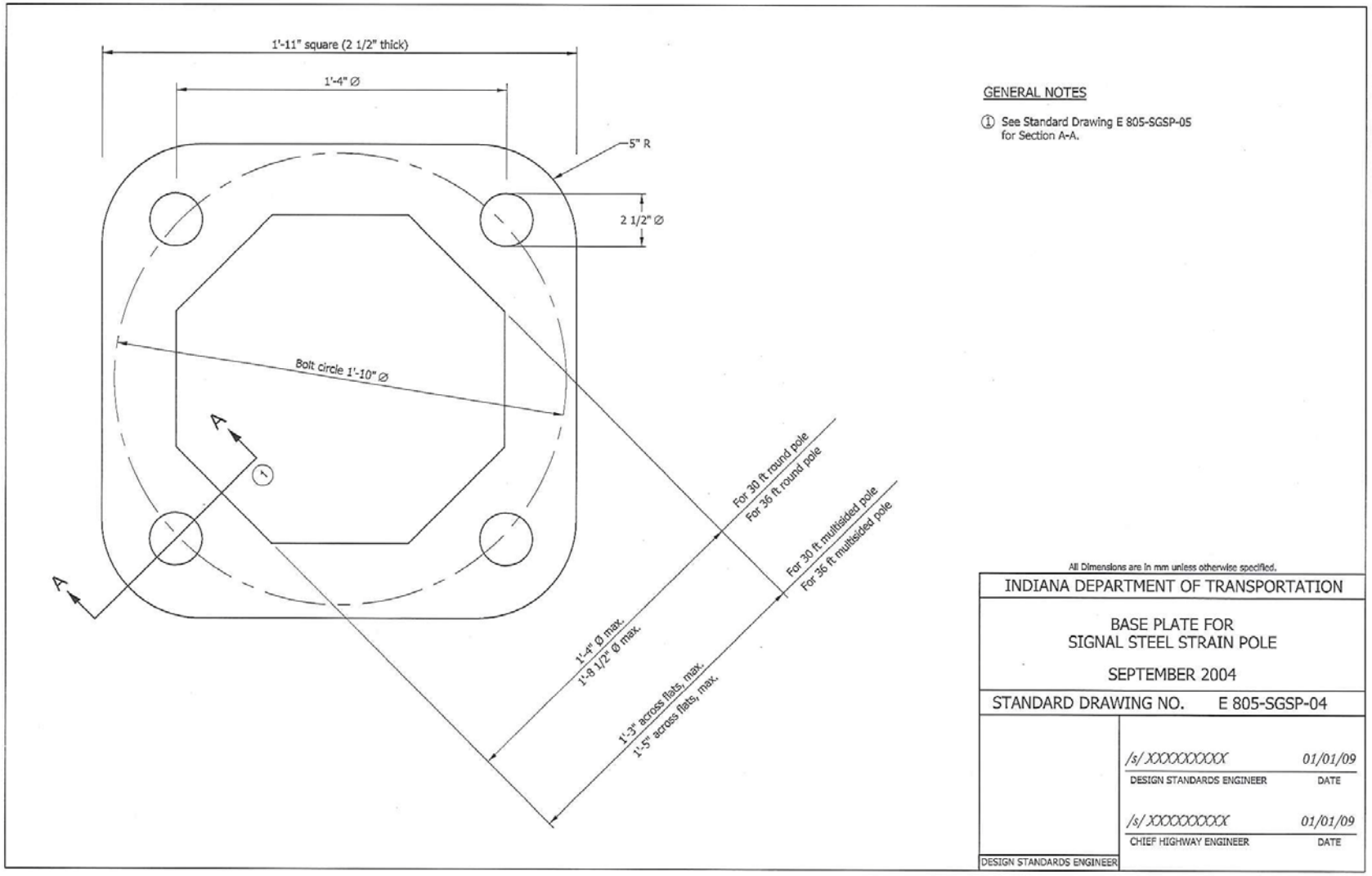

REVISIONS TO STANDARD DRAWINGS

BACKUP 01: EXISTING STANDARD DRAWING 805-SGSP-05 ANCHOR BOLT DETAIL FOR SIGNAL STEEL STRAIN POLES

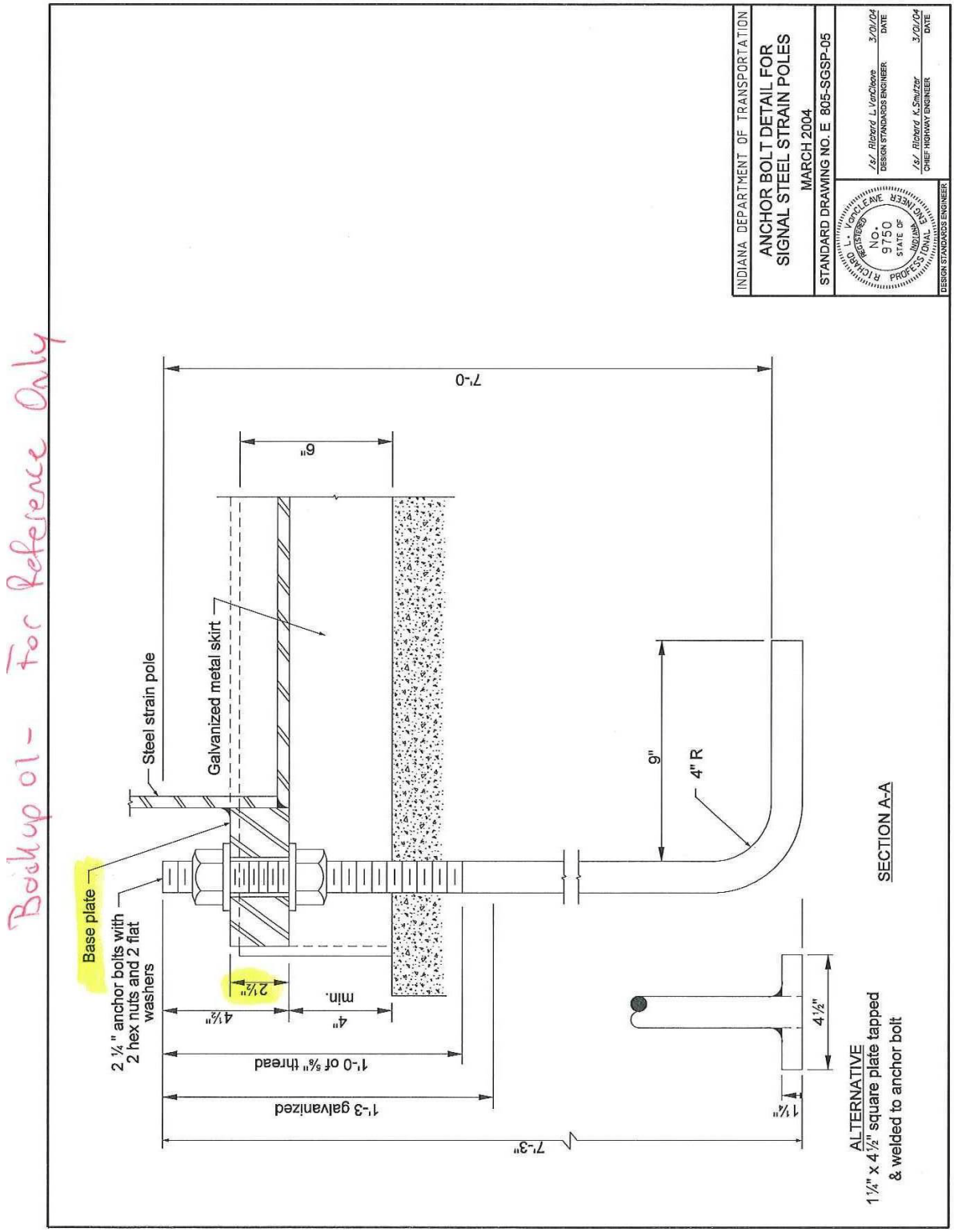

REVISION TO STANDARD DRAWINGS

802-SNGP-01 SIGN PLACEMENT
802-SNGP-03 SIGN PANEL DETAILS
805-SGSP-04 BASE PLATE FOR SIGNAL STEEL STRAIN POLE

DISCUSSION: Mr. Boruff presented this item as described on the proposal sheet. Mr. Garg stated that at the time of a hit, it would not behave the way it should, so the note was added for clarification.

Ms. Phillips suggested adding a note calling out the stub length, and asked if it includes the 4 inch projection? Ms. Chiles clarified that they'd like it to be shown graphically on the drawings.

Ms. Phillips also asked if Mr. Hanza will still be the one to sign these drawings. Mr. Miller and Mr. Vancleave verified the responsible individuals for signing of the drawings.

Mr. Boruff continued his explanation of the drawing revisions in regards to clips. Mr. Pankow inquired about the size of the signs and how this applies. Mr. Miller expressed concerns about signs that have blown down following heavy storms. Mr. Garg said that is due to the design of the fuse plate, and they are looking into revising that plate, due to the fatigue on that fuse plate.

Mr. Boruff continued explaining the rest of the revisions presented. Ms. Phillips asked about the bolt circle and Mr. Boruff stated that it is correct and that it is centered.

Mr. Boruff then made the motion to approve as revised. Mr. Cales seconded that motion. Mr. Cales stated that Mr. Boruff needs to come up with the Basis of Use in about 3 weeks.

FIRST DRAFT MINUTES

REVISION TO STANDARD DRAWINGS

802-SNGP-01 SIGN PLACEMENT
802-SNGP-03 SIGN PANEL DETAILS
805-SGSP-04 BASE PLATE FOR SIGNAL STEEL STRAIN POLE

(continued)

FIRST DRAFT MINUTES

Motion: Mr. Boruff Second: Mr. Cales Ayes: 7 Nays: 0	Action: ____ Passed as Submitted __X__ Passed as Revised ____ Withdrawn
Standard Specifications Sections affected: 802.08(b) pg 723; 922.05(a) pg 1009. Recurring Special Provision affected: NONE Standard Sheets affected: 802-SNGP-01; -03; 805-SGSP-04 Design Manual Sections affected: NONE GIFE Sections cross-references: NONE	____ 2014 Standard Specifications Book ____ Revise Pay Items List ____ Create RSP (No.____) Effective ____ Letting RSP Sunset Date: ____ ____ Revise RSP (No.____) Effective ____ Letting RSP Sunset Date: ____ Standard Drawing Effective Sept. 01, 2013 __X__ Create RPD (No.802-T-182d and 805-T-183d) Effective Jan. 01, 2013 Letting ____ Technical Advisory GIFE Update Req'd.? Y ___ N ___ By ____ Addition or ____ Revision Frequency Manual Update Req'd? Y___N___ By ____ Addition or ____ Revision Received FHWA Approval? YES

Ms. Phillips
Date: 09/20/12

SPECIFICATION, SPECIAL PROVISIONS AND DRAWINGS

REVISION TO STANDARD DRAWINGS

PROPOSAL TO STANDARDS COMMITTEE

PROBLEM(S) ENCOUNTERED: A review of Standard Drawing 706-TTFC-01 through -03 revealed an error in the location of a section and consequently, an incorrect bill of materials.

PROPOSED SOLUTION: Revise the drawings to show the correct location of the section and quantities in the bill of materials. See attached markups and final drafts of proposed revised drawings.

APPLICABLE STANDARD SPECIFICATIONS: none

APPLICABLE STANDARD DRAWINGS: 706-TTFC-01 through -03

APPLICABLE DESIGN MANUAL SECTION: none

APPLICABLE SECTION OF GIFE: none

APPLICABLE RECURRING SPECIAL PROVISIONS: none

PAY ITEMS AFFECTED: none

Submitted By: Elizabeth Phillips

Title: Manager, Office of Bridge Standards and Policy

Organization: INDOT

Phone Number: 317-232-6775

Date: August 27, 2012

APPLICABLE SUB-COMMITTEE ENDORSEMENT: none

FIRST DRAFT MINUTES

REVISION TO STANDARD DRAWINGS

EXISTING 706-TTFC-01 CONCRETE BRIDGE RAILING TRANSITION TFC PLAN AND ELEVATION (WITH MARKUPS)

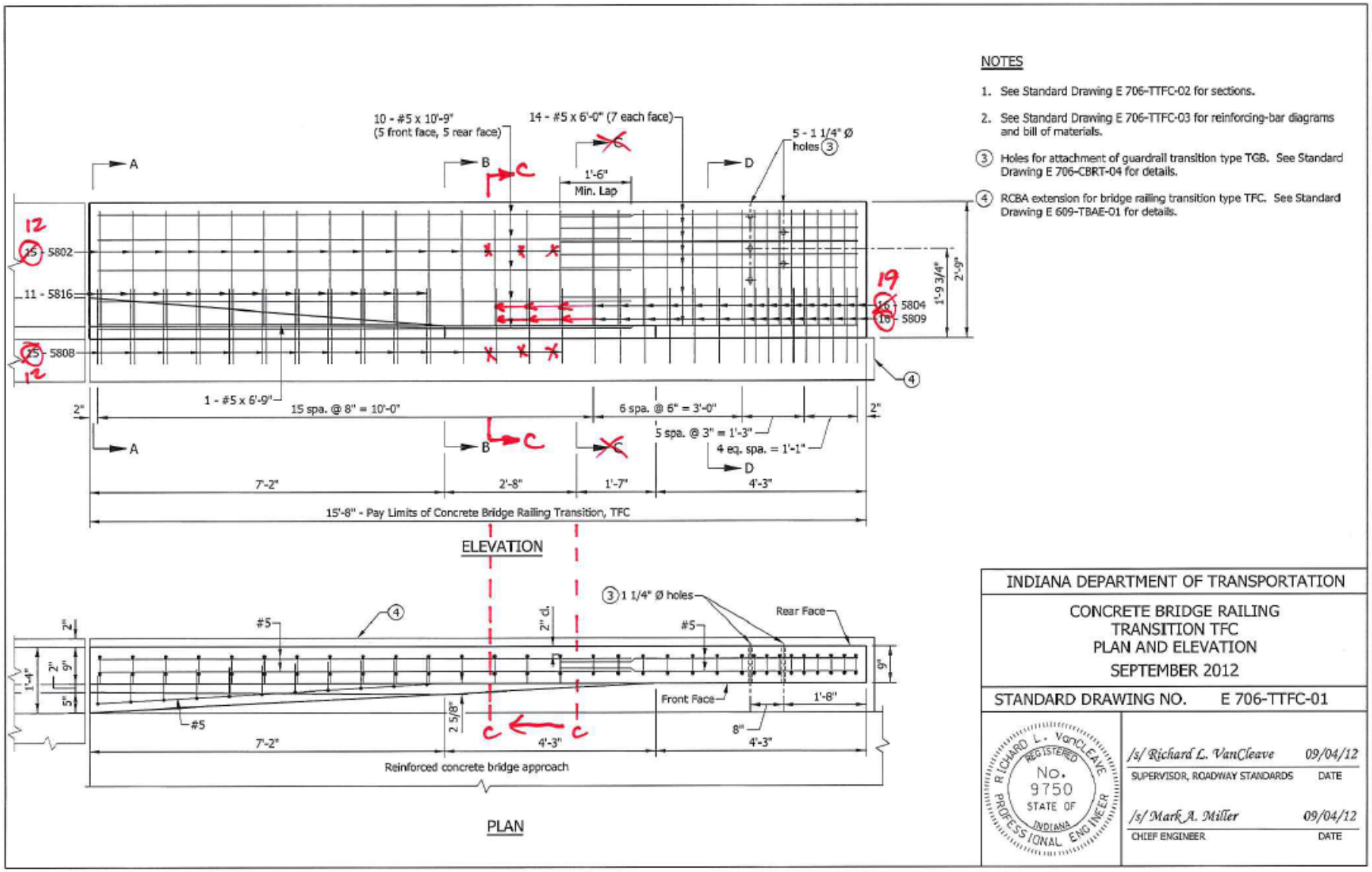

REVISION TO STANDARD DRAWINGS

EXISTING 706-TTFC-02 CONCRETE BRIDGE RAILING TRANSITION, TFC SECTIONS (WITH MARKUPS)

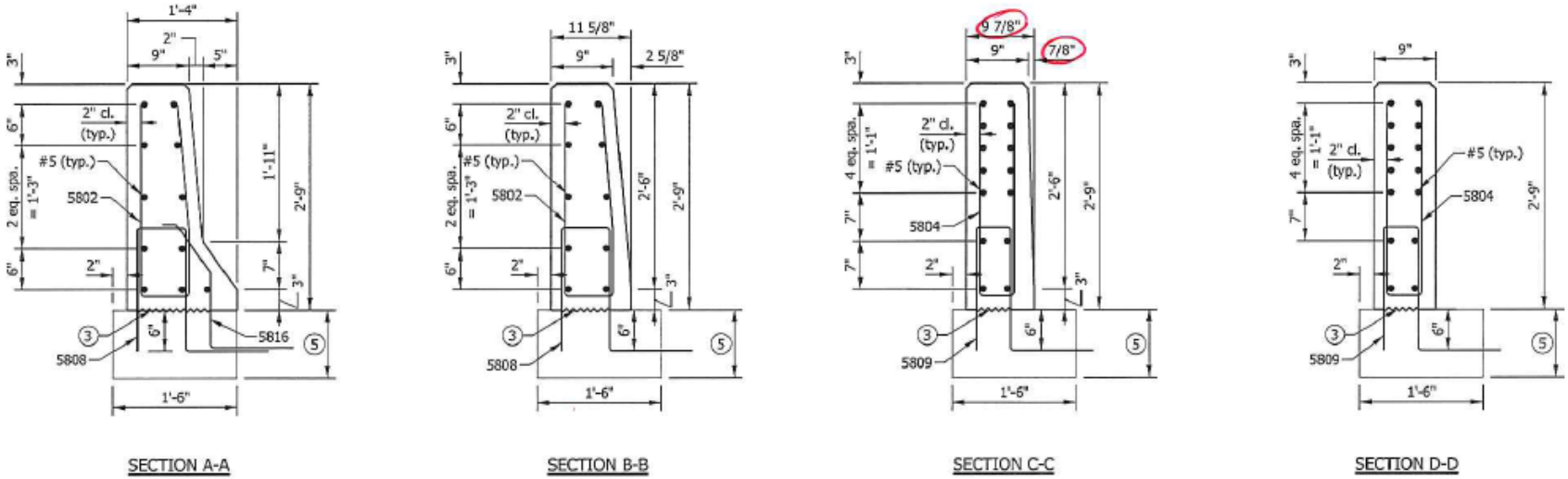

NOTES

1. See Standard Drawing E 706-TTFC-01 for elevation and plan.
2. All chamfered edges shall be 3/4".
3. Construction joint type A. See Standard Drawing E 702-CJTA-01 for details.
4. See Standard Drawing E 706-TTFC-03 for reinforcing-bar diagrams.
5. RCBA extension for bridge railing type TFC. See Standard Drawing E 609-TBAE-01 for details.

INDIANA DEPARTMENT OF TRANSPORTATION

CONCRETE BRIDGE RAILING TRANSITION, TFC SECTIONS

SEPTEMBER 2012

STANDARD DRAWING NO. E 706-TTFC-02

RICHARD L. VANCLEAVE REGISTERED No. 9750 STATE OF INDIANA PROFESSIONAL ENGINEER

/s/ Richard L. VanCleave 09/04/12
SUPERVISOR, ROADWAY STANDARDS DATE

/s/ Mark A. Miller 09/04/12
CHIEF ENGINEER DATE

REVISION TO STANDARD DRAWINGS

EXISTING 706-TTFC-03 CONCRETE BRIDGE RAILING TRANSITION, TFC (WITH MARKUPS)

NOTE

1. See Standard Drawing E 703-BRST-01 for reinforcing-bar bending details and notes.

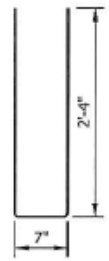

5802 x 5'-3"

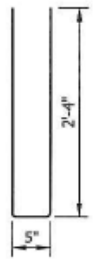

5804 x 5'-1"

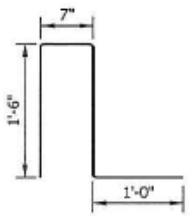

5808 x 4'-7"

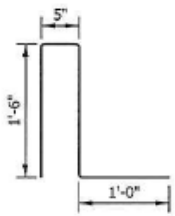

5809 x 4'-5"

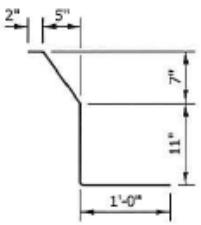

5816 x 2'-10"

BILL OF MATERIALS			
Quantities are for one concrete bridge railing transition type TFC			
EPOXY-COATED REINFORCING STEEL			
MARK OR SIZE	NO. OF BARS	LENGTH	WEIGHT
5802	15	5'-3"	
5804	16	5'-1"	
5808	15	4'-7"	
5809	16	4'-5"	
5816	11	2'-10"	
#5	10	10'-9"	
#5	1	6'-9"	
#5	14	6'-0"	
Total Epoxy-Coated Reinforcing Steel			552 LBS
MISCELLANEOUS			
Concrete, Class C			1.2 CYS
Surface Seal			100 SFT

INDIANA DEPARTMENT OF TRANSPORTATION

CONCRETE BRIDGE RAILING TRANSITION, TFC

SEPTEMBER 2012

STANDARD DRAWING NO. E 706-TTFC-03

RICHARD L. VanCLEAVE REGISTERED No. 9750 STATE OF INDIANA PROFESSIONAL ENGINEER

/s/ Richard L. VanCleave 09/04/12
SUPERVISOR, ROADWAY STANDARDS DATE

/s/ Mark A. Miller 09/04/12
CHIEF ENGINEER DATE

REVISION TO STANDARD DRAWINGS

706-TTFC-01 CONCRETE BRIDGE RAILING TRANSITION TFC PLAN AND ELEVATION (DRAFT)

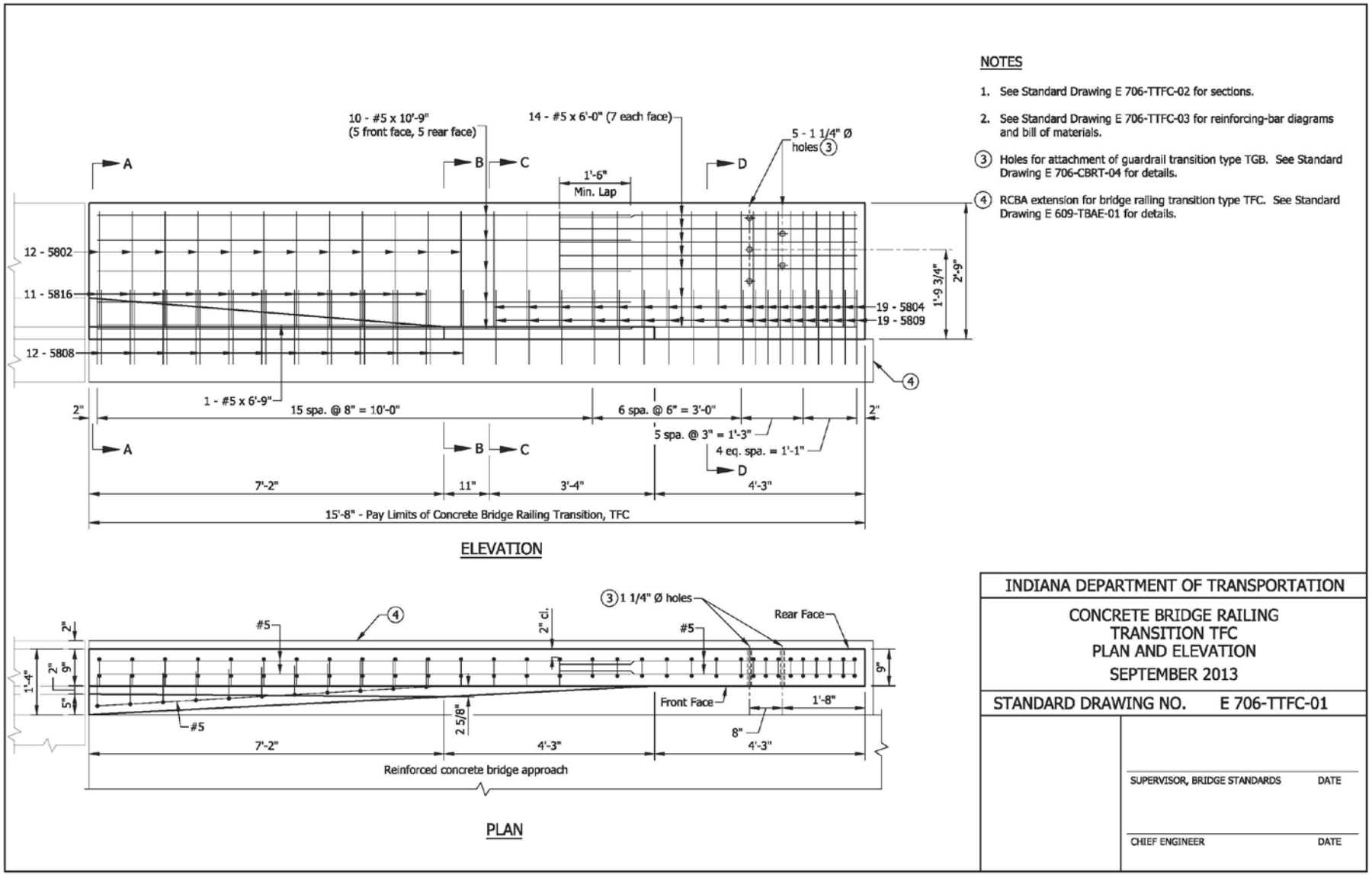

REVISION TO STANDARD DRAWINGS

706-TTFC-02 CONCRETE BRIDGE RAILING TRANSITION, TFC SECTIONS (DRAFT)

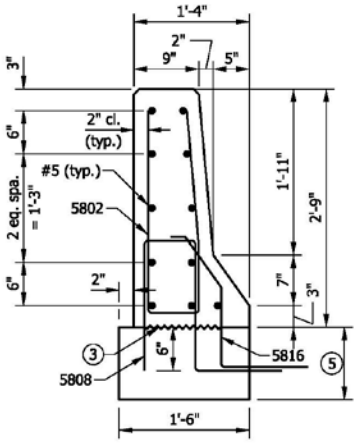

SECTION A-A

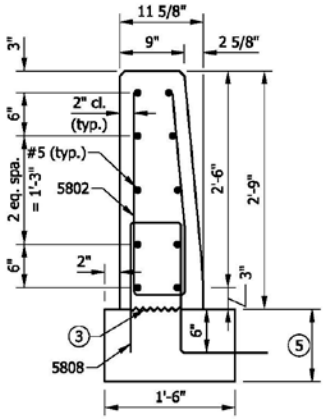

SECTION B-B

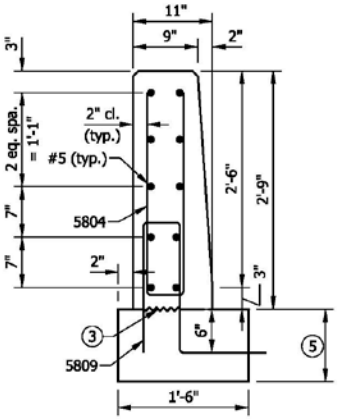

SECTION C-C

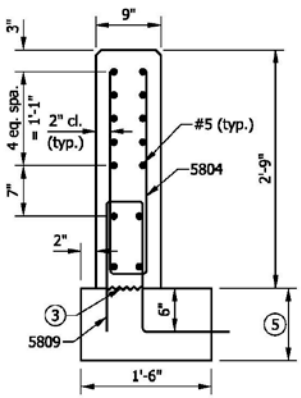

SECTION D-D

NOTES

1. See Standard Drawing E 706-TTFC-01 for elevation and plan.
2. All chamfered edges shall be 3/4".
3. Construction joint type A. See Standard Drawing E 702-CJTA-01 for details.
4. See Standard Drawing E 706-TTFC-03 for reinforcing-bar diagrams.
5. RCBA extension for bridge railing type TFC. See Standard Drawing E 609-TBAE-01 for details.

INDIANA DEPARTMENT OF TRANSPORTATION

CONCRETE BRIDGE RAILING
TRANSITION, TFC
SECTIONS

SEPTEMBER 2013

STANDARD DRAWING NO. E 706-TTFC-02

SUPERVISOR, BRIDGE STANDARDS DATE

CHIEF ENGINEER DATE

REVISION TO STANDARD DRAWINGS

706-TTFC-03 CONCRETE BRIDGE RAILING TRANSITION, TFC (DRAFT)

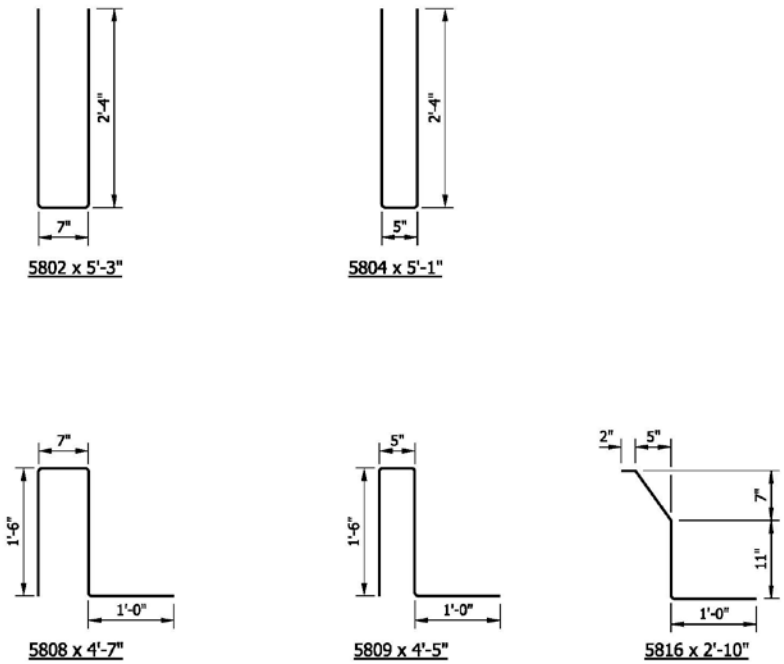

NOTE

1. See Standard Drawing E 703-BRST-01 for reinforcing-bar bending details and notes.

BILL OF MATERIALS			
Quantities are for one concrete bridge railing transition type TFC			
EPOXY-COATED REINFORCING STEEL			
MARK OR SIZE	NO. OF BARS	LENGTH	WEIGHT
5802	12	5'-3"	
5804	19	5'-1"	
5808	12	4'-7"	
5809	19	4'-5"	
5816	11	2'-10"	
#5	10	10'-9"	
#5	1	6'-9"	
#5	14	6'-0"	
Total Epoxy-Coated Reinforcing Steel			551 LBS
MISCELLANEOUS			
Concrete, Class C			1.2 CYS
Surface Seal			100 SFT

INDIANA DEPARTMENT OF TRANSPORTATION

CONCRETE BRIDGE RAILING TRANSITION, TFC

SEPTEMBER 2013

STANDARD DRAWING NO. E 706-TTFC-03

SUPERVISOR, BRIDGE STANDARDS DATE

CHIEF ENGINEER DATE

REVISION TO STANDARD DRAWINGS

706-TTFC-01 CONCRETE BRIDGE RAILING TRANSITION TFC PLAN AND ELEVATION
706-TTFC-02 CONCRETE BRIDGE RAILING TRANSITION, TFC SECTIONS
706-TTFC-03 CONCRETE BRIDGE RAILING TRANSITION, TFC

DISCUSSION: Ms. Phillips presented this item as shown and as described in the proposal page, and made a motion that this item be approved as submitted. Mr. Cales seconded that motion. Ms. Phillips then explained the revisions as shown attached above, and how the bill of materials is affected. A minor revision was recommended for section C-C, that the longitudinal bars should not be shown. Ms. Phillips will have that corrected.

Mr. Miller asked of there were any other comments. Hearing none, this item was approved as revised.

FIRST DRAFT MINUTES

Motion: Ms. Phillips Second: Mr. Cales Ayes: 7 Nays: 0	Action: _____ Passed as Submitted __X__ Passed as Revised _____ Withdrawn
Standard Specifications Sections affected: 706. Recurring Special Provision affected: NONE Standard Sheets affected: 706-TTFC-01; -03. Design Manual Sections affected: NONE GIFE Sections cross-references: NONE	_____ 2014 Standard Specifications Book _____ Revise Pay Items List _____ Create RSP (No._____) Effective _____ Letting RSP Sunset Date: _____ _____ Revise RSP (No._____) Effective _____ Letting RSP Sunset Date: _____ Standard Drawing Effective Sept. 01, 2013 __X__ Create RPD (No. 706-B-201d) Effective Jan. 01, 2013 Letting _____ Technical Advisory GIFE Update Req'd.? Y ___ N ___ By _____ Addition or _____ Revision Frequency Manual Update Req'd? Y___N___ By _____ Addition or _____ Revision Received FHWA Approval? YES