Mr. Vancleave
Date: 11/16/12

SPECIFICATION, SPECIAL PROVISIONS AND DRAWINGS

REVISION TO STANDARD SPECIFICATIONS AND STANDARD DRAWINGS

PROPOSAL TO STANDARDS COMMITTEE

PROBLEM(S) ENCOUNTERED: Existing std drawings 802-SNWW-1 thru 11 and 802-SNIL 1,2,3,6,7 are to be deleted. The new proposed standards for the traffic structures details includes the walkway and lighting details; wherever applicable. INDOT standard drawings for the Box Trusses (802-SBTS-1 thru 19) and Sign Cantilevers (802- SNOC 1 thru 5) were eliminated as of 9/1/2009 due to not meeting the latest "AASHTO Standard Specifications for Structural Supports for Highway Signs, Luminaires, and Traffic Signals" requirements.

To view: Existing std drawings 802-SNWW-1 thru 11 and 802-SNIL 1, 2, 3, 6, 7(to be deleted) at http://www.in.gov/dot/div/contracts/standards/drawings/sep12/e/sep800.htm

PROPOSED SOLUTION: Listed below Sign structures were designed meeting the latest AASHTO design code. New sets of the standard drawings were developed including details of foundation and walkway; wherever applicable.
Sign Cantilever Structures; Sign Box Trusses; Dynamic Message Sign Structure

APPLICABLE STANDARD SPECIFICATIONS: 802, 910

APPLICABLE STANDARD DRAWINGS: New Standard Drawings E 802-SBTS-01 thru 29, E 802-DMSS-01 thru 23, E802-SCLS-01 thru 22

APPLICABLE DESIGN MANUAL SECTION: 502

APPLICABLE SECTION OF GIFE: N.A.

APPLICABLE RECURRING SPECIAL PROVISIONS: N.A.

PAY ITEMS AFFECTED: Revision to related pay items is in the attached 802 revision.

Submitted By: Richard Vancleave

Title: Roadway Policy and Standard Supervisor

Organization: INDOT

Phone Number: 317-232-5347

Date: 10/31/2012

APPLICABLE SUB-COMMITTEE ENDORSEMENT: Ad hoc review by industry, subcommittee from INDOT traffic section, Traffic System Division.

FIRST DRAFT MINUTES PART 2

REVISION TO STANDARD SPECIFICATIONS AND STANDARD DRAWINGS

SECTION 802 - SIGNS
802.06 PLACING CONCRETE
802.07(b) STRUCTURAL FRAMES
802.08 INSTALLING SIGNS
802.11 METHOD OF MEASUREMENT
802.12 BASIS OF PAYMENT

The Standard Specifications are revised as follows:

SECTION 802, BEGIN LINE 67, DELETE AND INSERT AS FOLLOWS:

802.06 Placing Concrete

Placing concrete shall be in accordance with 702, except that foundations incorporated into sections of concrete barrier wall shall receive a finish in accordance with 702.21. Exposed concrete shall have a smooth surface and beveled edges.

Anchor bolt alignment shall be maintained during concrete placement. Temporary positioning plate and associated nuts shall be removed upon completion of the foundation. The threads shall be protected during concrete placement. Any damage to galvanizing~~ing~~ed coating shall be repaired prior to assembly.

Conduit and grounding shall be in accordance with 807.

802.07 Installing Supports

(a) Posts

Posts shall be vertical after installation. All damaged posts shall be removed and replaced with an acceptable post.

Square sign post foundations shall be reinforced anchor base or unreinforced anchor base as shown on the plans. If sign post type A or sign post type B is specified, square sign posts may be used. Splicing of square steel sign posts will not be permitted.

In locations where class X excavation is encountered, the Engineer will determine the design for the installation of foundations. If the total length of the anchor bolts cannot be used, they shall be cut off. A steel plate measuring 6 by 6 by 1/2 in. ~~(150 by 150 by 13 mm)~~, shall be welded to the bottom of the bolts. The plate shall have a hole cut which allows the bolt to pass through it and the plate and bolt shall be completely welded together around the circumference of the bolt on both sides of the plate. No butt welding is allowed. The length of the bolts shall allow the plate to be covered by 3 to 4 in. ~~(75 to 100 mm)~~ of concrete at the bottom of the foundation.

(b) ~~Structural Frames~~*Overhead Sign Structures*

When erection of the structure has been started, it shall be completed the same day. The structure shall be loaded, to prevent vibration, by attaching signs or lighting supports the same day.

FIRST DRAFT MINUTES PART 2

REVISION TO STANDARD SPECIFICATIONS AND STANDARD DRAWINGS

SECTION 802 - SIGNS
802.06 PLACING CONCRETE
802.07(b) STRUCTURAL FRAMES
802.08 INSTALLING SIGNS
802.11 METHOD OF MEASUREMENT
802.12 BASIS OF PAYMENT

An oxidation inhibitor in accordance with 802.07(b)4 shall be applied to all surfaces that mate with a dissimilar material.

Fasteners for chord splice connections shall be high-strength bolts confirming to AASTM A 325 with matching lock nuts having nylon or steel inserts. Installation shall be in accordance with 711.65. Other bolts and hardware shall confirm to the requirements of 910.19.

Fasteners shall be tightened by turn-of-nut tightening, calibrated wrench tightening, or direct tension indicator tightening. The calibrated wrench shall be calibrated by an acceptable tension measuring device such as a Skidmore-Wilhelm.

The base plate bolt tightening shall be as follows:

a. Lower nuts and washers shall be in full contact with the base plate,

b. The top nuts shall be tightened to 1/6 turn beyond snug fit,

c. The lower nuts shall be retightened to assure that full contact with the base plate has been maintained.

Damage that is detrimental to the structural integrity of the frame or aesthetic appearance shall be repaired.

~~Field welding of aluminum shall be in accordance with 803. Field welding of steel shall be in accordance with 711.32.~~ *No field welding will be allowed.*

The grounding connection shall be located 12 in. ~~(300 mm)~~ from the bottom of the support and shall be easily accessible from the structure manhole.

Traffic shall be maintained in accordance with 801.16 during installation.

1. Trusses

When placed on blocks to produce the required camber, the truss sections shall fit together at the flange connections with a minimum gap of 1/16 in. ~~(1.5 mm)~~ on any flange assembly. The total of the gaps in any one connection shall not exceed 1/8 in. ~~(3 mm)~~. Gaps shall be shimmed with tapered shims before tightening the flange bolts.

Vertical truss members and vertical diagonals shall be machined to provide a snug tube-to-tube fit to the chord along the entire edge before welding. Horizontal truss

FIRST DRAFT MINUTES PART 2

members and horizontal diagonals shall be slotted for the dimensions shown on the plans and welded to the gusset plates. They shall be sealed against water penetration.

Chord ~~plates~~*flanges* shall be machined from solid rounds. Mating surfaces shall be flat within 1/64 in. ~~(0.4 mm)~~. Flanges shall be given an additional finish if necessary to ensure contact between plates.

The cap bolts used to attach the top caps of end-support columns shall be located so as to miss the J hook.

The camber shown on the plans is for fabrication only. It shall be measured with the truss fully supported. The allowable camber tolerance is 25% of the specified camber value.

All signs and walkway brackets shall be placed as close to the brace points as possible. The Contractor shall verify that the dimensions are suitable for the type of fixture to be supplied.

2. Monotube

The required camber shall be achieved in accordance with the manufacturer's recommendations as detailed on the working drawings.

3. Cantilever Arms

Cantilever arms shall fit together at the flange connections between sections with a minimum gap of 1/16 in. ~~(1.5 mm)~~ on any flange assembly. The total of the gaps in any one connection shall not exceed 1/8 in. ~~(3 mm)~~. *Double arm chords are octagonal tubular shape with 0.14 in. per foot taper. Quadri-chord arms are circular shape with constant diameter.*

4. Bridge Brackets

The location of the sign bracket may be shifted to avoid joints or stiffeners on the bridge. Before placing aluminum in contact with concrete, both the concrete and aluminum surfaces shall be coated with an aluminum-impregnated caulking compound. Where aluminum surfaces are to be placed in contact with steel, the steel surface shall be given 1 coat of zinc chromate paint and the aluminum surfaces shall be coated with an aluminum-impregnated caulking compound before placement. After the bolts have been tightened, the excess caulking compound shall be removed. All openings around the flanges shall be fully painted and shall be flush with the caulking compound.

802.08 Installing Signs

FIRST DRAFT MINUTES PART 2

REVISION TO STANDARD SPECIFICATIONS AND STANDARD DRAWINGS

SECTION 802 - SIGNS
802.06 PLACING CONCRETE
802.07(b) STRUCTURAL FRAMES
802.08 INSTALLING SIGNS
802.11 METHOD OF MEASUREMENT
802.12 BASIS OF PAYMENT

If new signs are to be installed on existing ~~structural frames~~*overhead sign structures*, the existing mounting hardware, if applicable, may be reused. Bolts, nuts, and washers shall not be reused. Additional new hardware may be required to complete the mounting. All such sign hangers protruding above the new signs shall be cut off flush to the top of the signs. Splicing or overlapping of sign hangers will not be permitted. All unused sign hangers and hardware shall be removed.

SECTION 802, BEGIN LINE 234, DELETE AND INSERT AS FOLLOWS:

802.11 Method of Measurement

Sheet signs and panel signs will be measured by the square foot ~~(square meter)~~. Sheet signs will be measured as the smallest dimensions of a square or rectangle large enough to make the sign. However, triangular or trapezoidal signs will be measured as the smallest triangle or trapezoid required to make the sign.

If the pay unit for sheet signs is shown in the Schedule of Pay Items as each, the number of sheet signs specified, including posts, hardware, and erection, will be measured by the number of units installed.

Sign posts will be measured by the linear foot ~~(meter)~~. Square sign posts will be measured from the top of the post to the termination of the post in the anchor base.

Traffic sign support foundations will be measured by the number of units of each type installed. No reduction will be made in a unit if class X material is encountered during foundation excavation.

If class X material is encountered during foundation excavation, the quantity to be measured will be that authorized and removed and in accordance with 206.10.

Structural steel, breakaway, will be measured by the pound ~~(kilogram)~~. Such measurement will include the weight ~~(mass)~~ of breakaway sections such as stubs, stiffeners, base plates, and fuse plates. For rigid sections, the weight ~~(mass)~~ of the base plate will be included.

Reference posts, including post, sign, and hardware, will be measured by the number of units installed.

Backfill of traffic sign support foundations will be measured in accordance with 211.09.

Overhead sign structures ~~and bridge bracket assemblies~~ will be measured by the number of units of each type installed.

FIRST DRAFT MINUTES PART 2

REVISION TO STANDARD SPECIFICATIONS AND STANDARD DRAWINGS

SECTION 802 - SIGNS
802.06 PLACING CONCRETE
802.07(b) STRUCTURAL FRAMES
802.08 INSTALLING SIGNS
802.11 METHOD OF MEASUREMENT
802.12 BASIS OF PAYMENT

Overhead sign structures to be removed will be measured by the number of structures removed.

802.12 Basis of Payment

The accepted quantities of sheet signs and panel signs will be paid for at the contract unit price per square feet ~~(square meter)~~, of the type and thickness specified, with legend, complete in place.

Sign post will be paid for at the contract unit price per linear foot ~~(meter)~~ for the type specified.

Structural steel, breakaway, will be paid for at the contract unit price per pound ~~(kilogram)~~.

Ground mounted sign support foundations will be paid for at the contract unit price per each type specified.

Reference posts will be paid for at the contract unit price per each, complete in place.

Payment for class X material encountered during a foundation excavation will be made in accordance with 206.11.

Payment for backfill of support foundations will be made in accordance with 211.10.

The removal of signs, overhead structures, and sign assemblies, will be paid for at the contract unit price per each.

Payment will be made under:

Pay Item Pay Unit Symbol

Box Truss Sign Structure Foundation, _____ .....EACH
type

~~Bridge Bracket Assembly .....EACH~~

Cable Span Sign Structure Foundation, _____ .....EACH
type

Cantilever Sign Support Foundation, _____.....EACH
type

FIRST DRAFT MINUTES PART 2

REVISION TO STANDARD SPECIFICATIONS AND STANDARD DRAWINGS

SECTION 802 - SIGNS
802.06 PLACING CONCRETE
802.07(b) STRUCTURAL FRAMES
802.08 INSTALLING SIGNS
802.11 METHOD OF MEASUREMENT
802.12 BASIS OF PAYMENT

Overhead Balanced Cantilever Sign Structure Foundation, _____ .....EACH
type
Overhead Sign Structure, *Box Truss* _____ .....EACH
type
Overhead Sign Structure, Cantilever _____ ..... *EACH*
type
Overhead Sign Structure, Tri-chord _____ ..... *EACH*
type
Overhead Sign Structure, Butterfly Cantilever ..... *EACH*
Overhead Sign Structure, Bridge Bracket Assembly..... *EACH*
Overhead Sign Structure, Monotube..... *EACH*
Overhead Sign Structure, _____, Remove.....EACH
type
Reference Post.....EACH
Sign and Supports, Wide Flange, Remove.....EACH
Sign Post, _____.....LFT ~~(m)~~
type
Sign Post, Square, _____, Reinforced Anchor Base.....LFT ~~(m)~~
type
Sign Post, Square, _____, Unreinforced Anchor Base .....LFT ~~(m)~~
type
Sign, Double Faced, Sheet, With Legend, _____ ..... SFT ~~(m2)~~
thickness
Sign, Overhead, Remove.....EACH
Sign, Panel, Relocate.....EACH
Sign, Panel, Remove .....EACH
Sign, Panel, With Legend..... SFT ~~(m2)~~
Sign, Sheet Assembly, Relocate.....EACH
Sign, Sheet, and Supports, Remove .....EACH
Sign, Sheet, Relocate.....EACH
Sign, Sheet, Remove .....EACH
Sign, Sheet, With Legend.....EACH
Sign, Sheet, With Legend, _____..... SFT ~~(m2)~~
thickness
Structural Steel, Breakaway .....LBS ~~(kg)~~
Wide Flange Sign Post Support Foundation, _____ .....EACH
type

The cost of staking sign and sign structure locations, including materials and labor, shall be included in the cost of the pay items in this section.

FIRST DRAFT MINUTES PART 2

REVISION TO STANDARD SPECIFICATIONS AND STANDARD DRAWINGS

SECTION 802 - SIGNS
802.06 PLACING CONCRETE
802.07(b) STRUCTURAL FRAMES
802.08 INSTALLING SIGNS
802.11 METHOD OF MEASUREMENT
802.12 BASIS OF PAYMENT

The cost of all hardware necessary to assemble and attach the sign to its structural supports, all legend, and adjustments necessary to eliminate specular reflection shall be included in the cost of sheet sign or panel sign.

The cost of all hardware to attach the sign to its structural supports, the reflective sheeting on both faces, and all legend shall be included in the cost of double-faced sheet signs.

The cost of all necessary hardware including sign hangers, clips, and U bolts required for the mounting of signs to existing or new overhead sign structures shall be included in the cost of the sign.

The cost of modifying existing hardware to mount a new sign shall be included in the cost of the new sign.

The cost of the reinforced anchor base or unreinforced anchor base, angle bolts, and rivets shall be included in the cost of sign post, square.

The cost of identification markings for signs shall be included in the cost of the sign.

The cost of sign removal, existing post removal, and all mounting hardware necessary to attach the existing sign to new posts, shall be included in the cost of the sign relocation.

The cost of roadway and bridge reference signs and posts to be removed, stored, and reinstalled shall be included in the cost of other pay items, unless otherwise specified. Roadway and bridge reference signs which are damaged by the Contractor shall be replaced with no additional payment.

The cost of furnishing and applying aluminum-impregnated caulking compound and zinc chromate paint as required in 802.07, shall be included in the cost of the pay items in this section.

The cost of removal of signs, sign assemblies, sign lighting circuitry, supports, concrete foundations, backfill material, sodding, seeding, and necessary incidentals shall be included in the cost of overhead sign structure, remove.

The replacement of posts damaged by the Contractor's activities shall be without additional payment.

FIRST DRAFT MINUTES PART 2

REVISION TO STANDARD SPECIFICATIONS AND STANDARD DRAWINGS

SECTION 802 - SIGNS
802.06 PLACING CONCRETE
802.07(b) STRUCTURAL FRAMES
802.08 INSTALLING SIGNS
802.11 METHOD OF MEASUREMENT
802.12 BASIS OF PAYMENT

The cost of concrete, reinforcement, stub, anchor bolts, conduit, and all necessary hardware shall be included in the cost of the support foundation.

The cost of cutting the reinforcing bars and anchor bolts, furnishing the steel plate and welding the plate to the ends of the anchor bolts when class X excavation is encountered shall be included in the cost of the pay items in this section.

No additional payment will be made if square sign posts are used in lieu of type A or type B posts.

The cost of excavation, except for class X material, and necessary incidentals shall be included in the cost of the pay items in this section.

The cost of walkway assembly where applicable shall be included in the cost of overhead sign structure.

FIRST DRAFT MINUTES PART 2

REVISION TO STANDARD SPECIFICATIONS AND STANDARD DRAWINGS

SECTION 910 – METAL MATERIALS
910.19 OVERHEAD SIGN STRUCTURES

The Standard Specifications are revised as follows:

SECTION 910, BEGIN LINE 1266, DELETE AND INSERT AS FOLLOWS:

910.19 Overhead Sign Structures

The complete structure with signs in place shall be able to withstand wind pressure in accordance with AASHTO Standard Specifications for Structural Supports for Highway Signs, Luminaires and Traffic Signals. The structure shall be designed to resist fatigue of the material in accordance with the AASHTO specifications.

All prefabricated structural units shall be packed so that there is no injury or defacement during transportation to the point of destination.

All bolts, nuts, and washers for bridge bracket assemblies shall be stainless steel in accordance with ASTM F 738M.

Strain poles for cable span signs shall be in accordance with 922.05(a). Each strain pole shall include 3 band type attachments for span wire clamps. Such attachments shall be galvanized in accordance with ASTM A 153. Cable shall be in accordance with 922.06(b). Each cable shall include 3 wire rope clips at each end. Anchor bolts shall be in accordance with 922.05(c)6. All sign mounting hardware except for the extruded aluminum bar shall be galvanized in accordance with ASTM A 153.

Material furnished under this specification shall be covered by a type C certification in accordance with 916.

(a) Aluminum *Trusses for* Overhead Sign Structures, Box Truss and ~~Bridge Attached~~*Dynamic Message Sign Structure Truss*

Extruded tubes *and other shapes* shall be of aluminum in accordance with ASTM B 221~~ (B 221M)~~, B 241~~ (B 241M)~~, or B 429, alloy 6061-T6. All other castings shall be of aluminum in accordance with ASTM B 26~~ (B 26M)~~, alloy 356.0-T6. *Gusset, flange and stiffner* ~~P~~*p*lates shall be of aluminum in accordance with ASTM B 209~~ (B 209M)~~, alloy 6061-T6. Plates shall be free of sharp edges and irregularities.

~~*High strength bolts, nuts and washers for chord splice connections, shall be in accordance with 910.02(g) and shall be galvanized in accordance with AASHTO M 232.*~~

~~Welding material and procedures shall be in accordance with 803 and applicable AWS provisions.~~

Bolts, nuts, screws, and flat washers shall be passivated type 304 stainless steel. Bolts and screws shall be in accordance with ASTM A 193~~ (A 193M)~~, grade B8. Hexagon nuts and washers shall be in accordance with ASTM A 194~~ (A 194M)~~, grade 8. High strength bolts, nuts and washers for chord splice connections, *with matching~~,~~ lock nuts having ~~nylon or~~ steel inserts*, shall be in accordance with 910.02(g) and shall be galvanized in accordance with AASHTO M 232, *class C or D*.

FIRST DRAFT MINUTES PART 2

~~The J-hook shall consist of one 3/8-in. (10-mm) steel bar in accordance with ASTM A 307. It shall be spot welded to the inside of the end-support member. The J hook shall be hot-dip galvanized prior to welding or in the final assembly with the support column.~~

Neoprene pads shall be ultraviolet rated *and shall conf~~i~~orm to the requirements in 915.04*.

The safety cable shall be in accordance with 922.06(b).

~~Anchor bolts, nuts and washers shall be in accordance with ASTM F 1554, Grade 36. A hexagon nut, leveling nut, and flat washer shall be furnished with each anchor bolt. Top ends of anchor bolts and associated hardware as shown on the plans, shall be coated in accordance with ASTM A 153 or be mechanically galvanized and conform to the coating thickness, adherence, and quality requirements of ASTM A 153, class C.~~

Welding material and procedures shall be in accordance with 803 and applicable AWS provisions.

Certified proof of the qualifications for a minimum of 2 welders shall be presented after the contract is awarded and before fabrication is started. This certification shall be from a commercial or public testing laboratory and qualifications shall be based on welding of aluminum alloy, 6061-T6 with consumable electrode type welding using aluminum alloy ER5356 filler material. Welders shall qualify by passing the requirements of "Procedure and Performance Tests of Qualification Standard for Welding Procedures, Welders, and Welding Operations", latest edition, formulated by the Boiler and Pressure Vessel Committee of the American Society of Mechanical Engineers.

Welding shall be checked ~~carefully~~ by visual inspection. Poor welding workmanship as noted by visual inspection shall be ~~sufficient cause for~~ reject~~ion~~*ed*.

Each complete structure shall be ~~warranted that it is~~ free from any misfits or structural deficiencies prior to shipment.

(b) Steel Overhead Sign Structures, ~~Box Truss~~, Cantilever, Monotube, *Tri-Chord*, ~~and~~ Bridge Attached, *and End Supports for Box Truss and Dynamic Message Sign Structure*

End support members for Box Truss and Dynamic Message Sign Structure shall be fabricated from constant cross section tubular steel or extruded steel shapes as indicated on the drawings. Sections used for end support columns, diagonal and horizontal members shall be constant cross section tubular members in accordance with ASTM A 53, type E or S, grade B, minimum yield strength of 35,000 psi. Constant cross section tubular steel with greater yield strength may be used~~,~~ with written approval,

FIRST DRAFT MINUTES PART 2

however, structural dimensions must remain as shown on the plans. Sections used for cross support beams shall be constant cross section extruded W-shapes in accordance with ASTM A 709 Grade 36. Base plates shall be in accordance with ASTM A 36. Base plates for columns shall develop the full strength of the columns. Structures shall be galvanized after fabrication in accordance with ASTM A 123.

Support columns for the cantilever structure shall be fabricated from constant cross section tubular steel as indicated on the drawings. Column sections shall be in accordance with ASTM A 53, type E or S, grade B as shown on the plans. Members shall have minimum yield strength of 35,000 psi. Constant cross section tubular steel with greater yield strength may be used, with written approval, however, structural dimensions must remain as shown on the plans. Base plates shall be in accordance with ASTM A 36. Base plates shall develop the full strength of the columns.

Cantilever arms shall be either double arms or quadri-chord trusses as shown on the plans.

Cantilever arms shall be fabricated from octagonal tubular member with 0.14 in. per foot taper and in accordance with ASTM A 709 Grade 36. Quadric-chord arms shall be of constant cross section tubular members in accordance with ASTM A 53, Type E or S, Grade B as shown on the plans. Members shall have minimum yield strength of 35,000 psi. Steel with greater yield strength may be used, with written approval, however, structural dimensions must remain as shown on the plans. Structures shall be galvanized after fabrication in accordance with ASTM A 123. Plates shall be free of sharp edges and irregularities.

High strength bolts, nuts and washers for chord to column connections, with matching lock nuts having ~~nylon or~~ steel inserts, shall be in accordance with 910.02(g) and shall be galvanized in accordance with AASHTO M 232, class C or D.

Bolts, U-bolts, nuts, screws, and flat washers shall be passivated type 304 stainless steel. Bolts and screws shall be in accordance with ASTM A 193, grade B8. Hexagon nuts and washers shall be in accordance with ASTM A 194, grade 8.

~~Steel sections used for upright members, cross beams, or horizontal members shall be either tapered or constant cross section tubular members as specified herein. The tubular members may be either circular or multi-sided.~~

~~Box truss and b~~*B*ridge attached structures shall be fabricated from constant cross section tubular steel in accordance with ASTM A 53, type E or S, grade B (minimum yield strength of 35,000 psi). Constant cross section tubular steel with greater yield strength may be used, with written approval. However, structural dimensions must remain as shown on the plans. Structures shall be galvanized after fabrication in accordance with ASTM A 123.

FIRST DRAFT MINUTES PART 2

REVISION TO STANDARD SPECIFICATIONS AND STANDARD DRAWINGS

SECTION 910 – METAL MATERIALS
910.19 OVERHEAD SIGN STRUCTURES

Tri-chord truss, ~~cantilever,~~ and monotube structures shall be made of tapered tubular members in accordance with either ASTM A 595 or ASTM A 572, grade 50 ~~(A 572M, grade 345)~~, or of constant cross section tubular members in accordance with API High Test Line Pipe, grade X-52. Members shall have a minimum yield strength of 50,000 psi ~~(345 MPa)~~. Structures shall be galvanized after fabrication in accordance with ASTM A 123.

The J hook shall consist of one 3/8-in. steel bar in accordance with ASTM A 307. It shall be spot welded to the inside of the end-support member. The J hook shall be hot-dip galvanized prior to welding or in the final assembly with the support column.

Anchor bolts, nuts, and washers shall be in accordance with ASTM F 1554, ~~G~~grade 36. A hexagon nut, leveling nut, and flat washer shall be furnished with each anchor bolt. Top ends of anchor bolts and associated hardware as shown on the plans, shall be coated in accordance with ASTM A 153 or be mechanically galvanized and conform to the coating thickness, adherence, and quality requirements of ASTM A 153, class C.

Base plate skirts shall be 10 gage ~~thick~~ galvanized steel.

Welding material and procedures shall be in accordance with 711.32 and applicable AWS provisions

~~*Certified proof of the qualifications for a minimum of 2 welders shall be presented after the contract is awarded and before fabrication is started. This certification shall be from a commercial or public testing laboratory and qualifications shall be based on welding of aluminum alloy, 6061-T6 with consumable electrode type welding using aluminum alloy ER5356 filler material. Welders shall qualify by passing the requirements of "Procedure and Performance Tests of Qualification Standard for Welding Procedures, Welders, and Welding Operations", latest edition, formulated by the Boiler and Pressure Vessel Committee of the American Society of Mechanical Engineers.*~~

Welding shall be checked ~~carefully~~ by visual inspection. Poor welding workmanship as noted by visual inspection shall be sufficient cause for reject~~ioned~~.

Each complete structure shall be warranted that it is free from any misfits or structural deficiencies prior to shipment.

(c) Sign Structure Walkway

Gratings for the walkway shall be of aluminum in accordance with ASTM B 221, alloy 6061-T6 or 6063-T6. Cross bars and bent connecting bars shall be of aluminum in

FIRST MINUTES PART 2

accordance with ASTM B 221, alloy 6061 or 6063 or alloy 3003 confirming to ASTM B 210.

Strain poles shall be anchor bolt type complete with hand-holes and pole top or cap. They shall meet the requirements set out above for cantilever sign structures. Each pole is to include 3 band type attachments for span wire clamps. The band shall be from material in accordance with ASTM A 572, grade 50 ~~(A 572M, grade 345)~~; ASTM A 606; or approved equal. The bands shall not be of the U-bolt type. The poles shall have maximum deflections as shown below when loaded 18 in. ~~(450 mm)~~ from the top with a 100 lb ~~(445 N)~~ load.

Pole Size Deflection

15 in. by 30 in. ~~(380 mm by 910 mm)~~ .....0.16 in. ~~(4.1 mm)~~

14 in. by 26 in. ~~(356 mm by 790 mm)~~ .....0.12 in. ~~(3.0 mm)~~

The steel flanges at the center of the cross beam and at the ends of the horizontal arms shall be fastened to the tapered or straight sections by means of 2 circumferential welds. One of the circumferential welds shall weld the outside of the flange firmly to the tube. The flange connection shall develop fully the strength of the tubular sections being joined together by means of the flange connections.

Gusset, flange, and base plates shall be in accordance with ASTM A 36 ~~(A 36M)~~ and shall be galvanized after fabrication in accordance with ASTM A 123. Base plates for upright poles shall develop the full strength of the poles. Castings for the vertical pole top and horizontal arm and cap shall be in accordance with ASTM A 126 and shall be galvanized with a minimum coating of 2 oz/sq ft ~~(610 g/m^2)~~. Bolts and nuts, except anchor bolts, shall be in accordance with ASTM A 325, Type 1. Two nuts for use in plumbing upright poles shall be furnished with each anchor bolt. Anchor bolts for overhead steel structures shall be in accordance with 910.19(a). Steel bolts, nuts, washers, and the top ends of anchor bolts shall be coated in accordance with ASTM A 153 or be mechanically galvanized and conform to the coating thickness, adherence, and quality requirements of ASTM A 153, class C. Welding shall be in accordance with 711.32.

Beam clamp details and sign support assemblies shall be galvanized in accordance with ASTM A 153. Clamps shall be fabricated of high strength, low alloy steel in accordance with ASTM A 242 ~~(A 242M)~~, ASTM A 606, or approved equal. Stainless steel U-bolts may be used in lieu of the clamps for the attachment of the sign hangers to the arms of double arm cantilevers. The U-bolts shall be in accordance with 910.19(a) for stainless steel hardware.

FIRST DRAFT MINUTES PART 2

REVISION TO STANDARD SPECIFICATIONS AND STANDARD DRAWINGS

PROPOSED NEW 802-DMSS-01 DYNAMIC MESSAGE SIGN STRUCTURE (REVISED)

INDEX

SHEET NO.	SUBJECT
1	Index
2	Plan & Elevation
3	Truss Sections, Member Size Table
4	Table of Dimensions, Spans 34' thru 81'
5	Table of Dimensions, Spans 82' thru 130' & Camber
6	Chord Connections and Weld Details
7	Flange & Chord End Plate Details
8	End Support Upper Chord Connection Details
9	End Support Lower Chord Connection Details
10	End Support Base Plate and I.D. Tag Details
11	End Support Handhole, Top Cap, and J-Hook Details
12	Anchor Plates, Anchor Bolts, and Metal Skirt Details
13	Ladder Details
14	Ladder Details
15	Security Gate Details
16	Walkway Grating Details
17	Walkway Grating Details
18	Walkway Grating Details
19	Wiring Layout Details
20	Spread Foundation at 33" Concrete Barrier Wall
21	Spread Foundation at 45" Concrete Barrier Wall
22	Spread Foundation at Median or Shoulder, 36" Height
23	Spread Foundations Quantities

INDIANA DEPARTMENT OF TRANSPORTATION

DYNAMIC MESSAGE SIGN STRUCTURE
DRAWING INDEX

SEPTEMBER 2013

STANDARD DRAWING NO. E 802-DMSS-01

SUPERVISOR, TRAFFIC DESIGN DATE

CHIEF ENGINEER DATE

REVISION TO STANDARD SPECIFICATIONS AND STANDARD DRAWINGS

PROPOSED NEW 802-DMSS-02 DYNAMIC MESSAGE SIGN STRUCTURE (REVISED)

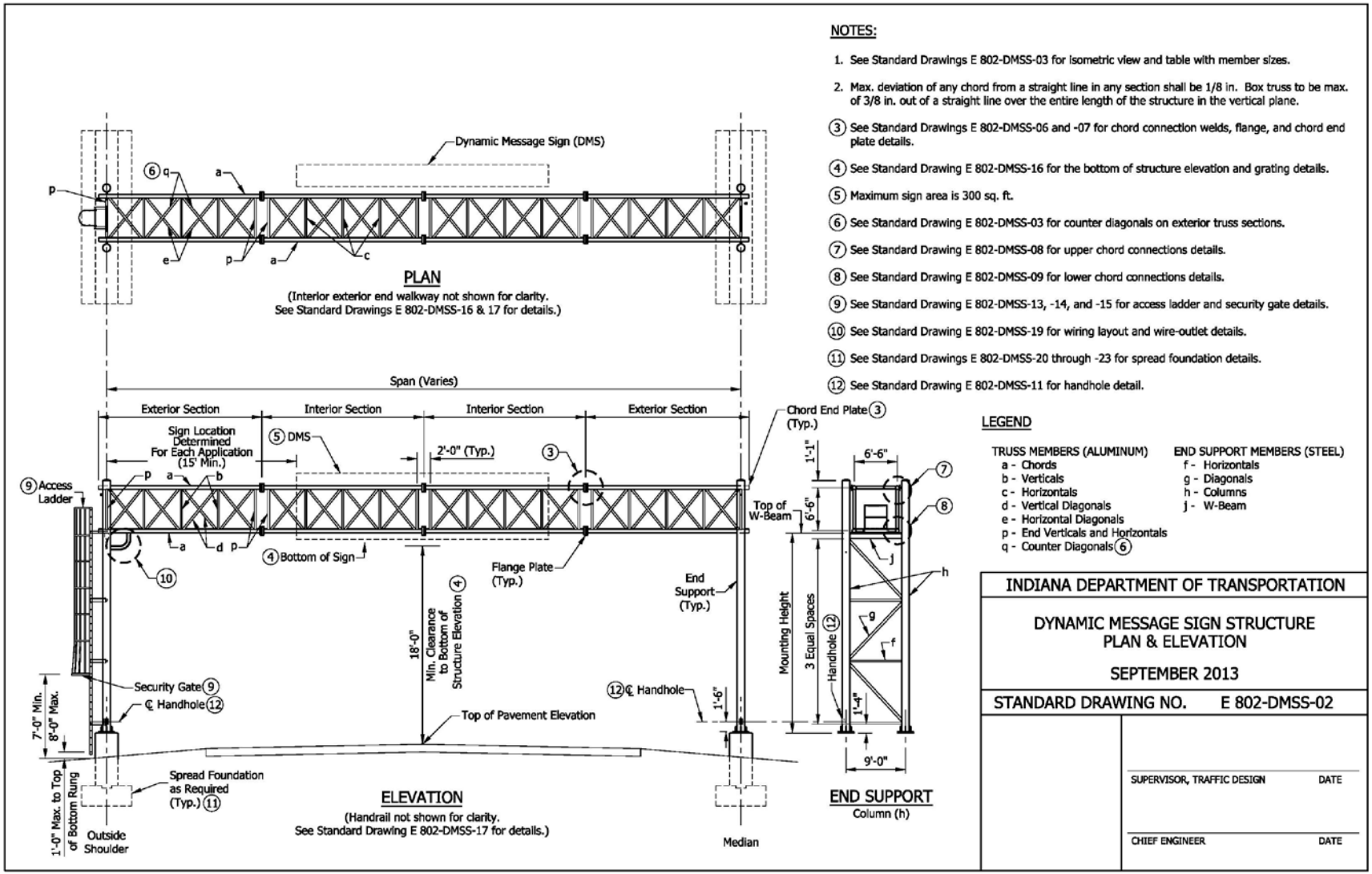

REVISION TO STANDARD SPECIFICATIONS AND STANDARD DRAWINGS

PROPOSED NEW 802-DMSS-03 DYNAMIC MESSAGE SIGN STRUCTURE

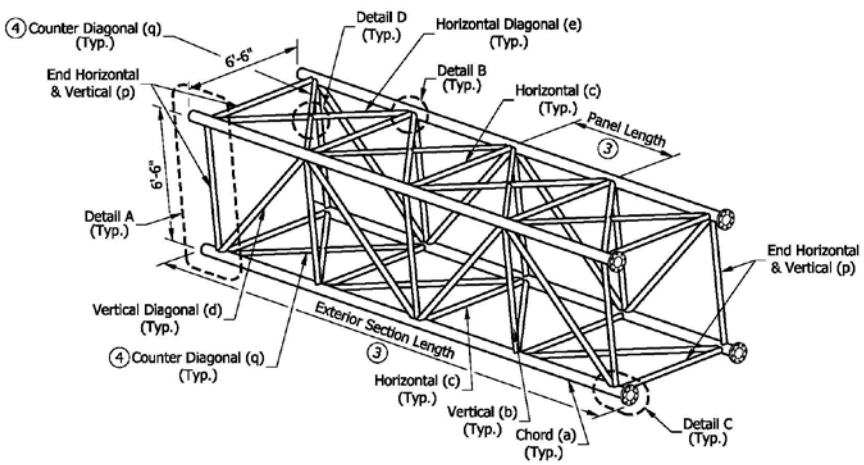

TYPICAL EXTERIOR TRUSS SECTION

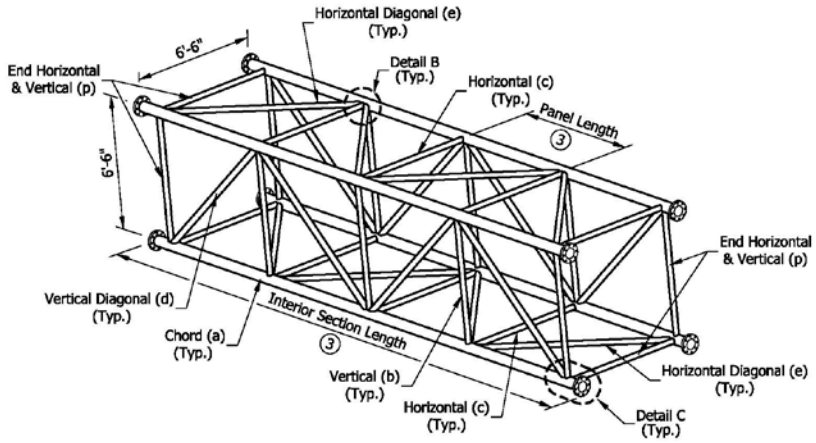

TYPICAL INTERIOR TRUSS SECTION

NOTES:

1. See Standard Drawing E 802-DMSS-06 for Details A through D.
2. Truss members to be aluminum. End support members to be steel. Steel pipe diameters shown in table are nominal pipe sizes.
3. Number of panels and sections varies. See Standard Drawing E 802-DMSS-04 and -05 for recommended dimensions.
4. Counter Diagonal (q) shall be provided in exterior sections at the top of each panel and at the bottom of end panel only as shown. It is not required in interior sections.
5. See Standard Drawing E 802-DMSS-02 for end support members.

MAX. SPAN = 130 ft. MAX. SIGN AREA = 300 sq. ft.
MAX. MOUNTING HEIGHT = 24'-6"

ALUMINUM TRUSS MEMBERS		
MEMBER	MARK	O.D. (IN.) x WALL THK. (IN.)
CHORD	a	7 x 0.375
VERTICAL	b	3 x 0.250
HORIZONTAL	c	4 x 0.250
VERTICAL DIAGONAL	d	3.5 x 0.500
HORIZONTAL DIAGONAL	e	4 x 0.500
END VERTICAL and HORIZONTAL	p	4 x 0.375
COUNTER DIAGONAL (SEE NOTE 4)	q	2.5 x 0.500
STEEL END-SUPPORT MEMBERS		
COLUMN	h	14 x 0.375
HORIZONTAL	f	3.5 x 0.216
DIAGONAL	g	4.5 x 0.438
W-BEAM	j	W10 x 68

INDIANA DEPARTMENT OF TRANSPORTATION

DYNAMIC MESSAGE SIGN STRUCTURE
TRUSS SECTIONS, MEMBER SIZE TABLE

SEPTEMBER 2013

STANDARD DRAWING NO. E 802-DMSS-03

SUPERVISOR, TRAFFIC DESIGN DATE

CHIEF ENGINEER DATE

REVISION TO STANDARD SPECIFICATIONS AND STANDARD DRAWINGS

PROPOSED NEW 802-DMSS-04 DYNAMIC MESSAGE SIGN STRUCTURE

DIMENSIONS FOR DYNAMIC MESSAGE SIGN STRUCTURES (34' THRU 81')

SPAN	EXTERIOR SECTIONS					INTERIOR SECTIONS			
SPAN-TRUSS LENGTH, (FT)	NO. OF EXT. SECTIONS	NO. OF PANELS PER SECTION	VARIABLE END DIMEN.	PANEL LENGTH	SECTION LENGTH	NO. OF INT. SECTIONS	NO. OF PANELS PER SECTION	PANEL LENGTH	SECTION LENGTH
34	1	6	6"	5'-6"	35'-6"	0			
35	1	6	6"	5'-8"	36'-6"	0			
36	2	3	6"	5'-6"	18'-9"	0			
37	2	3	6"	5'-8"	19'-3"	0			
38	2	3	6"	5'-10"	19'-9"	0			
39	2	3	6"	6'-0"	20'-3"	0			
40	2	3	6"	6'-2"	20'-9"	0			
41	2	3	6"	6'-4"	21'-3"	0			
42	2	3	6"	6'-6"	21'-9"	0			
43	2	4	6"	5'-0"	22'-3"	0			
44	2	4	6"	5'-1 1/2"	22'-9"	0			
45	2	4	6"	5'-3"	23'-3"	0			
46	2	4	6"	5'-4 1/2"	23'-9"	0			
47	2	4	6"	5'-6"	24'-3"	0			
48	2	4	6"	5'-7 1/2"	24'-9"	0			
49	2	4	6"	5'-9"	25'-3"	0			
50	2	4	6"	5'-10 1/2"	25'-9"	0			
51	2	4	6"	6'-0"	26'-3"	0			
52	2	4	6"	6'-1 1/2"	26'-9"	0			
53	2	4	6"	6'-3"	27'-3"	0			
54	2	4	6"	6'-4 1/2"	27'-9"	0			
55	2	4	6"	6'-6"	28'-3"	0			
56	2	5	5 1/4"	5'-3 3/4"	28'-9"	0			
57	2	5	6 1/4"	5'-4 3/4"	29'-3"	0			
58	2	5	6"	5'-6"	29'-9"	0			
59	2	5	5 3/4"	5'-7 1/4"	30'-3"	0			
60	2	5	5 1/2"	5'- 8 1/2"	30'-9"	0			
61	2	5	6 1/2"	5'-9 1/2"	31'-3"	0			
62	2	5	6 1/4"	5'-10 3/4"	31'-9"	0			
63	2	5	6"	6'-0"	32'-3"	0			
64	2	5	5 3/4"	6'-1 1/4"	32'-9"	0			
65	2	5	5 1/2"	6'-2 1/2"	33'-3"	0			
66	2	5	5 1/4"	6'-3 3/4"	33'-9"	0			
67	2	5	5"	6'-5"	34'-3"	0			
68	2	5	6"	6'-6"	34'-9"	0			
69	2	4	6"	5'-4"	23'-7"	1	4	5'-4"	23'-4"
70	2	4	6"	5'-5"	23'-11"	1	4	5'-5"	23'-8"
71	2	4	6"	5'-6"	24'-3"	1	4	5'-6"	24'-0"
72	2	4	6"	5'-7"	24'-7"	1	4	5'-7"	24'-4"
73	2	4	6"	5'-8"	24'-11"	1	4	5'-8"	24'-8"
74	2	4	6"	5"-9"	25'-3"	1	4	5"-9"	25'-0"
75	2	4	6"	5'-10"	25'-7"	1	4	5'-10"	25'-4"
76	2	4	6"	5'-11"	25'-11"	1	4	5'-11"	25'-8"
77	2	4	6"	6'-0"	26'-3"	1	4	6'-0"	26'-0"
78	2	4	6"	6'-1"	26'-7"	1	4	6'-1"	26'-4"
79	2	4	6"	6'-2"	26'-11"	1	4	6'-2"	26'-8"
80	2	4	6"	6'-3"	27'-3"	1	4	6'-3"	27'-0"
81	2	4	6"	6'-4"	27'-7"	1	4	6'-4"	27'-4"

NOTES:

1. The table of dimensions for a dynamic message sign structure is divided and put on two Standard Drawings E 802-DMSS-04 and -05. the table shows dimensions with all sections requirements accounted for.
2. All panels on a truss shall be the same length. The minimum panel length for all trusses is 5'-0" and the maximum is 6'-6".
3. A single interior section in a truss shall have an even number of panels to maintain the pattern of the vertical diagonals.
4. Use minimum number of sections for each truss, keeping the maximum section length at 35'-6".
5. See Standard Drawing E 802-DMSS-05 for required camber.

INDIANA DEPARTMENT OF TRANSPORTATION

DYNAMIC MESSAGE SIGN STRUCTURE
TABLE OF DIMENSIONS
SPANS 34' THRU 81'

SEPTEMBER 2013

STANDARD DRAWING NO. E 802-DMSS-04

SUPERVISOR, TRAFFIC DESIGN DATE

CHIEF ENGINEER DATE

REVISION TO STANDARD SPECIFICATIONS AND STANDARD DRAWINGS

PROPOSED NEW 802-DMSS-05 DYNAMIC MESSAGE SIGN STRUCTURE

DIMENSIONS FOR DYNAMIC MESSAGE SIGN STRUCTURES (82' THRU 130')

SPAN	EXTERIOR SECTIONS					INTERIOR SECTIONS			
SPAN-TRUSS LENGTH, (FT)	NO. OF EXT. SECTIONS	NO. OF PANELS PER SECTION	VARIABLE END DIMEN.	PANEL LENGTH	SECTION LENGTH	NO. OF INT. SECTIONS	NO. OF PANELS PER SECTION	PANEL LENGTH	SECTION LENGTH
82	2	4	6"	6'-5"	27'-11"	1	4	6'-5"	27'-8"
83	2	4	6"	6'-6"	28'-3"	1	4	6'-6"	28'-0"
84	2	5	5 3/4"	5'-7 3/4"	30'-5 1/2"	1	4	5'-7 3/4"	24'-7"
85	2	5	6 1/2"	5'-8 1/2"	30'-10"	1	4	5'-8 1/2"	24'-10"
86	2	5	5 1/2"	5'-9 1/2"	31'-2"	1	4	5'-9 1/2"	25'-2"
87	2	5	6 1/4"	5'-10 1/4"	31'-6 1/2"	1	4	5'-10 1/4"	25'-5"
88	2	5	7"	5'-11"	31'-11"	1	4	5'-11"	25'-8"
89	2	5	6"	6'-0"	32'-3"	1	4	6'-0"	26'-0"
90	2	5	5"	6'-1"	32'-7"	1	4	6'-1"	26'-4"
91	2	5	5 3/4"	6'-1 3/4"	32'-11 1/2"	1	4	6'-1 3/4"	26'-7"
92	2	5	6 1/2"	6'-2 1/2"	33'-4"	1	4	6'-2 1/2"	26'-10"
93	2	5	5 1/2"	6'-3 1/2"	33'-8"	1	4	6'-3 1/2"	27'-2"
94	2	5	6 1/4"	6'-4 1/4"	34'-0 1/2"	1	4	6'-4 1/4"	27'-5"
95	2	5	5 1/4"	6'-5 1/4"	34'-4 1/2"	1	4	6'-5 1/4"	27'-9"
96	2	5	6"	6'-6"	34'-9"	1	4	6'-6"	28'-0"
97	2	4	6"	5'-7 1/2"	24'-9"	2	4	5'-7 1/2"	24'-6"
98	2	4	6"	5'-8 1/4"	25'-0"	2	4	5'-8 1/4"	24'-9"
99	2	4	6"	5'-9"	25'-3"	2	4	5'-9"	25'-0"
100	2	4	6"	5'-9 3/4"	25'-6"	2	4	5'-9 3/4"	25'-3"
101	2	4	6"	5'-10 1/2"	25'-9"	2	4	5'-10 1/2"	25'-6"
102	2	4	6"	5'-11 1/4"	26'-0"	2	4	5'-11 1/4"	25'-9"
103	2	4	6"	6'-0"	26'-3"	2	4	6'-0"	26'-0"
104	2	4	6"	6'-0 3/4"	26'-6"	2	4	6'-0 3/4"	26'-3"
105	2	4	6"	6'-1 1/2"	26'-9"	2	4	6'-1 1/2"	26'-6"
106	2	4	6"	6'-2 1/4"	27'-0"	2	4	6'-2 1/4"	26'-9"
107	2	4	6"	6'-3"	27'-3"	2	4	6'-3"	27'-0"
108	2	4	6"	6'-3 3/4"	27'-6"	2	4	6'-3 3/4"	27'-3"
109	2	4	6"	6'-4 1/2"	27'-9"	2	4	6'-4 1/2"	27'-6"
110	2	4	6"	6'-5 1/4"	28'-0"	2	4	6'-5 1/4"	27'-9"
111	2	4	6"	6'-6"	28'-3"	2	4	6'-6"	28'-0"
112	2	5	6"	5'-3"	28'-6"	2	5	5'-3"	28'-3"
113	2	5	7"	5'-3 1/2"	28'-9 1/2"	2	5	5'-3 1/2"	28'-5 1/2"
114	2	5	5 1/2"	5'-4 1/4"	28'-11 3/4"	2	5	5'-4 1/4"	28'-9 1/4"
115	2	5	6 1/2"	5'-4 3/4"	29'-3 1/4"	2	5	5'-4 3/4"	28'-11 3/4"
116	2	5	5"	5'-5 1/2"	29'-5 1/2"	2	5	5'-5 1/2"	29'-3 1/2"
117	2	5	6"	5'-6"	29'-9"	2	5	5'-6"	29'-6"
118	2	5	5"	5'-6 1/2"	29'-10 1/2"	2	5	5'-6 1/2"	29'-8 1/2"
119	2	5	5 1/2"	5'-7 1/4"	30'-2 3/4"	2	5	5'-7 1/4"	30'-0 1/4"
120	2	5	6 1/2"	5'-7 3/4"	30'-6 1/4"	2	5	5'-7 3/4"	30'-2 3/4"
121	2	5	5"	5'-8 1/2"	30'-8 1/2"	2	5	5'-8 1/2"	30'-6 1/2"
122	2	5	6"	5'-9"	31'-0"	2	5	5'-9"	30'-9"
123	2	5	7"	5'-9 1/2"	31'-3 1/2"	2	5	5'-9 1/2"	30'-11 1/2"
124	2	5	5 1/2"	5'-10 1/4"	31'-5 3/4"	2	5	5'-10 1/4"	31'-3 1/4"
125	2	5	6 1/2"	5'-10 3/4"	31'-9 1/4"	2	5	5'-10 3/4"	31'-5 3/4"
126	2	5	5"	5'-11 1/2"	31' -11 1/2"	2	5	5'-11 1/2"	31'-9 1/2"
127	2	5	6"	6'-0"	32'-3"	2	5	6'-0"	32'-0"
128	2	5	7"	6'-0 1/2"	32'-6 1/2"	2	5	6'-0 1/2"	32'-2 1/2"
129	2	5	5 1/2"	6'-1 1/4"	32'-8 3/4"	2	5	6'-1 1/4"	32'-6 1/4"
130	2	5	6 1/2"	6'-1 3/4"	33'-0 1/4"	2	5	6'-1 3/4"	32'-8 3/4"

NOTES:

1. Camber diagrams to build truss structures with 2 to 4 sections are shown. Cambers shown are for fabrication only and are measured with trusses fully supported at no-load conditions. Allowable camber tolerance for truss is 25% of specific camber value.
2. See Standard Drawing E 805-DMSS-04 for additional notes.

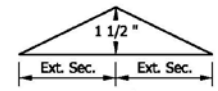

CAMBER DIAGRAM (2-Section Truss)

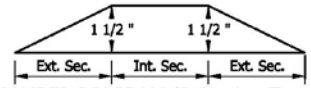

CAMBER DIAGRAM (3-Section Truss)

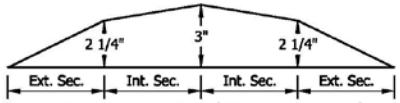

CAMBER DIAGRAM (4-Section Truss)

INDIANA DEPARTMENT OF TRANSPORTATION

DYNAMIC MESSAGE SIGN STRUCTURE
TABLE OF DIMENSIONS
SPANS 82' THRU 130' & CAMBER
SEPTEMBER 2013

STANDARD DRAWING NO. E 802-DMSS-05

SUPERVISOR, TRAFFIC DESIGN DATE

CHIEF ENGINEER DATE

REVISION TO STANDARD SPECIFICATIONS AND STANDARD DRAWINGS

PROPOSED NEW 802-DMSS-06 DYNAMIC MESSAGE SIGN STRUCTURE

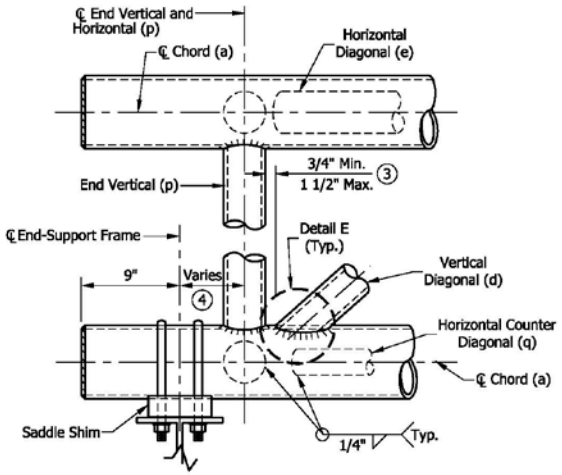

DETAIL A
EXTERIOR SECTION AT END-SUPPORT

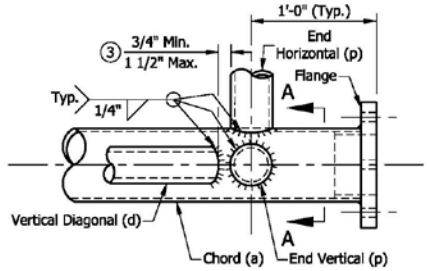

DETAIL C
CHORD AT FLANGE CONNECTION
PLAN VIEW

NOTES:

1. All bracing members shall be machined to provide a snug fit to the chord along the entire edge of bracing members before welding.
2. See Standard Drawing E 802-DMSS-03 for member locations and sizes.
3. Vertical and horizontal diagonals shall be detailed for minimum offset from the panel point based on the following: offset shall be such as to provide a 3/4" minimum to 1 1/2" maximum clearance between any diagonal and any horizontal or vertical member; and provide clearance for U-bolt connection for signs.
4. For variable end dimension, Standard Drawings E 802-DMSS-04 and -05.

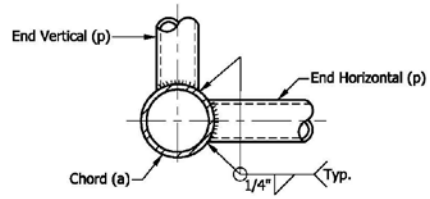

SECTION A-A
TYPICAL JOINT DETAILS

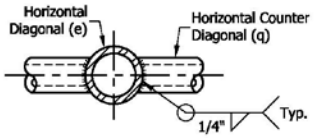

DETAIL D

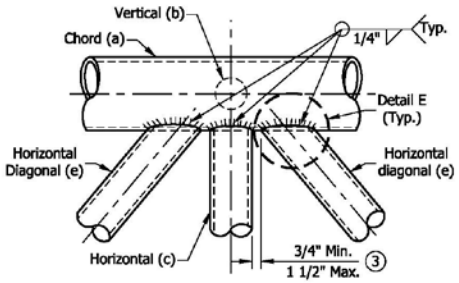

DETAIL B
TYPICAL PANEL CONNECTION
PLAN VIEW

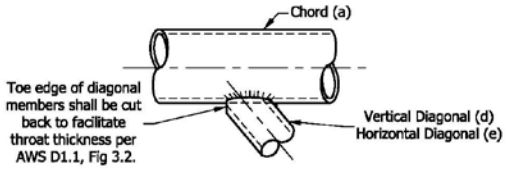

DETAIL E

INDIANA DEPARTMENT OF TRANSPORTATION

DYNAMIC MESSAGE SIGN STRUCTURE
CHORD CONNECTIONS AND WELD DETAILS

SEPTEMBER 2013

STANDARD DRAWING NO. E 802-DMSS-06

SUPERVISOR, TRAFFIC DESIGN DATE

CHIEF ENGINEER DATE

REVISION TO STANDARD SPECIFICATIONS AND STANDARD DRAWINGS

PROPOSED NEW 802-DMSS-07 DYNAMIC MESSAGE SIGN STRUCTURE

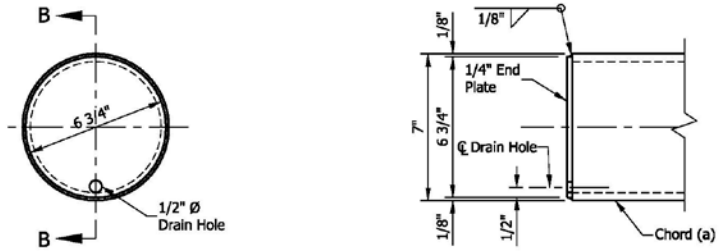

END VIEW

CHORD END PLATE DETAILS

SECTION B-B

NOTE:

1. See Standard Drawing E 802-DMSS-02 for chord flange locations.

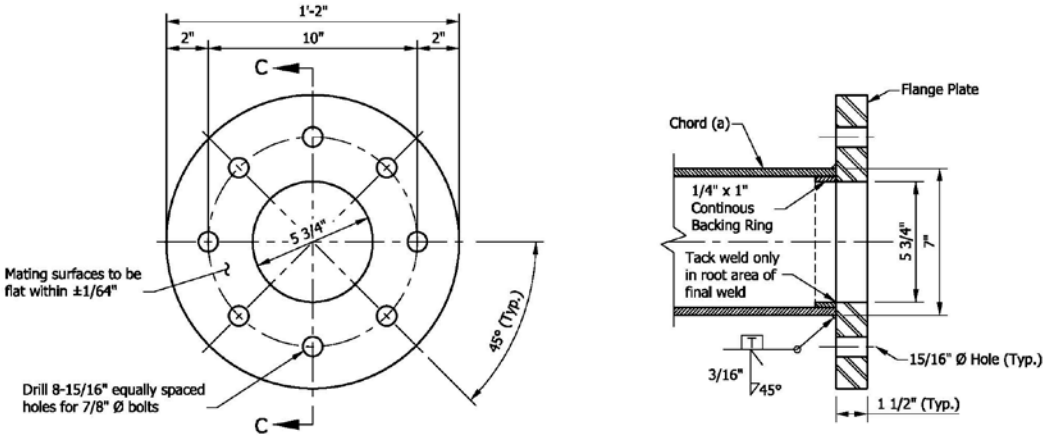

END VIEW

FLANGE PLATE DETAILS

SECTION C-C

INDIANA DEPARTMENT OF TRANSPORTATION

DYNAMIC MESSAGE SIGN STRUCTURE
FLANGE & CHORD END PLATE DETAILS

SEPTEMBER 2013

STANDARD DRAWING NO. E 802-DMSS-07

SUPERVISOR, TRAFFIC DESIGN DATE

CHIEF ENGINEER DATE

REVISION TO STANDARD SPECIFICATIONS AND STANDARD DRAWINGS

PROPOSED NEW 802-DMSS-08 DYNAMIC MESSAGE SIGN STRUCTURE

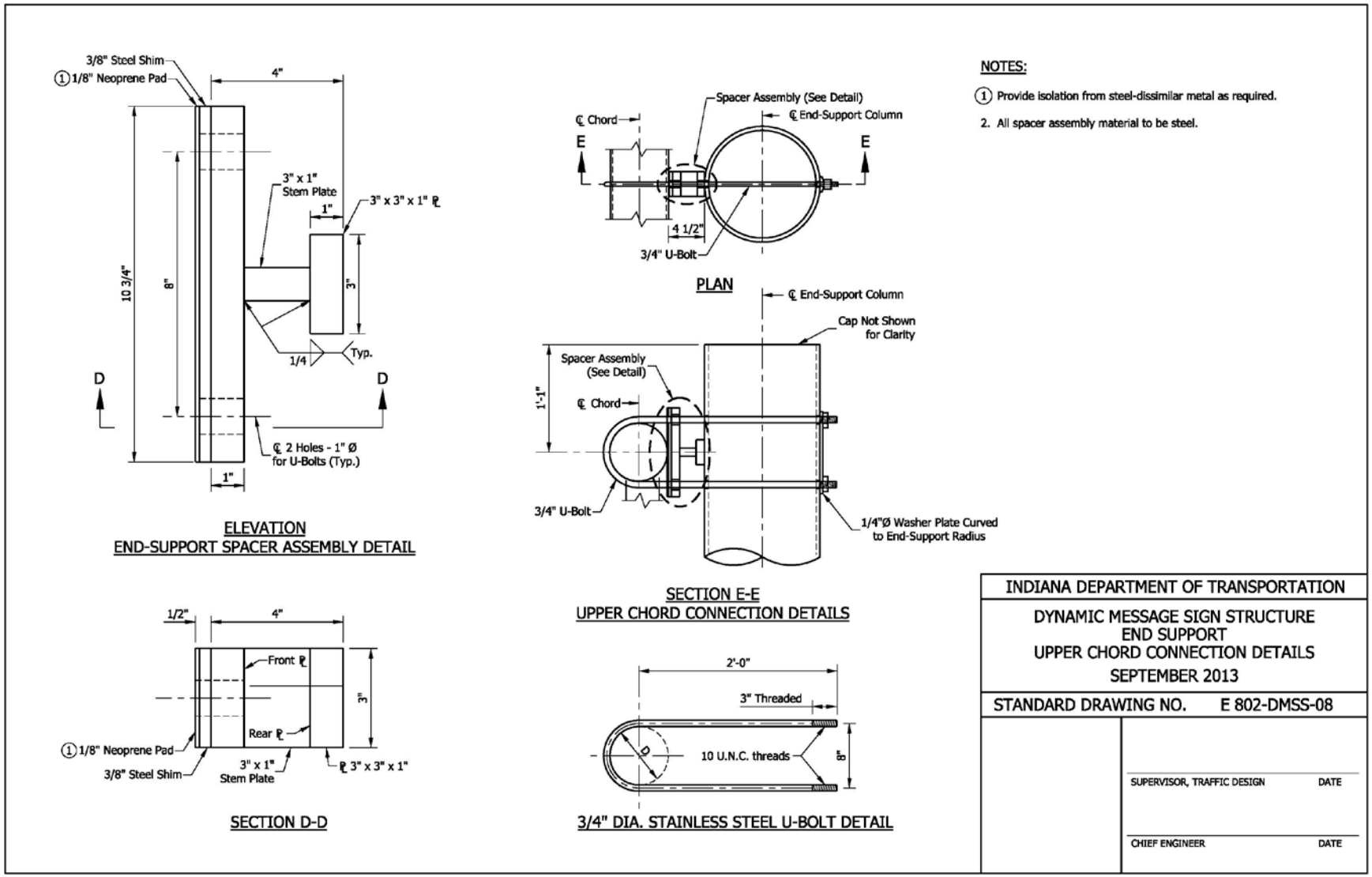

REVISION TO STANDARD SPECIFICATIONS AND STANDARD DRAWINGS

PROPOSED NEW 802-DMSS-09 DYNAMIC MESSAGE SIGN STRUCTURE

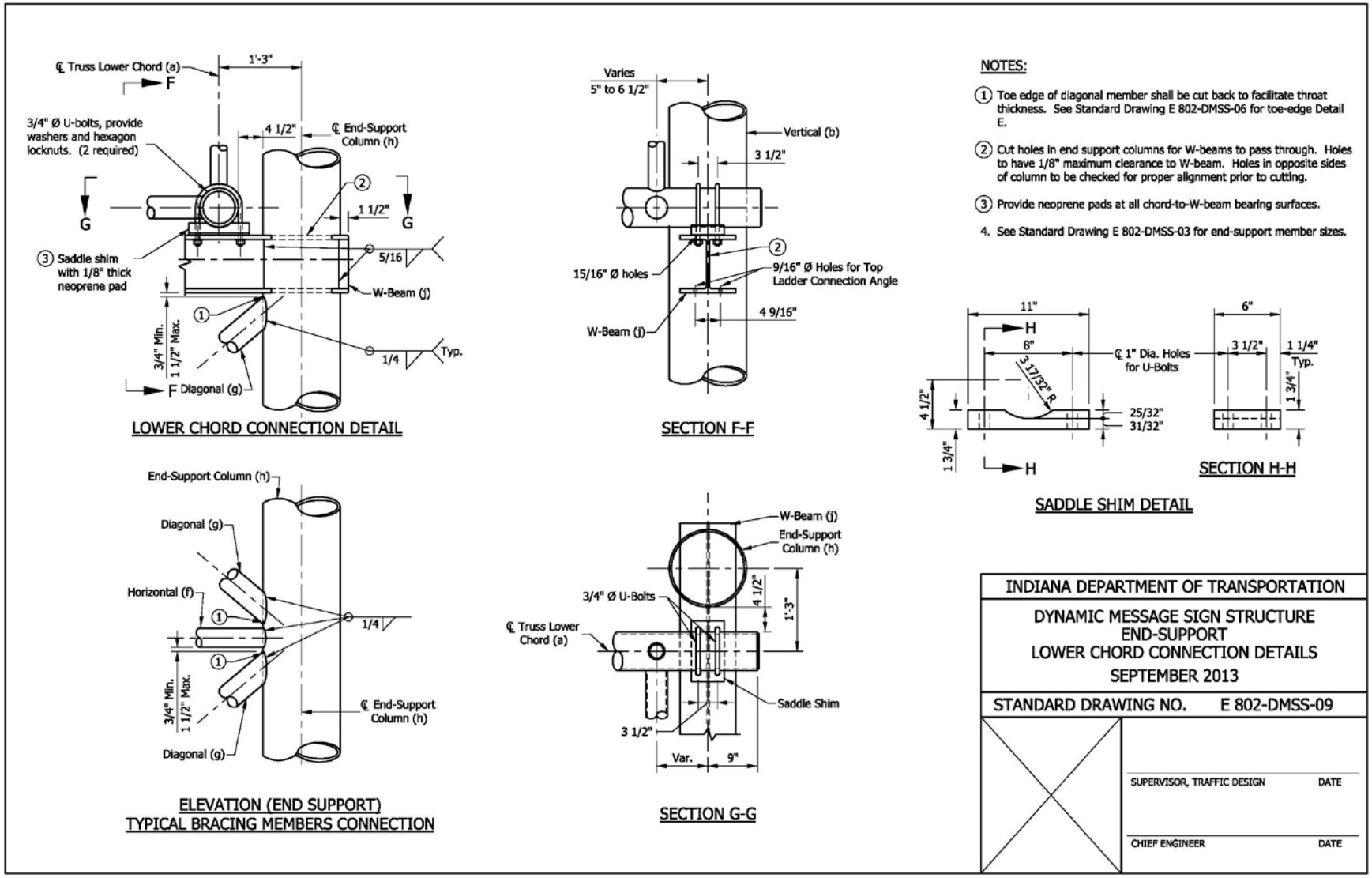

REVISION TO STANDARD SPECIFICATIONS AND STANDARD DRAWINGS

PROPOSED NEW 802-DMSS-10 DYNAMIC MESSAGE SIGN STRUCTURE (REVISED)

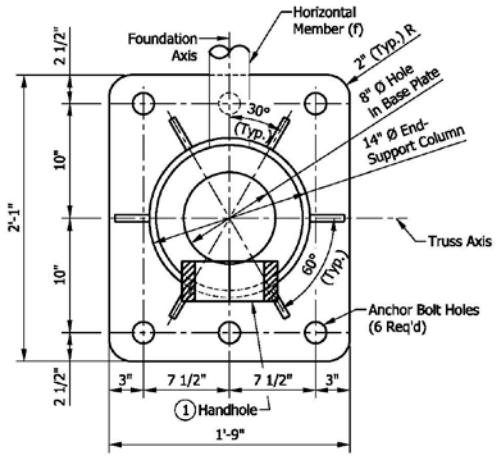

TYPE B-14 BASE PLATE

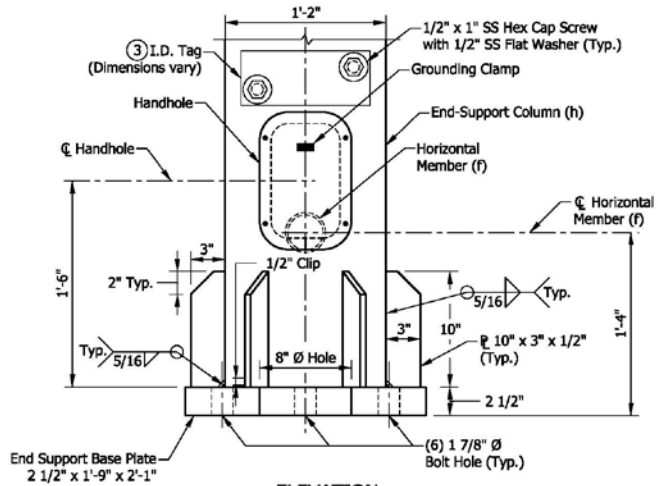

ELEVATION

NOTES:

1. See Standard Drawing E 802-DMSS-11 for handhole details.
2. See Standard Drawing E 802-DMSS-12 for anchor bolts and skirt details.
3. I.D. tag is a 1/8" stainless steel plate with the following information stamped in 1/2" black letters:

   Manufacturer _____, Drawing/Order #_____
   Contract #_____, Structure Type _____
   Fabrication Date _____, Structure Length _____
   End Support Mounting Height _____

4. Each end support requires one I.D. tag.

INDIANA DEPARTMENT OF TRANSPORTATION	
DYNAMIC MESSAGE SIGN STRUCTURE END SUPPORT BASE PLATE AND I.D. TAG DETAILS SEPTEMBER 2013	
STANDARD DRAWING NO. E 802-DMSS-10	
	SUPERVISOR, TRAFFIC DESIGN DATE CHIEF ENGINEER DATE

REVISION TO STANDARD SPECIFICATIONS AND STANDARD DRAWINGS

PROPOSED NEW 802-DMSS-11 DYNAMIC MESSAGE SIGN STRUCTURE

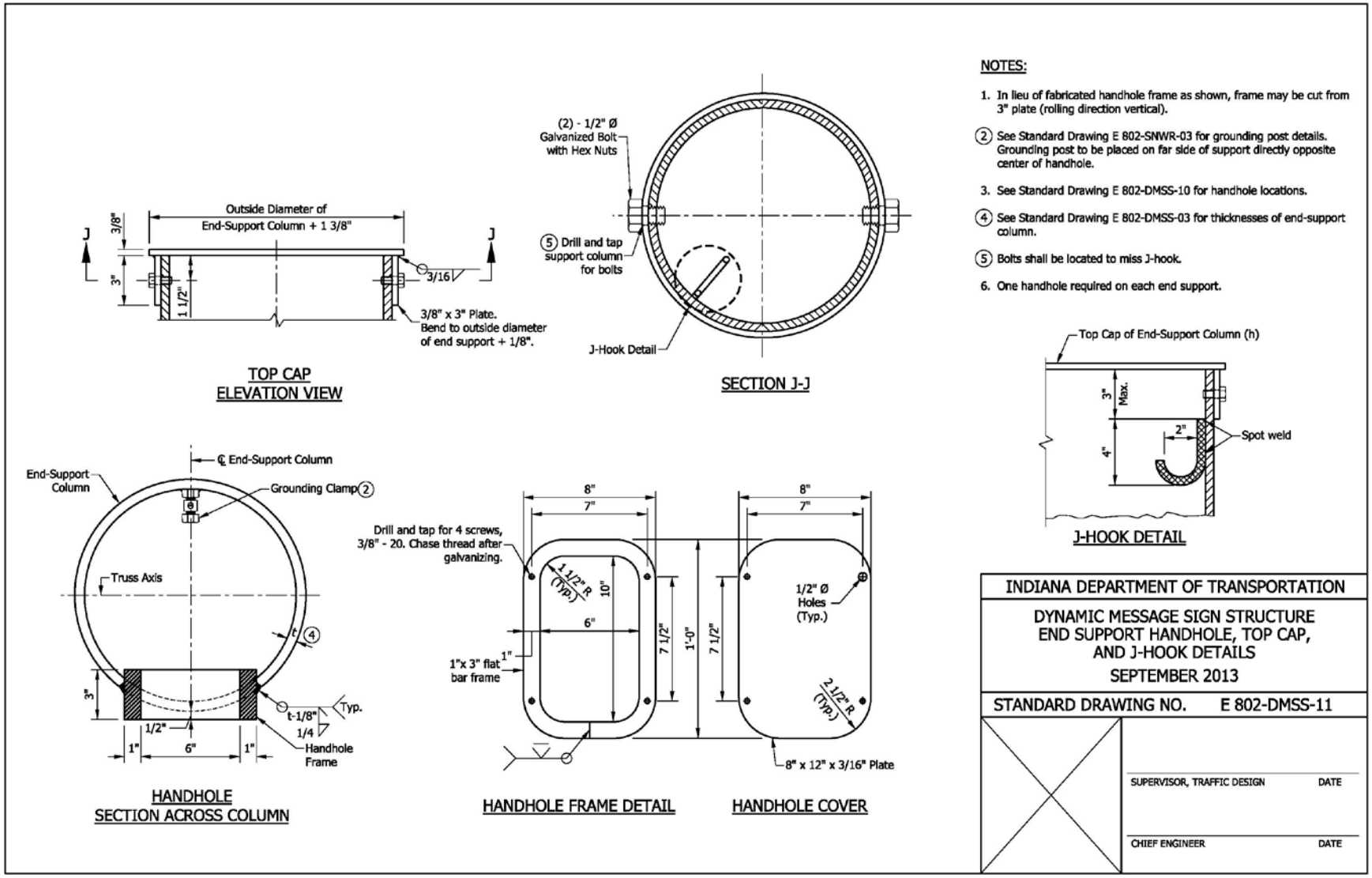

REVISION TO STANDARD SPECIFICATIONS AND STANDARD DRAWINGS

PROPOSED NEW 802-DMSS-12 DYNAMIC MESSAGE SIGN STRUCTURE

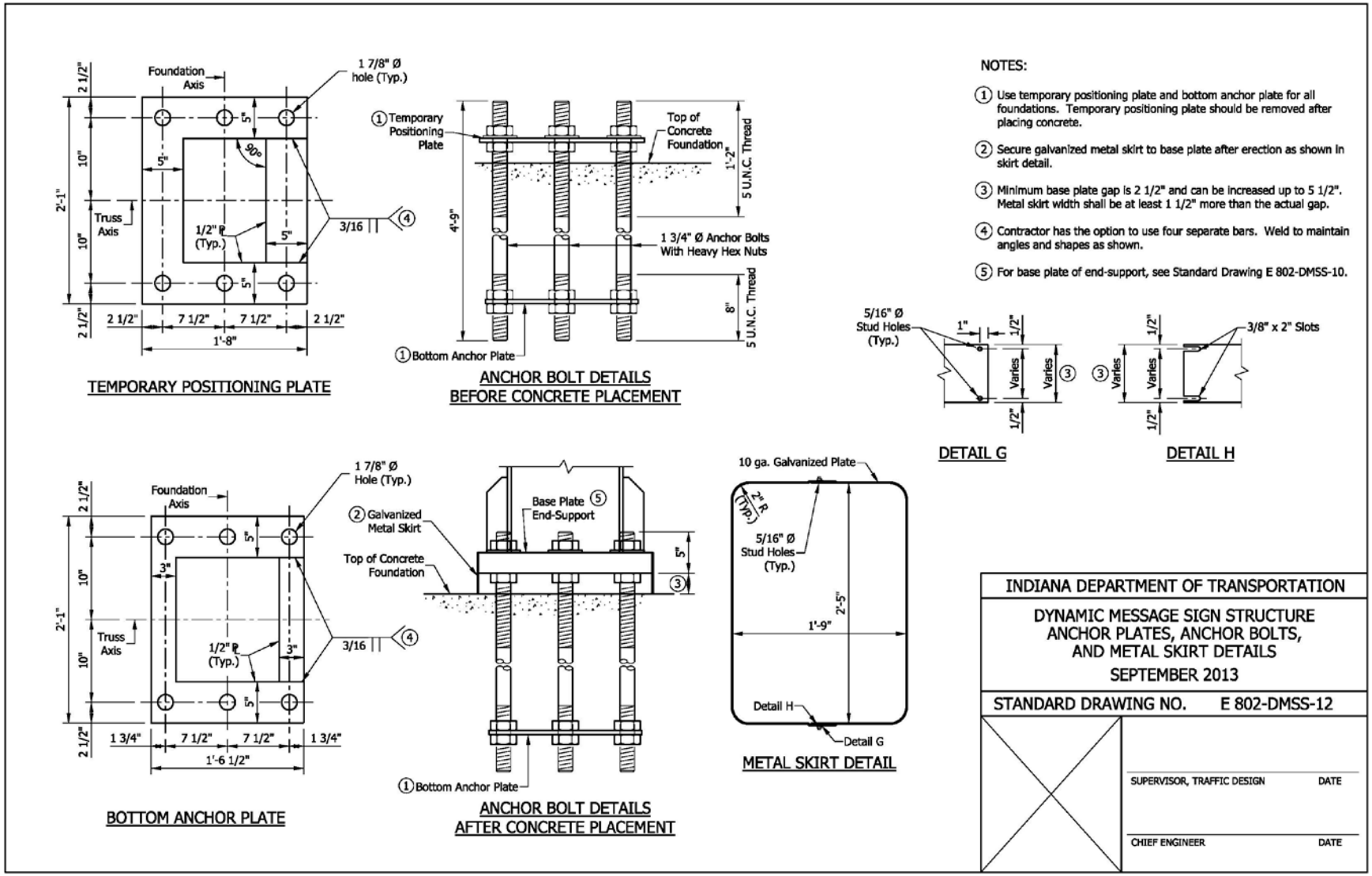

REVISION TO STANDARD SPECIFICATIONS AND STANDARD DRAWINGS

PROPOSED NEW 802-DMSS-13 DYNAMIC MESSAGE SIGN STRUCTURE

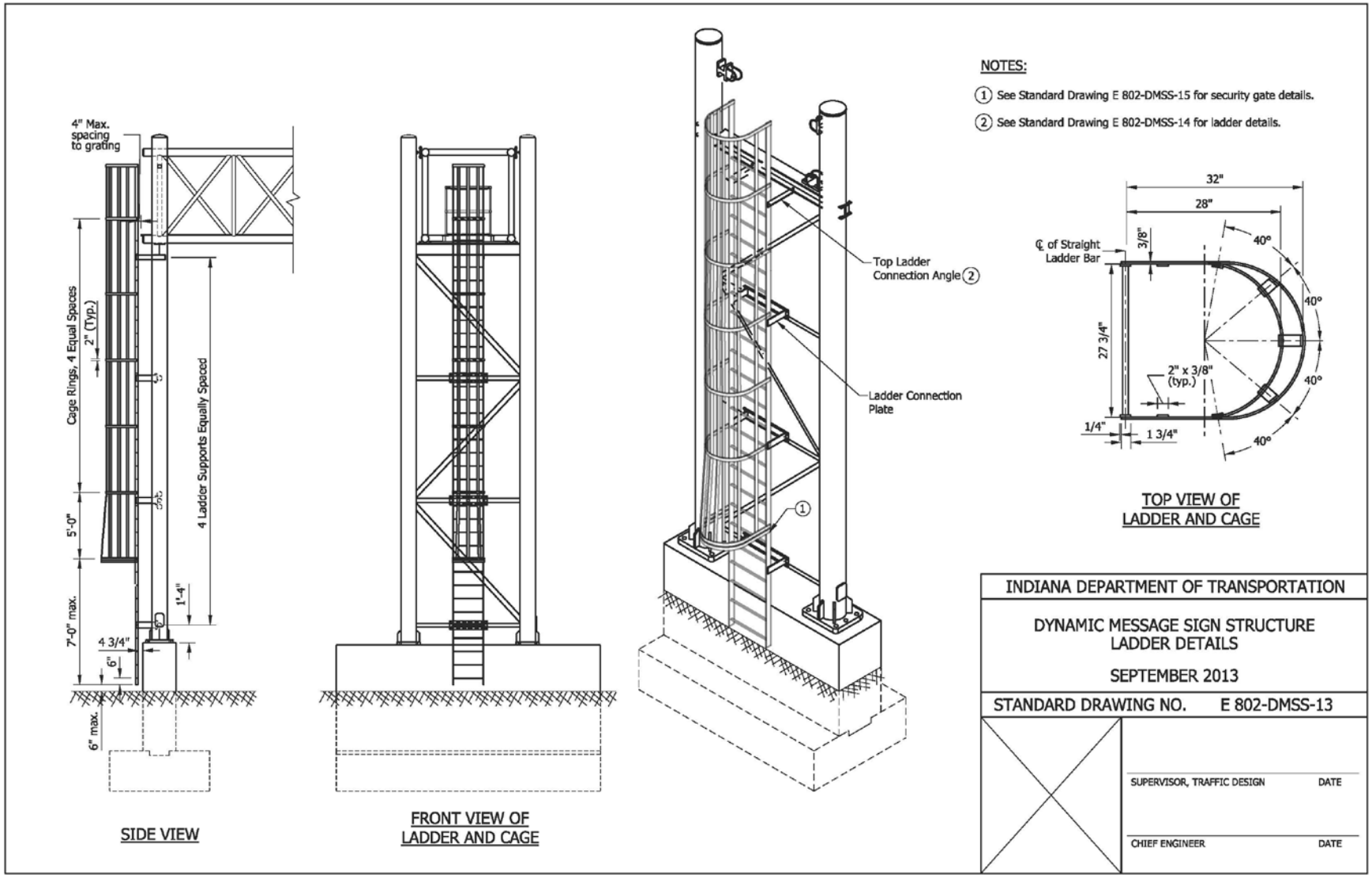

REVISION TO STANDARD SPECIFICATIONS AND STANDARD DRAWINGS

PROPOSED NEW 802-DMSS-14 DYNAMIC MESSAGE SIGN STRUCTURE

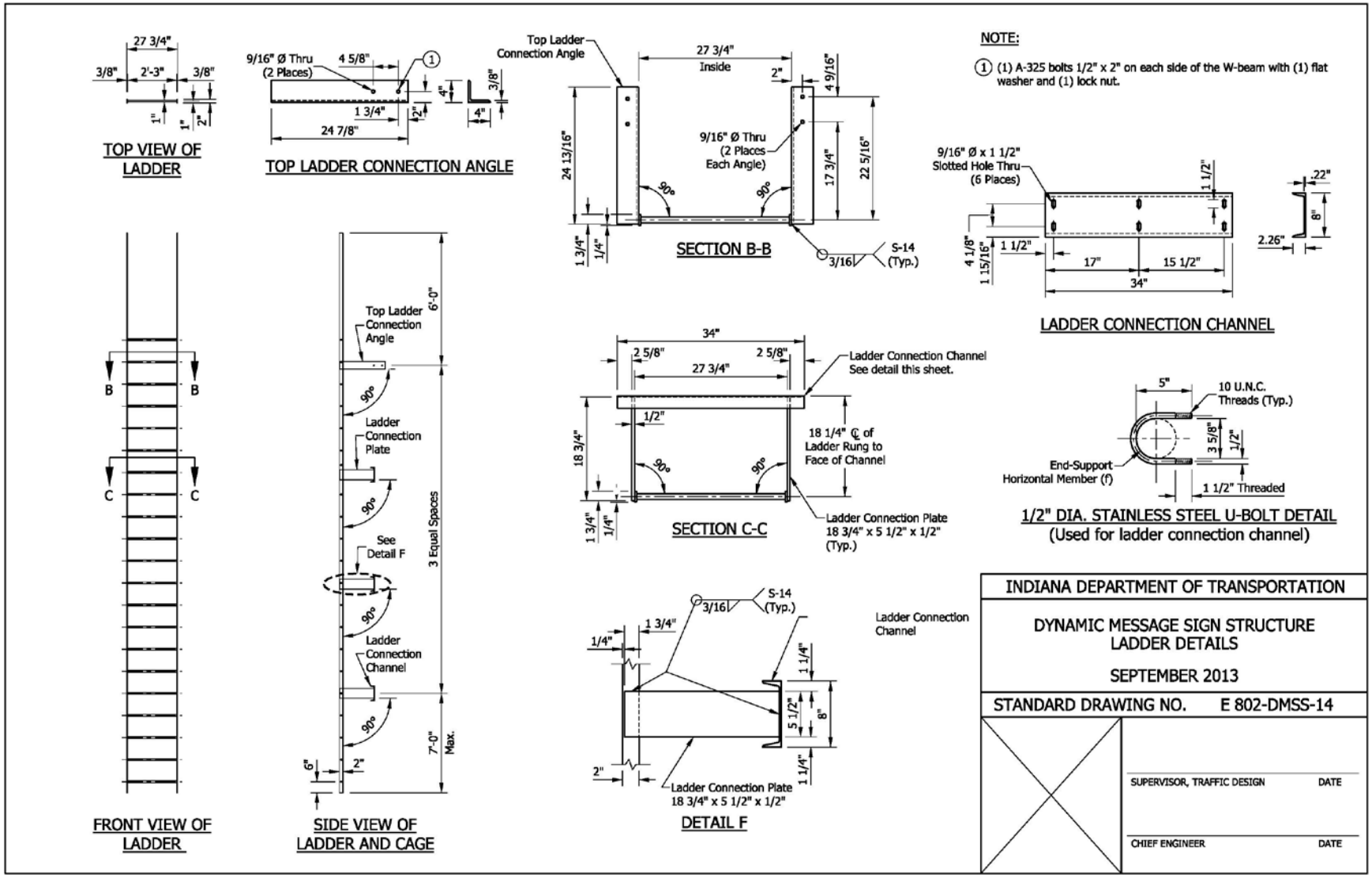

REVISION TO STANDARD SPECIFICATIONS AND STANDARD DRAWINGS

PROPOSED NEW 802-DMSS-15 DYNAMIC MESSAGE SIGN STRUCTURE

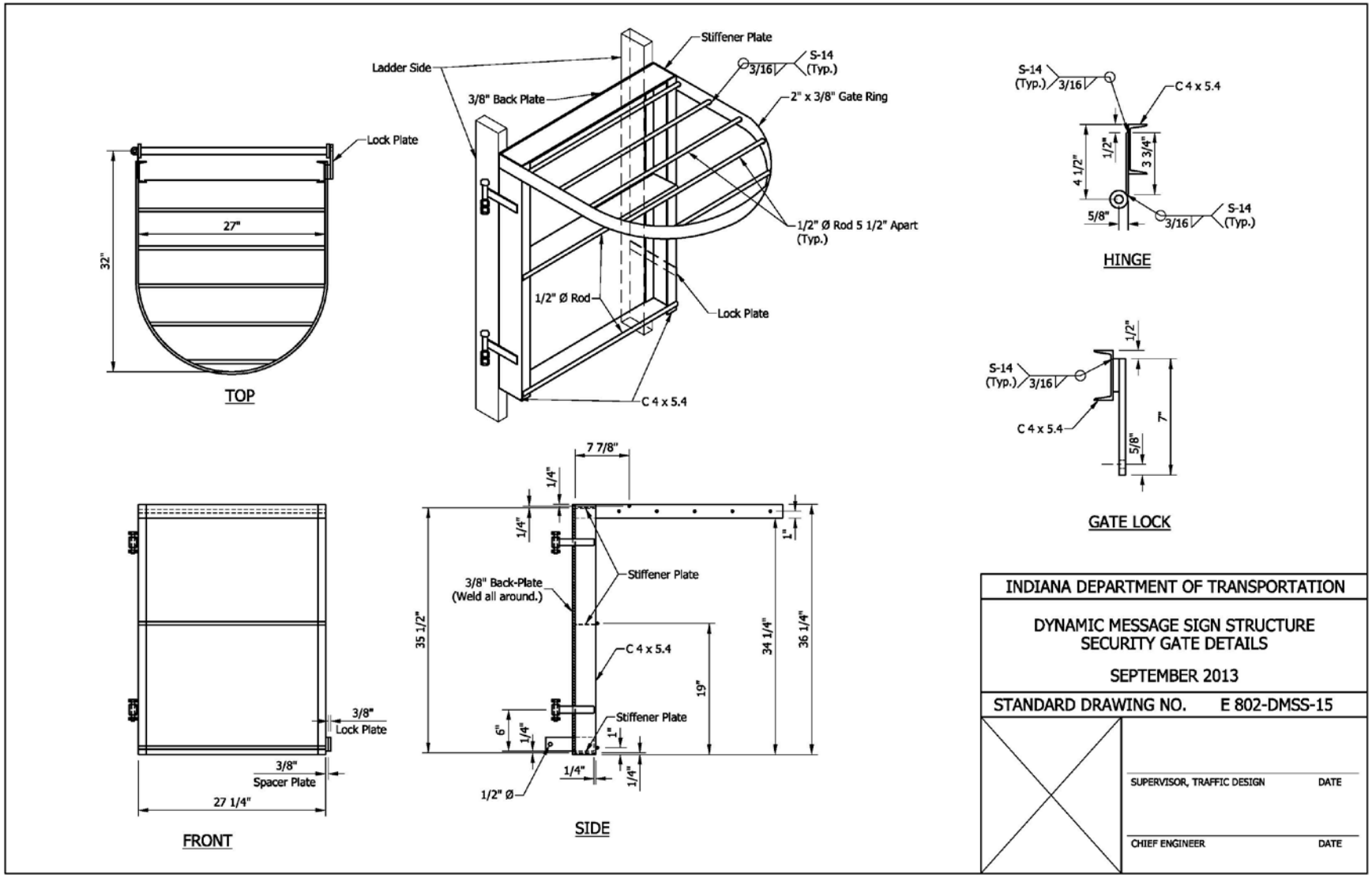

REVISION TO STANDARD SPECIFICATIONS AND STANDARD DRAWINGS

PROPOSED NEW 802-DMSS-16 DYNAMIC MESSAGE SIGN STRUCTURE

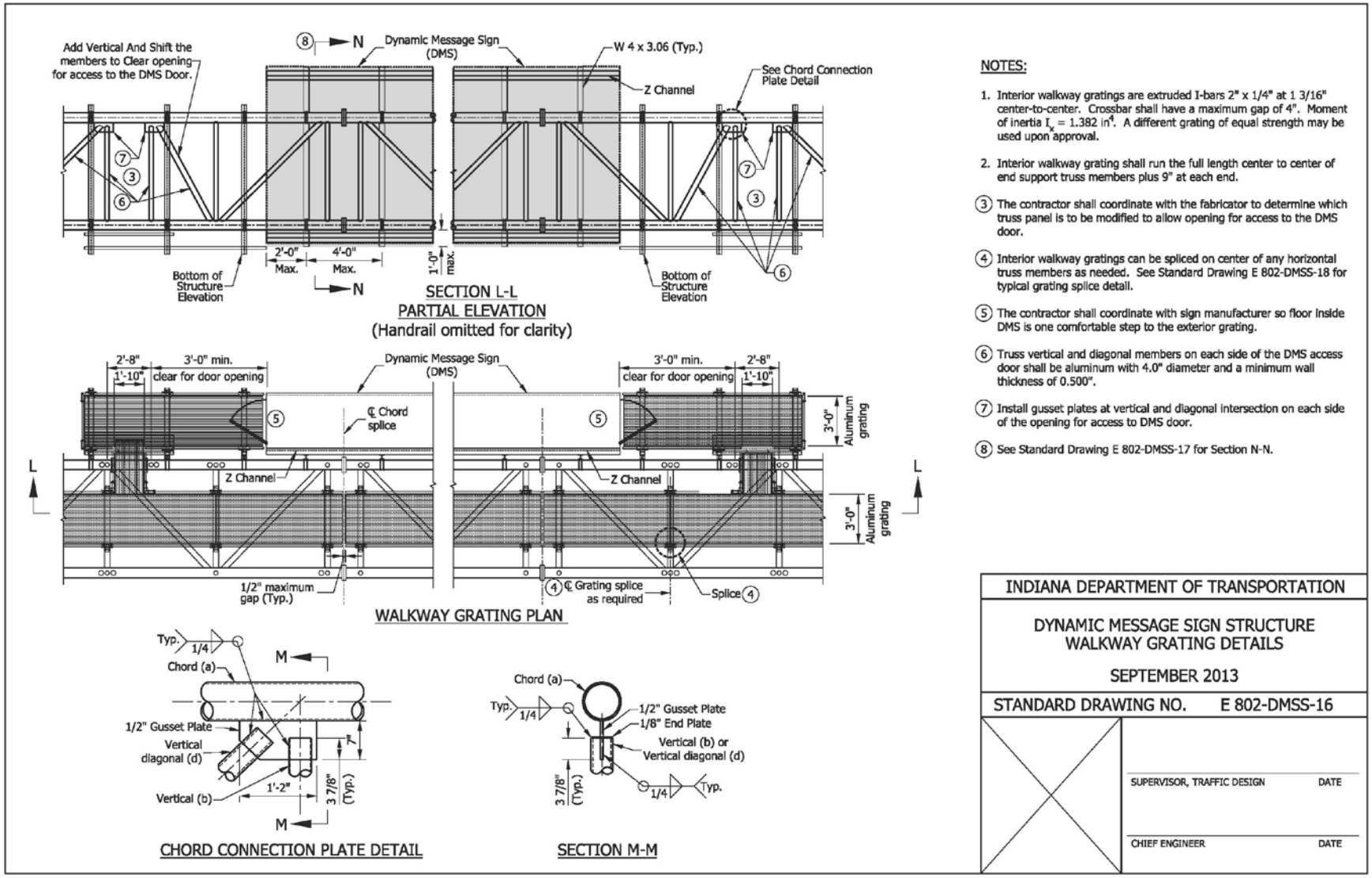

REVISION TO STANDARD SPECIFICATIONS AND STANDARD DRAWINGS

PROPOSED NEW 802-DMSS-17 DYNAMIC MESSAGE SIGN STRUCTURE

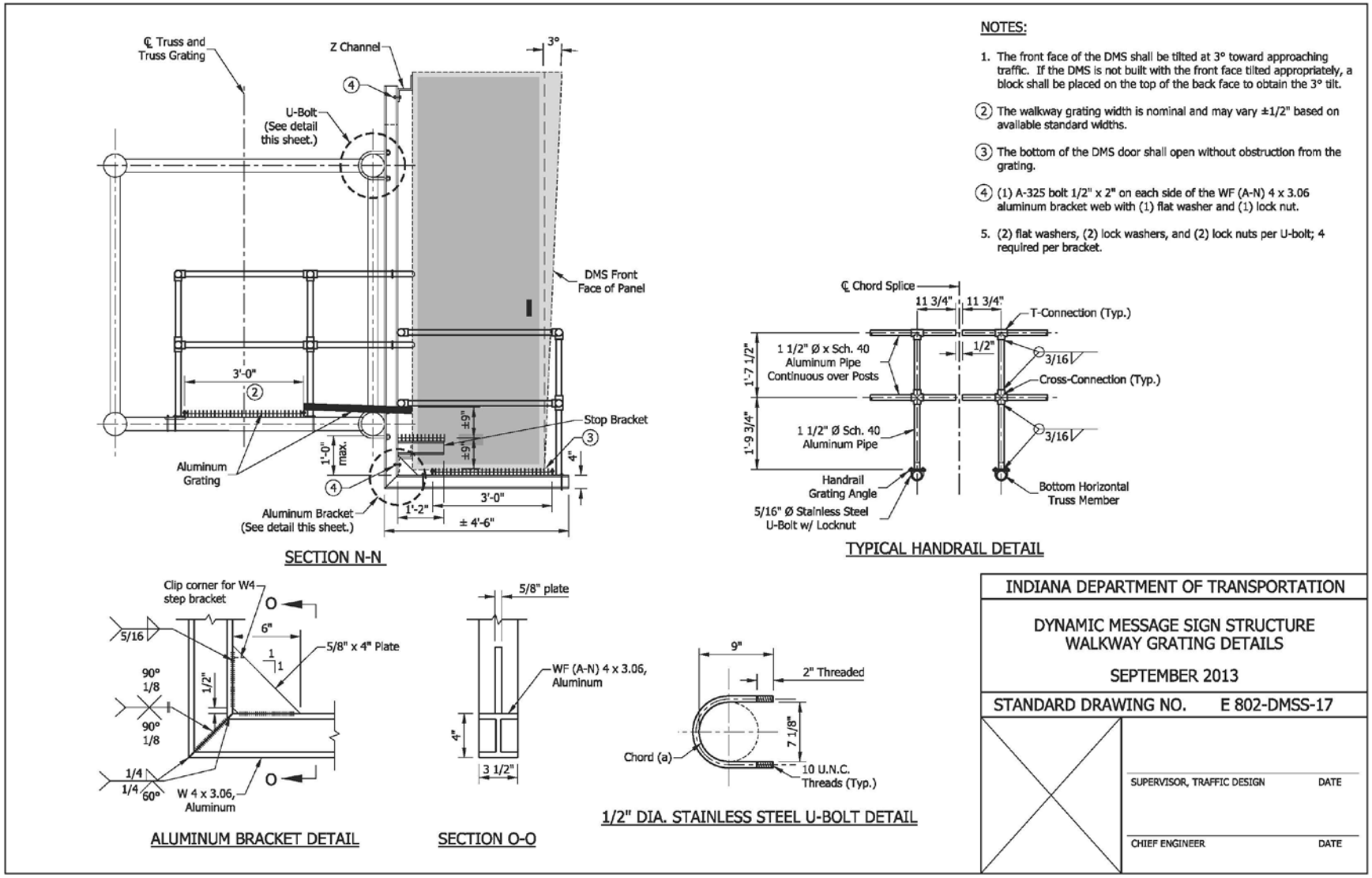

REVISION TO STANDARD SPECIFICATIONS AND STANDARD DRAWINGS

PROPOSED NEW 802-DMSS-18 DYNAMIC MESSAGE SIGN STRUCTURE

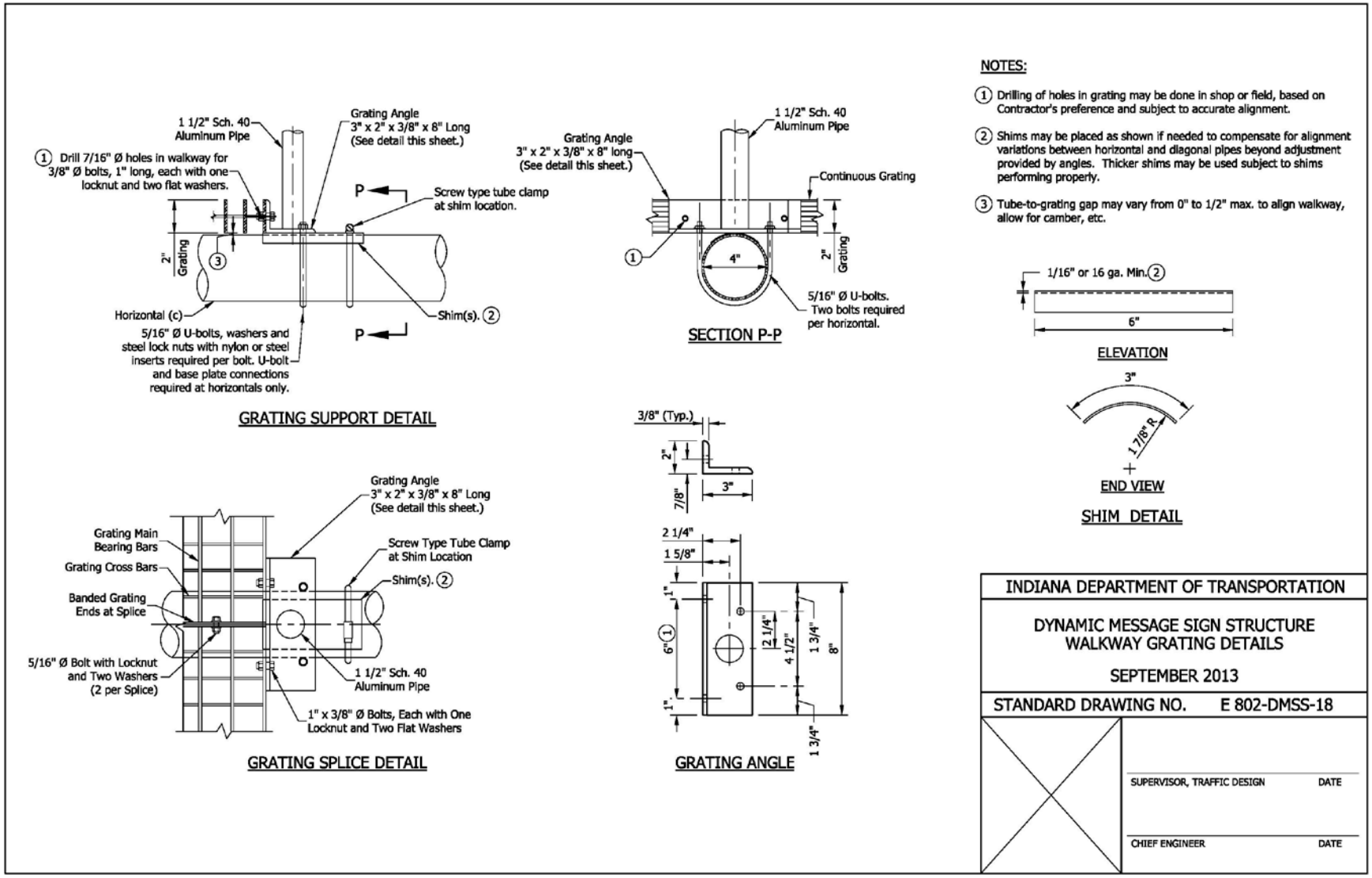

REVISION TO STANDARD SPECIFICATIONS AND STANDARD DRAWINGS

PROPOSED NEW 802-DMSS-19 DYNAMIC MESSAGE SIGN STRUCTURE

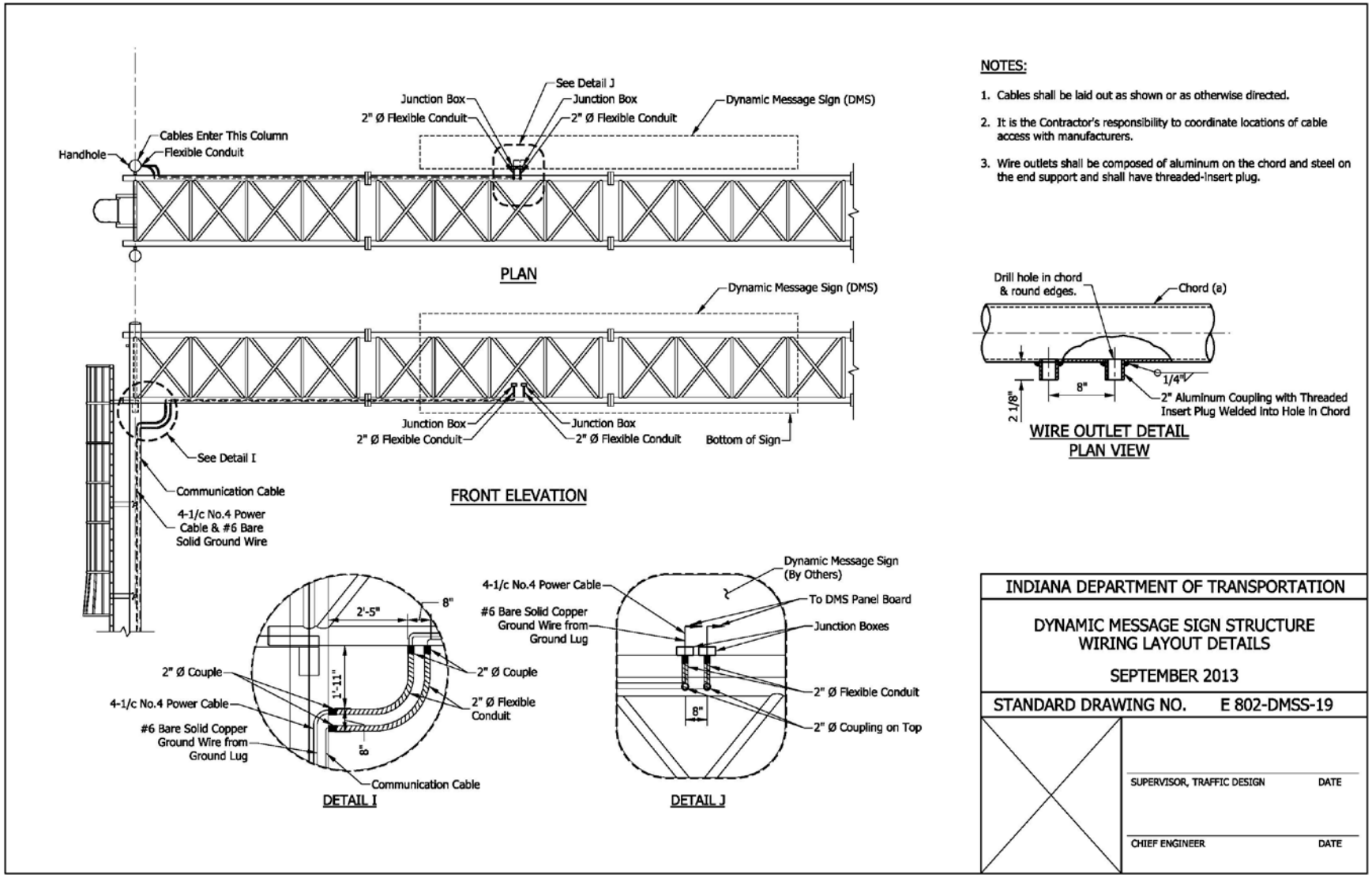

REVISION TO STANDARD SPECIFICATIONS AND STANDARD DRAWINGS

PROPOSED NEW 802-DMSS-20 DYNAMIC MESSAGE SIGN STRUCTURE

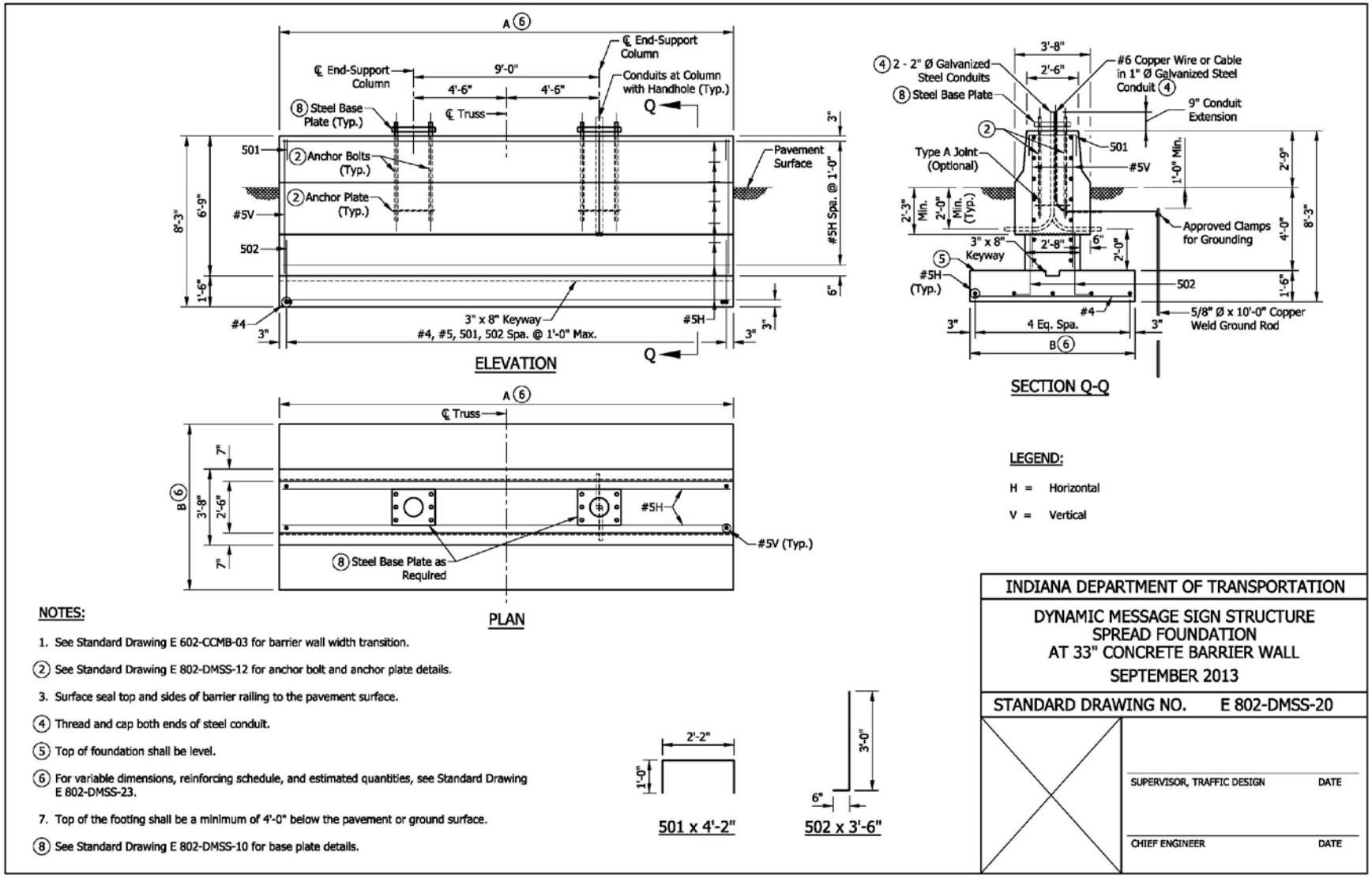

REVISION TO STANDARD SPECIFICATIONS AND STANDARD DRAWINGS

PROPOSED NEW 802-DMSS-21 DYNAMIC MESSAGE SIGN STRUCTURE

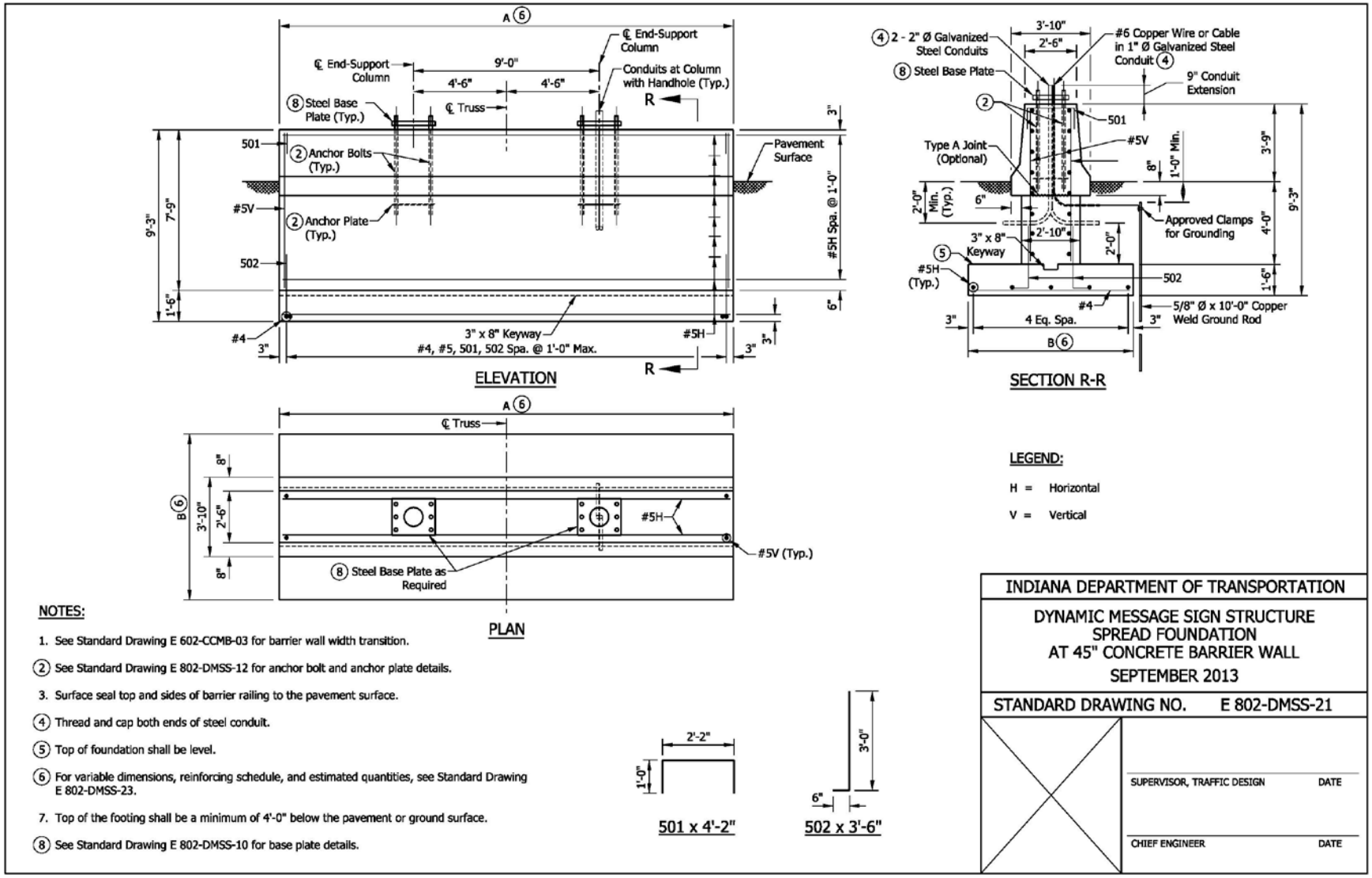

REVISION TO STANDARD SPECIFICATIONS AND STANDARD DRAWINGS

PROPOSED NEW 802-DMSS-22 DYNAMIC MESSAGE SIGN STRUCTURE (REVISED)

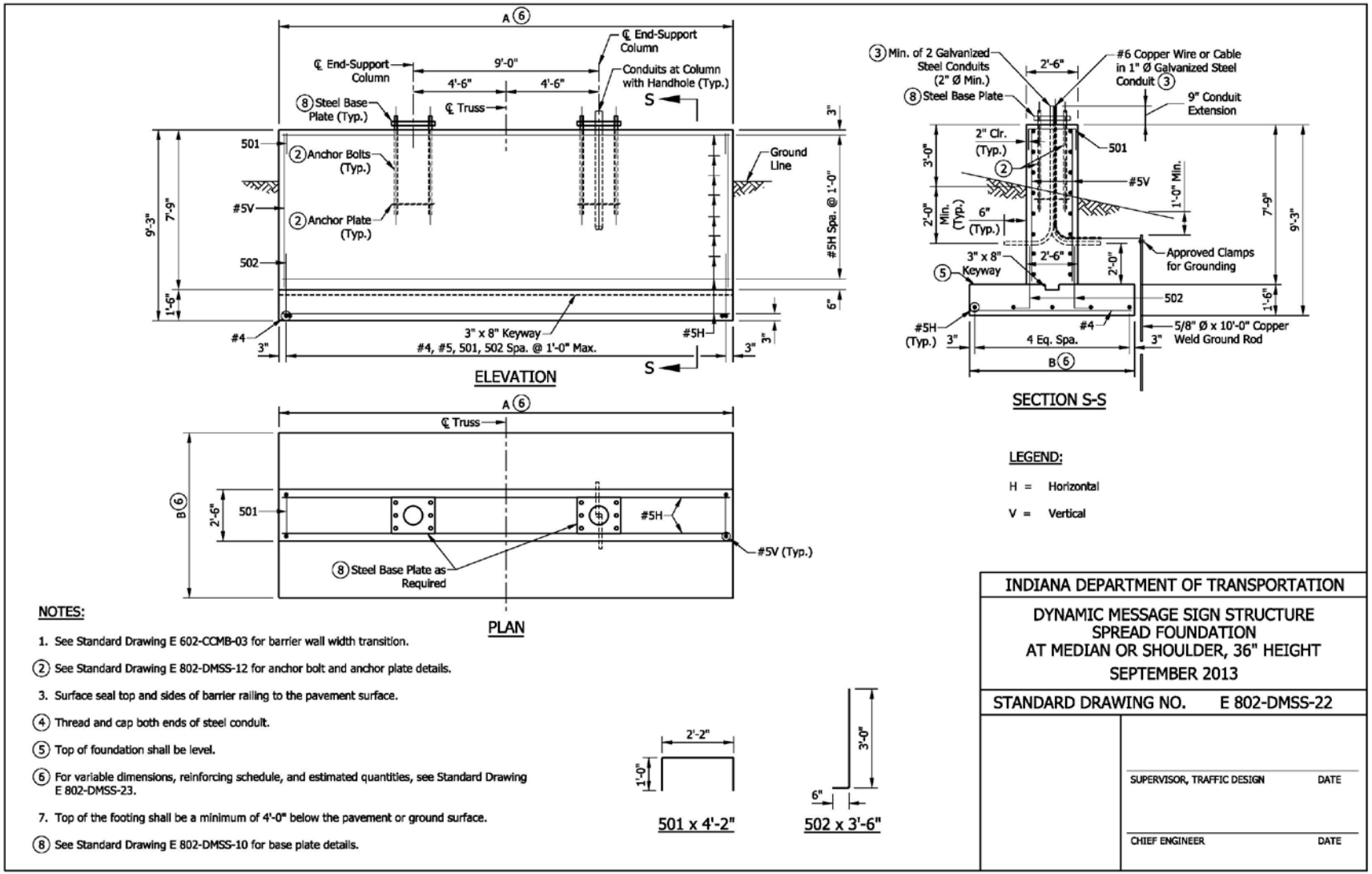

REVISION TO STANDARD SPECIFICATIONS AND STANDARD DRAWINGS

PROPOSED NEW 802-DMSS-23 DYNAMIC MESSAGE SIGN STRUCTURE

TABLE 1: SPREAD FOUNDATIONS FOR DYNAMIC MESSAGE OVERHEAD SIGN STRUCTURE

MAX. SIGN AREA (SFT)	ALLOWABLE GROSS SOIL BEARING PRESSURE (PSF)	FOOTING DIMENSION		TYPE OF BARRIER
		LENGTH (FT)	"B" WIDTH (FT)	
300	1500 - 2499	26'	7'	33", 45" or 36" Median/Shoulder
	2500 - 3499	22'	5'	33", 45" or 36" Median/Shoulder
	> 3499	20'	4'	33", 45" or 36" Median/Shoulder

TABLE 2: SPREAD FOUNDATIONS DIMENSIONS AND BILL OF MATERIALS

FOOTING DIMENSION		TYPE OF BARRIER	#4		#5H		#5V		501		502		TOTAL EPOXY COATED REINFORCING BARS (LBS)	CONCRETE CLASS A (CYS)	SURFACE SEAL (SYS)
A (FT)	B (FT)		NO. BARS	LENGTH	NO. BARS	LENGTH	NO. BARS	LENGTH	NO. BARS	LENGTH	NO. BARS	LENGTH			
26'	7'	33" Concrete Barrier	27	6'-8"	19	25'-8"	54	6'-6"	27	4'-2"	54	3'-6"	1309	27.9	23.9
		45" Concrete Barrier	27	6'-8"	21	25'-8"	54	7'-6"	27	4'-2"	54	3'-6"	1418	30.9	29.7
		36" Median or Shoulder Barrier	27	6'-8"	21	25'-8"	54	7'-6"	27	4'-2"	54	3'-6"	1418	28.8	24.6
22'	5'	33" Concrete Barrier	23	4'-8"	19	21'-8"	46	6'-6"	23	4'-2"	46	3'-6"	1081	21.2	20.2
		45" Concrete Barrier	23	4'-8"	21	21'-8"	46	7'-6"	23	4'-2"	46	3'-6"	1175	23.7	25.1
		36" Median or Shoulder Barrier	23	4'-8"	21	21'-8"	46	7'-6"	23	4'-2"	46	3'-6"	1175	21.9	20.8
20'	5'	33" Concrete Barrier	21	4'-8"	19	19'-8"	42	6'-6"	21	4'-2"	42	3'-6"	984	19.3	18.4
		45" Concrete Barrier	21	4'-8"	21	19'-8"	42	7'-6"	21	4'-2"	42	3'-6"	1069	21.6	22.9
		36" Median or Shoulder Barrier	21	4'-8"	21	19'-8"	42	7'-6"	21	4'-2"	42	3'-6"	1069	19.9	18.9

NOTES:

1. Geotechnical recommendations for Allowable Gross Soil Bearing Pressure shall be obtained to determine footing size and reinforcement shown in Tables 1 and 2.
2. If Allowable Gross Soil Bearing Pressure is less than 1500 psf, a drilled shaft or other special foundation shall be used.
3. See Standard Drawings E 802-DMSS-20 through -22 for locations of dimensions and reinforcing bars.

INDIANA DEPARTMENT OF TRANSPORTATION

DYNAMIC MESSAGE SIGN STRUCTURE
SPREAD FOUNDATIONS QUANTITIES

SEPTEMBER 2013

STANDARD DRAWING NO. E 802-DMSS-23

SUPERVISOR, TRAFFIC DESIGN DATE

CHIEF ENGINEER DATE

REVISION TO STANDARD SPECIFICATIONS AND STANDARD DRAWINGS

PROPOSED NEW 802-SBTS-01 SIGN BOX TRUSS STRUCTURE

INDEX

SHEET NO.	SUBJECT
1	Index
2	Plan & Elevation
3	Truss Sections, Table with Member Sizes
4	Table of Dimensions, Spans 34' thru 81'
5	Table of Dimensions, Spans 82' thru 130' and Camber
6	Chord Connections and Weld Details
7	Flange, Chord End Plate, and Wire Outlet Details
8	Upper Chord Connection Details
9	Lower Chord Connection Details
10	End Support Lower Chord Connections, Alternate HSS Beam Details
11	End Support Base Plate and I.D. Tag Details
12	End Support Top Cap, Handhole, and J-Hook Details
13	End Support Anchor Bolt and Metal Skirt Details
14	Interior Walkway Grating Details
15	Interior Walkway Grating Details
16	Lighting Walkway
17	Lighting Walkway
18	Lighting Walkway Profile
19	Lighting Walkway and Handrail Assembly
20	Lighting Walkway, Handrail Hinge, and Grating Details
21	Lighting Walkway Fixture Mount Details
22	Spread Foundation at 33" Concrete Barrier Wall
23	Spread Foundation at 45" Concrete Barrier Wall
24	Spread Foundation for Median or Shoulder, 36" Height
25	Spread Foundations Quantities
26	Alternate Drilled Shaft Foundation at 33" Concrete Barrier Wall
27	Alternate Drilled Shaft Foundation at 45" Concrete Barrier Wall
28	Alternate Drilled Shaft Foundation for Median or Shoulder, 36" Height
29	Alternate Drilled Shaft Foundations Quantities

INDIANA DEPARTMENT OF TRANSPORTATION

SIGN BOX TRUSS STRUCTURE
DRAWING INDEX

SEPTEMBER 2013

STANDARD DRAWING NO. E 802-SBTS-01

SUPERVISOR, TRAFFIC DESIGN DATE

CHIEF ENGINEER DATE

REVISION TO STANDARD SPECIFICATIONS AND STANDARD DRAWINGS

PROPOSED NEW 802-SBTS-02 SIGN BOX TRUSS STRUCTURE

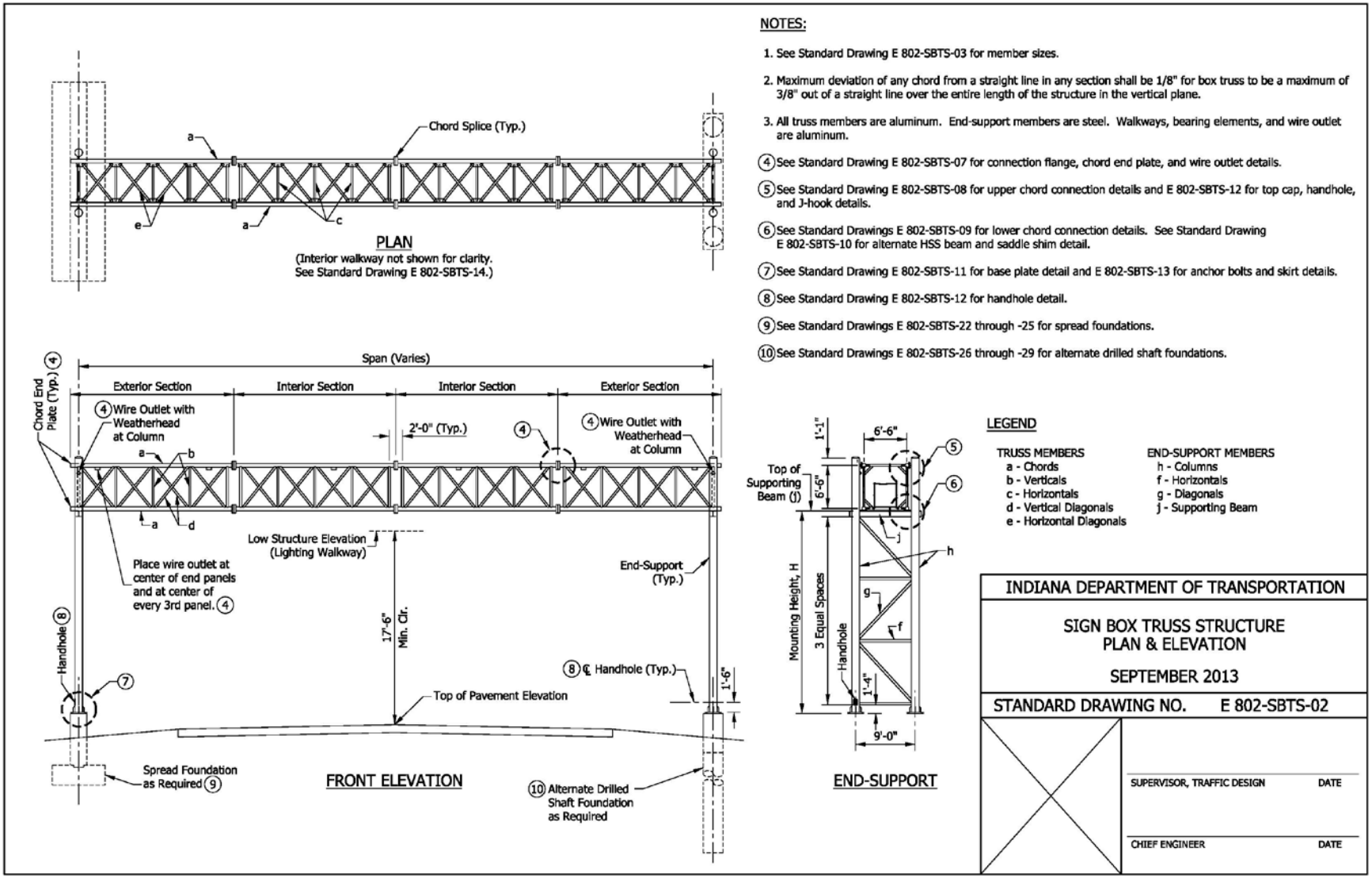

REVISION TO STANDARD SPECIFICATIONS AND STANDARD DRAWINGS

PROPOSED NEW 802-SBTS-03 SIGN BOX TRUSS STRUCTURE

NOTES:

1. Number of panels and sections varies. See table on Standard Drawing E 802-SBTS-04 and -05 for recommended dimensions.
2. See Standard Drawing E 802-SBTS-06 for welded connections and Details A through F.
3. See Standard Drawing E 802-SBTS-02 for Legend.
4. Truss members to be aluminum. End-support members to be steel. Steel pipe diameters shown in table are nominal pipe size.
5. A corner brace is required on each of the eight external corners of exterior and interior sections. See Standard Drawing E 802-SBTS-06 for corner brace Detail E.

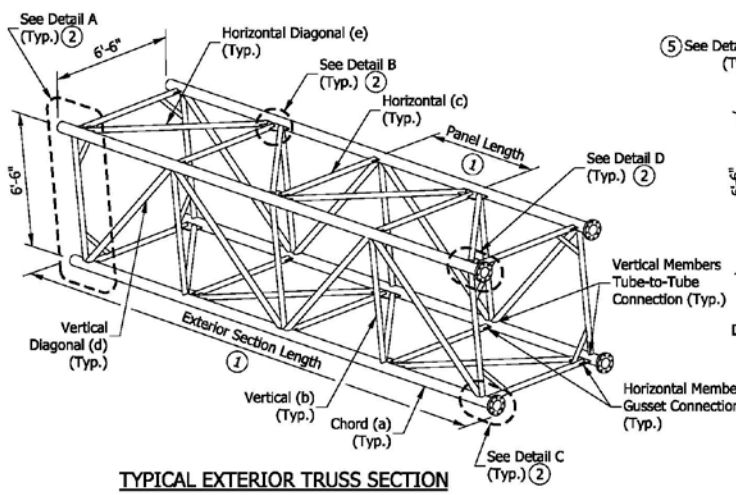

TYPICAL EXTERIOR TRUSS SECTION

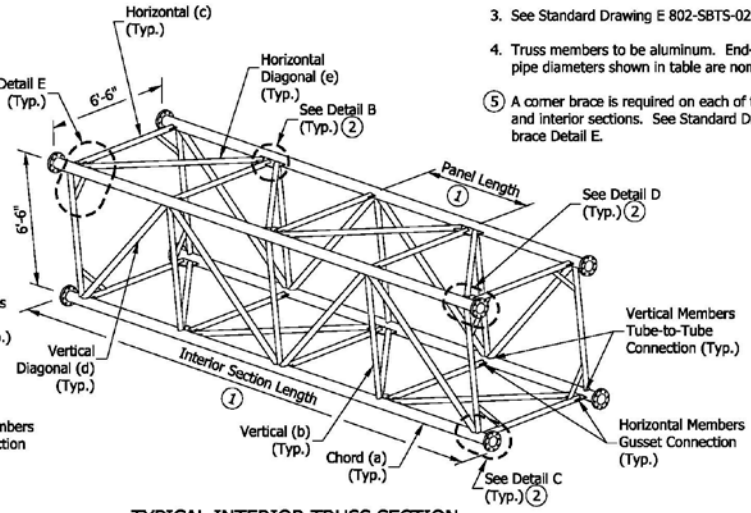

TYPICAL INTERIOR TRUSS SECTION

TRUSS TYPE	MAX. SIGN AREA	MAX. SPAN	MAX. MOUNTING HEIGHT	TRUSS MEMBERS, ALUMINUM										END-SUPPORT MEMBERS, STEEL						
				CHORD		VERTICAL		HORIZONTAL		VERTICAL DIAGONAL		HORIZONTAL DIAGONAL		HORIZONTAL		DIAGONAL		COLUMN		SUPPORTING BEAM
			H	a		b		c		d		e		f		g		h		j
				DIA.	THK	DIA.	THK	DIA.	THK	DIA.	THK	DIA.	THK	DIA.	THK	DIA.	THK	DIA.	THK	
	SQ. FT.	FT.	FT.	IN.	IN.	IN.	IN.	IN.	IN.	IN.	IN.	IN.	IN.	IN.	IN.	IN.	IN.	IN.	IN.	
A	500	130	28'-6"	6.00	0.250	2.50	0.250	4.00	0.188	3.00	0.375	4.00	0.375	5.00	0.375	5.00	0.375	14.00	0.500	W 8 x 58 or HSS 8" x 8" x 1/2"
B	700	100	28'-6"	6.50	0.375	3.00	0.375	4.00	0.188	3.00	0.500	4.00	0.375	5.00	0.375	7.00	0.375	14.00	0.500	
C		130	28'-6"	7.00	0.375	3.00	0.375	4.00	0.188	3.00	0.500	4.00	0.500	5.00	0.375	8.00	0.500	14.00	0.593	
D	900	100	28'-6"	7.00	0.375	3.00	0.375	4.00	0.188	3.00	0.500	4.00	0.500	5.00	0.375	8.00	0.500	18.00	0.500	
E		130	28'-6"	7.00	0.500	3.00	0.375	4.00	0.250	3.00	0.500	4.00	0.500	5.00	0.375	8.00	0.593	18.00	0.562	W 10 x 68 or HSS 10" x 10" x 1/2"

INDIANA DEPARTMENT OF TRANSPORTATION

SIGN BOX TRUSS STRUCTURE
TRUSS SECTIONS IN ISOMETRIC VIEWS,
TABLE WITH MEMBER SIZES

SEPTEMBER 2013

STANDARD DRAWING NO. E 802-SBTS-03

SUPERVISOR, TRAFFIC DESIGN DATE

CHIEF ENGINEER DATE

REVISION TO STANDARD SPECIFICATIONS AND STANDARD DRAWINGS

PROPOSED NEW 802-SBTS-04 SIGN BOX TRUSS STRUCTURE

DIMENSIONS FOR SIGN BOX TRUSSES (34' THRU 81')

SPAN	EXTERIOR SECTIONS					INTERIOR SECTIONS			
SPAN-TRUSS LENGTH, (FT)	NO. OF EXT. SECTIONS	NO. OF PANELS PER SECTION	VARIABLE END DIMEN.	PANEL LENGTH	SECTION LENGTH	NO. OF INT. SECTIONS	NO. OF PANELS PER SECTION	PANEL LENGTH	SECTION LENGTH
34	1	6	6"	5'-6"	35'-6"	0			
35	1	6	6"	5'-8"	36'-6"	0			
36	2	3	6"	5'-6"	18'-9"	0			
37	2	3	6"	5'-8"	19'-3"	0			
38	2	3	6"	5'-10"	19'-9"	0			
39	2	3	6"	6'-0"	20'-3"	0			
40	2	3	6"	6'-2"	20'-9"	0			
41	2	3	6"	6'-4"	21'-3"	0			
42	2	3	6"	6'-6"	21'-9"	0			
43	2	4	6"	5'-0"	22'-3"	0			
44	2	4	6"	5'-1 1/2"	22'-9"	0			
45	2	4	6"	5'-3"	23'-3"	0			
46	2	4	6"	5'-4 1/2"	23'-9"	0			
47	2	4	6"	5'-6"	24'-3"	0			
48	2	4	6"	5'-7 1/2"	24'-9"	0			
49	2	4	6"	5'-9"	25'-3"	0			
50	2	4	6"	5'-10 1/2"	25'-9"	0			
51	2	4	6"	6'-0"	26'-3"	0			
52	2	4	6"	6'-1 1/2"	26'-9"	0			
53	2	4	6"	6'-3"	27'-3"	0			
54	2	4	6"	6'-4 1/2"	27'-9"	0			
55	2	4	6"	6'-6"	28'-3"	0			
56	2	5	5 1/4"	5'-3 3/4"	28'-9"	0			
57	2	5	6 1/4"	5'-4 3/4"	29'-3"	0			
58	2	5	6"	5'-6"	29'-9"	0			
59	2	5	5 3/4"	5'-7 1/4"	30'-3"	0			
60	2	5	5 1/2"	5'- 8 1/2"	30'-9"	0			
61	2	5	6 1/2"	5'-9 1/2"	31'-3"	0			
62	2	5	6 1/4"	5'-10 3/4"	31'-9"	0			
63	2	5	6"	6'-0"	32'-3"	0			
64	2	5	5 3/4"	6'-1 1/4"	32'-9"	0			
65	2	5	5 1/2"	6'-2 1/2"	33'-3"	0			
66	2	5	5 1/4"	6'-3 3/4"	33'-9"	0			
67	2	5	6 1/4"	6'-4 3/4"	34'-3"	0			
68	2	5	6"	6'-6"	34'-9"	0			
69	2	4	6"	5'-4"	23'-7"	1	4	5'-4"	23'-4"
70	2	4	6"	5'-5"	23'-11"	1	4	5'-5"	23'-8"
71	2	4	6"	5'-6"	24'-3"	1	4	5'-6"	24'-0"
72	2	4	6"	5'-7"	24'-7"	1	4	5'-7"	24'-4"
73	2	4	6"	5'-8"	24'-11"	1	4	5'-8"	24'-8"
74	2	4	6"	5"-9"	25'-3"	1	4	5"-9"	25'-0"
75	2	4	6"	5'-10"	25'-7"	1	4	5'-10"	25'-4"
76	2	4	6"	5'-11"	25'-11"	1	4	5'-11"	25'-8"
77	2	4	6"	6'-0"	26'-3"	1	4	6'-0"	26'-0"
78	2	4	6"	6'-1 "	26'-7"	1	4	6'-1 "	26'-4"
79	2	4	6"	6'-2"	26'-11"	1	4	6'-2"	26'-8"
80	2	4	6"	6'-3"	27'-3"	1	4	6'-3"	27'-0"
81	2	4	6"	6'-4"	27'-7"	1	4	6'-4"	27'-4"

NOTES:

1. All panels on a truss shall be the same length. The minimum panel length is 5'-0" and the maximum is 6'-6".
2. A single interior section in a truss shall have an even number of panels to maintain the pattern of the vertical diagonals.
3. Use minimum number of sections for each box truss structure, while maintaining the maximum section length at 36'-6".
4. See Standard Drawing E 802-SBTS-05 for required camber.

INDIANA DEPARTMENT OF TRANSPORTATION

SIGN BOX TRUSS STRUCTURE
TABLE OF DIMENSIONS
SPANS 34' THRU 81'
SEPTEMBER 2013

STANDARD DRAWING NO. E 802-SBTS-04

SUPERVISOR, TRAFFIC DESIGN DATE

CHIEF ENGINEER DATE

REVISION TO STANDARD SPECIFICATIONS AND STANDARD DRAWINGS

PROPOSED NEW 802-SBTS-05 SIGN BOX TRUSS STRUCTURE

DIMENSIONS FOR SIGN BOX TRUSSES (82' THRU 130')

SPAN	EXTERIOR SECTIONS					INTERIOR SECTIONS			
SPAN-TRUSS LENGTH, (FT)	NO. OF EXT. SECTIONS	NO. OF PANELS PER SECTION	VARIABLE END DIMEN.	PANEL LENGTH	SECTION LENGTH	NO. OF INT. SECTIONS	NO. OF PANELS PER SECTION	PANEL LENGTH	SECTION LENGTH
82	2	4	6"	6'-5"	27'-11"	1	4	6'-5"	27'-8"
83	2	4	6"	6'-6"	28'-3"	1	4	6'-6"	28'-0"
84	2	5	5 3/4"	5'-7 3/4"	30'-5 1/2"	1	4	5'-7 3/4"	24'-7"
85	2	5	6 1/2"	5'-8 1/2"	30'-10"	1	4	5'-8 1/2"	24'-10"
86	2	5	5 1/2"	5'-9 1/2"	31'-2"	1	4	5'-9 1/2"	25'-2"
87	2	5	6 1/4"	5'-10 1/4"	31'-6 1/2"	1	4	5'-10 1/4"	25'-5"
88	2	5	7"	5'-11"	31'-11"	1	4	5'-11"	25'-8"
89	2	5	6"	6'-0"	32'-3"	1	4	6'-0"	26'-0"
90	2	5	6 3/4"	6'-0 3/4"	32'-7 1/2"	1	4	6'-0 3/4"	26'-3"
91	2	5	5 3/4"	6'-1 3/4"	32'-11 1/2"	1	4	6'-1 3/4"	26'-7"
92	2	5	6 1/2"	6'-2 1/2"	33'-4"	1	4	6'-2 1/2"	26'-10"
93	2	5	5 1/2"	6'-3 1/2"	33'-8"	1	4	6'-3 1/2"	27'-2"
94	2	5	6 1/4"	6'-4 1/4"	34'-1/2"	1	4	6'-4 1/4"	27'-5"
95	2	5	5 1/4"	6'-5 1/4"	34'-4 1/2"	1	4	6'-5 1/4"	27'-9"
96	2	5	6"	6'-6"	34'-9"	1	4	6'-6"	28'-0"
97	2	4	6"	5'-7 1/2"	24'-9"	2	4	5'-7 1/2"	24'-6"
98	2	4	6"	5'-8 1/4"	25'-0"	2	4	5'-8 1/4"	24'-9"
99	2	4	6"	5'-9"	25'-3"	2	4	5'-9"	25'-0"
100	2	4	6"	5'-9 3/4"	25'-6"	2	4	5'-9 3/4"	25'-3"
101	2	4	6"	5'-10 1/2"	25'-9"	2	4	5'-10 1/2"	25'-6"
102	2	4	6"	5'-11 1/4"	26'-0"	2	4	5'-11 1/4"	25'-9"
103	2	4	6"	6'-0"	26'-3"	2	4	6'-0"	26'-0"
104	2	4	6"	6'-0 3/4"	26'-6"	2	4	6'-0 3/4"	26'-3"
105	2	4	6"	6'-1 1/2"	26'-9"	2	4	6'-1 1/2"	26'-6"
106	2	4	6"	6'-2 1/4"	27'-0"	2	4	6'-2 1/4"	26'-9"
107	2	4	6"	6'-3"	27'-3"	2	4	6'-3"	27'-0"
108	2	4	6"	6'-3 3/4"	27'-6"	2	4	6'-3 3/4"	27'-3"
109	2	4	6"	6'-4 1/2"	27'-9"	2	4	6'-4 1/2"	27'-6"
110	2	4	6"	6'-5 1/4"	28'-0"	2	4	6'-5 1/4"	27'-9"
111	2	4	6"	6'-6"	28'-3"	2	4	6'-6"	28'-0"
112	2	5	6"	5'-3"	28'-6"	2	5	5'-3"	28'-3"
113	2	5	7"	5'-3 1/2"	28'-9 1/2"	2	5	5'-3 1/2"	28'-5 1/2"
114	2	5	5 1/2"	5'-4 1/4"	28'-11 3/4"	2	5	5'-4 1/4"	28'-9 1/4"
115	2	5	6 1/2"	5'-4 3/4"	29'-3 1/4"	2	5	5'-4 3/4"	28'-11 3/4"
116	2	5	7 1/2"	5'-5 1/4"	29'-6 3/4"	2	5	5'-5 1/4"	29'-2 1/4"
117	2	5	6"	5'-6"	29'-9"	2	5	5'-6"	29'-6"
118	2	5	7"	5'-6 1/2"	30'-0 1/2"	2	5	5'-6 1/2"	29'-8 1/2"
119	2	5	5 1/2"	5'-7 1/4"	30'-2 3/4"	2	5	5'-7 1/4"	30'-1/4"
120	2	5	6 1/2"	5'-7 3/4"	30'-6 1/4"	2	5	5'-7 3/4"	30'-2 3/4"
121	2	5	7 1/2"	5'-8 1/4"	30'-9 3/4"	2	5	5'-8 1/4"	30'-5 1/4"
122	2	5	6"	5'-9"	31'-0"	2	5	5'-9"	30'-9"
123	2	5	7"	5'-9 1/2"	31'-3 1/2"	2	5	5'-9 1/2"	30'-11 1/2"
124	2	5	5 1/2"	5'-10 1/4"	31'-5 3/4"	2	5	5'-10 1/4"	31'-3 1/4"
125	2	5	6 1/2"	5'-10 3/4"	31'-9 1/4"	2	5	5'-10 3/4"	31'-5 3/4"
126	2	5	7 1/2"	5'-11 1/4"	32' -0 3/4"	2	5	5'-11 1/4"	31'-8 1/4"
127	2	5	6"	6'-0"	32'-3"	2	5	6'-0"	32'-0"
128	2	5	7"	6'-0 1/2"	32'-6 1/2"	2	5	6'-0 1/2"	32'-2 1/2"
129	2	5	5 1/2"	6'-1 1/4"	32'-8 3/4"	2	5	6'-1 1/4"	32'-6 1/4"
130	2	5	6 1/2"	6'-1 3/4"	33'-1/4"	2	5	6'-1 3/4"	32'-8 3/4"

NOTES:

1. Camber diagrams for truss structures with 2 to 4 sections are shown. Cambers shown are for fabrication only and are measured with trusses fully supported at no-load conditions. Allowable camber tolerance for truss is 25% of specific camber value.
2. See Standard Drawing E 802-SBTS-04 for additional notes.

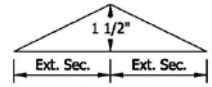

CAMBER DIAGRAM (2-Section Truss)

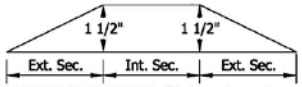

CAMBER DIAGRAM (3-Section Truss)

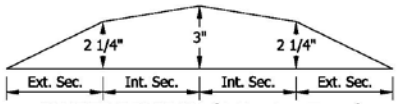

CAMBER DIAGRAM (4-Section Truss)

INDIANA DEPARTMENT OF TRANSPORTATION

SIGN BOX TRUSS STRUCTURE
TABLE OF DIMENSIONS
SPANS 82' THRU 130' AND CAMBER

SEPTEMBER 2013

STANDARD DRAWING NO. E 802-SBTS-05

SUPERVISOR, TRAFFIC DESIGN DATE

CHIEF ENGINEER DATE

REVISION TO STANDARD SPECIFICATIONS AND STANDARD DRAWINGS

PROPOSED NEW 802-SBTS-06 SIGN BOX TRUSS STRUCTURE

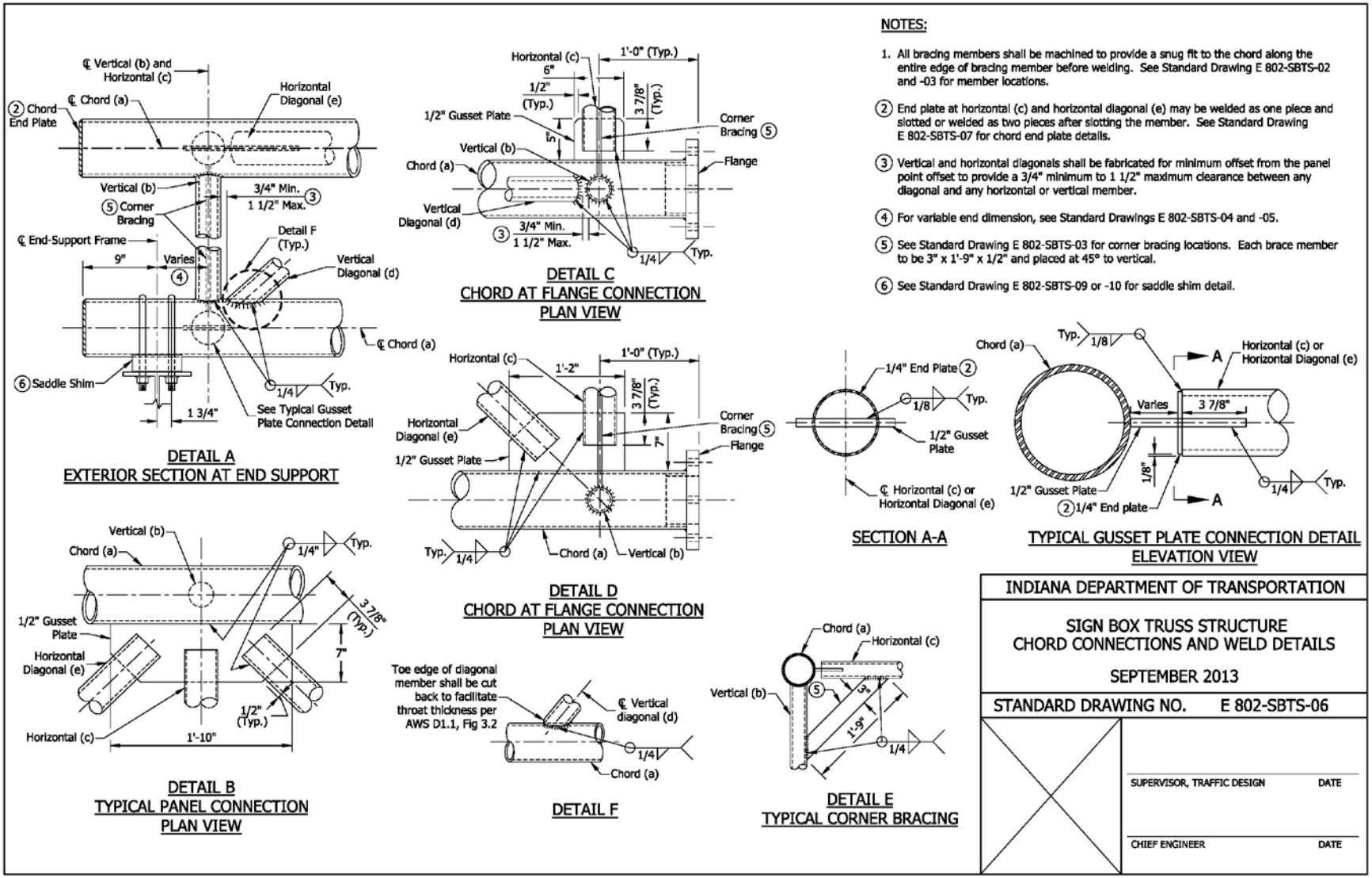

REVISION TO STANDARD SPECIFICATIONS AND STANDARD DRAWINGS

PROPOSED NEW 802-SBTS-07 SIGN BOX TRUSS STRUCTURE

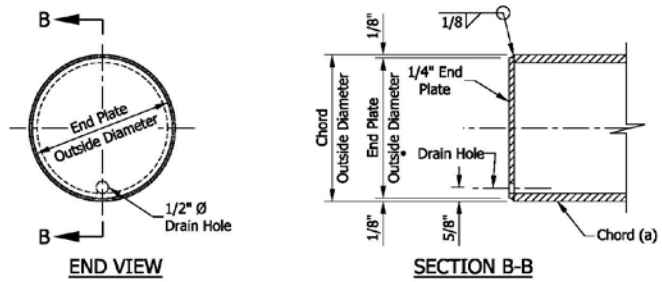

END VIEW

SECTION B-B

CHORD END PLATE DETAILS

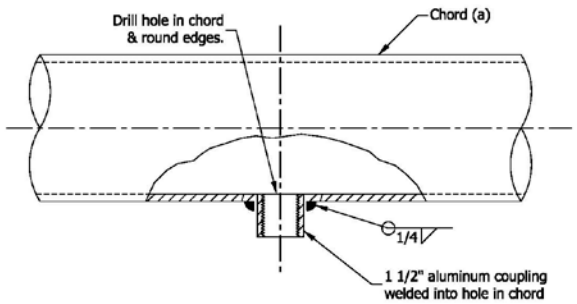

WIRE OUTLET DETAIL

TABLE OF FLANGE DIMENSIONS				
TRUSS CHORD O.D. x THK.	BOLT SIZE	DIMENSION		
		A	B	C
6" x 1/4"	7/8"	13"	9"	5"
6 1/2" x 3/8"	7/8"	14"	10"	5 1/4"
7" x 3/8"	7/8"	14"	10"	5 3/4"
7" x 1/2"	7/8"	14"	10"	5 1/2"

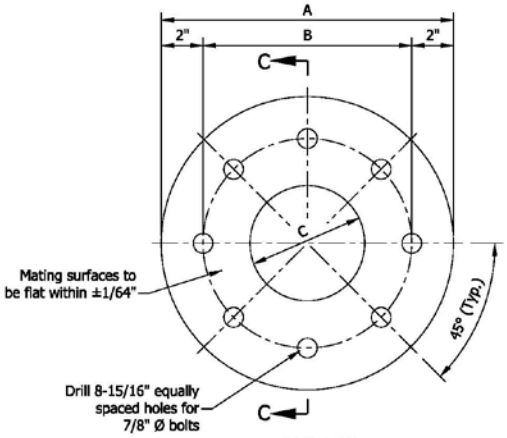

END VIEW

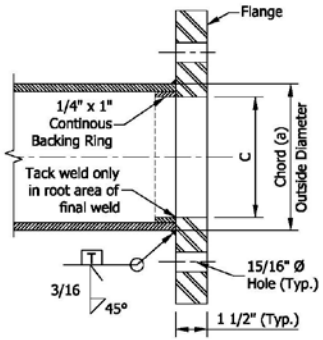

SECTION C-C

FLANGE DETAILS

INDIANA DEPARTMENT OF TRANSPORTATION

SIGN BOX TRUSS STRUCTURE
FLANGE, CHORD END PLATE, AND WIRE
OUTLET DETAILS

SEPTEMBER 2013

STANDARD DRAWING NO. E 802-SBTS-07

SUPERVISOR, TRAFFIC DESIGN DATE

CHIEF ENGINEER DATE

REVISION TO STANDARD SPECIFICATIONS AND STANDARD DRAWINGS

PROPOSED NEW 802-SBTS-08 SIGN BOX TRUSS STRUCTURE

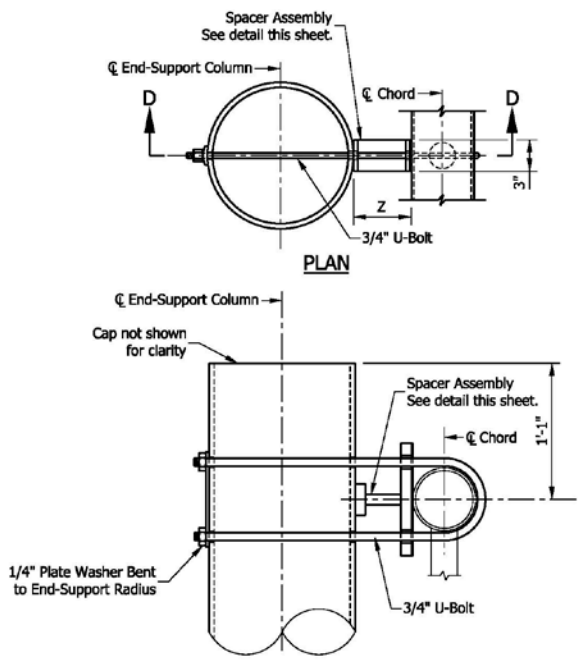

SECTION D-D
UPPER CHORD CONNECTION DETAILS

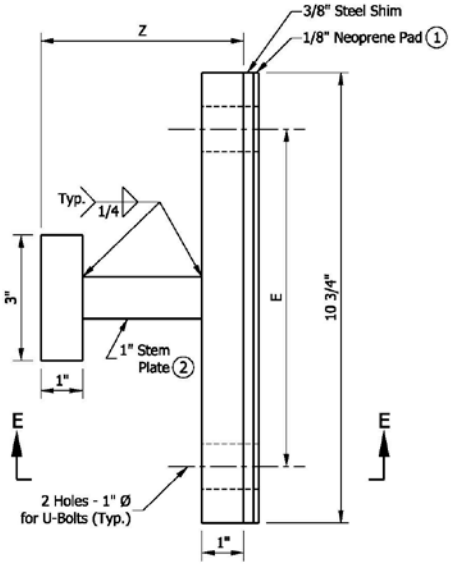

ELEVATION
END SUPPORT SPACER ASSEMBLY DETAIL

NOTES:

1. Provide isolation from steel-dissimilar metal as required.
2. For trusses type D or E, the 1" stem plate is not required. Fillet weld front and rear plates together.
3. Dimension E is equal to the diameter of chord (a) plus 1".

SPACER ASSEMBLY DIMENSIONS

TRUSS TYPE	END-SUPPORT COLUMN SIZE (h)	CHORD (a)	Ø OF U-BOLT BEND	E	Z	L
	O.D. IN.	O.D. IN.	(D) IN.	IN.	IN.	IN.
A	14	6	6 1/16	7	4 1/2	24
B	14	6 1/2	6 9/16	7 1/2	4 1/4	24
C	14	7	7 1/16	8	4	24
D	18	7	7 1/16	8	2	26
E	18	7	7 1/16	8	2	26

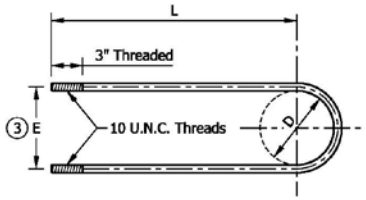

3/4" DIA. STAINLESS STEEL U-BOLT DETAIL

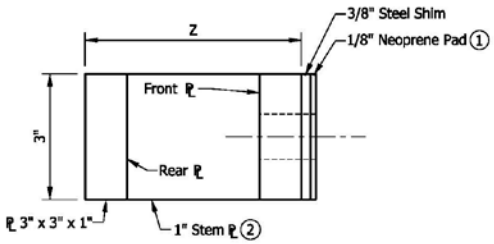

SECTION E-E

INDIANA DEPARTMENT OF TRANSPORTATION

SIGN BOX TRUSS STRUCTURE
END-SUPPORT
UPPER CHORD CONNECTION DETAILS
SEPTEMBER 2013

STANDARD DRAWING NO. E 802-SBTS-08

SUPERVISOR, TRAFFIC DESIGN DATE

CHIEF ENGINEER DATE

REVISION TO STANDARD SPECIFICATIONS AND STANDARD DRAWINGS

PROPOSED NEW 802-SBTS-09 SIGN BOX TRUSS STRUCTURE

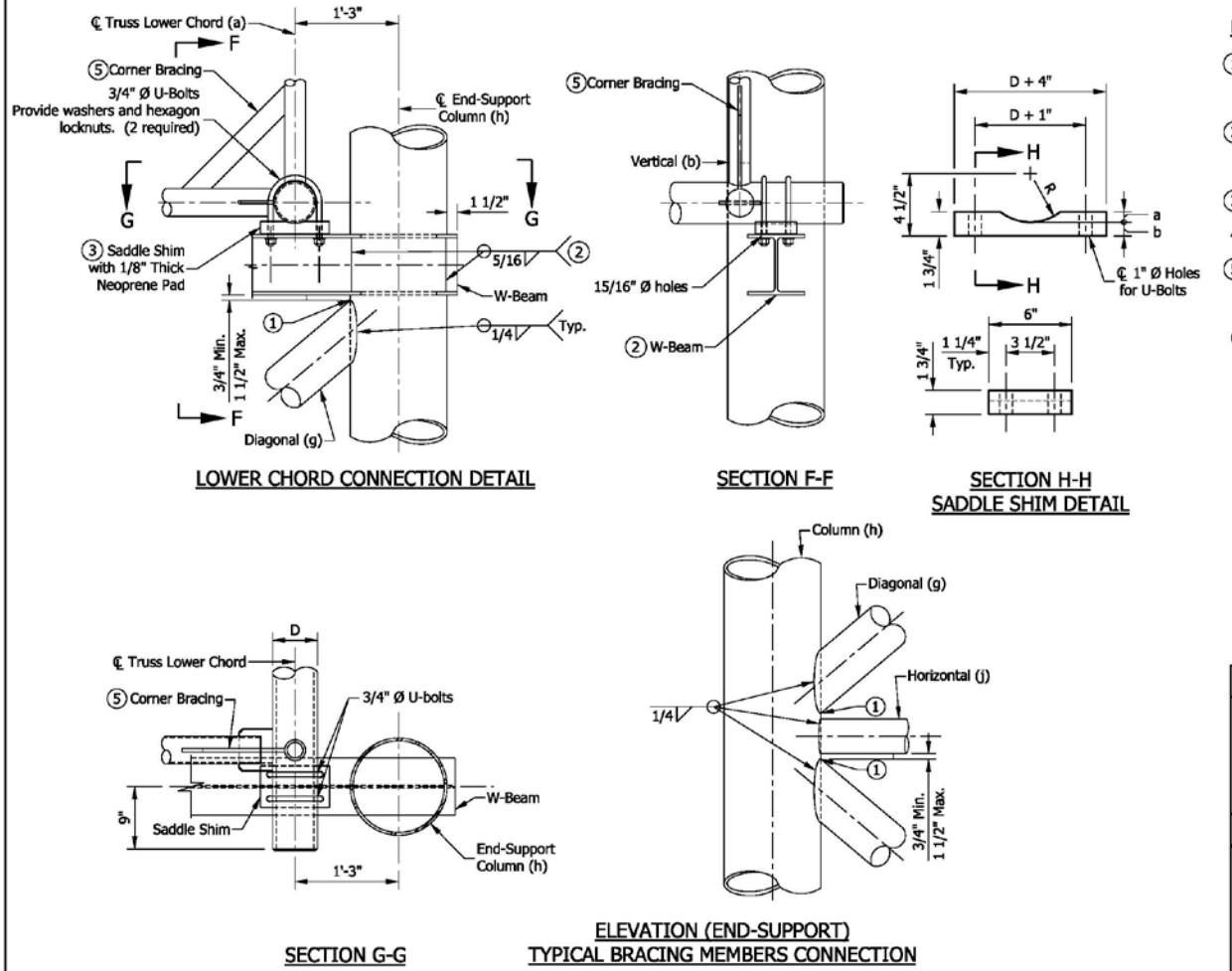

NOTES:

1. Toe edge of diagonal member shall be cut back to facilitate throat thickness. See Standard Drawing E 802-SBTS-06 Detail F for toe-edge detail.
2. Cut holes in end support columns for W-beams to pass through. Holes to have 1/8" maximum clearance to W-beam. Holes in opposite sides of column to be checked for proper alignment prior to cutting.
3. Provide neoprene pads at all chord-to-W-beam bearing surfaces.
4. See Standard Drawing E 802-SBTS-03 for end-support member sizes.
5. A corner brace is required on each of the eight external corners of exterior and interior sections. Each brace shall be 1'-9" x 3" x 1/2". See Standard Drawing E 802-SBTS-06 for angle bracing Detail E.
6. See Standard Drawing E 802-SBTS-10 for HSS square-beam as an alternate to truss supporting W-beam.

D	a	b
6"	9/32"	1 15/32"
6 1/2"	17/32"	1 7/32"
7"	25/32"	31/32"

R = D/2 + 1/32"

R + b = 4 1/2"

D = Outside Diameter of Chord(a).

INDIANA DEPARTMENT OF TRANSPORTATION

SIGN BOX TRUSS STRUCTURE
END-SUPPORT LOWER CHORD
CONNECTION DETAILS

SEPTEMBER 2013

STANDARD DRAWING NO. E 802-SBTS-09

SUPERVISOR, TRAFFIC DESIGN DATE

CHIEF ENGINEER DATE

REVISION TO STANDARD SPECIFICATIONS AND STANDARD DRAWINGS

PROPOSED NEW 802-SBTS-10 SIGN BOX TRUSS STRUCTURE

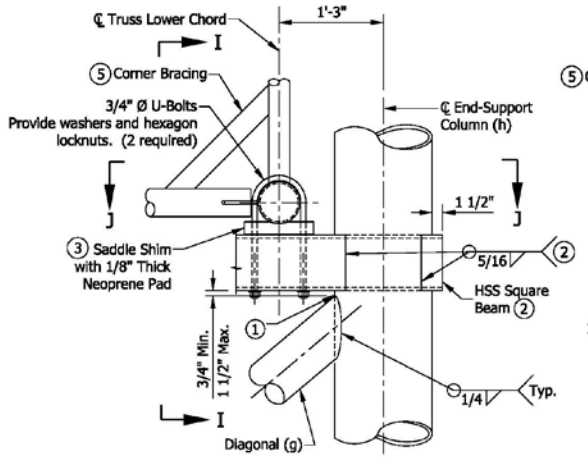

LOWER CHORD CONNECTION DETAIL

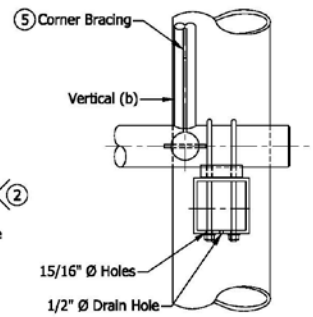

SECTION I-I

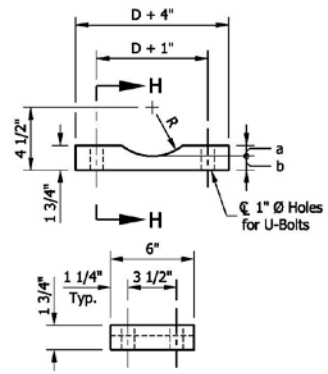

SECTION H-H
SADDLE SHIM DETAIL

NOTES:

1. Toe edge of diagonal member shall be cut back to facilitate throat thickness. See Standard Drawing E 802-SBTS-06 Detail F for toe-edge detail.
2. Cut holes in end support columns for square beams to pass through. Holes to have 1/8" maximum clearance to square beam. Holes in opposite sides of column to be checked for proper alignment prior to cutting.
3. Provide neoprene pads at all chord-to-square-beam bearing surfaces.
4. See Standard Drawing E 802-SBTS-03 for end support member sizes.
5. A corner brace is required on each of the eight external corners of exterior and interior sections. Each brace shall be 1'-9" x 3" x 1/2". See Standard Drawing E 802-SBTS-06 for angle bracing Detail E.

D	a	b
6"	9/32"	1 15/32"
6 1/2"	17/32"	1 7/32"
7"	25/32"	31/32"

R = D/2 + 1/32"

R + b = 4 1/2"

D = Outside Diameter of Chord(a).

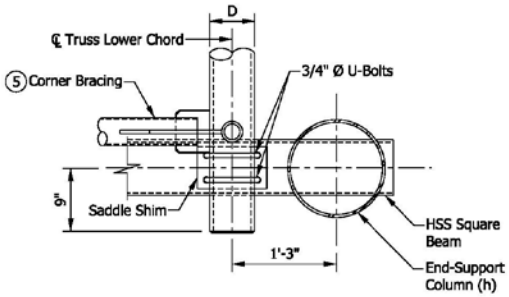

SECTION J-J

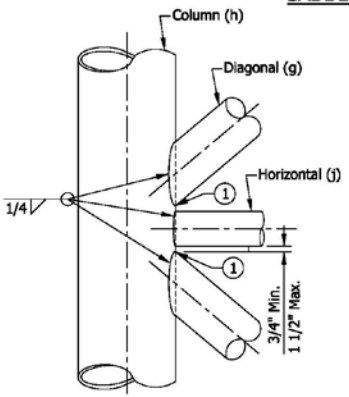

ELEVATION (END-SUPPORT)
TYPICAL BRACING MEMBERS CONNECTION

INDIANA DEPARTMENT OF TRANSPORTATION

SIGN BOX TRUSS STRUCTURE
END SUPPORT LOWER CHORD
CONNECTION DETAILS, ALTERNATE HSS BEAM
SEPTEMBER 2013

STANDARD DRAWING NO. E 802-SBTS-10

SUPERVISOR, TRAFFIC DESIGN DATE

CHIEF ENGINEER DATE

REVISION TO STANDARD SPECIFICATIONS AND STANDARD DRAWINGS

PROPOSED NEW 802-SBTS-11 SIGN BOX TRUSS STRUCTURE (REVISED)

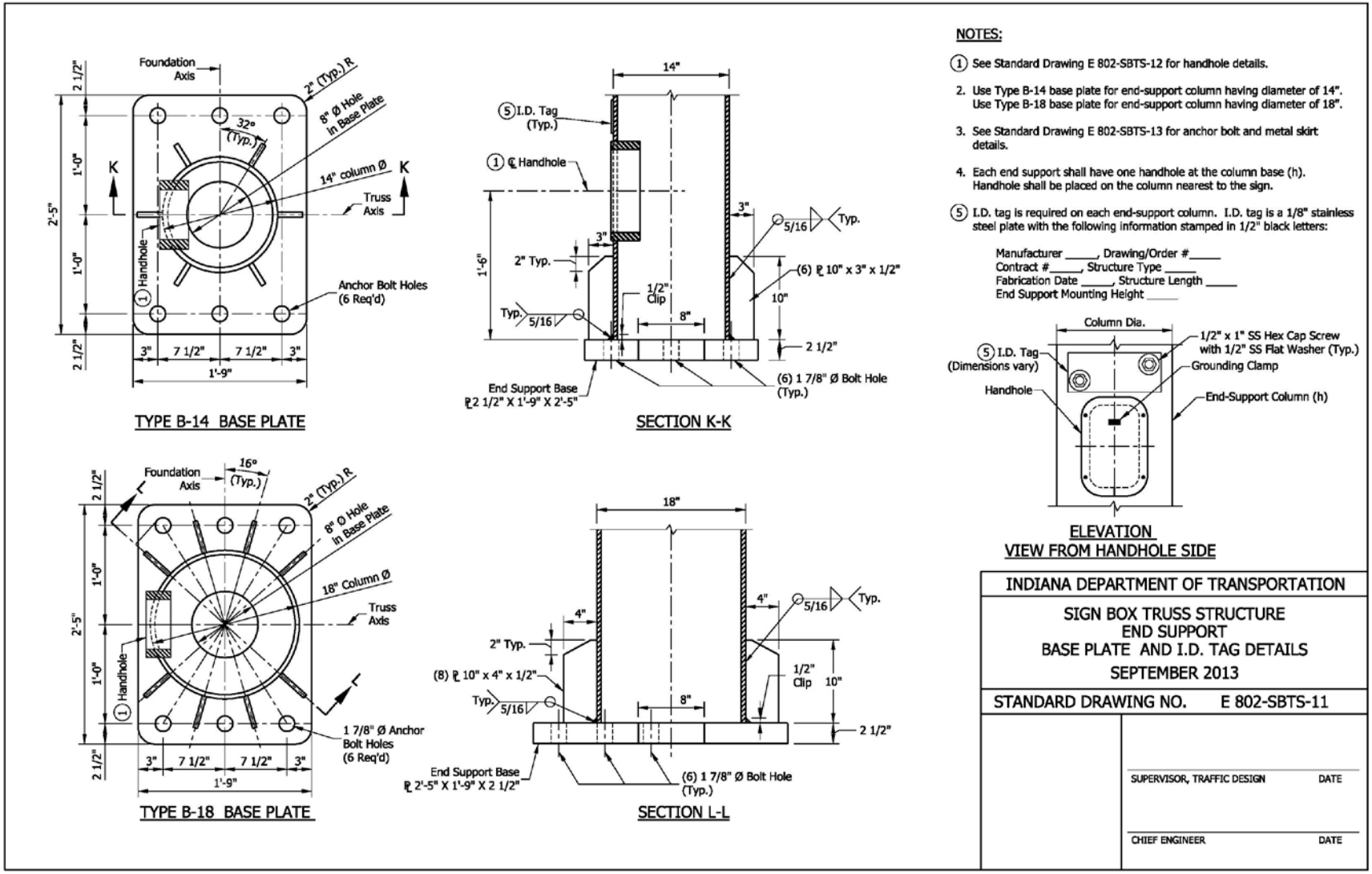

REVISION TO STANDARD SPECIFICATIONS AND STANDARD DRAWINGS

PROPOSED NEW 802-SBTS-12 SIGN BOX TRUSS STRUCTURE

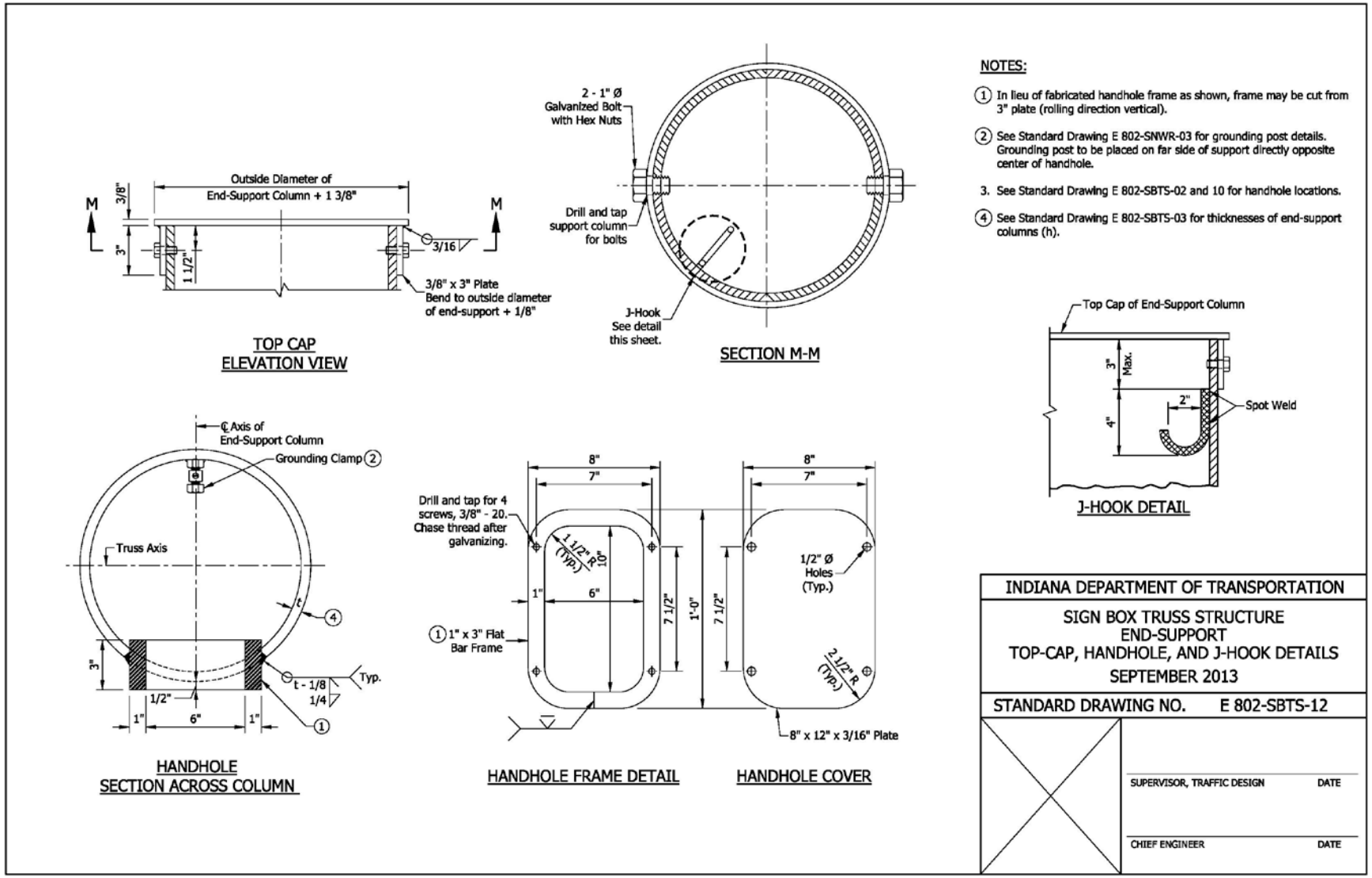

REVISION TO STANDARD SPECIFICATIONS AND STANDARD DRAWINGS

PROPOSED NEW 802-SBTS-13 SIGN BOX TRUSS STRUCTURE

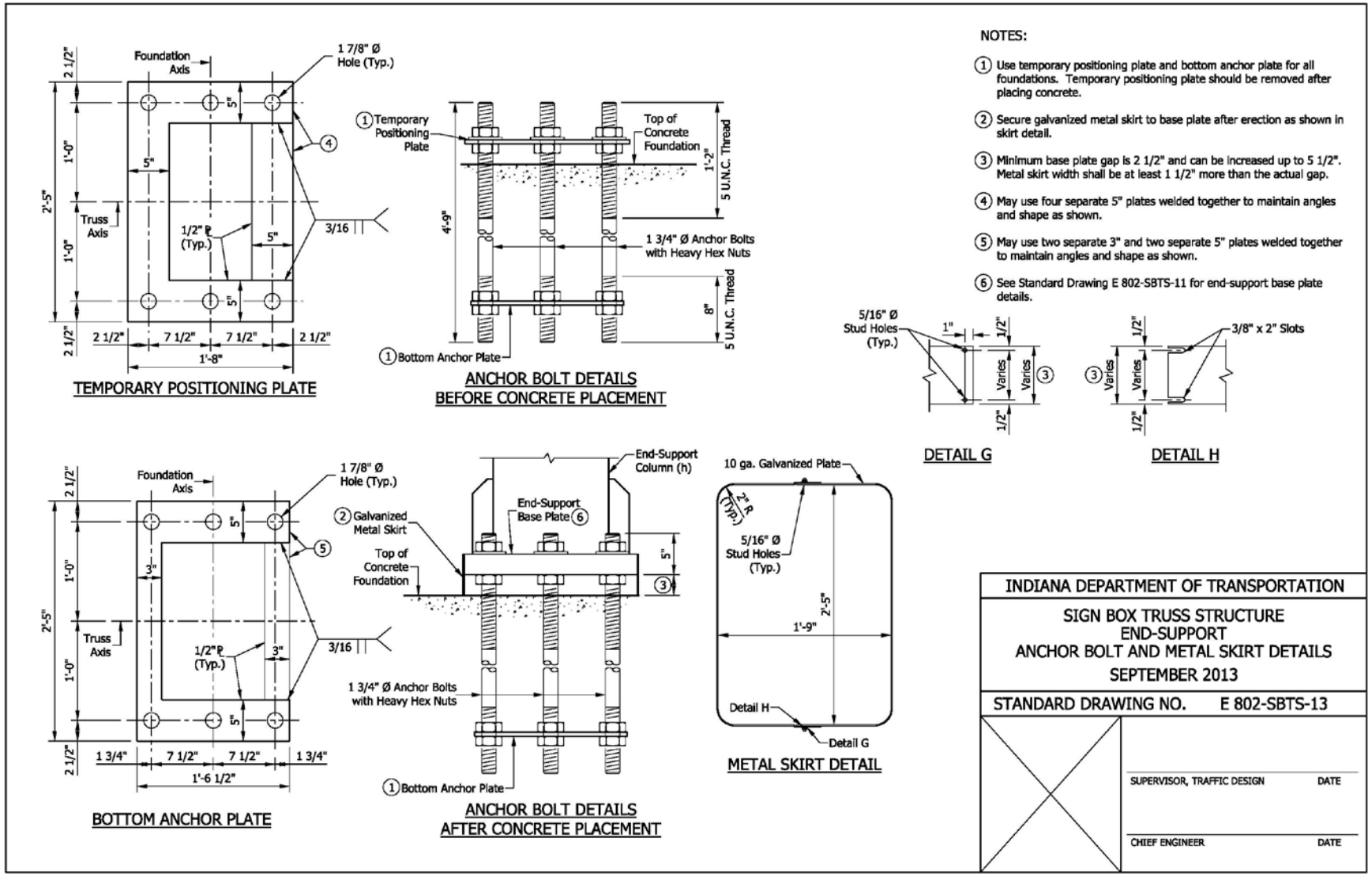

REVISION TO STANDARD SPECIFICATIONS AND STANDARD DRAWINGS

PROPOSED NEW 802-SBTS-14 SIGN BOX TRUSS STRUCTURE

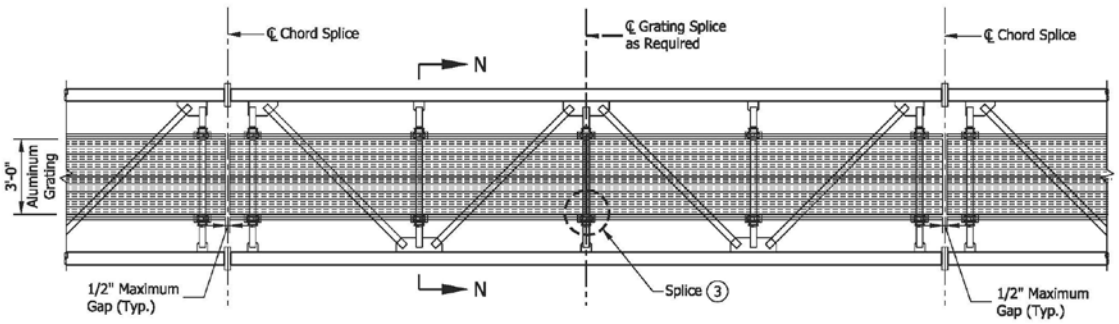

WALKWAY GRATING PLAN

NOTES:

1. Interior walkway gratings shall be extruded I-bars 2" x 1/4" x 1 3/16" center-to-center. Cross bars shall have a maximum gap of 4". Moment of Inertia, I_x = 1.382 in^4. A different grating of equal strength may be used upon approval.

(2) Walkway grating width is nominal and may vary ±1/2" based on available standard widths.

(3) Interior walkway gratings can be spliced on center of any horizontal truss member as needed. See Standard Drawing E 802-SBTS-15 for typical interior walkway grating splice detail.

4. Interior walkway grating shall run the full length, center-to-center, of end-support truss members plus 9" at each end.

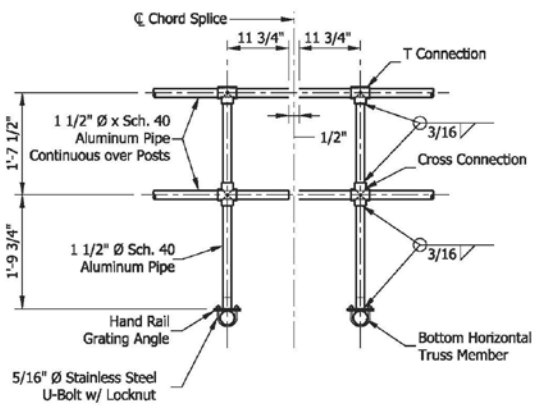

TYPICAL HANDRAIL DETAIL

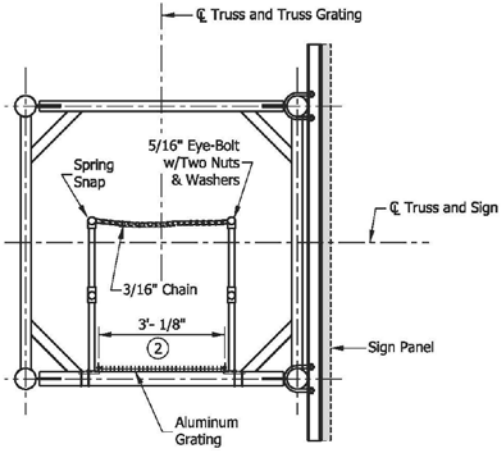

SECTION N-N

INDIANA DEPARTMENT OF TRANSPORTATION

SIGN BOX TRUSS STRUCTURE
INTERIOR WALKWAY GRATING DETAILS

SEPTEMBER 2013

STANDARD DRAWING NO. E 802-SBTS-14

SUPERVISOR, TRAFFIC DESIGN DATE

CHIEF ENGINEER DATE

REVISION TO STANDARD SPECIFICATIONS AND STANDARD DRAWINGS

PROPOSED NEW 802-SBTS-15 SIGN BOX TRUSS STRUCTURE

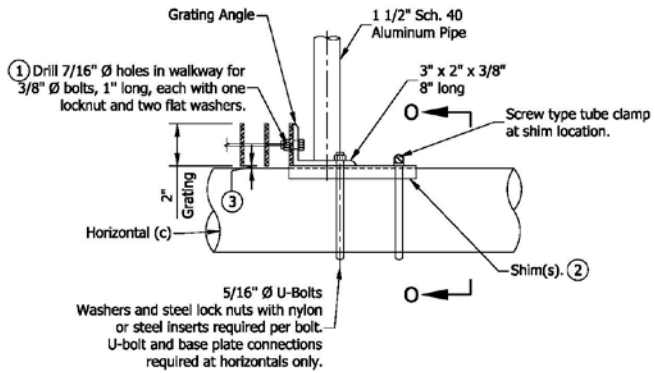

GRATNG SUPPORT DETAIL

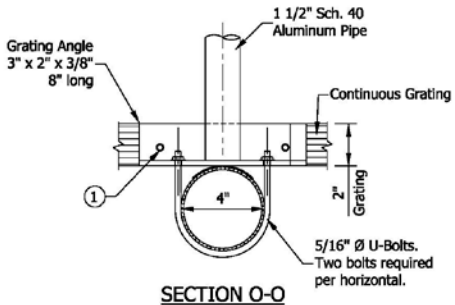

SECTION O-O

NOTES:

(1) Drilling of holes in grating may be done in shop or field, based on Contractor's preference and subject to accurate alignment.

(2) Shims may be placed as shown, if needed to compensate for alignment variations between horizontal and diagonal pipes beyond adjustment provided by angles. Thicker shims may be used subject to shims performing properly.

(3) Tube-to-grating gap may vary from 0 to 1/2" max. to align walkway, allow for camber.

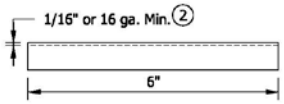

ELEVATION

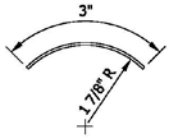

END VIEW

SHIM DETAIL

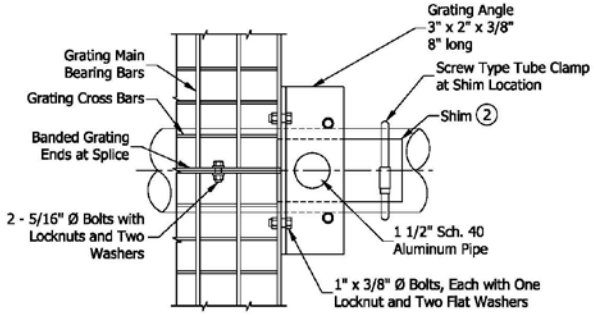

GRATING SPLICE DETAIL

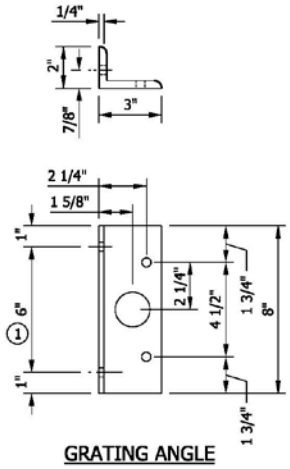

GRATING ANGLE

INDIANA DEPARTMENT OF TRANSPORTATION

SIGN BOX TRUSS STRUCTURE
INTERIOR WALKWAY GRATING DETAILS

SEPTEMBER 2013

STANDARD DRAWING NO. E 802-SBTS-15

SUPERVISOR, TRAFFIC DESIGN DATE

CHIEF ENGINEER DATE

REVISION TO STANDARD SPECIFICATIONS AND STANDARD DRAWINGS

PROPOSED NEW 802-SBTS-16 SIGN BOX TRUSS STRUCTURE

NOTES:

1. For location and data for sign panels, see plan details cross section.
2. Signs > 7' in height, bracket spacing 5' max.
   Signs ≤ 7' in height, bracket spacing 7' max.
3. Dimension X depends on the height of the sign. Sign is to be centered vertically on truss.
4. See Standard Drawing E 802-SBTS-17 for Plan, and E 802-SBTS-18 for Section Q-Q.
5. Sign shall be installed on truss with independent brackets WF (A-N) 4 x 3.06. Lighting walkway may be extended to comply with the 9" maximum unsupported grating.

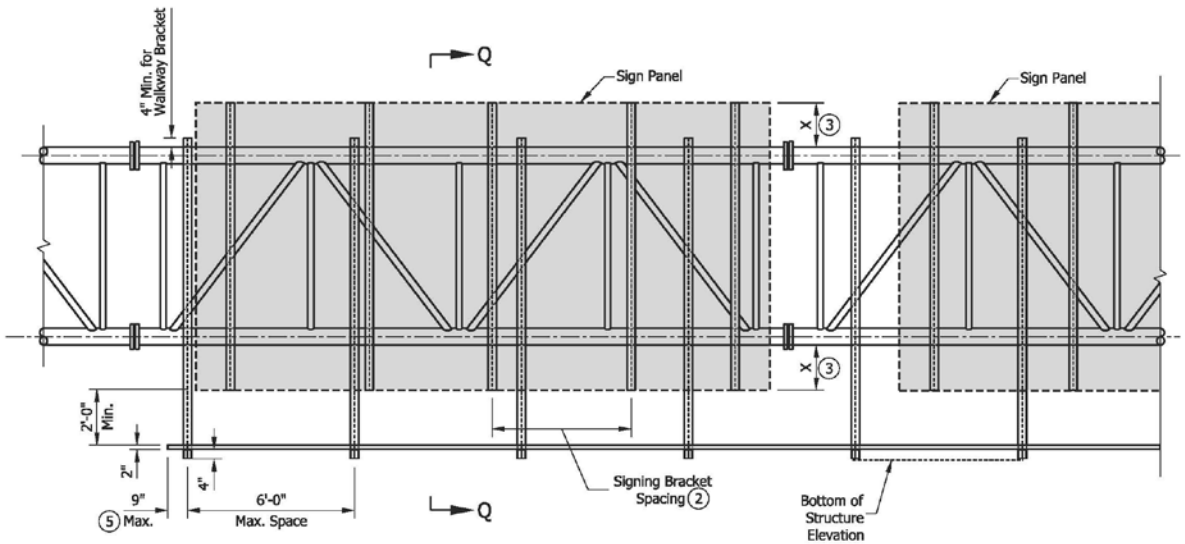

TYPICAL FRONT ELEVATION
(Lights & handrail omitted for clarity)

INDIANA DEPARTMENT OF TRANSPORTATION

SIGN BOX TRUSS STRUCTURE
LIGHTING WALKWAY

SEPTEMBER 2013

STANDARD DRAWING NO. E 802-SBTS-16

SUPERVISOR, TRAFFIC DESIGN DATE

CHIEF ENGINEER DATE

REVISION TO STANDARD SPECIFICATIONS AND STANDARD DRAWINGS

PROPOSED NEW 802-SBTS-17 SIGN BOX TRUSS STRUCTURE

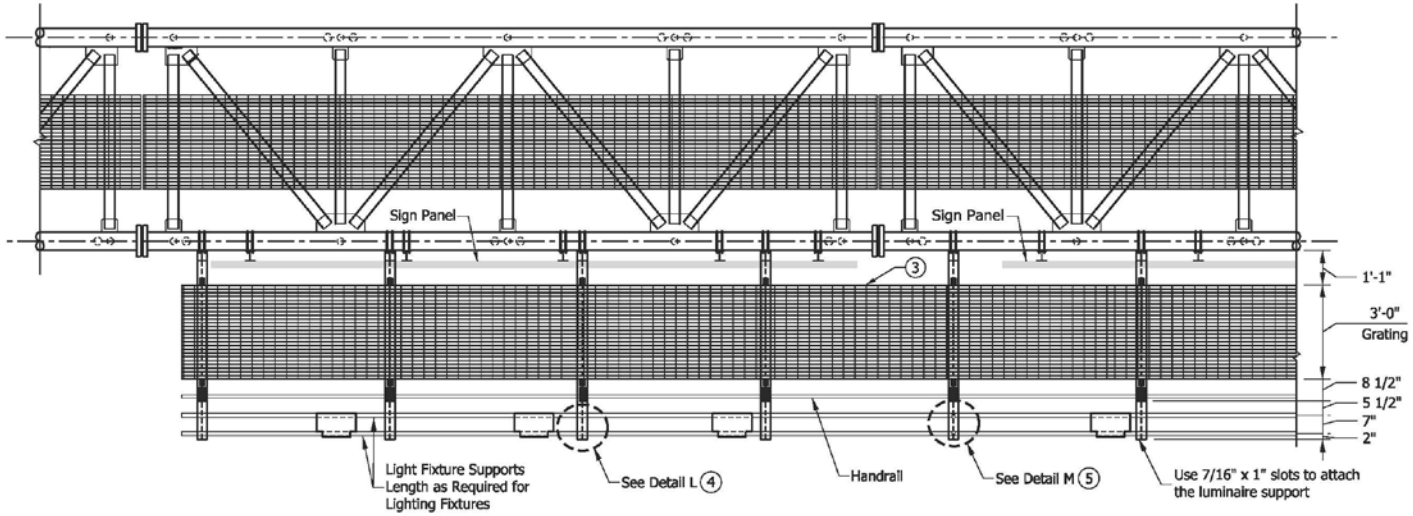

PLAN

NOTES:

1. Handrail and grating shall span a minimum of 3 brackets.
2. Grating splice located on center of L-bracket only. See Standard Drawing E 802-SBTS-21, Detail M.

(3) Lighting walkway gratings are extruded I-bars 2" x 1/4" spaced at 1 3/16" center-to-center. Cross bars shall have a maximum gap of 4". Moment of Inertia, I_x = 1.382 in^4. A different grating of equal strength may be used upon approval.

(4) See Standard Drawing E 802-SBTS-21, Detail L.

(5) See Standard Drawing E 802-SBTS-21, Detail M.

INDIANA DEPARTMENT OF TRANSPORTATION

SIGN BOX TRUSS STRUCTURE
LIGHTING WALKWAY

SEPTEMBER 2013

STANDARD DRAWING NO. E 802-SBTS-17

SUPERVISOR, TRAFFIC DESIGN DATE

CHIEF ENGINEER DATE

REVISION TO STANDARD SPECIFICATIONS AND STANDARD DRAWINGS

PROPOSED NEW 802-SBTS-18 SIGN BOX TRUSS STRUCTURE

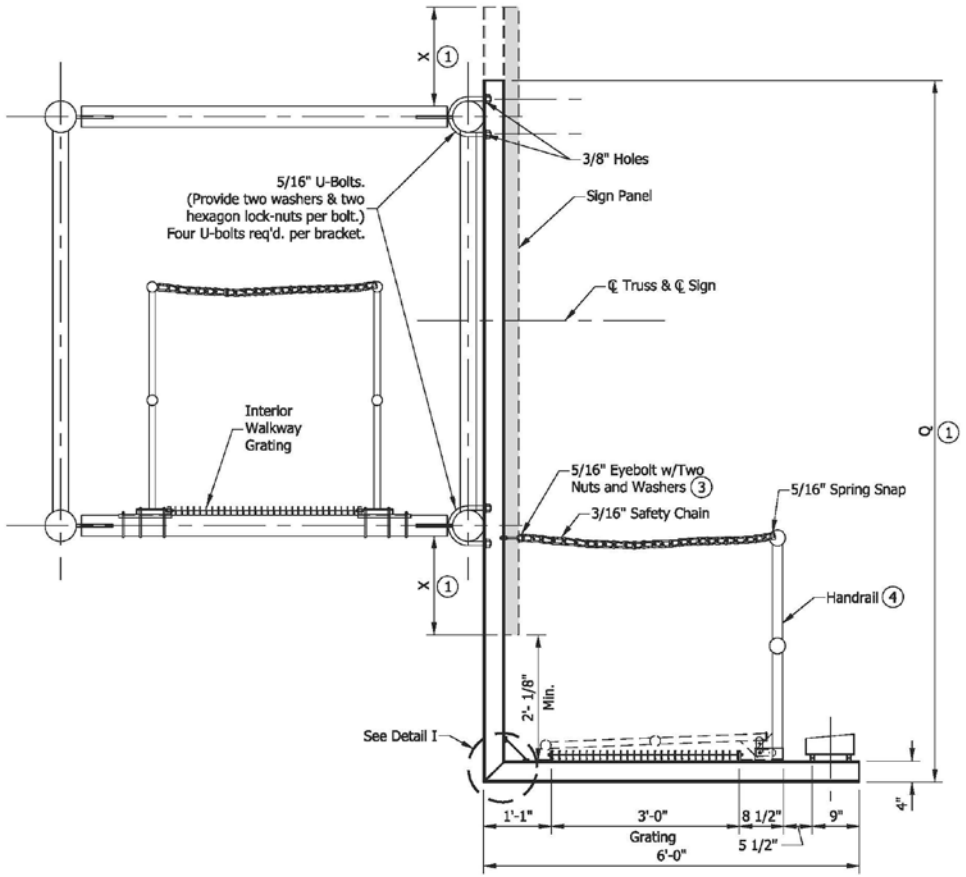

SECTION Q-Q

NOTES:

1. Dimensions X and Q to be determined by Contractor to fit signs.
2. Sign panel shall be placed symmetrically about centerline of truss.
3. Eyebolt shall be attached to web of bracket at approximate elevation of upper handrail pipe.
4. See Standard Drawing E 802-SBTS-19 for handrail details.

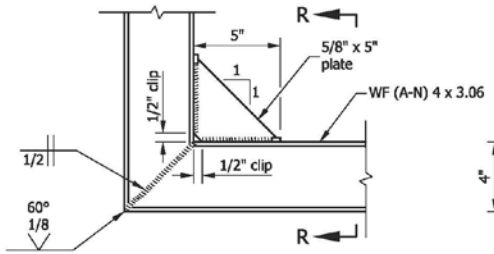

DETAIL I

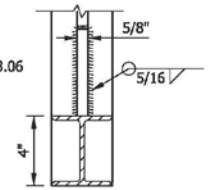

SECTION R-R

INDIANA DEPARTMENT OF TRANSPORTATION

SIGN BOX TRUSS STRUCTURE
LIGHTING WALKWAY PROFILE

SEPTEMBER 2013

STANDARD DRAWING NO. E 802-SBTS-18

SUPERVISOR, TRAFFIC DESIGN DATE

CHIEF ENGINEER DATE

REVISION TO STANDARD SPECIFICATIONS AND STANDARD DRAWINGS

PROPOSED NEW 802-SBTS-19 SIGN BOX TRUSS STRUCTURE

NOTES:

1. Horizontal rail member shall be continuous through fitting. Manufacturer shall provide 7/16" holes for fitting 3/8" bolt. Field drill 7/16" hole in horizontal rail member. Attach handrail with 3/8" bolt, washer, and locknut.
2. Rail and grating shall span a minimum of three brackets.
3. See Standard Drawing E 802-SBTS-20 for Detail J.
4. See Standard Drawing E 802-SBTS-20 for Detail K.

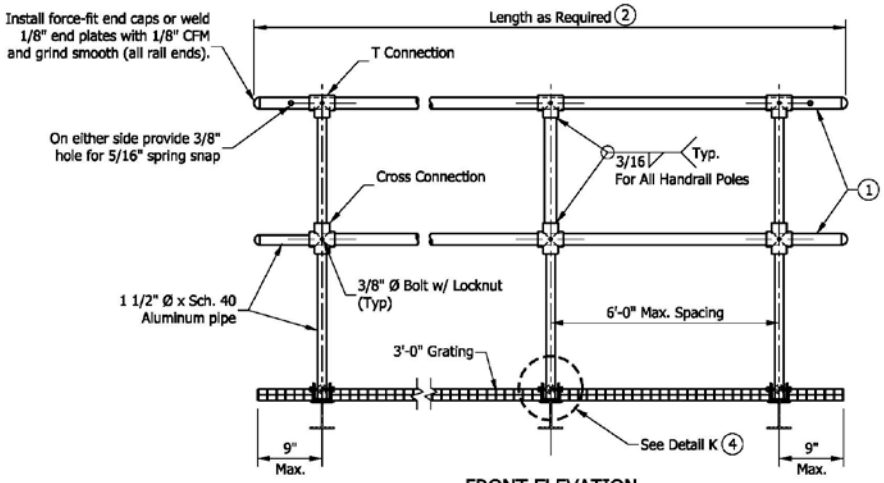

FRONT ELEVATION

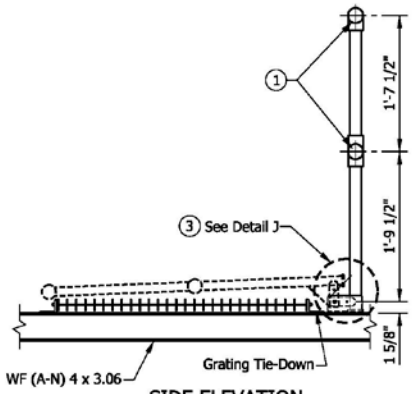

SIDE ELEVATION

INDIANA DEPARTMENT OF TRANSPORTATION	
SIGN BOX TRUSS STRUCTURE LIGHTING WALKWAY AND HANDRAIL ASSEMBLY SEPTEMBER 2013	
STANDARD DRAWING NO. E 802-SBTS-19	
	SUPERVISOR, TRAFFIC DESIGN DATE CHIEF ENGINEER DATE

REVISION TO STANDARD SPECIFICATIONS AND STANDARD DRAWINGS

PROPOSED NEW 802-SBTS-20 SIGN BOX TRUSS STRUCTURE

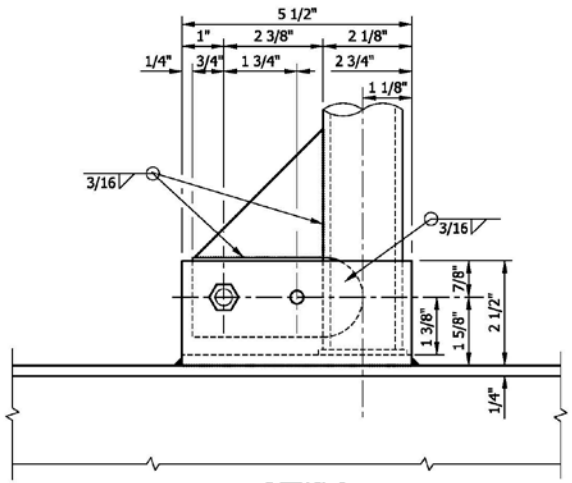

DETAIL J
SIDE ELEVATION

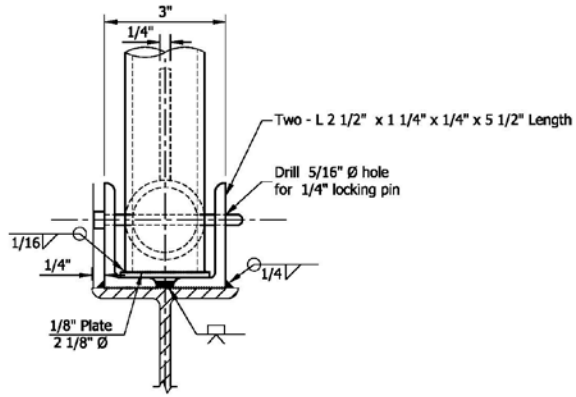

DETAIL K
FRONT ELEVATION

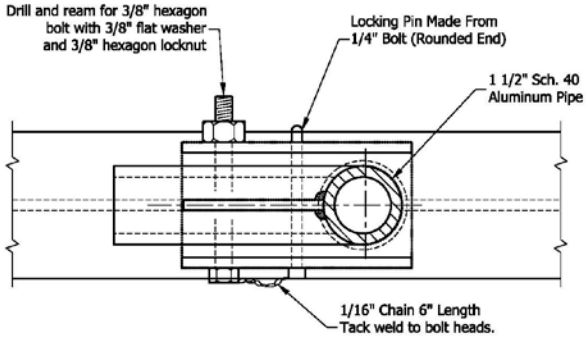

PLAN
DETAILS OF HANDRAIL HINGE

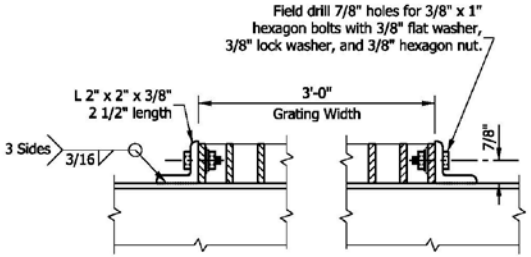

GRATING TIE DOWN
(Two req'd per walkway bracket)

INDIANA DEPARTMENT OF TRANSPORTATION

SIGN BOX TRUSS STRUCTURE
LIGHTING WALKWAY, HANDRAIL HINGE, AND
GRATING DETAILS
SEPTEMBER 2013

STANDARD DRAWING NO. E 802-SBTS-20

SUPERVISOR, TRAFFIC DESIGN DATE

CHIEF ENGINEER DATE

REVISION TO STANDARD SPECIFICATIONS AND STANDARD DRAWINGS

PROPOSED NEW 802-SBTS-21 SIGN BOX TRUSS STRUCTURE

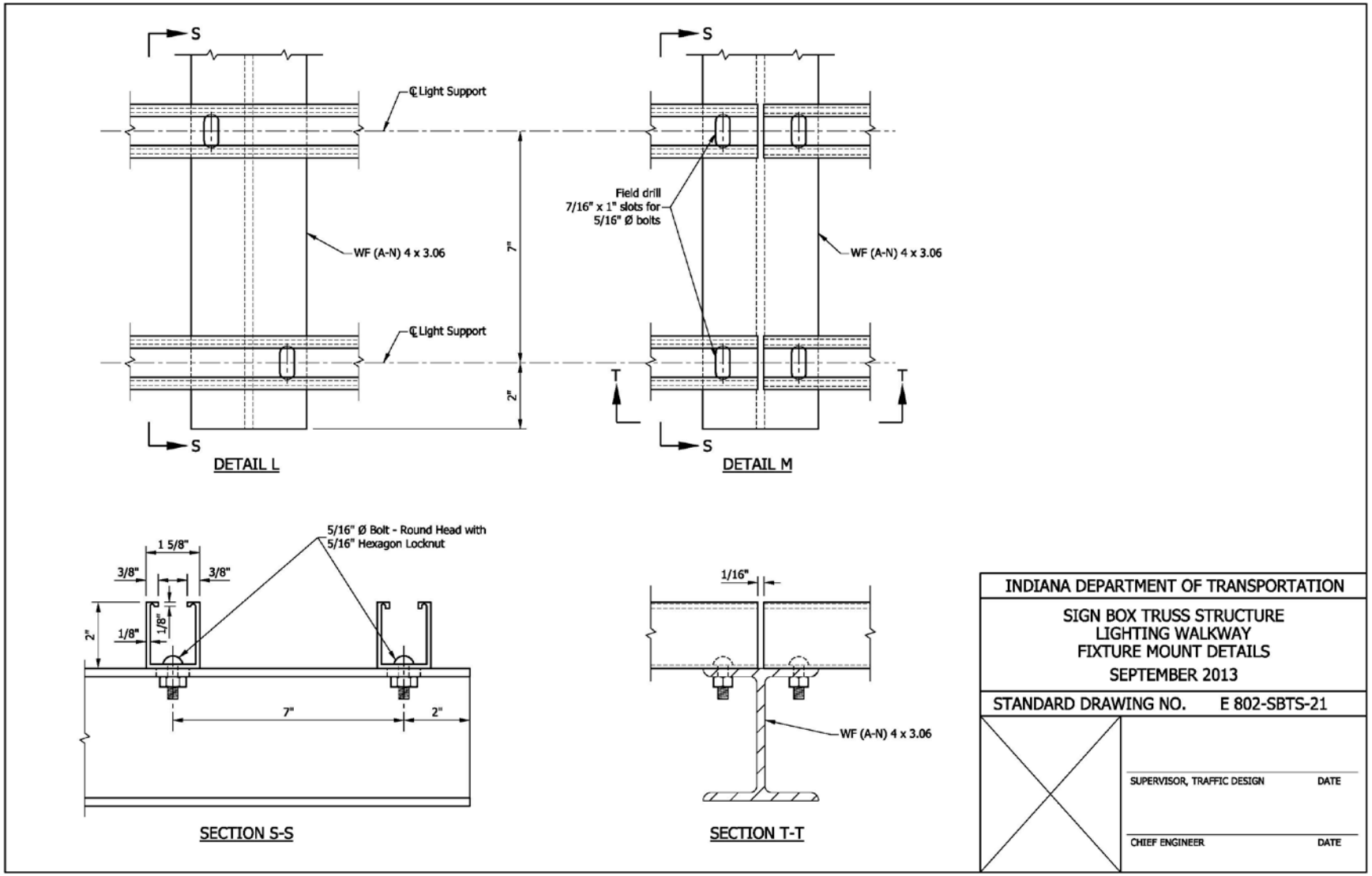

REVISION TO STANDARD SPECIFICATIONS AND STANDARD DRAWINGS

PROPOSED NEW 802-SBTS-22 SIGN BOX TRUSS STRUCTURE

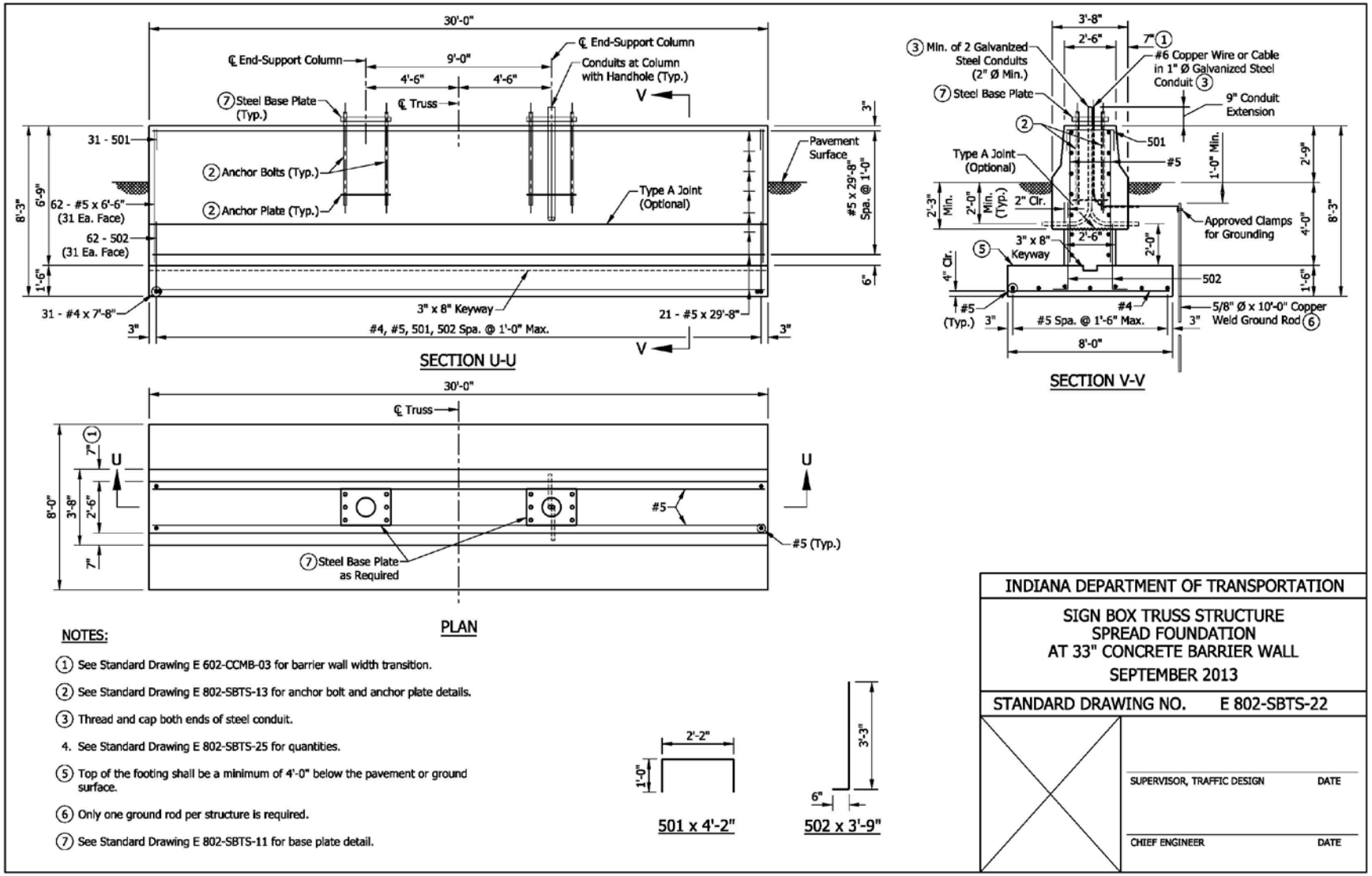

REVISION TO STANDARD SPECIFICATIONS AND STANDARD DRAWINGS

PROPOSED NEW 802-SBTS-23 SIGN BOX TRUSS STRUCTURE

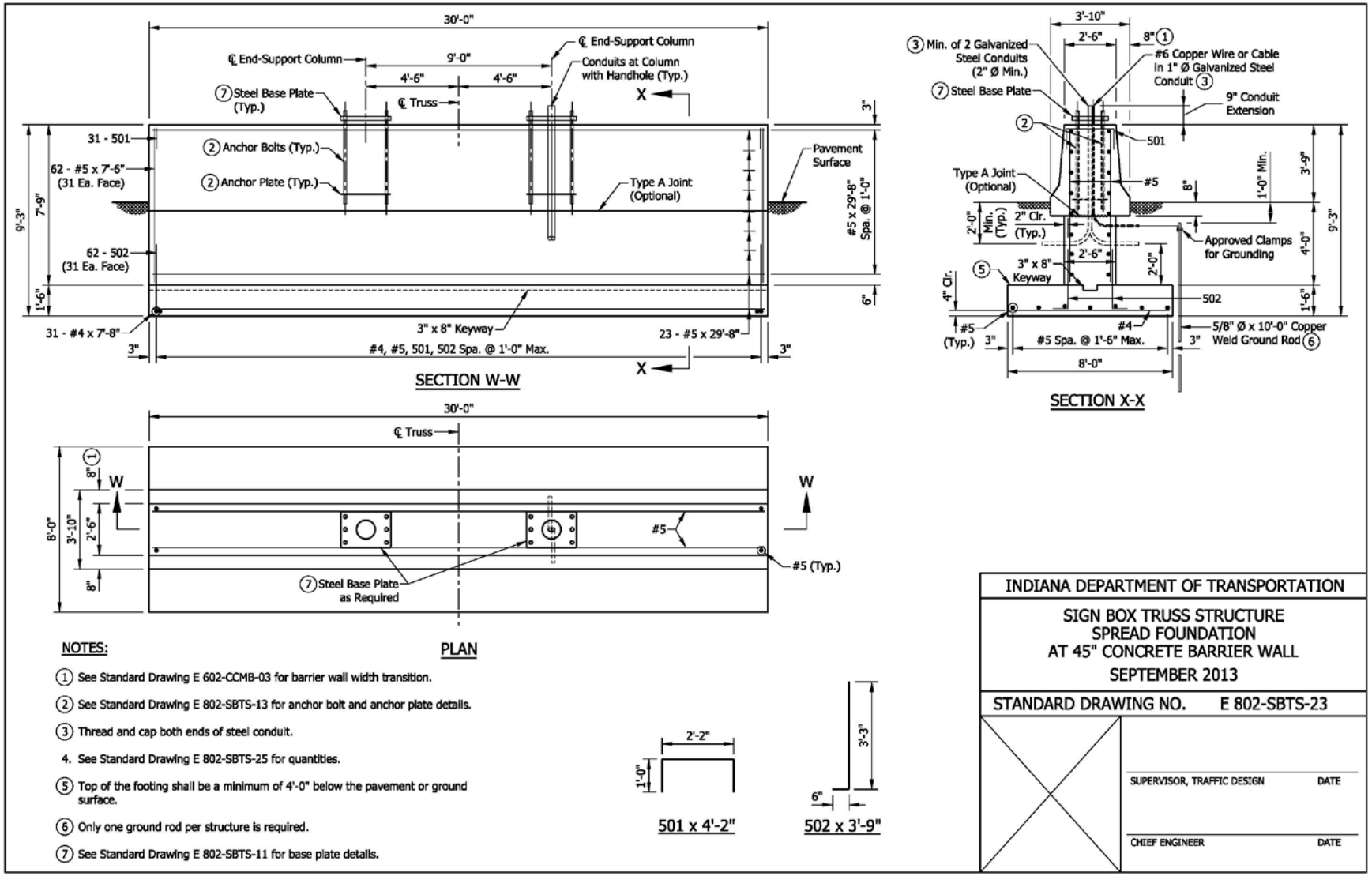

REVISION TO STANDARD SPECIFICATIONS AND STANDARD DRAWINGS

PROPOSED NEW 802-SBTS-24 SIGN BOX TRUSS STRUCTURE

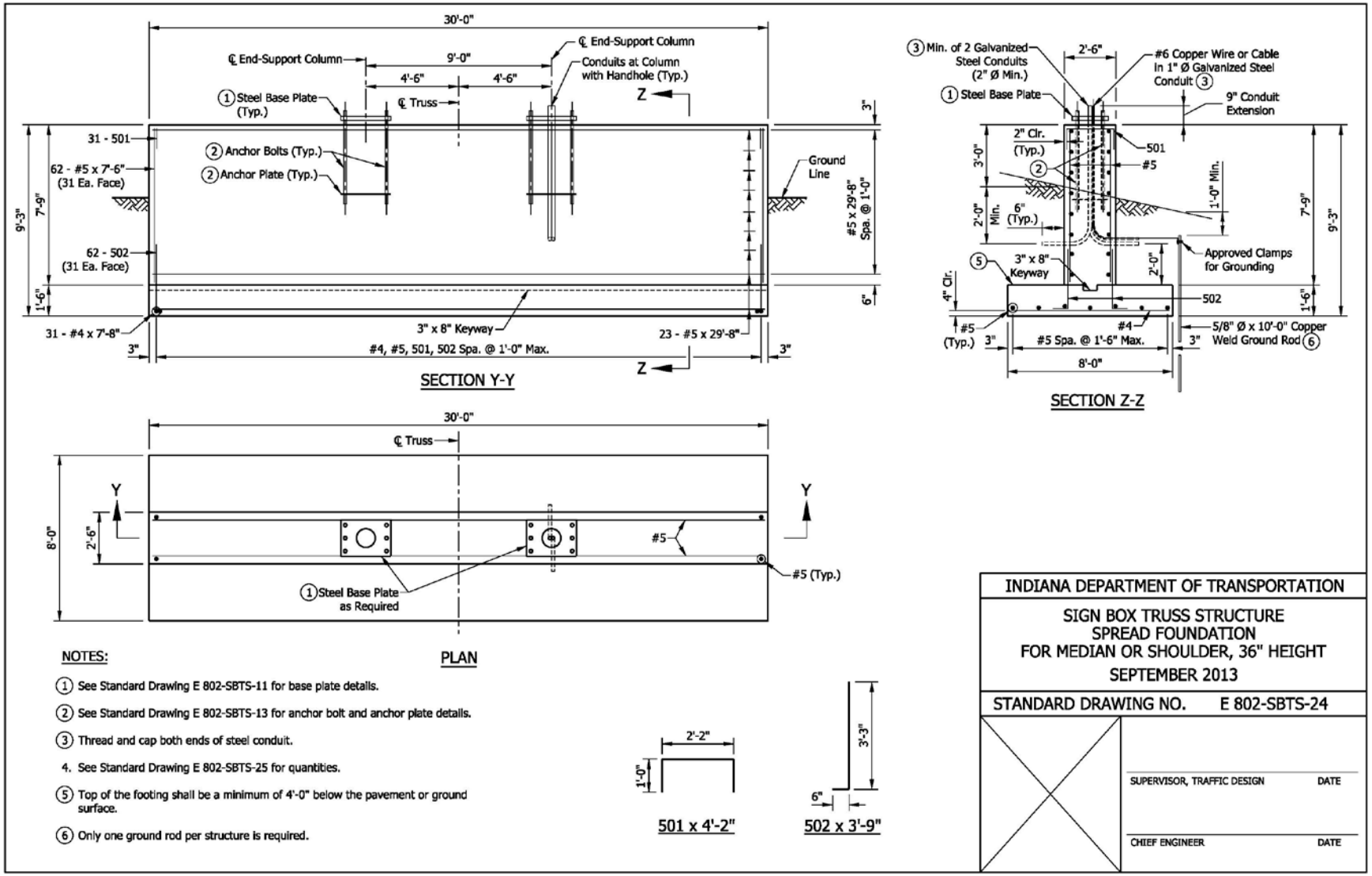

NOTES:

1. See Standard Drawing E 802-SBTS-11 for base plate details.
2. See Standard Drawing E 802-SBTS-13 for anchor bolt and anchor plate details.
3. Thread and cap both ends of steel conduit.
4. See Standard Drawing E 802-SBTS-25 for quantities.
5. Top of the footing shall be a minimum of 4'-0" below the pavement or ground surface.
6. Only one ground rod per structure is required.

REVISION TO STANDARD SPECIFICATIONS AND STANDARD DRAWINGS

PROPOSED NEW 802-SBTS-25 SIGN BOX TRUSS STRUCTURE (REVISED)

SPREAD FOUNDATION AT 33" CONCRETE BARRIER WALL			
EPOXY-COATED REINFORCING BARS			
MARK OR SIZE	NO. OF BARS	LENGTH	WEIGHT
501	31	4'-2"	
502	62	3'-9"	
#5	62	6'-6"	
#5	21	29'-8"	
Total #5			1447 LBS
#4	31	7'-8"	
Total #4			159 LBS
Total Epoxy-Coated Reinforcing Bars			1606 LBS
CONCRETE, CLASS A			
Total Concrete, Class A			35.8 CYS
MISCELLANEOUS			
Surface Seal			27.6 SYS

SPREAD FOUNDATION AT 45" CONCRETE BARRIER WALL			
EPOXY-COATED REINFORCING BARS			
MARK OR SIZE	NO. OF BARS	LENGTH	WEIGHT
501	31	4'-2"	
502	62	3'-9"	
#5	62	7'-6"	
#5	23	29'-8"	
Total #5			1574 LBS
#4	31	7'-8"	
Total #4			159 LBS
Total Epoxy-Coated Reinforcing Bars			1733 LBS
CONCRETE, CLASS A			
Total Concrete, Class A			37.6 CYS
MISCELLANEOUS			
Surface Seal			34.3 SYS

SPREAD FOUNDATION FOR MEDIAN OR SHOULDER, 36" HEIGHT			
EPOXY-COATED REINFORCING BARS			
MARK OR SIZE	NO. OF BARS	LENGTH	WEIGHT
501	31	4'-2"	
502	62	3'-9"	
#5	62	7'-6"	
#5	23	29'-8"	
Total #5			1574 LBS
#4	31	7'-8"	
Total #4			159 LBS
Total Epoxy-Coated Reinforcing Bars			1733 LBS
CONCRETE, CLASS A			
Total Concrete, Class A			34.9 CYS
MISCELLANEOUS			
Surface Seal			28.3 SYS

INDIANA DEPARTMENT OF TRANSPORTATION

SIGN BOX TRUSS STRUCTURE
SPREAD FOUNDATIONS
QUANTITIES

SEPTEMBER 2013

STANDARD DRAWING NO. E 802-SBTS-25

SUPERVISOR, TRAFFIC DESIGN DATE

CHIEF ENGINEER DATE

REVISION TO STANDARD SPECIFICATIONS AND STANDARD DRAWINGS

PROPOSED NEW 802-SBTS-26 SIGN BOX TRUSS STRUCTURE

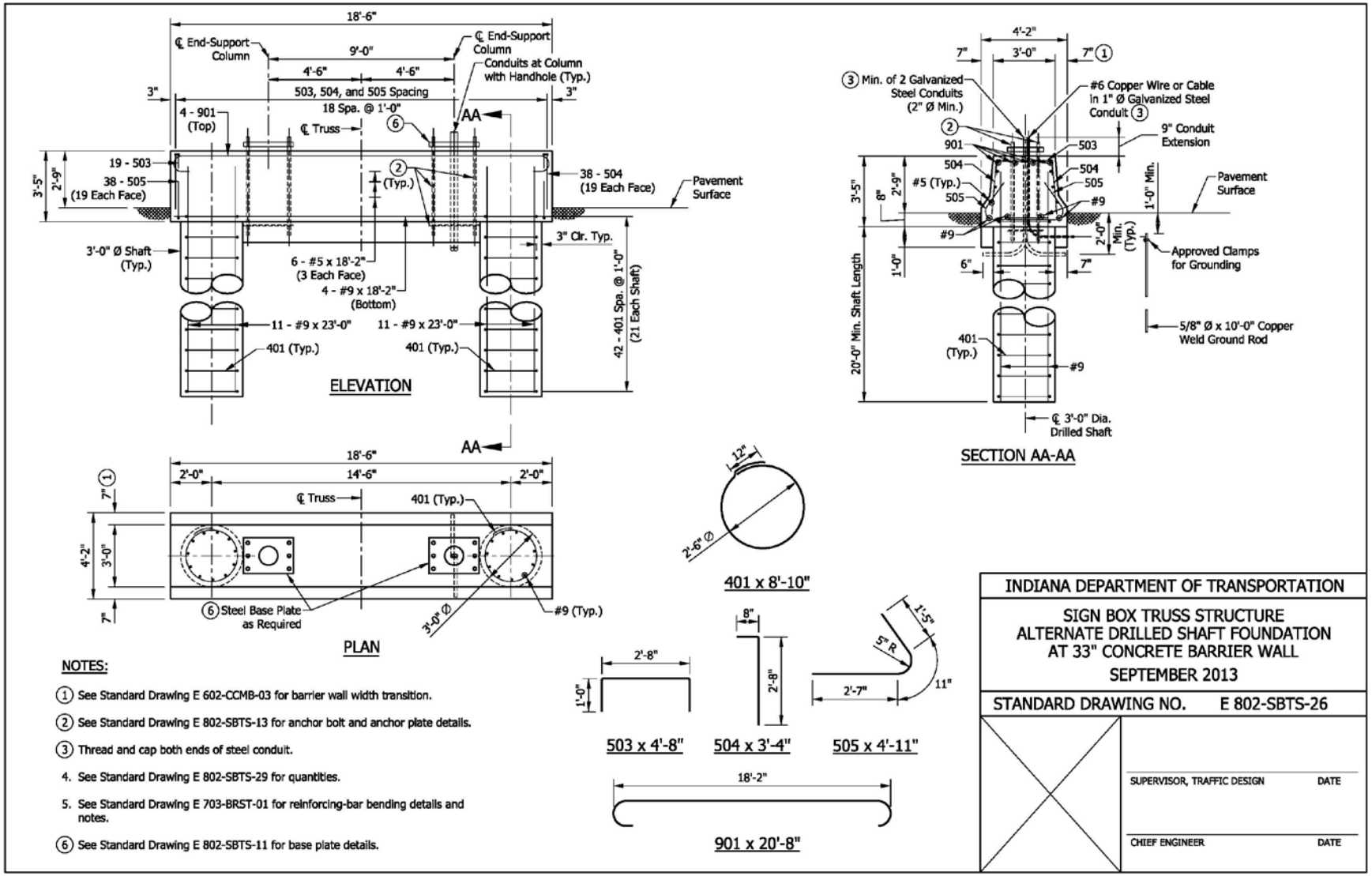

NOTES:

1. See Standard Drawing E 602-CCMB-03 for barrier wall width transition.
2. See Standard Drawing E 802-SBTS-13 for anchor bolt and anchor plate details.
3. Thread and cap both ends of steel conduit.
4. See Standard Drawing E 802-SBTS-29 for quantities.
5. See Standard Drawing E 703-BRST-01 for reinforcing-bar bending details and notes.
6. See Standard Drawing E 802-SBTS-11 for base plate details.

REVISION TO STANDARD SPECIFICATIONS AND STANDARD DRAWINGS

PROPOSED NEW 802-SBTS-27 SIGN BOX TRUSS STRUCTURE

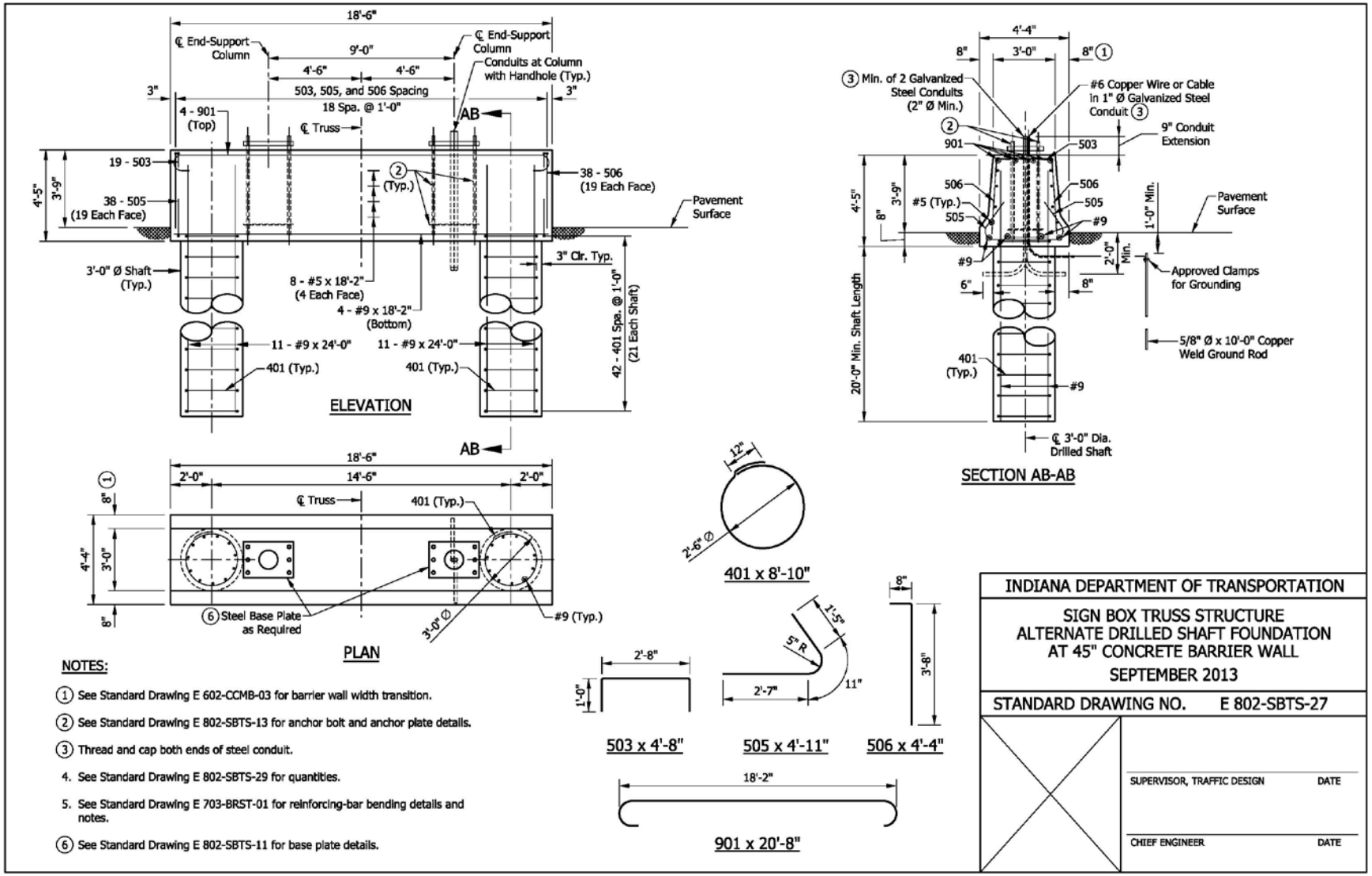

REVISION TO STANDARD SPECIFICATIONS AND STANDARD DRAWINGS

PROPOSED NEW 802-SBTS-28 SIGN BOX TRUSS STRUCTURE

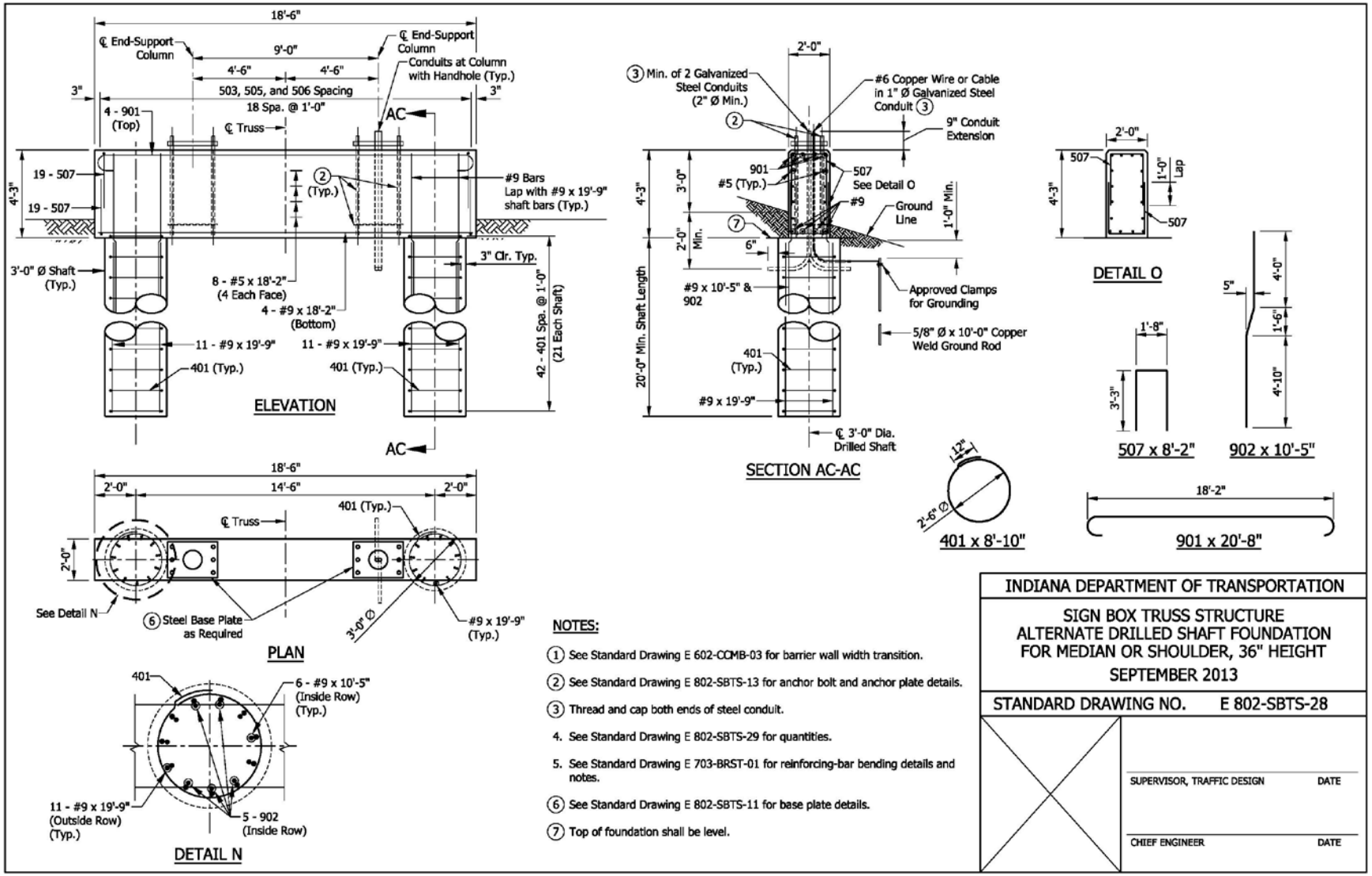

NOTES:

1. See Standard Drawing E 602-CCMB-03 for barrier wall width transition.
2. See Standard Drawing E 802-SBTS-13 for anchor bolt and anchor plate details.
3. Thread and cap both ends of steel conduit.
4. See Standard Drawing E 802-SBTS-29 for quantities.
5. See Standard Drawing E 703-BRST-01 for reinforcing-bar bending details and notes.
6. See Standard Drawing E 802-SBTS-11 for base plate details.
7. Top of foundation shall be level.

INDIANA DEPARTMENT OF TRANSPORTATION

SIGN BOX TRUSS STRUCTURE
ALTERNATE DRILLED SHAFT FOUNDATION
FOR MEDIAN OR SHOULDER, 36" HEIGHT
SEPTEMBER 2013

STANDARD DRAWING NO. E 802-SBTS-28

SUPERVISOR, TRAFFIC DESIGN DATE

CHIEF ENGINEER DATE

REVISION TO STANDARD SPECIFICATIONS AND STANDARD DRAWINGS

PROPOSED NEW 802-SBTS-29 SIGN BOX TRUSS STRUCTURE

ALTERNATE DRILLED SHAFT FOUNDATION AT 33" CONCRETE BARRIER WALL			
EPOXY-COATED REINFORCING BARS			
MARK OR SIZE	NO. OF BARS	LENGTH	WEIGHT
901	4	20'-8"	
#9	4	18'-2"	
#9	22	23'-0"	
Total #9			2249 LBS
503	19	4'-8"	
504	38	3'-4"	
505	38	4'-11"	
#5	6	18'-2"	
Total #5			533 LBS
401	42	8'-10"	
Total #4			248 LBS
Total Epoxy-Coated Reinforcing Bars			3030 LBS
CONCRETE, CLASS A			
Total Concrete, Class A			20.0 CYS
MISCELLANEOUS			
Surface Seal			17.6 SYS

ALTERNATE DRILLED SHAFT FOUNDATION AT 45" CONCRETE BARRIER WALL			
EPOXY-COATED REINFORCING BARS			
MARK OR SIZE	NO. OF BARS	LENGTH	WEIGHT
901	4	20'-8"	
#9	4	18'-2"	
#9	22	24'-0"	
Total #9			2323 LBS
503	19	4'-8"	
505	38	4'-11"	
506	38	4'-4"	
#5	8	18'-2"	
Total #5			611 LBS
401	42	8'-10"	
Total #4			248 LBS
Total Epoxy-Coated Reinforcing Bars			3182 LBS
CONCRETE, CLASS A			
Total Concrete, Class A			20.8 CYS
MISCELLANEOUS			
Surface Seal			21.7 SYS

ALTERNATE DRILLED SHAFT FOUNDATION FOR MEDIAN OR SHOULDER, 36" HEIGHT			
EPOXY-COATED REINFORCING BARS			
MARK OR SIZE	NO. OF BARS	LENGTH	WEIGHT
901	4	20'-8"	
902	10	10'-5"	
#9	4	18'-2"	
#9	12	10'-5"	
#9	22	19'-9"	
Total #9			2785 LBS
507	38	8'-2"	
#5	8	18'-2"	
Total #5			475 LBS
401	42	8'-10"	
Total #4			248 LBS
Total Epoxy-Coated Reinforcing Bars			3508 LBS
CONCRETE, CLASS A			
Total Concrete, Class A			16.3 CYS
MISCELLANEOUS			
Surface Seal			21.6 SYS

INDIANA DEPARTMENT OF TRANSPORTATION

SIGN BOX TRUSS STRUCTURE
ALTERNATE DRILLED SHAFT FOUNDATIONS
QUANTITIES

SEPTEMBER 2013

STANDARD DRAWING NO. E 802-SBTS-29

SUPERVISOR, TRAFFIC DESIGN DATE

CHIEF ENGINEER DATE

REVISION TO STANDARD SPECIFICATIONS AND STANDARD DRAWINGS

PROPOSED NEW 802-SCLS-01 SIGN CANTILEVER STRUCTURE

INDEX

SHEET NO.	SUBJECT
1	Index
2	Double Arm Plan and Elevation
3	Double Arm Panel Dimensions and Member Sizes
4	Double Arm Connections, Weld Details, Chord End Plate Details, and Camber
5	Double Arm Connection to Column Details
6	Double Arm Column Top Cap and Cable J-Hook
7	Quadri-Chord Plan and Elevation
8	Quadri-Chord Panel Dimensions and Member Sizes
9	Quadri-Chord Connections, Weld Details, Chord End Plate Details, and Camber
10	Quadri-Chord Arm Connection (Lower) to Column and Wire Outlet Detail
11	Quadri-Chord Arm Connection (Top) to Column
12	Double Arm and Quadri-Chord Base Plate, Anchor Bolt, and Metal Skirt Details
13	Double Arm and Quadri-Chord Column Handhole and I.D. Tag Details
14	Structure Type A or B Foundation at 33" Concrete Barrier
15	Structure Type C, D, E, or F Foundation at 33" Concrete Barrier
16	Structure Type G, H, or I Foundation at 33" Concrete Barrier
17	Structure Type A or B Foundation at 45" Concrete Barrier
18	Structure Type C, D, E, or F Foundation at 45" Concrete Barrier
19	Structure Type G, H, or I Foundation at 45" Concrete Barrier
20	Structure Type A or B Foundation, 36" Height
21	Structure Type C, D, E, or F Foundation, 36" Height
22	Structure Type G, H, or I Foundation, 36" Height

INDIANA DEPARTMENT OF TRANSPORTATION

SIGN CANTILEVER STRUCTURE
DRAWING INDEX

SEPTEMBER 2013

STANDARD DRAWING NO. E 802-SCLS-01

SUPERVISOR, TRAFFIC DESIGN DATE

CHIEF ENGINEER DATE

REVISION TO STANDARD SPECIFICATIONS AND STANDARD DRAWINGS

PROPOSED NEW 802-SCLS-02 SIGN CANTILEVER STRUCTURE

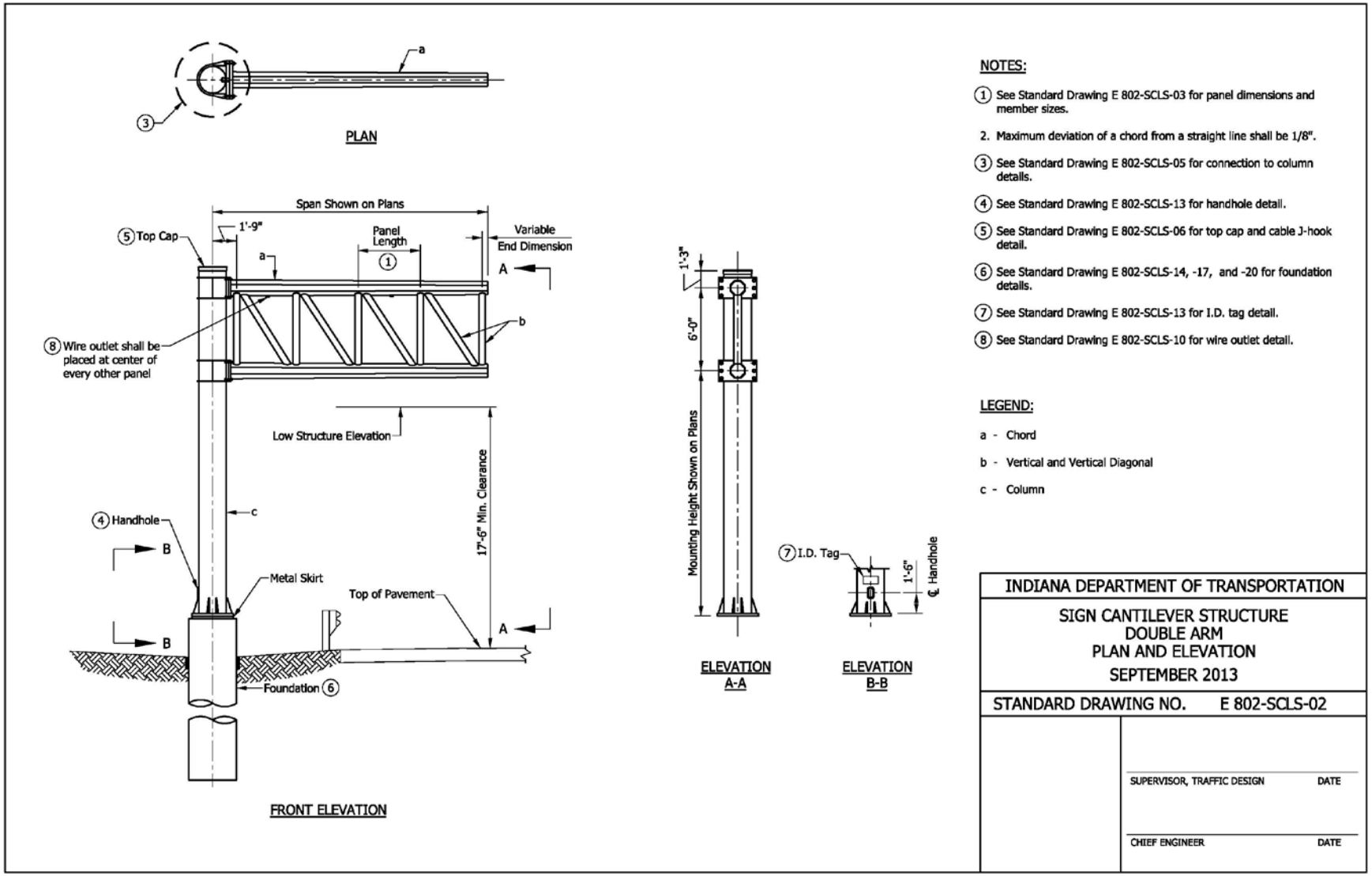

REVISION TO STANDARD SPECIFICATIONS AND STANDARD DRAWINGS

PROPOSED NEW 802-SCLS-03 SIGN CANTILEVER STRUCTURE

DOUBLE ARM PANEL DIMENSIONS			
SPAN	NO. OF PANELS	PANEL LENGTH	VARIABLE END DIMENSION
10'	2	4'-0"	0'-3"
11'	3	3'-0"	0'-3"
12'	3	3'-3"	0'-6"
13'	3	3'-6"	0'-9"
14'	3	4'-0"	0'-3"
15'	3	4'-3"	0'-6"
16'	4	3'-6"	0'-3"
17'	4	3'-9"	0'-3"
18'	4	4'-0"	0'-3"
19'	4	4'-3"	0'-3"
20'	4	4'-6"	0'-3"

NOTES:

1. All panels on the double arm shall be the same length. The minimum panel length is 3'-0" and the maximum is 4'-6".
2. See Standard Drawing E 802-SCLS-04 for connections, weld details, and required camber.
3. For base plate and anchor bolt details see Standard Drawing E 802-SCLS-12.
4. See Standard Drawings E 802-SCLS-14, -17, and -20 for foundation details.
5. All member diameters shown are outside diameters.

(6) Double arm chord shape shall be octagonal tubular with 0.14 in./ft. taper, maximum diameter shown in table.

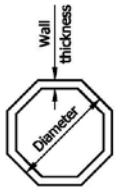

OCTAGON TUBULAR SHAPE

DOUBLE ARM MEMBER SIZES									
STR. TYPE	MAX SPAN (FT.)	MAX SIGN AREA (FT.)	MAX MOUNTING HEIGHT (FT.)	(6) CHORD a		VERTICAL/VERTICAL DIAGONAL b		COLUMN c	
				DIAMETER (IN.)	WALL THICK. (IN.)	DIAMETER (IN.)	WALL THICK. (IN.)	DIAMETER (IN.)	WALL THICK. (IN.)
A	10	180	24	7 5/8	0.500	4 1/2	0.337	18	0.750
B	15	280	24	10 3/4	0.593	5 9/16	0.500	20	0.812
C	20	380	24	14	0.593	6 5/8	0.719	24	0.968

INDIANA DEPARTMENT OF TRANSPORTATION

SIGN CANTILEVER STRUCTURE
DOUBLE ARM
PANEL DIMENSIONS AND MEMBER SIZES
SEPTEMBER 2013

STANDARD DRAWING NO. E 802-SCLS-03

SUPERVISOR, TRAFFIC DESIGN DATE

CHIEF ENGINEER DATE

REVISION TO STANDARD SPECIFICATIONS AND STANDARD DRAWINGS

PROPOSED NEW 802-SCLS-04 SIGN CANTILEVER STRUCTURE

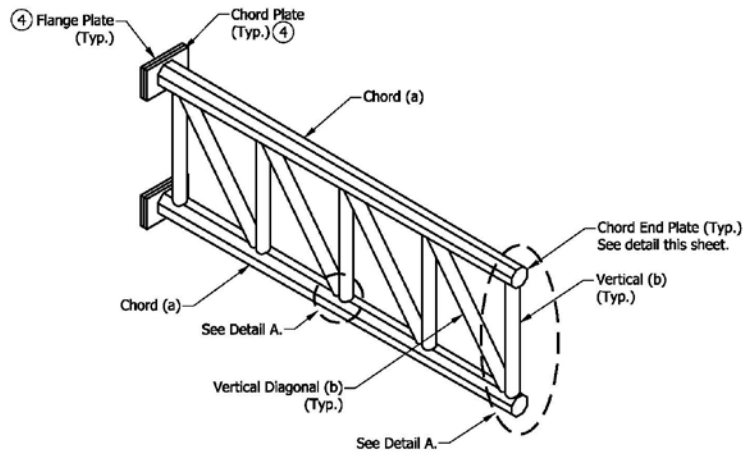

DOUBLE ARM

NOTES:

1. See Standard Drawing E 802-SCLS-03 for panel dimensions and member sizes.
2. Vertical diagonals shall be placed for minimum offset from the panel point such that the offset shall provide a 3/4" minimum to 1 1/2" maximum clearance between each diagonal and vertical member, and to provide clearance for U-bolt connections to signs.
3. For variable end dimension, see table of panel dimensions on Standard Drawing E 802-SCLS-03.
4. See Standard Drawing E 802-SCLS-05 for flange plate and chord plate details.

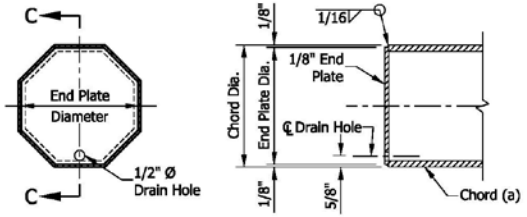

END VIEW SECTION C-C

CHORD END PLATE DETAILS

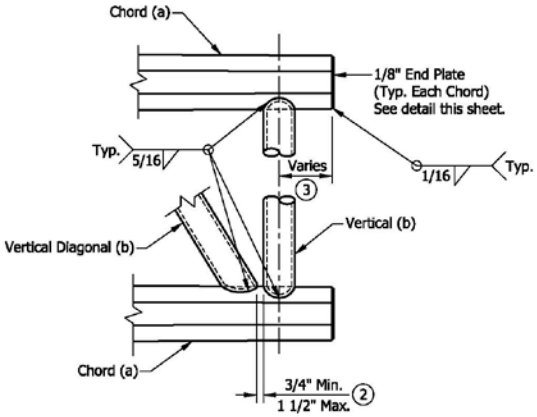

DETAIL A

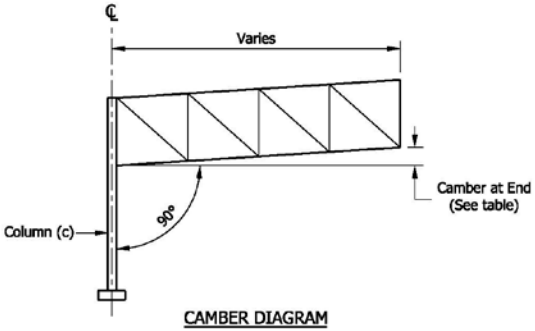

CAMBER DIAGRAM

DOUBLE ARM		
STR. TYPE	LENGTH	CAMBER AT END (IN.)
A	10'-0"	0.375
B	15'-0"	0.750
C	20-0"	1.000

INDIANA DEPARTMENT OF TRANSPORTATION

SIGN CANTILEVER STRUCTURE
DOUBLE ARM CONNECTIONS, WELD DETAILS,
CHORD END PLATE DETAILS, AND CAMBER
SEPTEMBER 2013

STANDARD DRAWING NO. E 802-SCLS-04

SUPERVISOR, TRAFFIC DESIGN DATE

CHIEF ENGINEER DATE

REVISION TO STANDARD SPECIFICATIONS AND STANDARD DRAWINGS

PROPOSED NEW 802-SCLS-05 SIGN CANTILEVER STRUCTURE

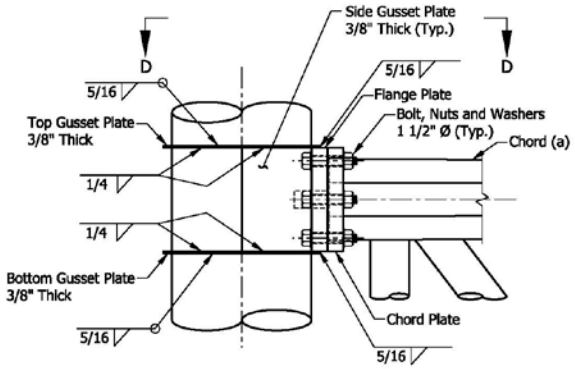

DOUBLE ARM TRUSS CONNECTION ELEVATION

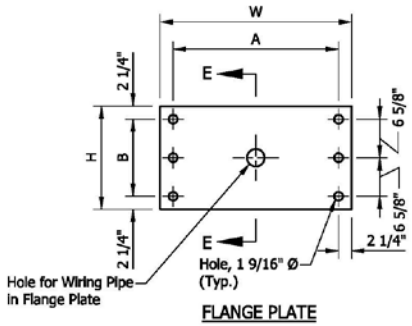

FLANGE PLATE

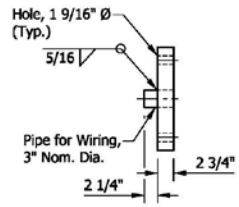

SECTION E-E

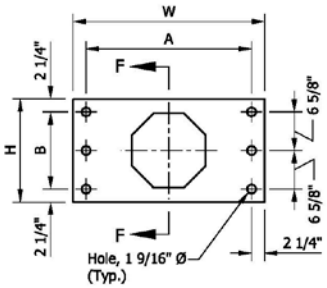

CHORD PLATE

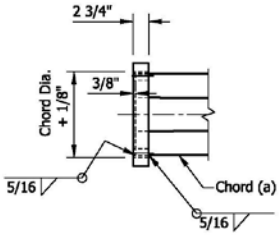

SECTION F-F

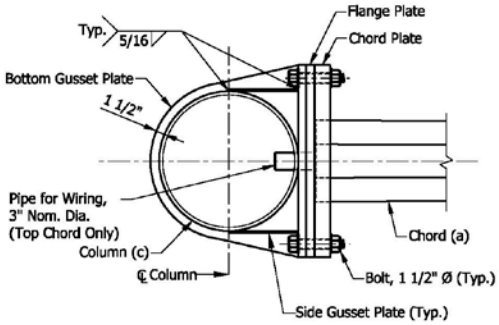

SECTION D-D

PLATE DIMENSIONS					
COLUMN DIAMETER	CHORD DIAMETER	W	H	A	B
18"	7 5/8"	2'-3"	1'-2"	1'-10 1/2"	9 1/2"
20"	10 3/4"	2'-5"	1'-5"	2'-0 1/2"	1'-0 1/2"
24"	14"	2'-9"	1'-6"	2'-4 1/2"	1'-1 1/2"

INDIANA DEPARTMENT OF TRANSPORTATION

SIGN CANTILEVER STRUCTURE
DOUBLE ARM
CONNECTION TO COLUMN DETAILS
SEPTEMBER 2013

STANDARD DRAWING NO. E 802-SCLS-05

SUPERVISOR, TRAFFIC DESIGN DATE

CHIEF ENGINEER DATE

REVISION TO STANDARD SPECIFICATIONS AND STANDARD DRAWINGS

PROPOSED NEW 802-SCLS-06 SIGN CANTILEVER STRUCTURE

NOTES:

1. J-hook shall consist of 3/8" dia. bars constructed as shown, and spot-welded to inside of the columns.
2. Cap bolts used to attach top cap of columns shall be located to miss J-hook.

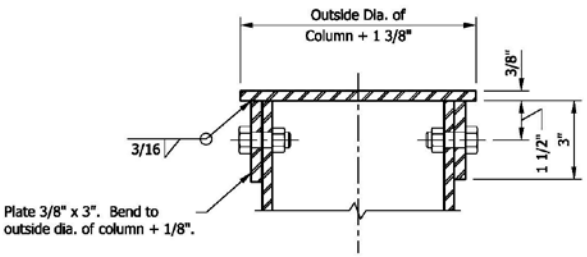

SECTION G-G

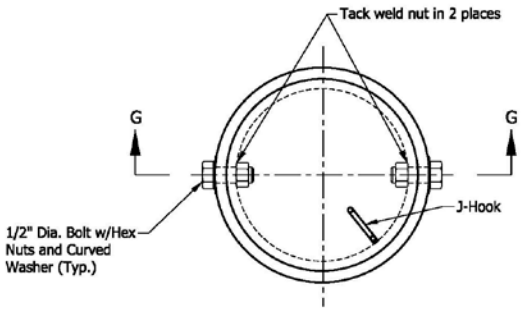

PLAN
TOP CAP - STEEL COLUMN

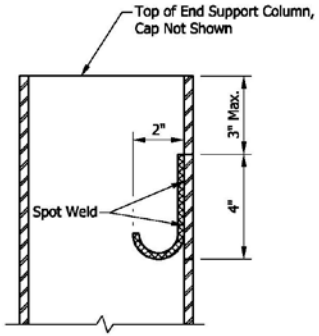

CABLE J-HOOK

INDIANA DEPARTMENT OF TRANSPORTATION	
SIGN CANTILEVER STRUCTURE DOUBLE ARM COLUMN TOP CAP AND CABLE J-HOOK SEPTEMBER 2013	
STANDARD DRAWING NO. E 802-SCLS-06	
	SUPERVISOR, TRAFFIC DESIGN DATE CHIEF ENGINEER DATE

REVISION TO STANDARD SPECIFICATIONS AND STANDARD DRAWINGS

PROPOSED NEW 802-SCLS-07 SIGN CANTILEVER STRUCTURE

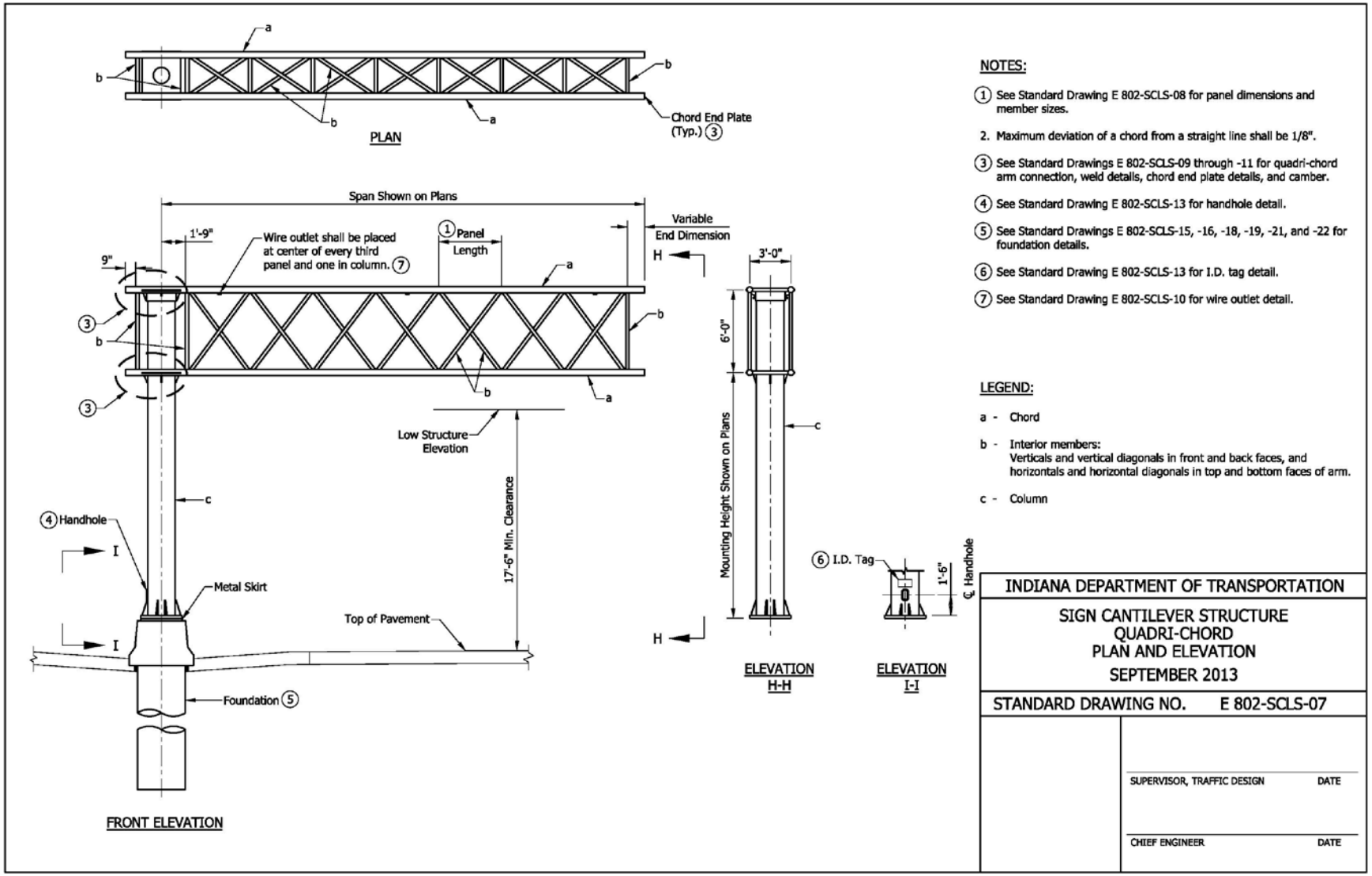

REVISION TO STANDARD SPECIFICATIONS AND STANDARD DRAWINGS

PROPOSED NEW 802-SCLS-08 SIGN CANTILEVER STRUCTURE

PANEL DIMENSIONS			
SPAN	NO. OF PANELS	PANEL LENGTH	VARIABLE END DIMENSION
21'	5	3'-9"	0'-6"
22'	5	3'-9"	1'-6"
23'	5	4'-0"	1'-3"
24'	5	4'-3"	1'-0"
25'	5	4'-6"	0'-9"
26'	6	3'-9"	1'-9"
27'	6	4'-0"	1'-3"
28'	6	4'-3"	0'-9"
29'	6	4'-3"	1'-9"
30'	6	4'-6"	1'-3"
31'	7	4'-0"	1'-3"
32'	7	4'-3"	0'-6"
33'	7	4'-3"	1'-6"
34'	7	4'-6"	0'-9"
35'	7	4'-6"	1'-9"

NOTES:

1. All panels in a structure shall be the same length. The minimum panel length is 3'-9" and the maximum is 4'-6".
2. See Standard Drawing E 802-SCLS-09 for connections, weld details, and required camber.
3. For base plate, anchor bolt, and metal skirt details see Standard Drawing E 802-SCLS-12.
4. All member diameters shown are outside diameters.

(5) Quadri-chord arm chord shape shall be circular with constant diameter.

QUADRI-CHORD MEMBER SIZES									
STR. TYPE	MAX SPAN (FT.)	MAX SIGN AREA (FT.)	MAX MOUNTING HEIGHT (FT.)	(5) CHORD a		VERT./HORIZ./DIAG. b		COLUMN c	
				DIAMETER (IN.)	WALL THICK. (IN.)	DIAMETER (IN.)	WALL THICK. (IN.)	DIAMETER (IN.)	WALL THICK. (IN.)
D	25	300	24	5 9/16	0.258	2 7/8	0.203	24	0.562
E	30	300	24	5 9/16	0.258	2 7/8	0.203	24	0.562
F	35	300	24	5 9/16	0.375	2 7/8	0.276	24	0.688
G	25	400	24	5 9/16	0.375	2 7/8	0.276	24	0.968
H	30	400	24	5 9/16	0.375	2 7/8	0.276	24	0.968
I	35	400	24	5 9/16	0.375	2 7/8	0.276	24	0.968

INDIANA DEPARTMENT OF TRANSPORTATION

SIGN CANTILEVER STRUCTURE
QUADRI-CHORD
PANEL DIMENSIONS AND MEMBER SIZES
SEPTEMBER 2013

STANDARD DRAWING NO. E 802-SCLS-08

SUPERVISOR, TRAFFIC DESIGN DATE

CHIEF ENGINEER DATE

REVISION TO STANDARD SPECIFICATIONS AND STANDARD DRAWINGS

PROPOSED NEW 802-SCLS-09 SIGN CANTILEVER STRUCTURE

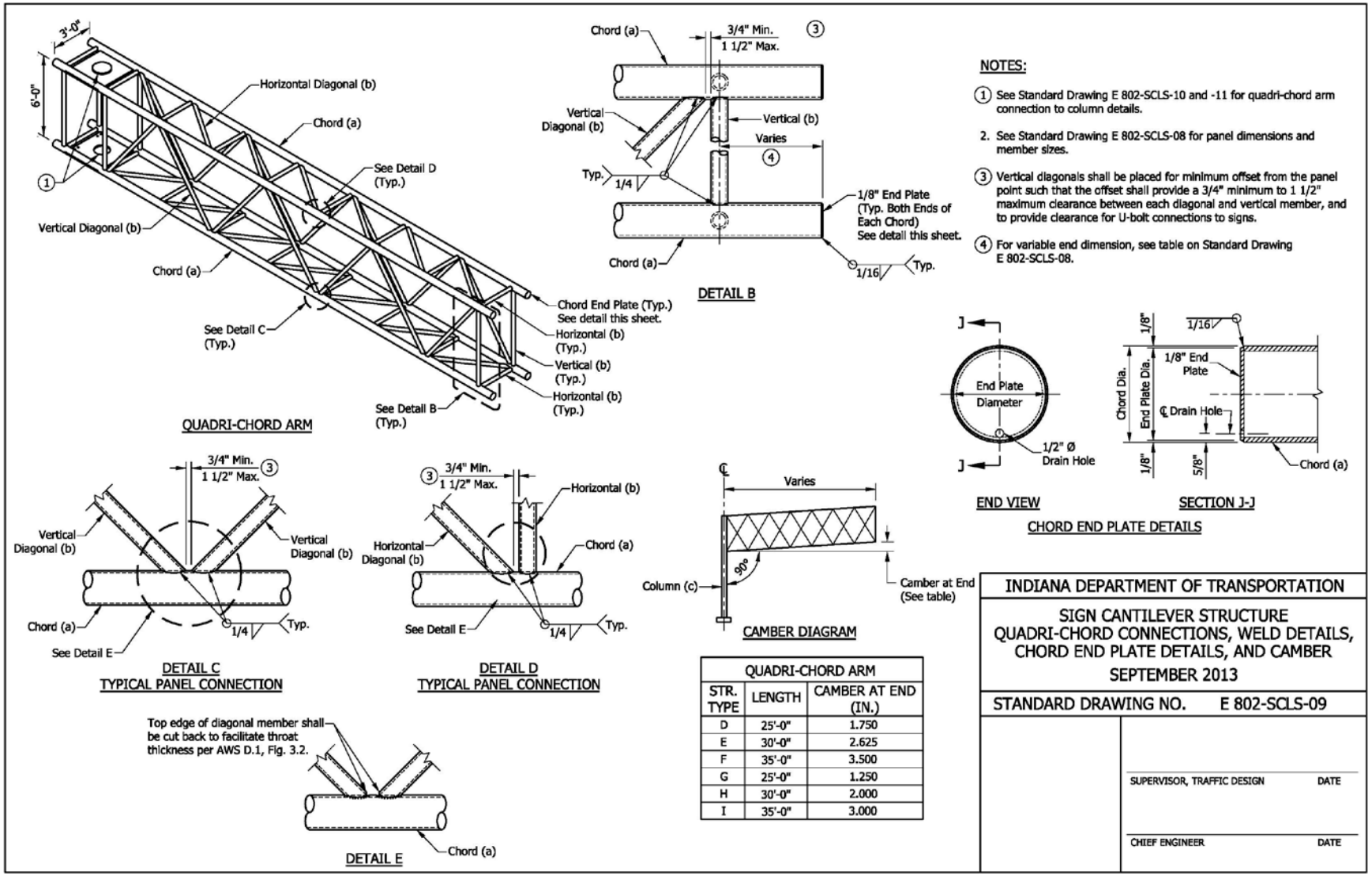

QUADRI-CHORD ARM		
STR. TYPE	LENGTH	CAMBER AT END (IN.)
D	25'-0"	1.750
E	30'-0"	2.625
F	35'-0"	3.500
G	25'-0"	1.250
H	30'-0"	2.000
I	35'-0"	3.000

REVISION TO STANDARD SPECIFICATIONS AND STANDARD DRAWINGS

PROPOSED NEW 802-SCLS-10 SIGN CANTILEVER STRUCTURE

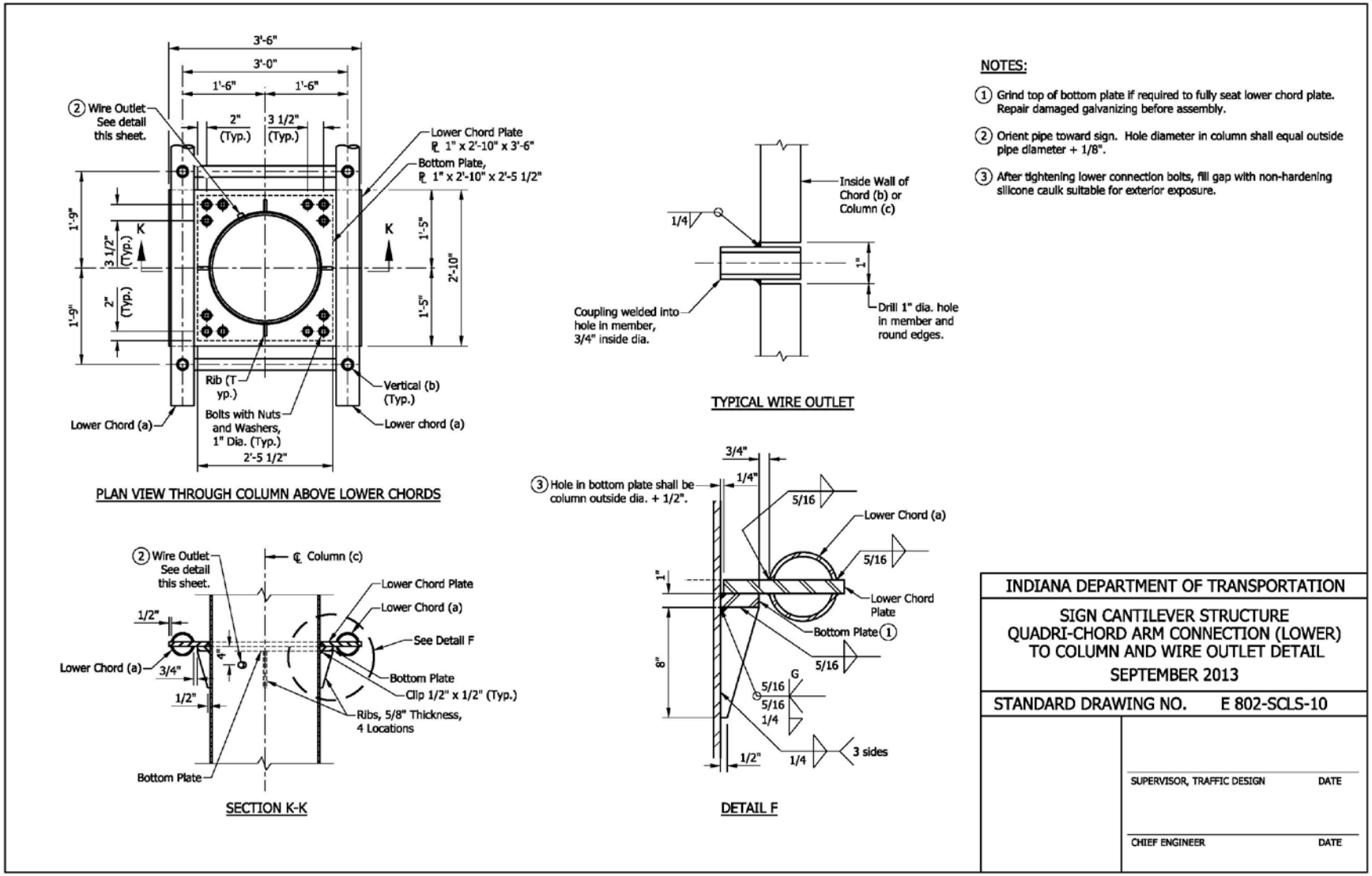

REVISION TO STANDARD SPECIFICATIONS AND STANDARD DRAWINGS

PROPOSED NEW 802-SCLS-11 SIGN CANTILEVER STRUCTURE

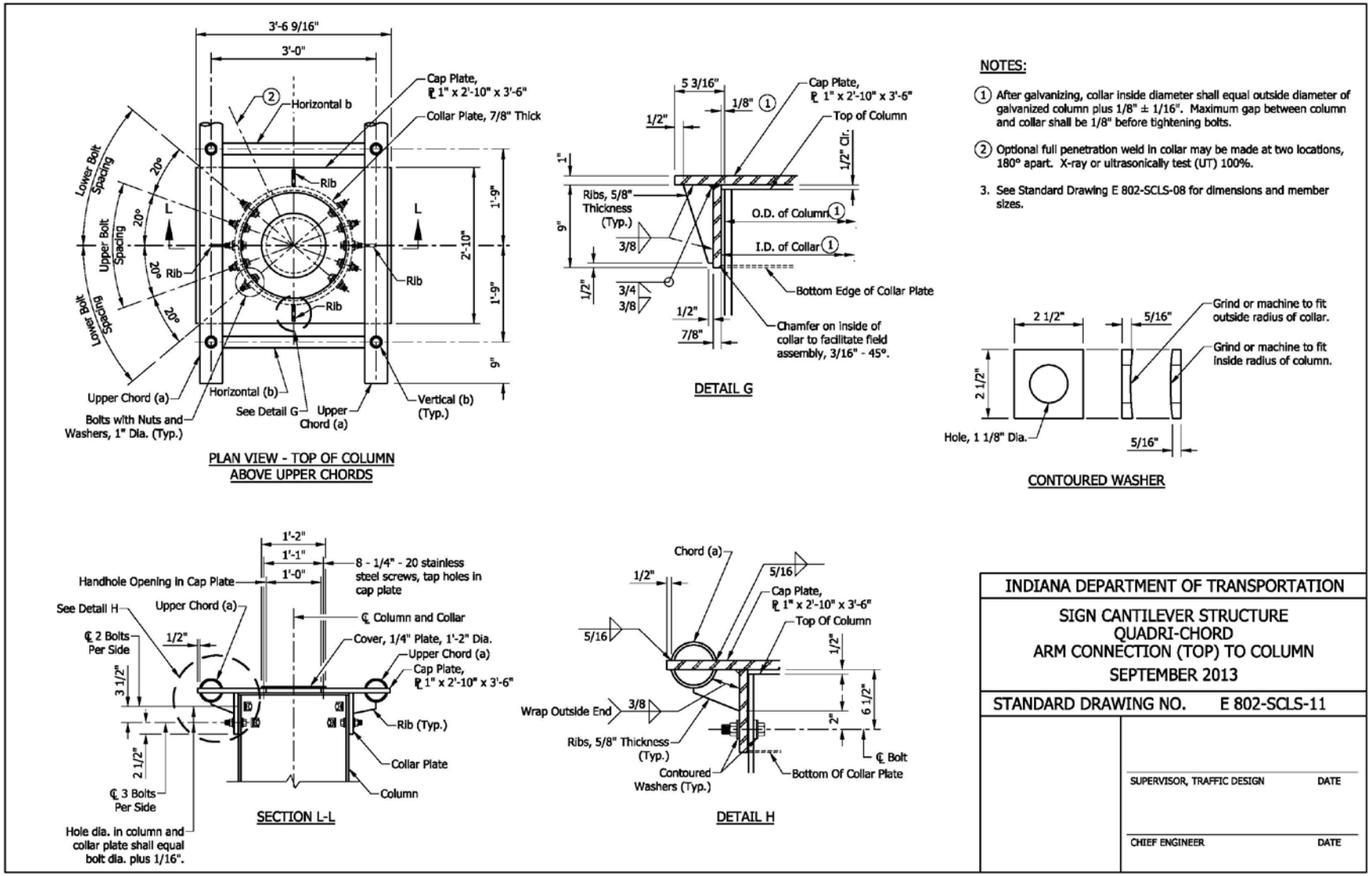

REVISION TO STANDARD SPECIFICATIONS AND STANDARD DRAWINGS

PROPOSED NEW 802-SCLS-12 SIGN CANTILEVER STRUCTURE

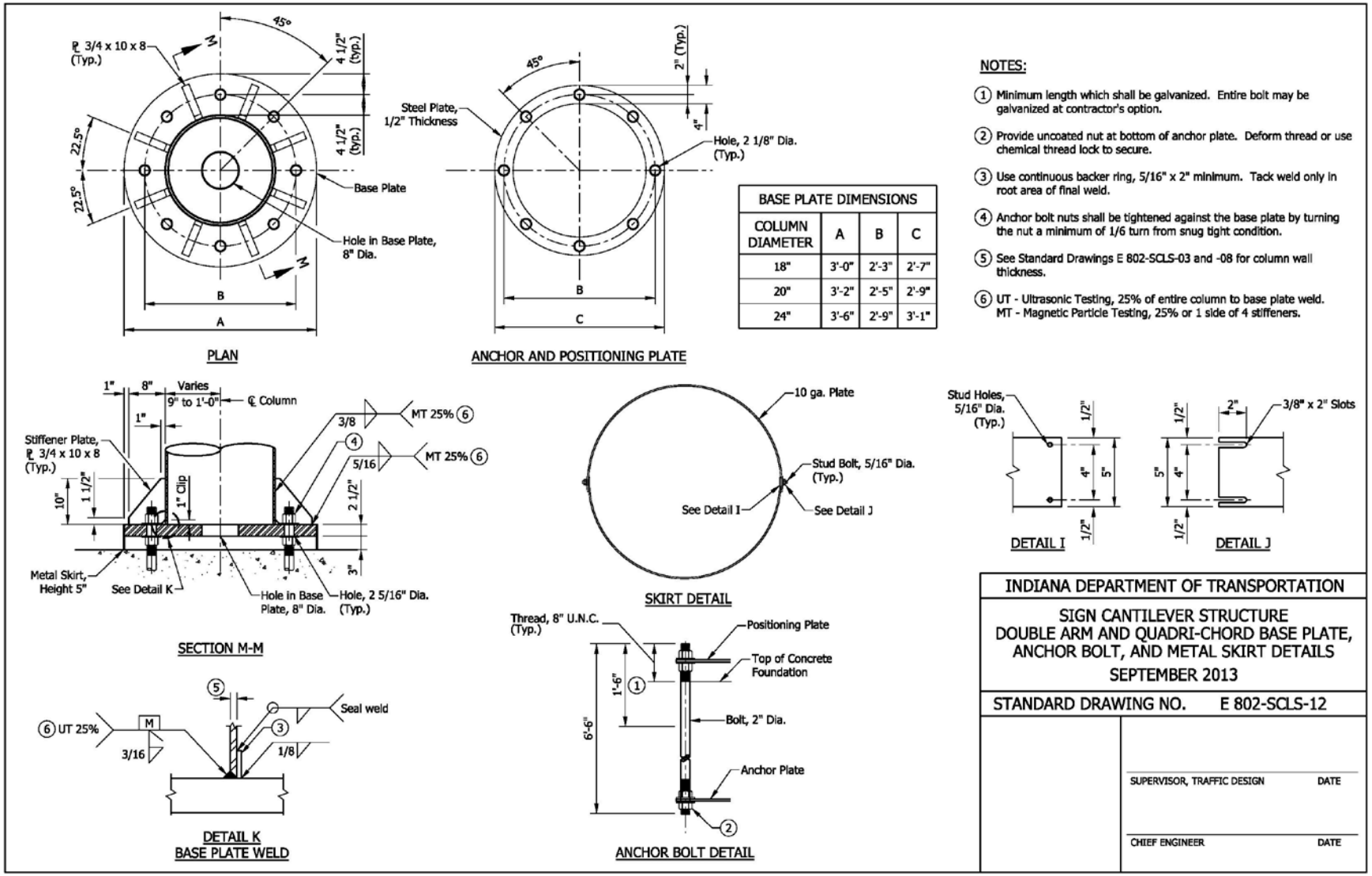

NOTES:

1. Minimum length which shall be galvanized. Entire bolt may be galvanized at contractor's option.
2. Provide uncoated nut at bottom of anchor plate. Deform thread or use chemical thread lock to secure.
3. Use continuous backer ring, 5/16" x 2" minimum. Tack weld only in root area of final weld.
4. Anchor bolt nuts shall be tightened against the base plate by turning the nut a minimum of 1/6 turn from snug tight condition.
5. See Standard Drawings E 802-SCLS-03 and -08 for column wall thickness.
6. UT - Ultrasonic Testing, 25% of entire column to base plate weld. MT - Magnetic Particle Testing, 25% or 1 side of 4 stiffeners.

BASE PLATE DIMENSIONS

COLUMN DIAMETER	A	B	C
18"	3'-0"	2'-3"	2'-7"
20"	3'-2"	2'-5"	2'-9"
24"	3'-6"	2'-9"	3'-1"

REVISION TO STANDARD SPECIFICATIONS AND STANDARD DRAWINGS

PROPOSED NEW 802-SCLS-13 SIGN CANTILEVER STRUCTURE (REVISED)

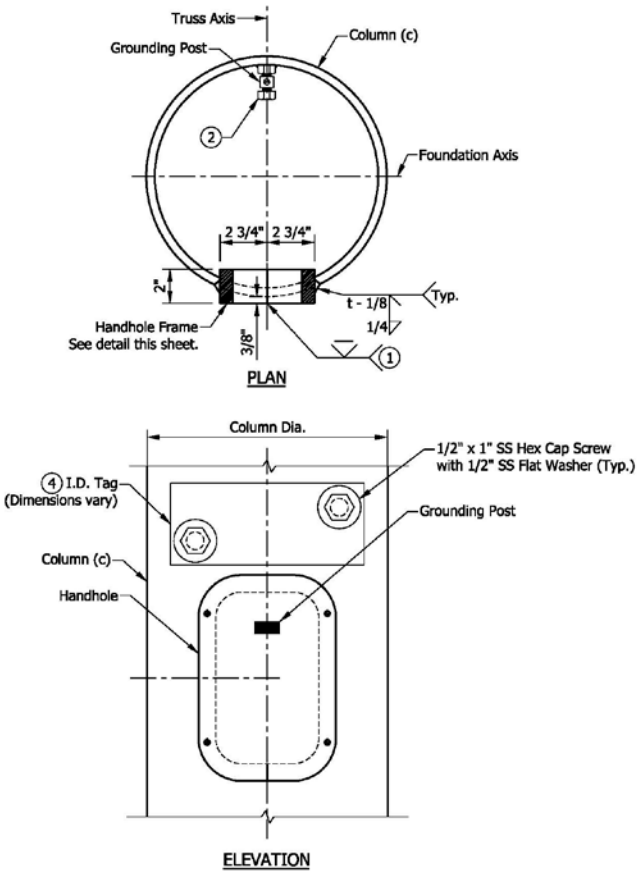

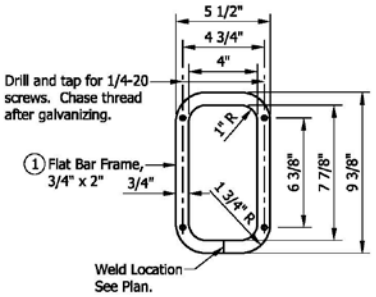

NOTES:

1. In lieu of fabricated handhole frame as shown, frame may be cut from 2" plate with rolling direction vertical.
2. See Standard Drawing E 802-SNWR-03 for grounding post details. Grounding post shall be placed on far side of support directly opposite center of handhole.
3. See Standard Drawings E 802-SCLS-02 and -07 for handhole locations.
4. I.D. tag is a 1/8" stainless steel plate with the following information stamped in 1/2" black letters:

Manufacturer _____, Drawing/Order #_____
Contract #_____, Structure Type _____
Fabrication Date _____, Arm Length _____
Pole Mounting Height _____

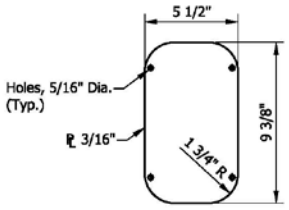

INDIANA DEPARTMENT OF TRANSPORTATION	
SIGN CANTILEVER STRUCTURE DOUBLE ARM AND QUADRI-CHORD COLUMN HANDHOLE AND I.D. TAG DETAILS SEPTEMBER 2013	
STANDARD DRAWING NO. E 802-SCLS-13	
	SUPERVISOR, TRAFFIC DESIGN DATE CHIEF ENGINEER DATE

REVISION TO STANDARD SPECIFICATIONS AND STANDARD DRAWINGS

PROPOSED NEW 802-SCLS-14 SIGN CANTILEVER STRUCTURE

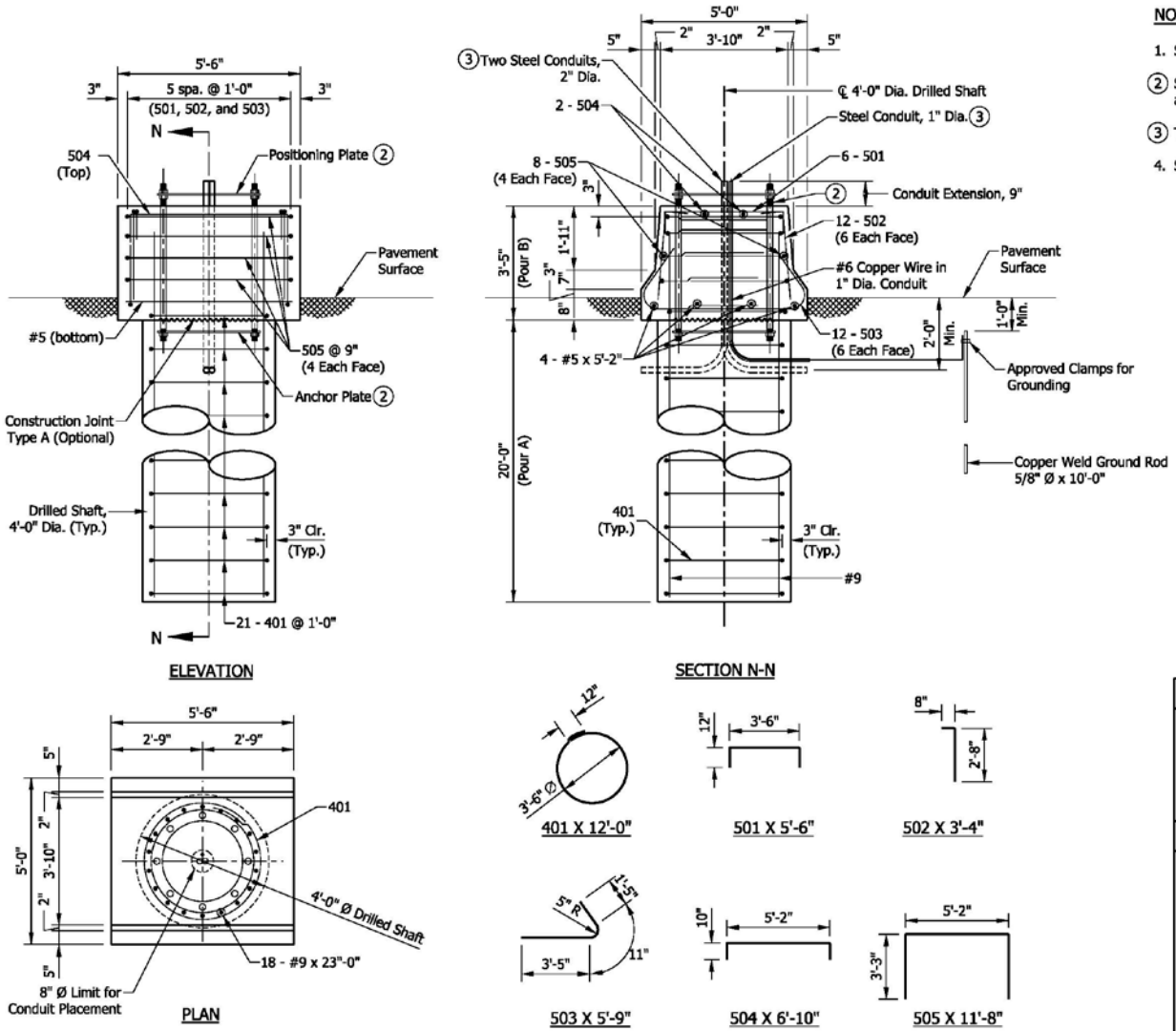

NOTES:

1. See Standard Drawing E 602-CCMB-03 for barrier wall width transition.
2. See Standard Drawing E 802-SCLS-12 for anchor and positioning plate and anchor bolt details.
3. Thread and cap both ends of steel conduit.
4. Surface seal top and sides of barrier railing to the pavement surface.

BILL OF MATERIALS			
EPOXY-COATED REINFORCING BARS			
MARK OR SIZE	NO. OF BARS	LENGTH	WEIGHT
#9	18	23'-0"	
Total #9			1408 LBS
501	6	5'-6"	
502	12	3'-4"	
503	12	5'-9"	
504	2	6'-10"	
505	8	11'-8"	
#5	4	5'-2"	
Total #5			281 LBS
401	21	12'-0"	
Total #4			168 LBS
Total Epoxy-Coated Reinforcing Bars			1857 LBS
CONCRETE, CLASS A			
Pour A			9.3 CYS
Pour B			3.0 CYS
Total Concrete, Class A			12.3 CYS
MISCELLANEOUS			
Surface Seal			5.9 SYS

INDIANA DEPARTMENT OF TRANSPORTATION

SIGN CANTILEVER STRUCTURE TYPE A OR B
FOUNDATION AT 33" CONCRETE BARRIER

SEPTEMBER 2013

STANDARD DRAWING NO. E 802-SCLS-14

SUPERVISOR, TRAFFIC DESIGN DATE

CHIEF ENGINEER DATE

REVISION TO STANDARD SPECIFICATIONS AND STANDARD DRAWINGS

PROPOSED NEW 802-SCLS-15 SIGN CANTILEVER STRUCTURE

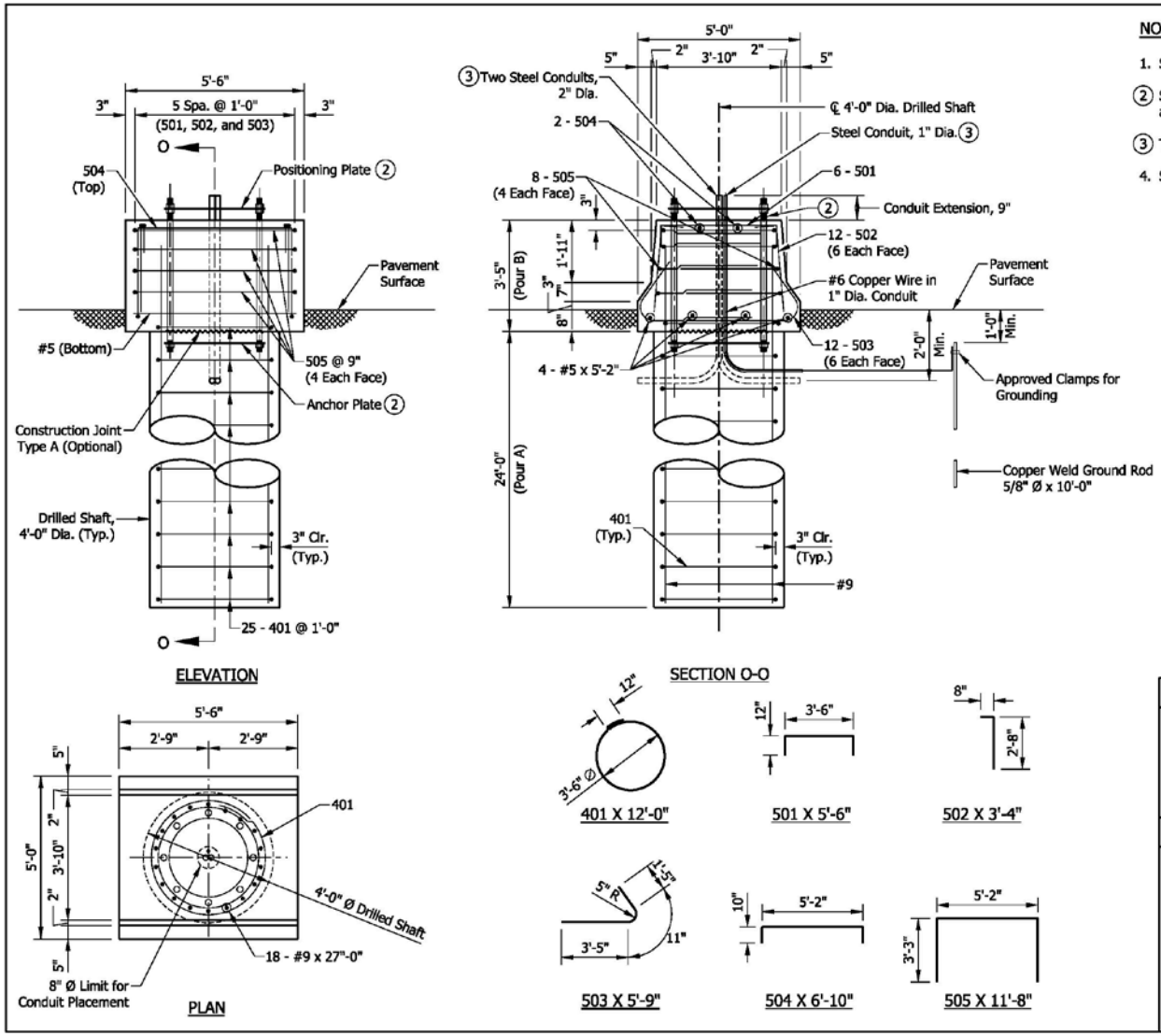

NOTES:

1. See Standard Drawing E 602-CCMB-03 for barrier wall width transition.
2. See Standard Drawing E 802-SCLS-12 for anchor and positioning plate and anchor bolt details.
3. Thread and cap both ends of steel conduit.
4. Surface seal top and sides of barrier railing to the pavement surface.

BILL OF MATERIALS			
EPOXY-COATED REINFORCING BARS			
MARK OR SIZE	NO. OF BARS	LENGTH	WEIGHT
#9	18	27'-0"	
Total #9			1652 LBS
501	6	5'-6"	
502	12	3'-4"	
503	12	5'-9"	
504	2	6'-10"	
505	8	11'-8"	
#5	4	5'-2"	
Total #5			281 LBS
401	25	12'-0"	
Total #4			200 LBS
Total Epoxy-Coated Reinforcing Bars			2133 LBS
CONCRETE, CLASS A			
Pour A			11.2 CYS
Pour B			3.0 CYS
Total Concrete, Class A			14.2 CYS
MISCELLANEOUS			
Surface Seal			5.9 SYS

INDIANA DEPARTMENT OF TRANSPORTATION

SIGN CANTILEVER STRUCTURE TYPE C, D, E, OR F
FOUNDATION AT 33" CONCRETE BARRIER

SEPTEMBER 2013

STANDARD DRAWING NO. E 802-SCLS-15

SUPERVISOR, TRAFFIC DESIGN DATE

CHIEF ENGINEER DATE

REVISION TO STANDARD SPECIFICATIONS AND STANDARD DRAWINGS

PROPOSED NEW 802-SCLS-16 SIGN CANTILEVER STRUCTURE

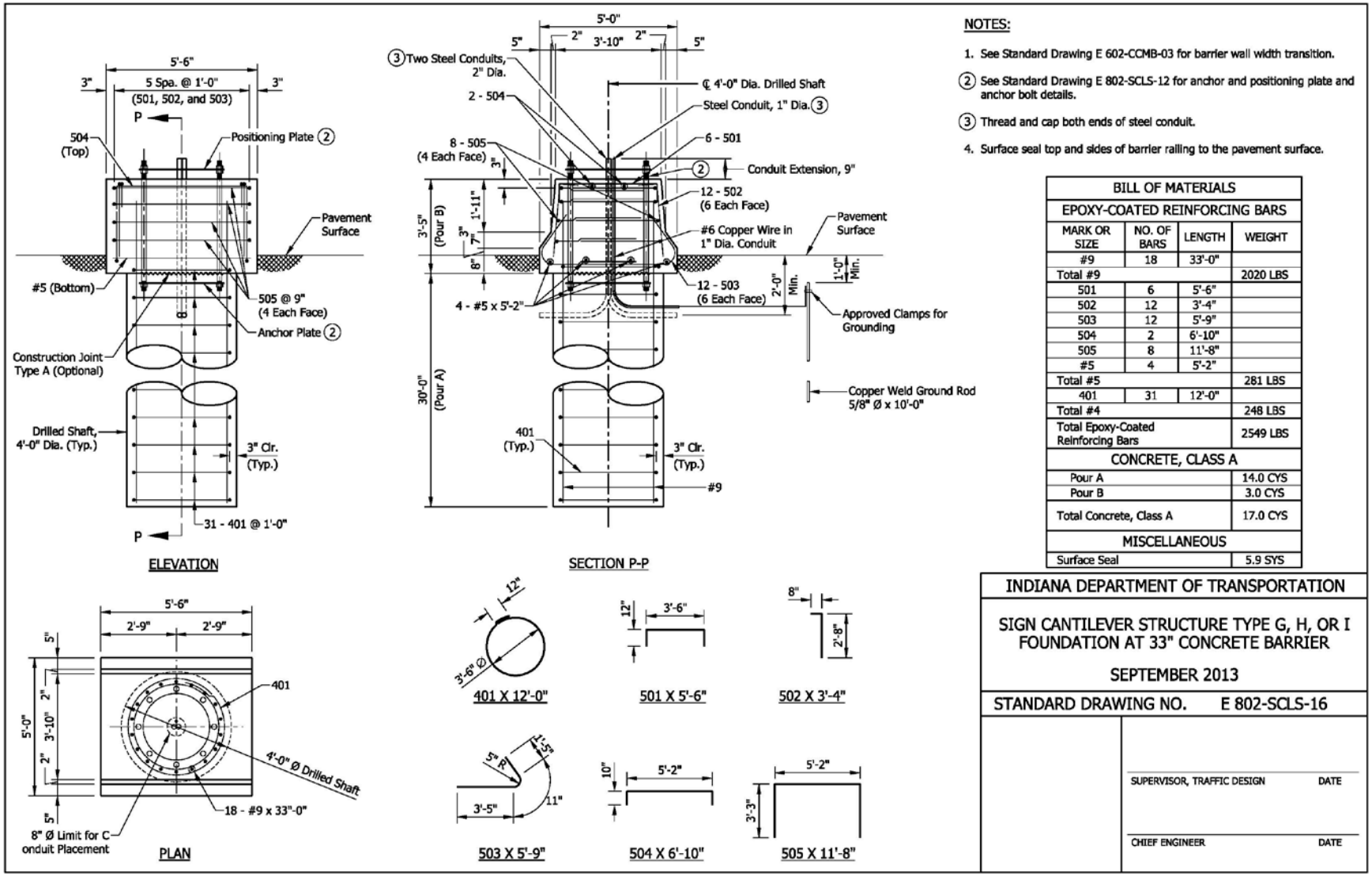

NOTES:

1. See Standard Drawing E 602-CCMB-03 for barrier wall width transition.
2. See Standard Drawing E 802-SCLS-12 for anchor and positioning plate and anchor bolt details.
3. Thread and cap both ends of steel conduit.
4. Surface seal top and sides of barrier railing to the pavement surface.

BILL OF MATERIALS			
EPOXY-COATED REINFORCING BARS			
MARK OR SIZE	NO. OF BARS	LENGTH	WEIGHT
#9	18	33'-0"	
Total #9			2020 LBS
501	6	5'-6"	
502	12	3'-4"	
503	12	5'-9"	
504	2	6'-10"	
505	8	11'-8"	
#5	4	5'-2"	
Total #5			281 LBS
401	31	12'-0"	
Total #4			248 LBS
Total Epoxy-Coated Reinforcing Bars			2549 LBS
CONCRETE, CLASS A			
Pour A			14.0 CYS
Pour B			3.0 CYS
Total Concrete, Class A			17.0 CYS
MISCELLANEOUS			
Surface Seal			5.9 SYS

INDIANA DEPARTMENT OF TRANSPORTATION

SIGN CANTILEVER STRUCTURE TYPE G, H, OR I
FOUNDATION AT 33" CONCRETE BARRIER

SEPTEMBER 2013

STANDARD DRAWING NO. E 802-SCLS-16

SUPERVISOR, TRAFFIC DESIGN DATE

CHIEF ENGINEER DATE

REVISION TO STANDARD SPECIFICATIONS AND STANDARD DRAWINGS

PROPOSED NEW 802-SCLS-17 SIGN CANTILEVER STRUCTURE

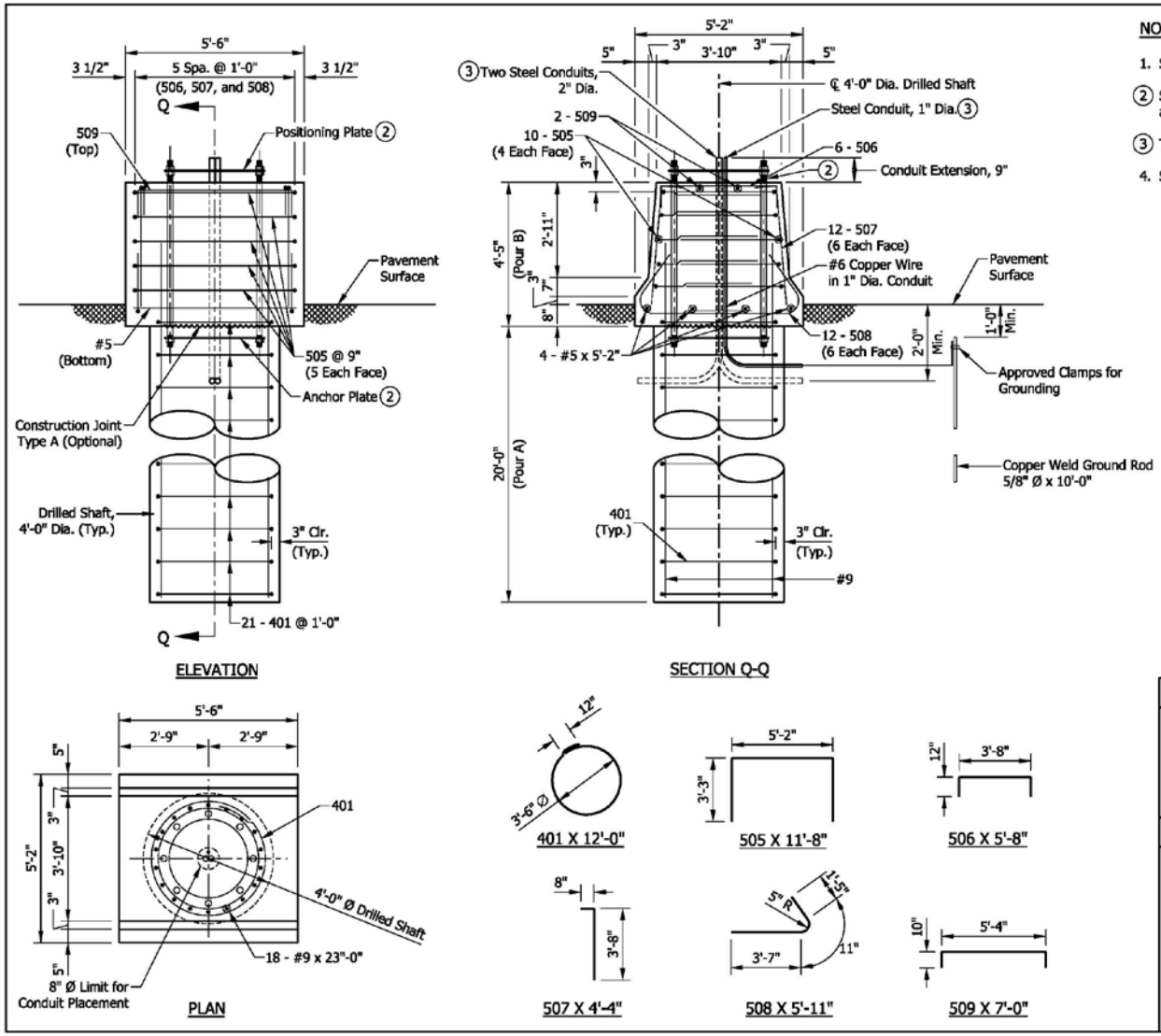

NOTES:

1. See Standard Drawing E 602-CCMB-03 for barrier wall width transition.
2. See Standard Drawing E 802-SCLS-12 for anchor and positioning plate and anchor bolt details.
3. Thread and cap both ends of steel conduit.
4. Surface seal top and sides of barrier railing to the pavement surface.

BILL OF MATERIALS			
EPOXY-COATED REINFORCING BARS			
MARK OR SIZE	NO. OF BARS	LENGTH	WEIGHT
#9	18	23'-0"	
Total #9			1408 LBS
505	10	11'-8"	
506	6	5'-8"	
507	12	4'-4"	
508	12	5'-11"	
509	2	7'-0"	
#5	4	5'-2"	
Total #5			322 LBS
401	21	12'-0"	
Total #4			168 LBS
Total Epoxy-Coated Reinforcing Bars			1898 LBS
CONCRETE, CLASS A			
Pour A			9.3 CYS
Pour B			4.0 CYS
Total Concrete, Class A			13.3 CYS
MISCELLANEOUS			
Surface Seal			7.1 SYS

INDIANA DEPARTMENT OF TRANSPORTATION

SIGN CANTILEVER STRUCTURE TYPE A OR B
FOUNDATION AT 45" CONCRETE BARRIER

SEPTEMBER 2013

STANDARD DRAWING NO. E 802-SCLS-17

SUPERVISOR, TRAFFIC DESIGN DATE

CHIEF ENGINEER DATE

REVISION TO STANDARD SPECIFICATIONS AND STANDARD DRAWINGS

PROPOSED NEW 802-SCLS-18 SIGN CANTILEVER STRUCTURE

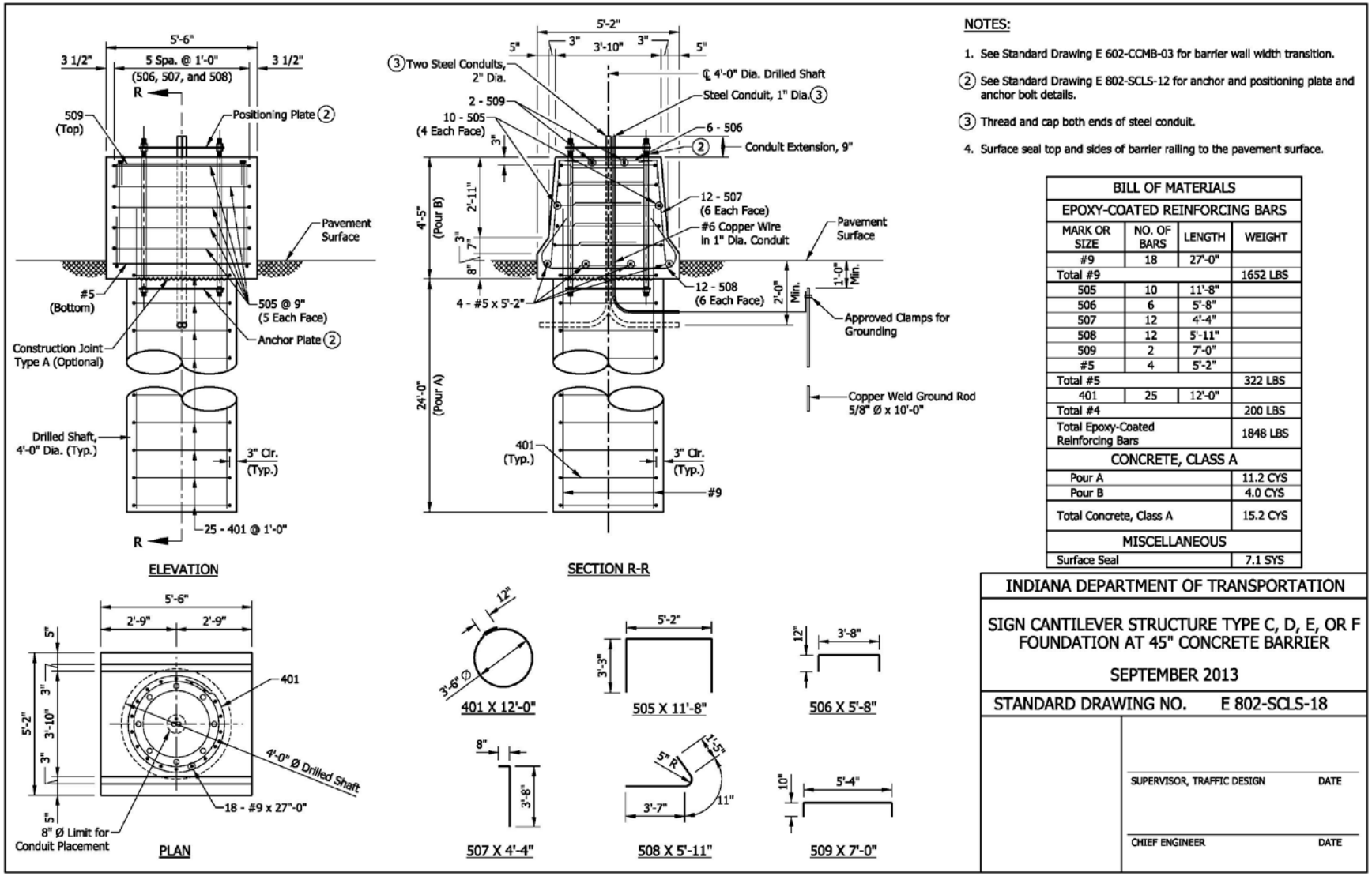

NOTES:

1. See Standard Drawing E 602-CCMB-03 for barrier wall width transition.
2. See Standard Drawing E 802-SCLS-12 for anchor and positioning plate and anchor bolt details.
3. Thread and cap both ends of steel conduit.
4. Surface seal top and sides of barrier railing to the pavement surface.

BILL OF MATERIALS			
EPOXY-COATED REINFORCING BARS			
MARK OR SIZE	NO. OF BARS	LENGTH	WEIGHT
#9	18	27'-0"	
Total #9			1652 LBS
505	10	11'-8"	
506	6	5'-8"	
507	12	4'-4"	
508	12	5'-11"	
509	2	7'-0"	
#5	4	5'-2"	
Total #5			322 LBS
401	25	12'-0"	
Total #4			200 LBS
Total Epoxy-Coated Reinforcing Bars			1848 LBS
CONCRETE, CLASS A			
Pour A			11.2 CYS
Pour B			4.0 CYS
Total Concrete, Class A			15.2 CYS
MISCELLANEOUS			
Surface Seal			7.1 SYS

INDIANA DEPARTMENT OF TRANSPORTATION

SIGN CANTILEVER STRUCTURE TYPE C, D, E, OR F
FOUNDATION AT 45" CONCRETE BARRIER

SEPTEMBER 2013

STANDARD DRAWING NO. E 802-SCLS-18

SUPERVISOR, TRAFFIC DESIGN DATE

CHIEF ENGINEER DATE

REVISION TO STANDARD SPECIFICATIONS AND STANDARD DRAWINGS

PROPOSED NEW 802-SCLS-19 SIGN CANTILEVER STRUCTURE

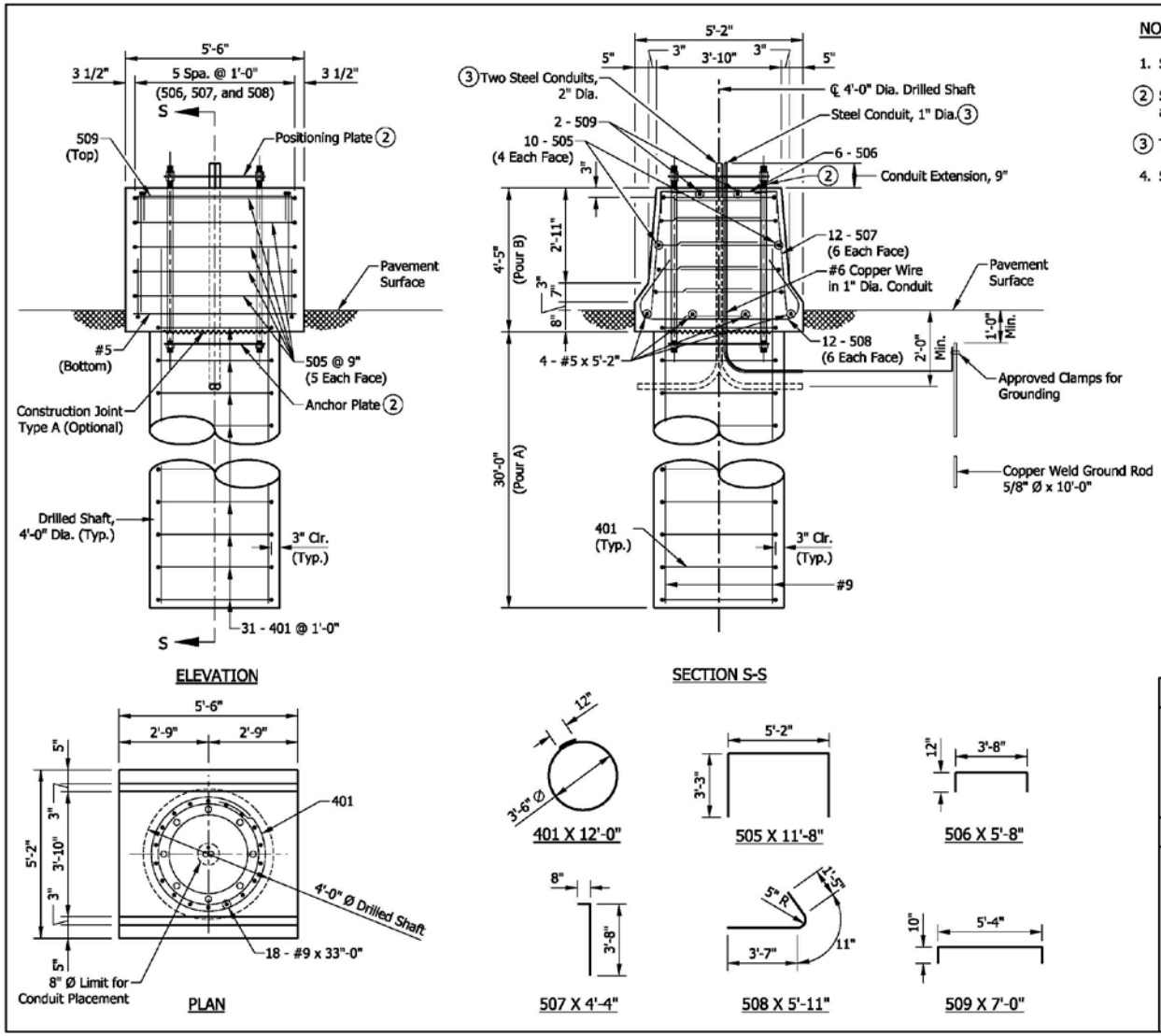

NOTES:

1. See Standard Drawing E 602-CCMB-03 for barrier wall width transition.
2. See Standard Drawing E 802-SCLS-12 for anchor and positioning plate and anchor bolt details.
3. Thread and cap both ends of steel conduit.
4. Surface seal top and sides of barrier railing to the pavement surface.

BILL OF MATERIALS			
EPOXY-COATED REINFORCING BARS			
MARK OR SIZE	NO. OF BARS	LENGTH	WEIGHT
#9	18	33'-0"	
Total #9			2020 LBS
505	10	11'-8"	
506	6	5'-8"	
507	12	4'-4"	
508	12	5'-11"	
509	2	7'-0"	
#5	4	5'-2"	
Total #5			322 LBS
401	31	12'-0"	
Total #4			248 LBS
Total Epoxy-Coated Reinforcing Bars			2698 LBS
CONCRETE, CLASS A			
Pour A			13.9 CYS
Pour B			4.0 CYS
Total Concrete, Class A			17.9 CYS
MISCELLANEOUS			
Surface Seal			7.1 SYS

INDIANA DEPARTMENT OF TRANSPORTATION

SIGN CANTILEVER STRUCTURE TYPE G, H, OR I
FOUNDATION AT 45" CONCRETE BARRIER

SEPTEMBER 2013

STANDARD DRAWING NO. E 802-SCLS-19

SUPERVISOR, TRAFFIC DESIGN DATE

CHIEF ENGINEER DATE

REVISION TO STANDARD SPECIFICATIONS AND STANDARD DRAWINGS

PROPOSED NEW 802-SCLS-20 SIGN CANTILEVER STRUCTURE

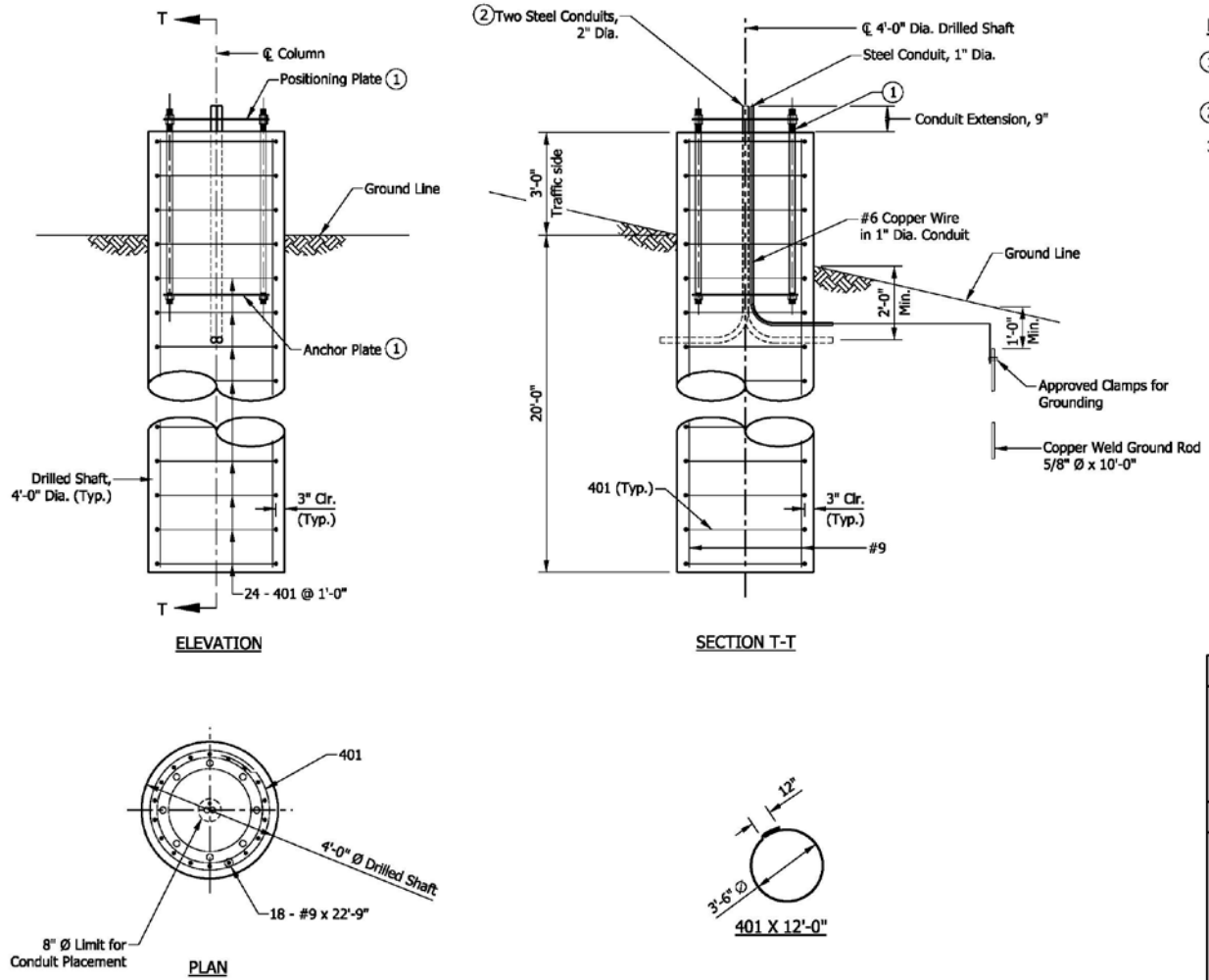

NOTES:

(1) See Standard Drawing E 802-SCLS-12 for anchor and positioning plate and anchor bolt details.

(2) Thread and cap both ends of steel conduit.

3. Surface seal top and sides of foundation to the ground surface.

BILL OF MATERIALS			
EPOXY-COATED REINFORCING BARS			
MARK OR SIZE	NO. OF BARS	LENGTH	WEIGHT
#9	18	22'-9"	
Total #9			1392 LBS
401	24	12'-0"	
Total #4			192 LBS
Total Epoxy-Coated Reinforcing Bars			1584 LBS
MISCELLANEOUS			
Concrete, Class A			10.7 CYS
Surface Seal			4.3 SYS

INDIANA DEPARTMENT OF TRANSPORTATION

SIGN CANTILEVER STRUCTURE TYPE A OR B FOUNDATION, 36" HEIGHT

SEPTEMBER 2013

STANDARD DRAWING NO. E 802-SCLS-20

SUPERVISOR, TRAFFIC DESIGN DATE

CHIEF ENGINEER DATE

REVISION TO STANDARD SPECIFICATIONS AND STANDARD DRAWINGS

PROPOSED NEW 802-SCLS-21 SIGN CANTILEVER STRUCTURE

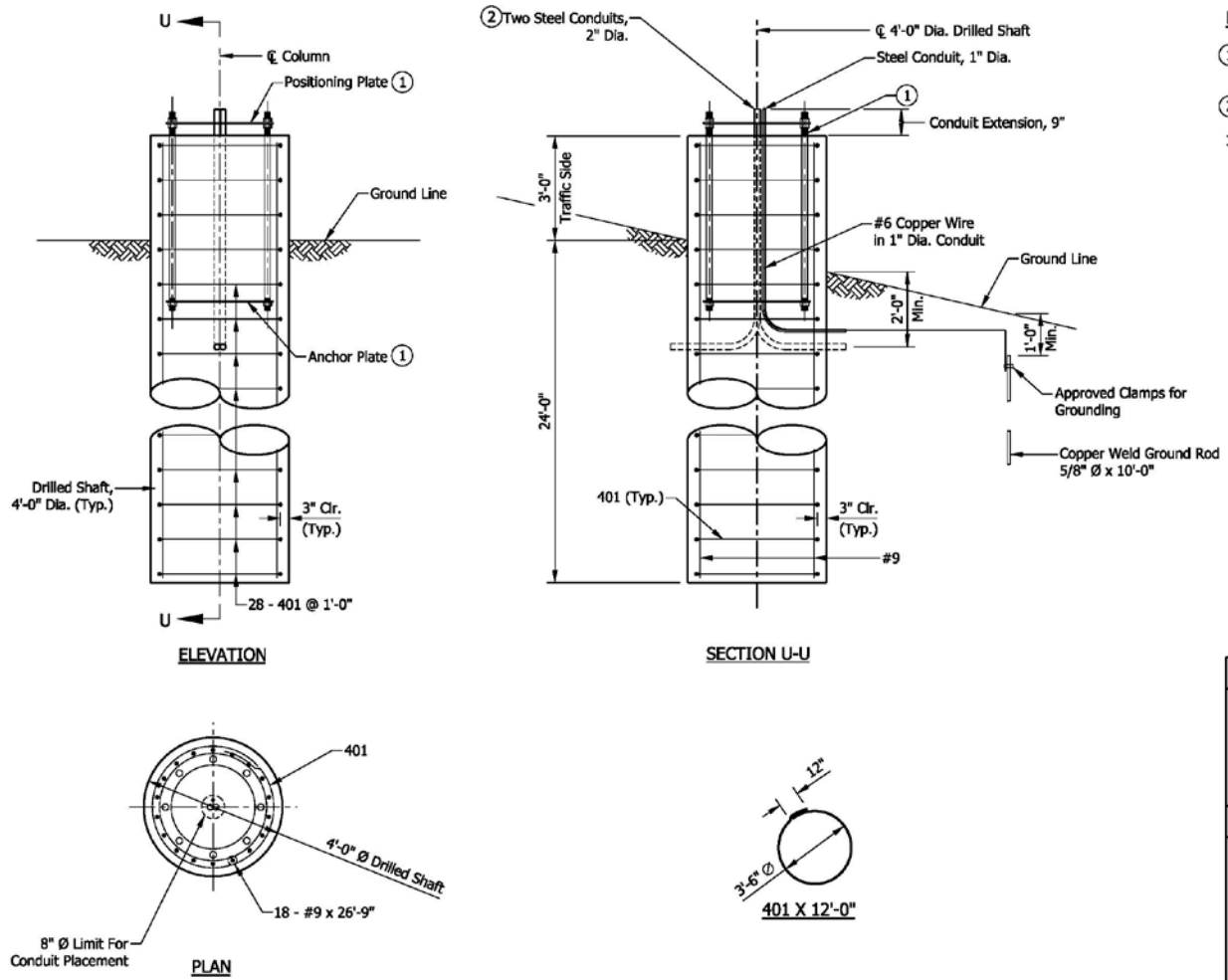

NOTES:

(1) See Standard Drawing E 802-SCLS-12 for anchor and positioning plate and anchor bolt details.

(2) Thread and cap both ends of steel conduit.

3. Surface seal top and sides of foundation to the ground surface.

BILL OF MATERIALS			
EPOXY-COATED REINFORCING BARS			
MARK OR SIZE	NO. OF BARS	LENGTH	WEIGHT
#9	18	26'-9"	
Total #9			1637 LBS
401	28	12'-0"	
Total #4			224 LBS
Total Epoxy-Coated Reinforcing Bars			1861 LBS
MISCELLANEOUS			
Concrete, Class A			12.6 CYS
Surface Seal			4.3 SYS

INDIANA DEPARTMENT OF TRANSPORTATION

SIGN CANTILEVER STRUCTURE TYPE C, D, E, OR F FOUNDATION, 36" HEIGHT

SEPTEMBER 2013

STANDARD DRAWING NO. E 802-SCLS-21

SUPERVISOR, TRAFFIC DESIGN DATE

CHIEF ENGINEER DATE

REVISION TO STANDARD SPECIFICATIONS AND STANDARD DRAWINGS

PROPOSED NEW 802-SCLS-22 SIGN CANTILEVER STRUCTURE

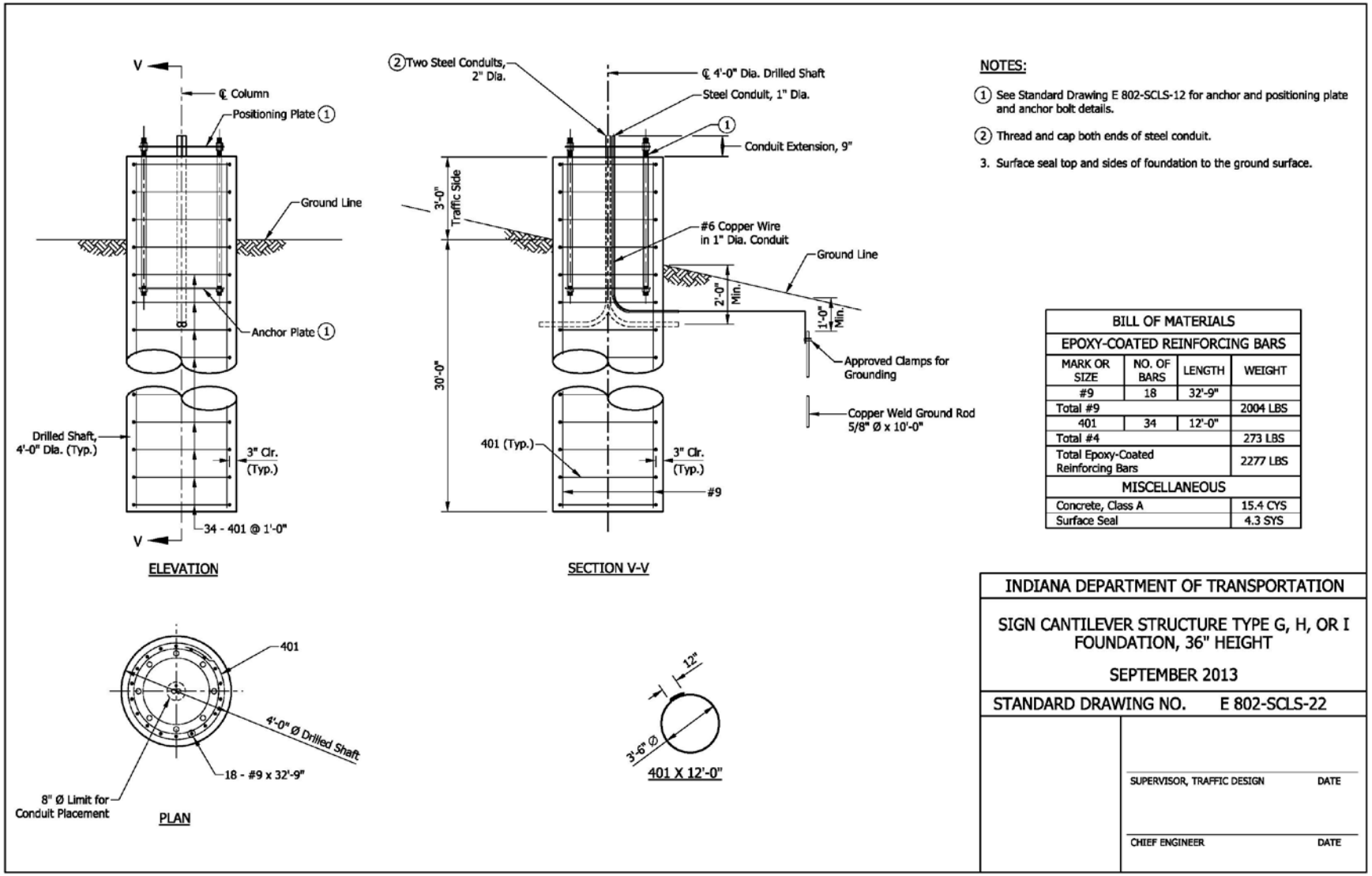

REVISION TO STANDARD SPECIFICATIONS AND STANDARD DRAWINGS

PROPOSED NEW 802-SCLS-23 SIGN CANTILEVER STRUCTURE

THIS PAGE LEFT INTENTIONALLY BLANK

FIRST DRAFT MINUTES PART 2

COMMENTS AND ACTION

802.06 PLACING CONCRETE
802.07(b) STRUCTURAL FRAMES
802.08 INSTALLING SIGNS
802.11 METHOD OF MEASUREMENT
802.12 BASIS OF PAYMENT
910.19 OVERHEAD SIGN STRUCTURES
802-DMSS-01 thru -23 DYNAMIC MESSAGE SIGN STRUCTURE
802-SBTS-01 thru -29 SIGN BOX TRUSS STRUCTURE
802-SCLS-01 thru -22 SIGN CANTILEVER STRUCTURE

DISCUSSION: This item was introduced by Mr. Vancleave, and with the assistance of Mr. Patel, explained that the accompanying drawings were revised and drawn in order to meet the design requirements in the AASHTO design code. They also stated that certain portions of the Standard Specifications, namely 802 and 910, need to be revised as well, in order to coincide with the proposed revisions to the Standard Drawings.

Mr. Reilman offered editorial revisions as shown highlighted above.
The group discussed and agreed with those revisions. Mr. Patel will look into the language concerning differentiating between steel and aluminum weld requirements, found on pages 11 and 13 of the agenda, as well as the required galvanizing thickness in accordance with ASTM A 123 as referenced on page 12. Mr. Patel will also make the appropriate drawing revisions as well. Mr. Patel provided all editorial revisions (galvanized thickness requirement) shortly after the meeting. Those revisions are highlighted as well.

Mr. Vancleave revised his motion, and this item was passed as revised.

Motion: Mr. Vancleave Second: Mr. Boruff Ayes: 8 Nays: 0	Action: ____ Passed as Submitted __X__ Passed as Revised _____ Withdrawn
Standard Specifications Sections affected: SECTION 802 pg 719 thru 728 910.19 pg 900 thru 903. Recurring Special Provision affected: NONE Standard Sheets affected: 802-SNIL-01, 02,03, 06 and 07 802-SNWW-01 thru 11; AND PROPOSED NEW Design Manual Sections affected: CHAPTER 502. GIFE Sections cross-references: NONE	__X__ 2014 Standard Specifications Book _____ Revise Pay Items List __X__ Create RSP (No.TBD) Effective March 01, 2013 Letting RSP Sunset Date: Sept. 01, 2013 _____ Revise RSP (No._____) Effective _____ Letting RSP Sunset Date: _____ Standard Drawing Effective Sept. 01, 2013 _____ Create RPD (No.802-T-184d; 802-T-185d; 802-T-186d) Effective March 01, 2013 Letting _____ Technical Advisory GIFE Update Req'd.? Y ___ N ___ By _____ Addition or _____ Revision Frequency Manual Update Req'd? Y___N___ By _____ Addition or _____ Revision Received FHWA Approval? YES

FIRST DRAFT MINUTES PART 2

Mr. Vancleave
Date: 11/16/12

SPECIFICATION, SPECIAL PROVISIONS AND DRAWINGS

REVISION TO SPECIAL PROVISIONS AND STANDARD DRAWINGS

PROPOSAL TO STANDARDS COMMITTEE

PROBLEM(S) ENCOUNTERED: Need to add new standardized Dual Arm Signal Structures to meet the INDOT project needs.

PROPOSED SOLUTION: New Dual Arm Signal Cantilever Structures and foundation standard drawings were developed meeting the latest AASHTO code requirements.

APPLICABLE STANDARD SPECIFICATIONS: 805, No changes to 922

APPLICABLE STANDARD DRAWINGS: New Standard Drawings 805-SDAC-01 thru 09

APPLICABLE DESIGN MANUAL SECTION: 77-4.03, 77-4.04, 77-4.05, 77-5.01, 77-5.02

APPLICABLE SECTION OF GIFE: N.A.

APPLICABLE RECURRING SPECIAL PROVISIONS: 922-T-168, 805-T-168

PAY ITEMS AFFECTED: Revision to the related pay items is in the attached RSP 805-T-168.

Submitted By: Richard Vancleave

Title: Roadway Policy and Standard Supervisor

Organization: INDOT

Phone Number: 317-232-5347

Date: 10/31/2012

APPLICABLE SUB-COMMITTEE ENDORSEMENT: Ad hoc review by industry, subcommittee from INDOT traffic section, Traffic System Division.

FIRST DRAFT MINUTES PART 2

(Note: Only affected sections of the RSP 805-T-169 rev. 04-19-12 are shown.
New proposed changes shown as highlighted in gray.)

805.15 Method of Measurement

Traffic signal head~~,~~*;* pedestrian signal head~~,~~*;* pedestrian push button~~,~~*;* controller cabinet foundation~~,~~*;* M foundation modified to P-1 foundation*;* signal steel strain pole~~,~~*;* signal wood pole~~,~~*;* ~~signal cantilever structure,~~ *signal cantilever structure,* ~~signals~~*single arm; signal cantilever structure, combination arm; signal cantilever structure, single arm , combination arm; signal cantilever structure, dual arm;* ~~signal cantilever structure, pole section 2, pole diameter 17 in.;~~ ~~signal cantilever structure, pole section 2, pole diameter 24 in.;~~ *signal cantilever structure, drilled shaft foundation type; signal cantilever structure, spread footing foundation type;* signal support foundation~~,~~*;* signal service~~,~~*;* disconnect hanger~~,~~*;* magnetometer detector~~,~~*;* microloop detector~~,~~*;* loop detector delay amplifier~~,~~*; loop detector delay counting amplifier; loop detector rack; auxiliary BIU panel; radio antenna; radio interconnect; radio splitter;* signal handhole~~,~~*;* signal detector housing~~,~~*;* span catenary and tether~~,~~*;* and span catenary for flasher will be measured by the number of units installed.

The pay length for a signal cantilever arm or combination arm will be the length shown in the Schedule of Pay Items.

Conduit of the type specified will be measured by the linear foot ~~(meter)~~ from outside to outside of foundations. Signal cable and signal interconnect cable will be measured by the linear foot ~~(meter)~~.

Preformed pave-over loops will be measured by the number of loops placed. Each loop will be measured only once, regardless of the number of signal cable turns. Signal cable from preformed pave-over loops to handholes, detector housings or from loop to loop will not be measured for payment.

The accepted quantities for payment for electrical signal or loop lead-in cable will be the quantities shown in the Schedule of Pay Items. Such quantities may be corrected if they are in error by more than 25%.

Saw cut for roadway loop detector and sealant will be measured by the linear foot ~~(meter)~~ for the full depth of slot cut in the pavement as shown on the plans or as directed.

If class X material is encountered during foundation excavation, measurement will be made in accordance with 206.10.

Radio, interconnection system testing, ~~T~~traffic signal installation or modernization, flasher installation or modernization, miscellaneous equipment for traffic signals, and final cleanup in accordance with 805.14 will not be measured for payment.

Traffic signal equipment removal ~~and~~*will be measured per each installation to be removed.* ~~t~~*T*ransportation of salvageable signal equipment will not be measured.

FIRST DRAFT MINUTES PART 2

805.16 Basis of Payment

Radio, interconnection system testing, ~~T~~traffic signal installation, flasher installation, traffic signal modernization, and flasher modernization, all of the type and the location number specified, will be paid for at a contract lump sum price.

If specified as pay items, ~~traffic signal~~ controller and cabinet~~,~~*;* traffic signal head~~,~~*;* pedestrian signal head~~,~~*;* pedestrian push button~~,~~*;* controller cabinet foundation~~,~~*;* M foundation modified to P-1 foundation~~,~~*; radio antenna; radio interconnect; radio splitter;* signal steel strain pole~~,~~*;* signal wood pole~~,~~*;* ~~signal cantilever structure,~~ *signal cantilever structure,* ~~*signal*~~ *single arm; signal cantilever structure, combination arm;* ~~*signal cantilever structure, pole section 2, pole diameter 17 in.; signal cantilever structure, pole section 2, pole diameter 24 in.;*~~ *signal cantilever structure, single arm ,combination arm; signal cantilever structure, dual arm; signal cantilever structure, drilled shaft foundation type; signal cantilever structure, spread footing foundation type;* signal support foundation~~,~~*;* signal pedestals~~,~~*;* signal service~~,~~*;* disconnect hanger~~,~~*;* magnetometer detector~~,~~*;* microloop detector~~,~~*;* loop detector delay amplifier~~,~~*; loop detector delay counting amplifier; loop detector rack; auxiliary BIU panel;* signal handhole~~,~~*;* signal detector housing~~,~~*;* span catenary and tether~~,~~*;* and span catenary for flasher will be paid for at the contract unit price per each. Conduit of the type specified, signal cable, interconnect cable, electrical signal cable, loop lead-in cable, and saw cut for roadway loop detector and sealant will be paid for at the contract unit price per linear foot ~~(meter)~~.

Preformed pave-over loops will be paid at the contract unit price per each.

The removal of existing traffic signal equipment designated to be removed will be paid for at the contract ~~lump sum~~ *unit* price *per each* for traffic signal equipment, remove *for each location removed*. When designated as a pay item, the transportation of salvageable signal equipment will be paid for at the contract lump sum price for transportation of salvageable signal equipment.

Class X excavation will be paid for in accordance with 206.11.

Miscellaneous equipment for traffic signals will be paid for at a contract lump sum price.

Payment will be made under:

Pay Item	**Pay Unit Symbol**
Auxiliary BIU Panel	*EACH*
Conduit _____ type	*LFT*

FIRST DRAFT MINUTES ARTZ

REVISION TO SPECIAL PROVISIONS AND STANDARD DRAWINGS

RSP 805-T-169 TRAFFIC SIGNALS

Controller and Cabinet, _____, _____ Phase.....EACH
type no.
Controller and Cabinet, Flasher, _____ .....EACH
type
Controller Cabinet Foundation, _____.....EACH
type
Controller Cabinet Foundation, M, Modify to P-1 .....EACH
Disconnect Hanger.....EACH
Flasher Installation, Location No. _____.....LS
Flasher Modernization, Location No. _____ .....LS
Handhole, Signal.....EACH
Loop Detector Delay Amplifier, _____ Channel.....EACH
no.
Loop Detector Delay *Counting* Amplifier, _____ Channel.....EACH
no.
Loop Detector Rack.....*EACH*
Magnetometer Detector.....EACH
Microloop Detector *Probe* .....EACH
Miscellaneous Equipment for Traffic Signals.....LS
Pedestrian Push Button .....EACH
Pedestrian Signal Head, _____, _____ .....EACH
type lens size
Radio Antenna.....*EACH*
Radio, Interconnect.....*EACH*
Radio, Interconnection System Testing.....*LS*
Radio Splitter .....*EACH*
Saw Cut for Roadway Loop and Sealant .....LFT ~~(m)~~
Signal Cable, _____, No. _____ Copper, _____ C/ _____.....LFT ~~(m)~~
type conductors/size
Signal Cable, Preformed Pave-Over Loop .....*EACH*
~~Signal Cantilever Structure, Mast Arm _____ ft (m).....EACH~~
~~length~~
Signal Cantilever Structure, ~~Signal~~Single Arm _____ ft .....*EACH*
length
~~*Signal Cantilever Structure, Pole Section 2,*~~
~~*Pole Diameter 17 in.*.....*EACH*~~
~~*Signal Cantilever Structure, Pole Section 2,*~~
~~*Pole Diameter 24 in.*.....*EACH*~~
Signal Cantilever Structure, Combination Arm _____ ft.....*EACH*
length
Signal Cantilever Structure, Single Arm___ft, Combination Arm ___ft...EACH
length length
Signal Cantilever Structure, Dual Arm___ ft, ___ ft .....*EACH*
length length

FIRST DRAFT MINUTES PART 2

REVISION TO SPECIAL PROVISIONS AND STANDARD DRAWINGS

RSP 805-T-169 TRAFFIC SIGNALS

Signal Cantilever Structure, Drilled Shaft Foundation, _____ ..... EACH
type
Signal Cantilever Structure, Spread Footing Foundation, _____ ..... EACH
type
Signal Detector Housing .....EACH
Signal Interconnect Cable, ____, No. ____
type
Copper, ____ C/ ____ .....LFT ~~(m)~~
conductors/size
Signal Pedestal, _____ ft ~~(m)~~ .....EACH
length
Signal Pole, Wood, _____, _____ ft ~~(m)~~ .....EACH
class length
Signal Service.....EACH
Signal Strain Pole, Steel, _____ ft ~~(m)~~.....EACH
length
Signal Support Foundation, _____ in. ~~(mm)~~ x _____ in. ~~(mm)~~
x _____ in. ~~(mm)~~.....EACH
Span and Catenary for Flasher .....EACH
Span, Catenary, and Tether .....EACH
Traffic Signal Equipment, Remove..... ~~LS~~*EACH*
Traffic Signal Head, _____ Way, _____ Section, _____ .....EACH
no. no. lens sizes & colors.....EACH
Traffic Signal Installation, _____, Location No. _____ .....LS
type
Traffic Signal Modernization, _____, Location No. _____.....LS
type
Transportation of Salvageable Signal Equipment.....LS

The cost of the solar panel, battery cabinet, program timing module, signal heads, wiring, and all hardware required to complete the installation shall be included in the cost of flasher installation or flasher modernization.

The cost of all wiring, hardware, anchor bolts, and associated equipment required to operate the intersections shall be included in the cost of controller and cabinet, flasher.

The cost of 2 loop detector racks, all wiring, hardware, anchor bolts, and associated equipment required to operate the intersection shall be included in the cost of controller and cabinet. The cost of any additional loop detector racks shall be included in the cost of loop detector rack.

The cost of signal face hook-up wire, pole plates and arms for side mounts, mid-mast arm mount, pipe arms, signal brackets, visors, louvers, bulbs, span hanger, backplates, balance adjuster, weatherhead, and all additional hardware required to

FIRST DRAFT MINUTES PART 2

assemble a combination of signal faces as shown on the plans shall be included in the cost of traffic signal head or pedestrian signal head.

The cost of the push button, pedestrian actuated signal sign, and all hardware required to complete the installation shall be included in the cost of pedestrian push button.

The cost of concrete, conduits, grounding bushings, ground rod, ground wire, drainage, and all hardware required to complete the installation shall be included in the cost of controller cabinet foundation.

The cost of the base plate, metal skirt base plate, anchor bolts, handhole and cover grounding lug, 2 in. ~~(50 mm)~~ pipe cable entrance, J hook, and top cover as shown on the plans shall be included in the cost of signal strain pole, steel.

The cost of downguys, anchor rods, downguy guards, and hub-eyes as shown on the plans, and all hardware required to complete the installation shall be included in the cost of signal pole, wood.

The cost of all hardware including the metal skirt base plate, where necessary, to complete the installation as shown on the plans shall be included in the cost of signal cantilever structure.

The cost of signal pole section 1 and single arm shall be included in the cost of the signal cantilever structure, single arm.

The cost of signal pole section 2 and combination arm shall be included in the cost of the signal cantilever structure, combination arm.

The cost of signal pole section 1, 2 and single arm, combination arm shall be included in the cost of the signal cantilever structure, single arm, combination arm; when structure with single arm and combination arm is required in the same contract.

The cost of signal pole and dual arms shall be included in the cost of the signal cantilever structure, dual arm.

The cost of concrete, reinforcing steel, conduits, ground rod, ground wire, grounding bushings, and all hardware required to complete the installation shall be included in the cost of signal support foundation.

The cost of the pedestal metal base, pedestal pole, pole cap when necessary, anchor bolts, and all hardware required to complete the installation shall be included in the cost of signal pedestal.

FIRST DRAFT MINUTES PART 2

REVISION TO SPECIAL PROVISIONS AND STANDARD DRAWINGS

RSP 805-T-169 TRAFFIC SIGNALS

The cost of weatherhead, 1 in. ~~(25 mm)~~ conduit riser, entrance switch, 1 ~~in.~~ to 2 in. ~~(25 mm to 50 mm)~~ conduit reducer, ground rod, ground wire, and all hardware required to complete the installation, including the meter base when required and supplied by the utility company shall be included in the cost of signal service.

The cost of the detector unit, lead-in cable, and all work necessary for proper installation shall be included in the cost of magnetometer detector or microloop detector *probe. The cost of all hardware and work required to provide and install signal cable from microloop detector probe, including extra-low voltage (home-run), from the handhole adjacent to the detector probe to the controller cabinet shall be included in the cost of signal cable.*

The cost of the slot cut on the pavement, ~~sash cord,~~ backer rod, loop sealant, and all testing in accordance with 805.09 shall be included in the cost of saw cut for roadway loop and sealant.

The cost of signal cable from preformed pave-over loops to handholes, detector housings or from loop to loop shall be included in the cost of the preformed pave-over loop.

The cost of all work and hardware required to properly install overhead or underground signal cable as shown on the plans or as directed shall be included in the cost of signal cable and signal interconnect cable.

~~The cost of the independent shelf mount unit or card-rack unit, and power module shall be included in the cost of loop detector delay amplifier.~~

The cost of concrete reinforcing pipe, ring and cover eye bolts, hardware, handhole bottom, and aggregate under the handhole bottom as shown on the plans shall be included in the cost of handhole, signal.

The cost of aluminum casting, enclosure concrete, ~~steel~~ conduit and elbow, and all hardware required to complete the installation shall be included in the cost of signal detector housing.

The cost of steel pole bands or straight eye bolts, span, catenary, and tether of wire rope cables, cable rings, type A support cable, wire rope clips, safety cable, thimble, service sleeve, and all hardware required to complete the installation as shown on the plans shall be included in the cost of span, catenary, and tether for signal, or span and catenary for flasher.

The cost to repair or replace damaged or lost salvageable traffic signal equipment shall be at the Contractor's expense.

FIRST DRAFT MINUTES PART 2

REVISION TO SPECIAL PROVISIONS AND STANDARD DRAWINGS

RSP 805-T-169 TRAFFIC SIGNALS

The cost of excavation, backfill, final cleanup in accordance with 805.14, and necessary incidentals shall be included in the cost of the pay items in this section.

FIRST DRAFT MINUTES PART 2

REVISION TO SPECIAL PROVISIONS AND STANDARD DRAWINGS

PROPOSED NEW 805-SDAC-01 SIGNAL DUAL ARM CANTILEVERS

INDEX

SHEET NO.	SUBJECT
1	Index
2	Pole Dimensions and Details
3	Arm Dimensions and Details
4	Base Plate and Pole Top Cover Details
5	Arm Connection Details
6	Handhole and I.D. Tag Details
7	Loading Diagrams
8	Foundation, Drilled Shaft Type E, for Dual Arms 35' or Less
9	Foundation, Drilled Shaft Type F, for Dual Arms Greater Than 35' to 45'

INDIANA DEPARTMENT OF TRANSPORTATION

SIGNAL DUAL ARM CANTILEVERS
DRAWING INDEX

SEPTEMBER 2013

STANDARD DRAWING NO. E 805-SDAC-01

SUPERVISOR, TRAFFIC DESIGN DATE

CHIEF ENGINEER DATE

REVISION TO SPECIAL PROVISIONS AND STANDARD DRAWINGS

PROPOSED NEW 805-SDAC-02 SIGNAL DUAL ARM CANTILEVERS

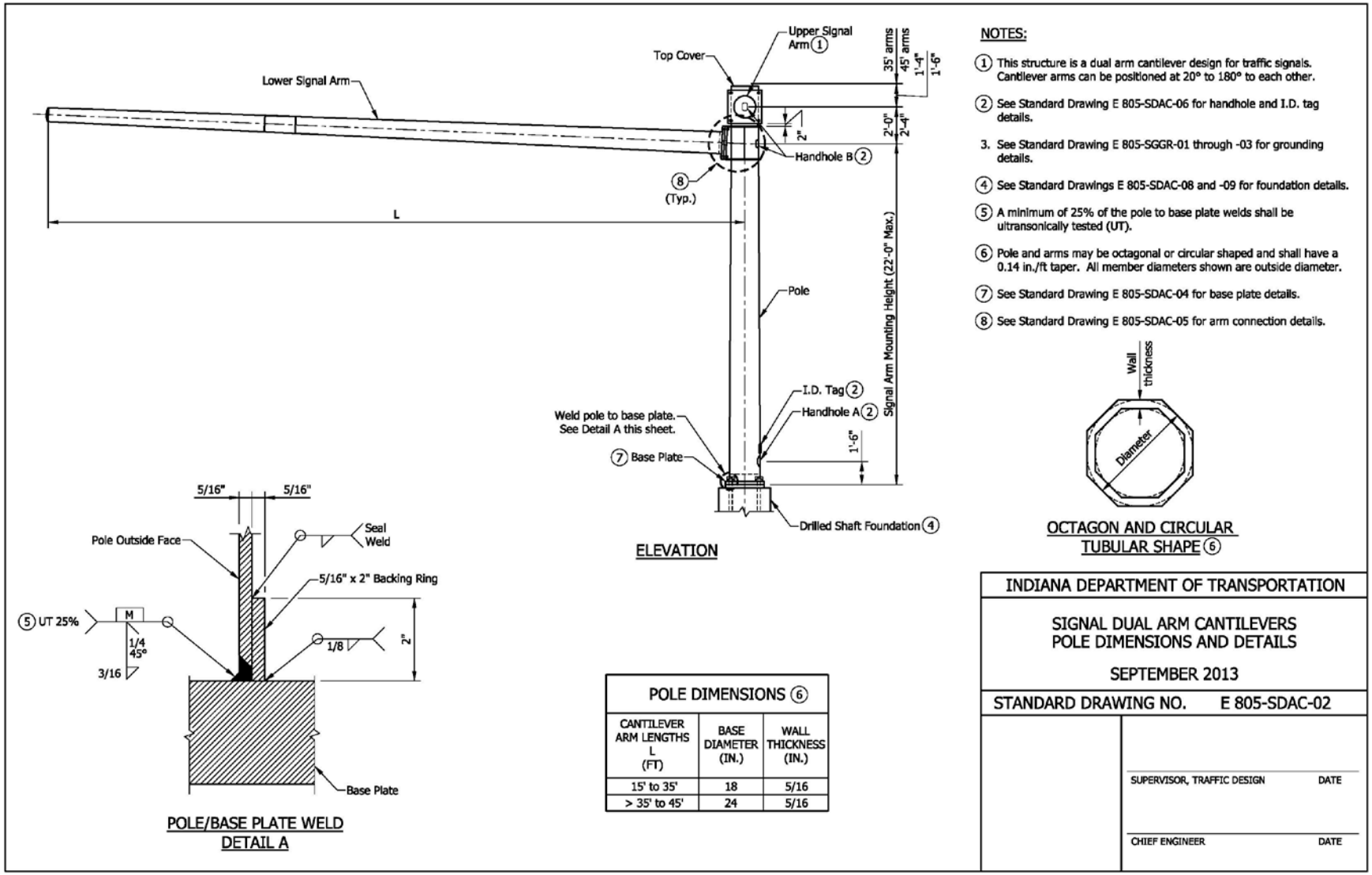

POLE DIMENSIONS (6)

CANTILEVER ARM LENGTHS L (FT)	BASE DIAMETER (IN.)	WALL THICKNESS (IN.)
15' to 35'	18	5/16
> 35' to 45'	24	5/16

REVISION TO SPECIAL PROVISIONS AND STANDARD DRAWINGS

PROPOSED NEW 805-SDAC-03 SIGNAL DUAL ARM CANTILEVERS

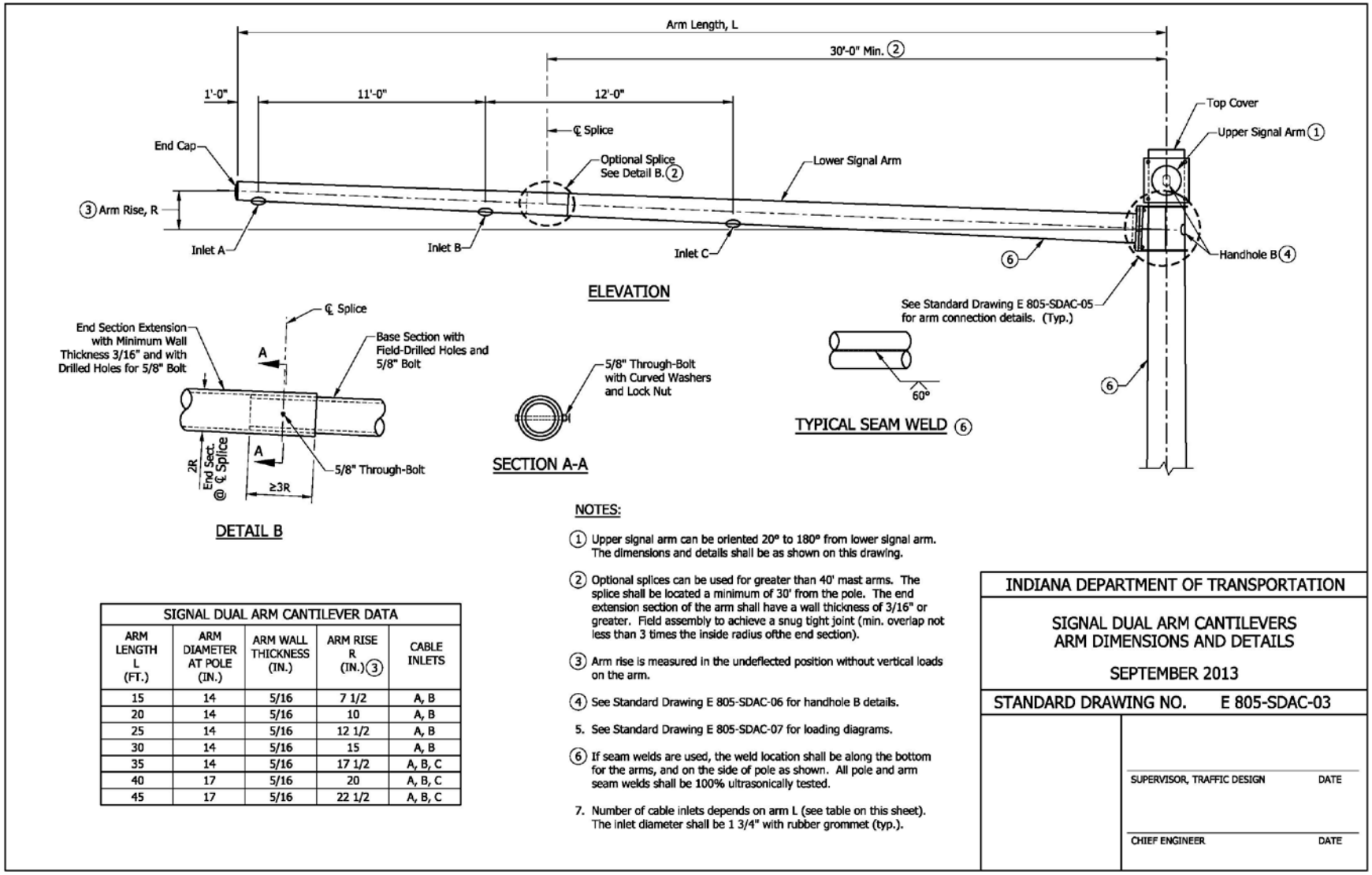

SIGNAL DUAL ARM CANTILEVER DATA				
ARM LENGTH L (FT.)	ARM DIAMETER AT POLE (IN.)	ARM WALL THICKNESS (IN.)	ARM RISE R (IN.) 3	CABLE INLETS
15	14	5/16	7 1/2	A, B
20	14	5/16	10	A, B
25	14	5/16	12 1/2	A, B
30	14	5/16	15	A, B
35	14	5/16	17 1/2	A, B, C
40	17	5/16	20	A, B, C
45	17	5/16	22 1/2	A, B, C

NOTES:

1. Upper signal arm can be oriented 20° to 180° from lower signal arm. The dimensions and details shall be as shown on this drawing.
2. Optional splices can be used for greater than 40' mast arms. The splice shall be located a minimum of 30' from the pole. The end extension section of the arm shall have a wall thickness of 3/16" or greater. Field assembly to achieve a snug tight joint (min. overlap not less than 3 times the inside radius ofthe end section).
3. Arm rise is measured in the undeflected position without vertical loads on the arm.
4. See Standard Drawing E 805-SDAC-06 for handhole B details.
5. See Standard Drawing E 805-SDAC-07 for loading diagrams.
6. If seam welds are used, the weld location shall be along the bottom for the arms, and on the side of pole as shown. All pole and arm seam welds shall be 100% ultrasonically tested.
7. Number of cable inlets depends on arm L (see table on this sheet). The inlet diameter shall be 1 3/4" with rubber grommet (typ.).

INDIANA DEPARTMENT OF TRANSPORTATION

SIGNAL DUAL ARM CANTILEVERS
ARM DIMENSIONS AND DETAILS

SEPTEMBER 2013

STANDARD DRAWING NO. E 805-SDAC-03

SUPERVISOR, TRAFFIC DESIGN DATE

CHIEF ENGINEER DATE

REVISION TO SPECIAL PROVISIONS AND STANDARD DRAWINGS

PROPOSED NEW 805-SDAC-04 SIGNAL DUAL ARM CANTILEVERS

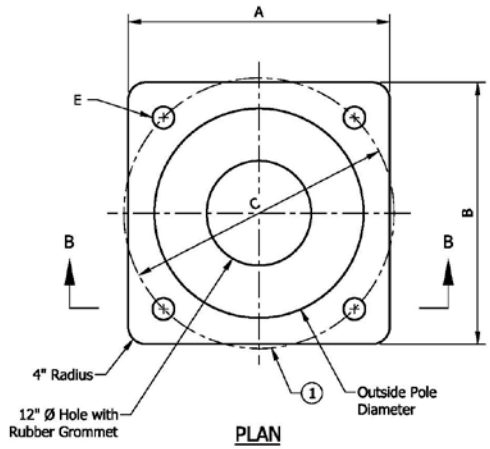

PLAN

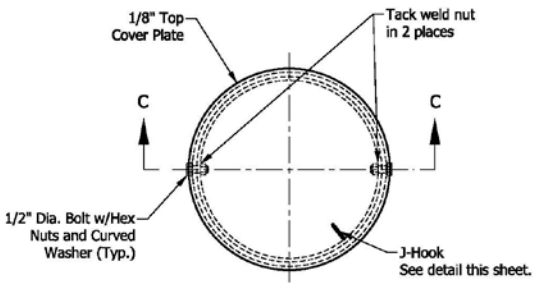

PLAN
TOP COVER - STEEL COLUMN

NOTES:

1. Anchor bolt circle shall allow clearance for the anchor bolt washers. Cutting or trimming of the washers will not be allowed.
2. See Standard Drawing E 805-SDAC-02 for handhole locations.
3. See Standard Drawing E 805-SDAC-06 for handhole details.

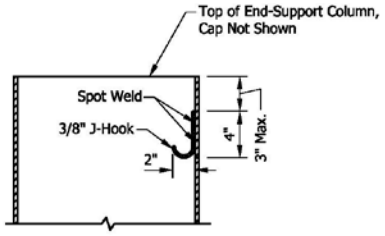

CABLE J-HOOK

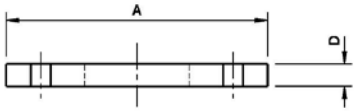

SECTION B-B
BASE PLATE

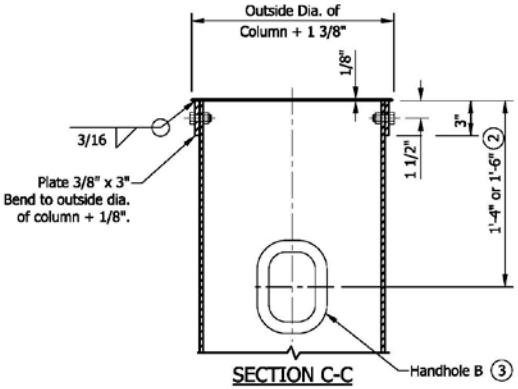

SECTION C-C

BASE PLATE DATA				
POLE DIAMETER (IN.)	PLATE DIMENSIONS A X B (IN. X IN.)	ANCHOR BOLTS CIRCLE C (IN.)	PLATE THICKNESS D (IN.)	BOLT HOLE DIAMETER E (IN.)
18	26 x 26	25	2 1/4	2 9/16
24	30 x 30	31	2 1/2	2 13/16

INDIANA DEPARTMENT OF TRANSPORTATION

SIGNAL DUAL ARM CANTILEVERS
BASE PLATE AND POLE TOP COVER DETAILS

SEPTEMBER 2013

STANDARD DRAWING NO. E 805-SDAC-04

SUPERVISOR, TRAFFIC DESIGN DATE

CHIEF ENGINEER DATE

REVISION TO SPECIAL PROVISIONS AND STANDARD DRAWINGS

PROPOSED NEW 805-SDAC-05 SIGNAL DUAL ARM CANTILEVERS

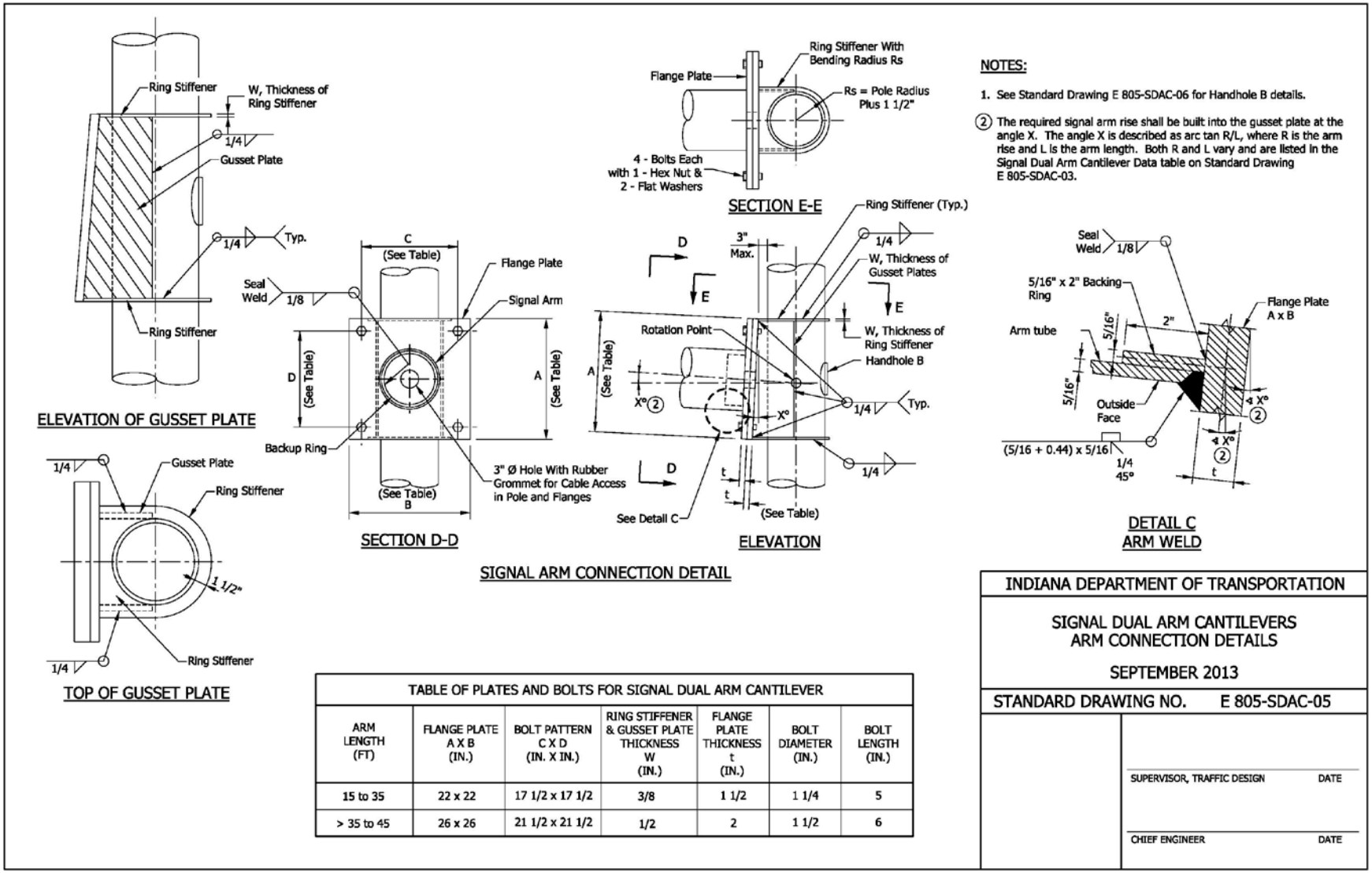

NOTES:

1. See Standard Drawing E 805-SDAC-06 for Handhole B details.

2. The required signal arm rise shall be built into the gusset plate at the angle X. The angle X is described as arc tan R/L, where R is the arm rise and L is the arm length. Both R and L vary and are listed in the Signal Dual Arm Cantilever Data table on Standard Drawing E 805-SDAC-03.

TABLE OF PLATES AND BOLTS FOR SIGNAL DUAL ARM CANTILEVER

ARM LENGTH (FT)	FLANGE PLATE A X B (IN.)	BOLT PATTERN C X D (IN. X IN.)	RING STIFFENER & GUSSET PLATE THICKNESS W (IN.)	FLANGE PLATE THICKNESS t (IN.)	BOLT DIAMETER (IN.)	BOLT LENGTH (IN.)
15 to 35	22 x 22	17 1/2 x 17 1/2	3/8	1 1/2	1 1/4	5
> 35 to 45	26 x 26	21 1/2 x 21 1/2	1/2	2	1 1/2	6

INDIANA DEPARTMENT OF TRANSPORTATION

SIGNAL DUAL ARM CANTILEVERS
ARM CONNECTION DETAILS

SEPTEMBER 2013

STANDARD DRAWING NO. E 805-SDAC-05

SUPERVISOR, TRAFFIC DESIGN DATE

CHIEF ENGINEER DATE

REVISION TO SPECIAL PROVISIONS AND STANDARD DRAWINGS

PROPOSED NEW 805-SDAC-06 SIGNAL DUAL ARM CANTILEVERS

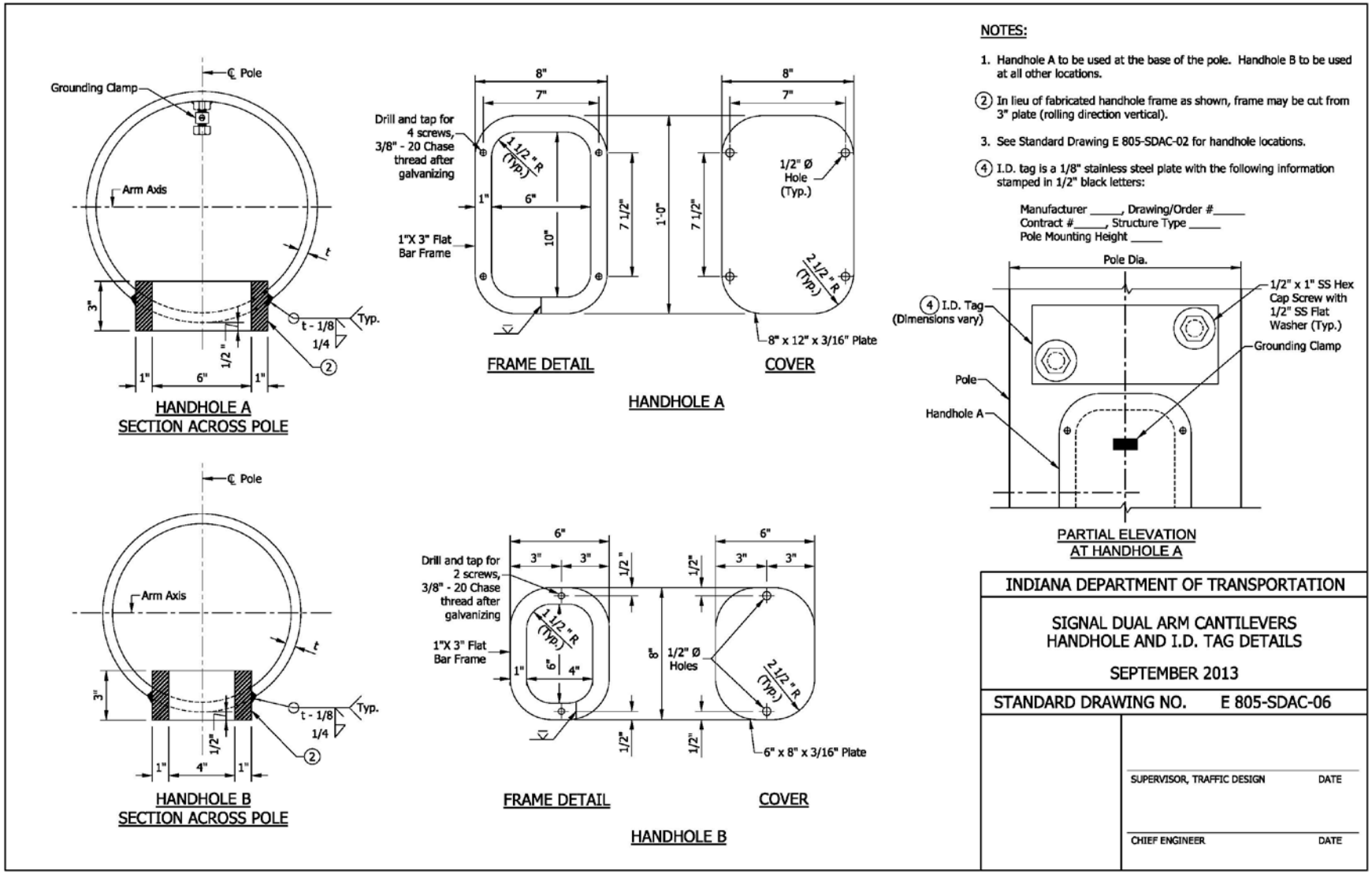

REVISION TO SPECIAL PROVISIONS AND STANDARD DRAWINGS

PROPOSED NEW 805-SDAC-07 SIGNAL DUAL ARM CANTILEVERS

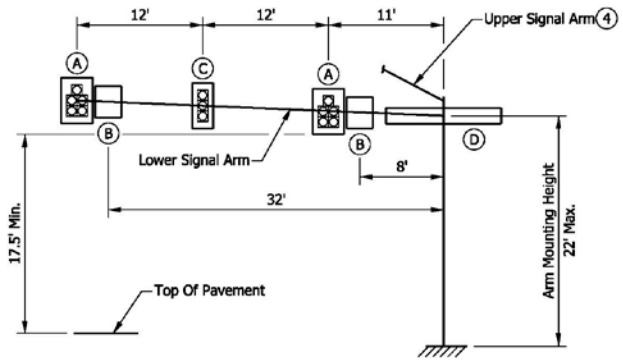

35' ARMS

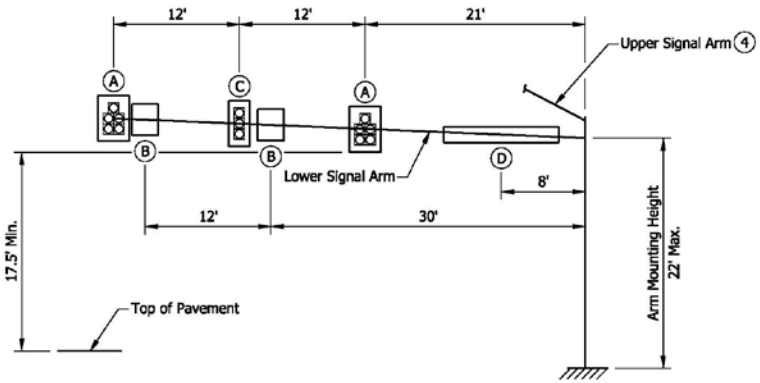

45' ARMS

NOTES:

1. The arms and pole are designed for the loading conditions shown. For arm lengths shorter than 35', the loading shall not exceed the loading shown for the 35' arm length.
2. Foundation Type E is designed for arm length of 35' or less. See Standard Drawing E 805-SDAC-08.
3. Foundation Type F is designed for arm length of greater than 35' to 45'. See Standard Drawing E 805-SDAC-09.

4 Both arms can be loaded as shown in loading diagrams.

SIGNAL AND SIGN LOADING INFORMATION TABLE

DEVICE	DESCRIPTION	DEVICE AREA (SQ FT)	WEIGHT (LBS)
A	12" - 5 section signal head with backplates	14.5	69
B	36" x 30" regulatory sign	7.5	19
C	12" - 3 section signal head with backplates	10.1	55
D	18" x 11'-0" street name sign	16.5	41

INDIANA DEPARTMENT OF TRANSPORTATION

SIGNAL DUAL ARM CANTILEVERS
LOADING DIAGRAMS

SEPTEMBER 2013

STANDARD DRAWING NO. E 805-SDAC-07

SUPERVISOR, TRAFFIC DESIGN DATE

CHIEF ENGINEER DATE

REVISION TO SPECIAL PROVISIONS AND STANDARD DRAWINGS

PROPOSED NEW 805-SDAC-08 SIGNAL DUAL ARM CANTILEVERS

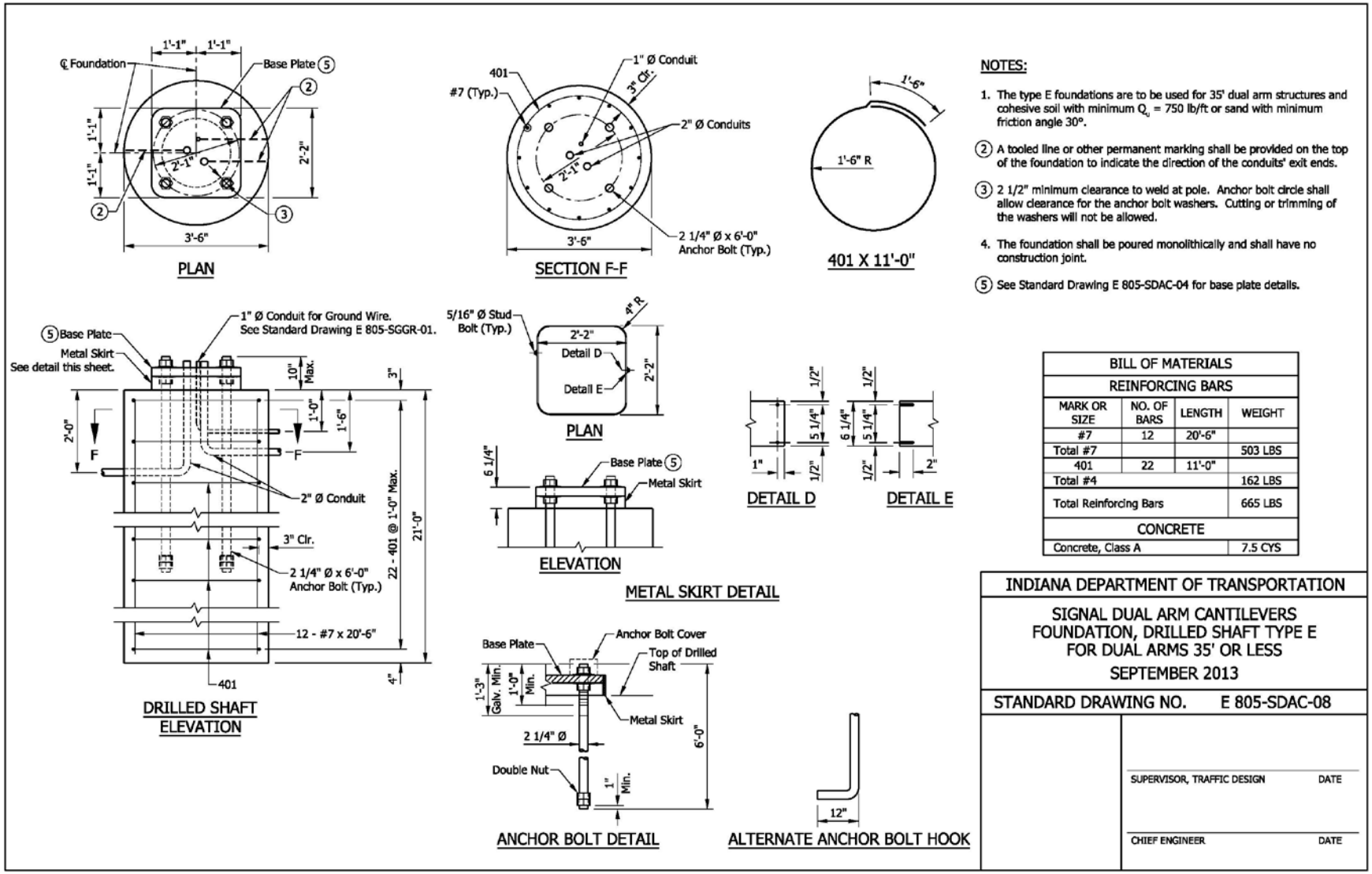

REVISION TO SPECIAL PROVISIONS AND STANDARD DRAWINGS

PROPOSED NEW 805-SDAC-09 SIGNAL DUAL ARM CANTILEVERS

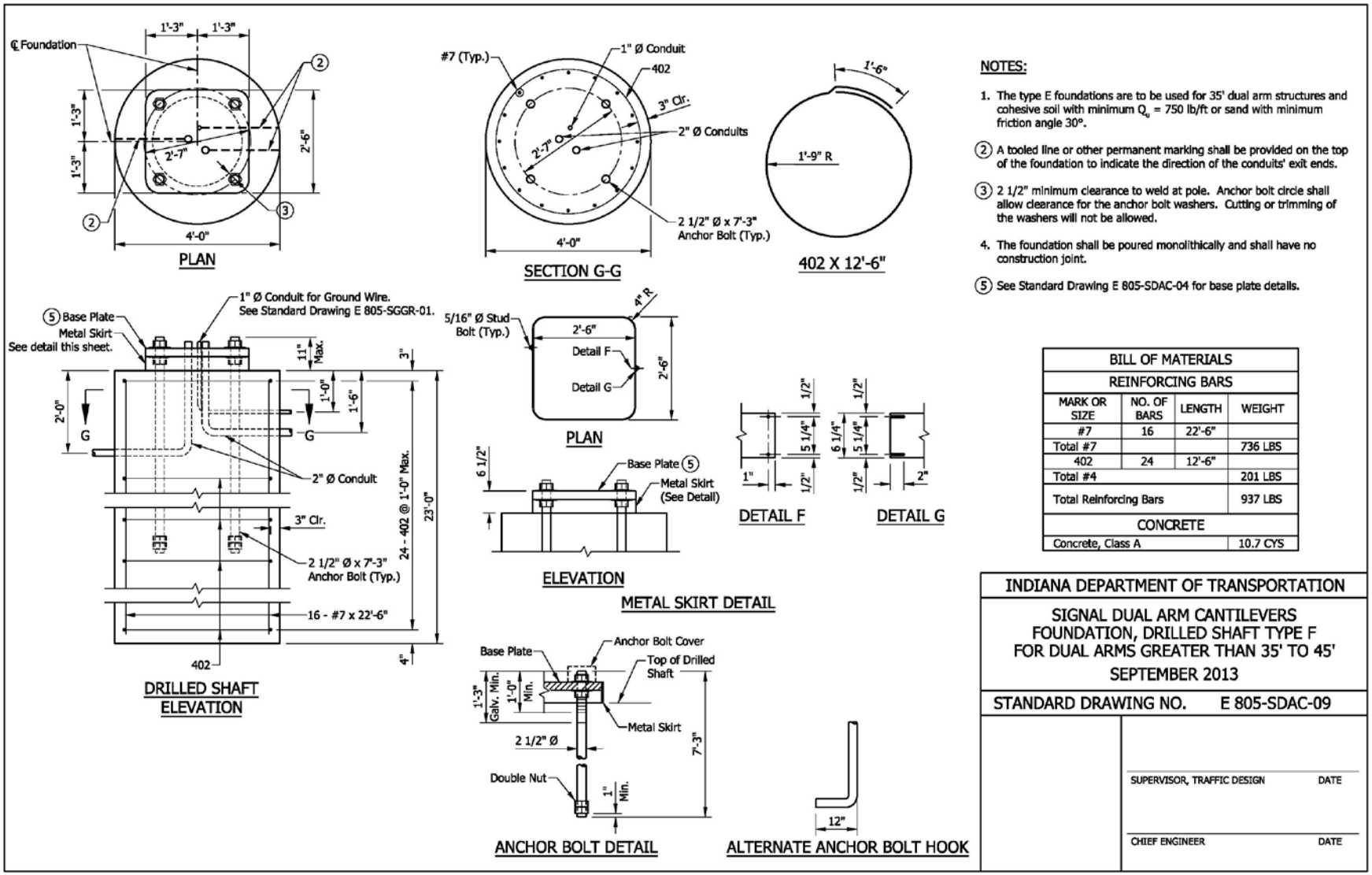

BILL OF MATERIALS			
REINFORCING BARS			
MARK OR SIZE	NO. OF BARS	LENGTH	WEIGHT
#7	16	22'-6"	
Total #7			736 LBS
402	24	12'-6"	
Total #4			201 LBS
Total Reinforcing Bars			937 LBS
CONCRETE			
Concrete, Class A			10.7 CYS

THIS PAGE LEFT INTENTIONALLY BLANK

FIRST DRAFT MINUTES PART 2

77-4.03 Signal Mounting

The Department's preferred practice is to install a traffic signal using span, catenary, and tether cables, or cantilever structures with poles on all four corners. A pedestrian signal is mounted on a pedestal or pole. A pedestal- or pole-mounted supplemental signal may be used if there is a left-turn signal in a median or on the near side of the intersection if the intersection is significantly wide. Figures 77-4D, 77-4E, and 77-4F list the advantages and disadvantages of the pole-mounted signal, cable-span signal mounting, and the cantilever signal mounting, respectively.

For spans, steel strain poles are used. Steel strain poles provide greater strength, are easier to maintain, and require less space. Wood poles require the use of down-guy cables and are limited to a temporary installation.

A signal-cantilever structure is designed to satisfy the AASHTO Standard Specifications for Structural Supports for Highway Signs, Luminaires and Traffic Signals, 2009, Fifth Edition.

A standardized signal-cantilever structure and its foundations should be as shown on INDOT Standard Drawings ~~E 805-TSCS-01 through -18~~. See Section 77-4.04(01) guidance in selecting a standardized structure for use. These structures are designed for the loading and structural dimensions as shown on the standard drawings.

A standardized Dual arm signal cantilever structure and its foundations should be as shown on the INDOT standard drawings. These structures are designed for the loading and structure dimensions as shown on the standard drawings.

See Section 77-4.04(02) for design criteria for a non-standardized structure.

Overhead highway lighting may be provided, where warranted (see Section 78-2.0), at a rural signalized intersection. A traffic-signal span-support pole or a cantilever pole may be used for overhead highway lighting. Figure 77-4G provides an illustration of a combination signal-luminaire pole. INDOT does not use combination poles. Figure 77-4H provides the heads' orientation for a cable-span-mounted signal.

77-4.04 Signal-Cantilever Structure Selecction Guidance and Design Criteria

77-4.04(01) Selection Guidance

FIRST DRAFT MINUTES PART 2

INDOT Standard Drawings ~~E-805-TSCS-01 through -18~~ show details for standardized signal cantilever structures, pole section 2, combination arm, and drilled-shaft and spread foundations.

~~*To determine the foundation type, soil borings will be required ? to determine if soil is cohesive or sand, the soil-bearing capacity, and the friction coefficient. Once the soil properties are known, the foundation type can be determined as shown in Figure 77-4 I.*~~

To determine the foundation type, at least one soil boring per intersection is required. Contact office of Geotech engineering for availability of any existing soil boring information for the location. Once the soil properties are known, the foundation type can be determined as shown in Figure 77-4 I.

A signal-cantilever structure should be designed to provide a minimum clearance of 17.5 ft under each signal head or sign. Clearance should be the vertical distance from the lowest point of the signal head or sign to a horizontal plane to the pavement surface below the signal head or sign.

A three-section signal head may be placed where a five-section signal head is shown on the INDOT Standard Drawings.

The structure should be provided with vibration mitigation devices if either of the conditions applies as follows:

1. *structure with arm length in excess of 50 ft; or*

2. *structure is located where the speed limit exceeds 35 mph and the ADT exceeds 10,000 vpd, or the ADTT exceeds 1000. ADT and ADTT are for one direction regardless of the number of lanes.*

The foundation location and type, pole height, arm length, and sign designations and messages should be shown on the plans. The true arm length should be shown from the center of the pole to the end of the arm. Such length, for pay-item-determination purposes, should be rounded to the higher 5-ft increment. The plans should show ADT and ADTT for each direction.

77-4.04(02) Design Criteria

FIRST DRAFT MINUTES PART 2

If a structure shown on the INDOT Standard Drawings cannot be used, its foundation, pole, arm, and connections should be designed utilizing the design conditions as follows:

1. *90-mph wind;*
2. *50-year service life;*
3. *Category II fatigue;*
4. *galloping considered;*
5. *truck gusts considered with 60-mph truck speed;*
6. *backplates included for signal heads; and*
7. *C_d for structure members = 1.1 for fatigue and in accordance with AASHTO Standard Specifications for Structural Supports for Highway Signs, Luminaries, and Traffic Signals, Table 3-6 for working loads.*

A signal cantilever structure should be designed for weights equal to or less than those shown in Figure 77-4J. If necessary, the combination arm can be added by including pole section 2 of either 17 in. or 24 in. dia., also designed for weights equal to or less than those shown in Figure 77-4J. Where used, the combination-arm length should be equal to or less that the length of the signal-cantilever arm.

The maximum allowable horizontal deflection of the pole should be limited to 2.5% of the structure height in accordance with AASHTO Standard Specifications for Structural Supports for Highway Signs, Luminaries, and Traffic Signals, Section 10.4.2, group 1 load combination.

77-4.~~04~~ 05 Signal Display

The traffic signal display consists of many parts including the signal head, signal face, optical unit, visors, etc. The criteria set forth in the *MUTCD* Part IV, the INDOT *Standard Specifications, and* ITE's *Equipment and Material Standards of the Institute of Transportation Engineers* should be followed when determining appropriate signal display arrangements and equipment. The following provides additional guidance for the selection of the signal display equipment:

1. Signal Head Housings. Signal head housings are made from polycarbonate (plastic).

2. Signal Faces. Section 77-5.01 presents INDOT's preferred signal face arrangements for use on State highways. It is INDOT's practice to place the signal lenses in a vertical

FIRST DRAFT MINUTES PART 2

line rather than horizontally except where overhead obstructions may limit visibility. Where protected left turns are followed by permissive left turns, the five-section signal head is the recommended arrangement choice. The *MUTCD Part* IV provides additional information on the arrangement of signal heads.

3. Lens Sizes. INDOT's preferred practice is to use only 12-in. (300 mm) lenses. INDOT specifications require the use of plastic lenses in its signal displays.

4. Signal Illumination. For signal illumination, INDOT uses Light-Emitting Diodes (LED's) for all signal indications.

5. Visors. INDOT practice is to use a visor on all signals. These visors are typically used for two purposes -- to direct the signal indication to the appropriate approaching traffic and to reduce "sun phantom." Tunnel visors provide a complete circle around the lens. Cutaway visors are partial visors, typically with the bottom cutaway. Partial visors reduce water and snow accumulation and do not let birds build nests within the visor. The decision on which visor type should be used is determined on a site-by-site basis. For Department installations, INDOT normally uses partial visors. Visors are made of the same material as the housing.

6. Louvers. Louvers are sometimes used to direct the signal indication to a specific lane. Louvers are used where several signal heads may cause confusion for the approaching driver. One example of this problem is where an intersection has its approaches at acute angles less than 90 degrees and the signal indications can be seen from both approaches. The decision on whether to use louvers depends on site conditions and will be determined on a case by case basis.

7. Optically Programmable Signals. Like louvers, optically programmable signals are designed to direct the signal indication to specific approach lanes and for specific distances. A major advantage is that they can be narrowly aligned so that motorists from other approaches cannot see the indications. Typical applications include closely spaced intersections and intersections where the approaches have acute angles. Optically programmable signals require rigid mountings to keep the indicator properly directed. The cost is higher than louvers but the improved visibility often makes them a better choice. The decision on whether to use an optically programmable signal depends on site conditions and will be determined on a case-by case basis.

FIRST DRAFT MINUTES PART 2

8. Backplates. A signal indication loses some of its contrast value when viewed against a bright sky or other intensive background lighting (e.g., advertising lighting). Backplates placed around the signal assembly enhance the signal's visibility and have been shown to provide a benefit in reducing crashes. However, backplates add weight to the signal head and can increase the effect of wind loading on the signal. The decision on whether to use backplates depends on site conditions and will be determined on a case-by-case basis.

77-5.0 TRAFFIC SIGNAL DESIGN

77-5.01 Design Criteria

In general, INDOT has adopted the *MUTCD* criteria for the placement and design of traffic and pedestrian signals. This includes, but is not limited to, signal indications, color requirements, number of lenses per signal head, number and location of signal heads, height of signal heads, location of signal supports, etc. In addition to the *MUTCD*, the INDOT *Standard Drawings*, and the references in Section 77-1.01, the following sections provide further details and information on the design of traffic signals.

Once a signal is determined to be warranted, or for complete modernization projects, the following should be considered:

1. All electrical service should be metered.

2. All parking regulations should be reviewed for a distance of at least 150 ft (45 m) from the stop line or back to any detector.

3. All signal head indications should be placed within 40 to 180 ft (12 to 55 m) from the stop line.

4. The designer should verify the necessary signal heads for the traffic movements as shown in the phase diagram.

5. All signal equipment should satisfy the lateral clearances as specified in Chapter Forty-nine for a 4R project or Chapter Fifty-five for a 3R project.

FIRST DRAFT MINUTES PART 2

6. Steel strain pole support heights are 30 ft (9.1 m) or 36 ft (11 m).

7. Preformed loop detection should be used where new pavement is constructed or pavement is to be replaced.

8. All existing signal components should be field verified.

9. Position and direction of aiming for all signal heads should be in accordance with Section 77-5.01(01).

10. The designer should provide a design that counts vehicles in each traveled lane approaching the signalized intersection (required for INDOT projects). The count loops shall be identified in the loop tagging table.

11. The values for detection setback distances shown in Figure 77-5W should be used.

12. Signal cantilever Structures, see section 77-4.04

77-5.01(01) Signal Displays

The *MUTCD* requires that there be at least two signal indications for each through approach to an intersection or other signalized location. A single indication is permitted for control of an exclusive turn lane, provided that this single indication is in addition to the minimum two for through movements. For multiple left turn lanes, one indication per lane shall be provided.

77-5.02 Placement of Signal Equipment

For the most part, the designer has limited options available in determining acceptable locations for the placement of signal pedestals, signal poles, pedestrian detectors and controller cabinets. Considering roadside safety, these elements should be placed as far back from the roadway as practical. However, due to visibility requirements, limited ~~mast-arm~~ *signal cantilever structure arm* lengths, limited right-of-way, restrictive geometrics or pedestrian requirements, traffic signal equipment often must be placed relatively close to the travelway. The designer should consider the following when determining the placement of traffic signal equipment.

FIRST DRAFT MINUTES PART 2

REVISION TO SPECIAL PROVISIONS AND STANDARD DRAWINGS

BACKUP 01. PROPOSED REVISION TO IDM CHAPTER 77.

1. Clear Zones. If practical, the placement of traffic signal equipment on new construction and reconstruction projects should meet the clear zone criteria presented in Section 49-2.0. For 3R projects, they should be located outside of the obstruction-free zone; see Section 55-5.02. New signal installation projects on existing routes or signal modernization projects are considered to be 3R projects.

2. Controller Cabinet. In determining the location of the controller cabinet, the designer should consider the following:

   a. The controller cabinet should be placed in a position so that it is unlikely to be struck by errant vehicles. It should be outside the obstruction-free zone.

   b. The controller cabinet should be located where it can be easily accessed by maintenance personnel.

   c. The controller cabinet should be located so that a technician working in the cabinet can see the signal indications in at least one direction.

   d. The controller cabinet should be located where the potential for water damage is minimized.

   e. The controller cabinet should not obstruct intersection visibility.

   f.The power service connect should be reasonably close to the controller cabinet.

3. Traffic Signal Supports. Traffic signal supports should be placed to provide the obstruction-free zone through the area where the traffic signal supports are located. However, the following exceptions will apply:

   a. Channelized Islands. Installation of signal supports in channelizing islands should be avoided, if practical. However, if a signal support must be located in a channelizing island, a minimum clearance of 30 ft (9.0 m) should be provided from all travel lanes (including turn lanes) in rural areas and in urban areas where the posted speed is greater than 45 mph (70 km/h). In urban areas where the island is bordered by a barrier curb and the posted speed is 45 mph (70 km/h) or less, a minimum clearance of 10 ft (3.0 m) should be provided from all travel lanes (including turn lanes).

FIRST DRAFT MINUTES PART 2

b. Non-Curbed Facilities (Posted Speed ≥ 50 mph (80 km/h) and ADT > 1500). Where conflicts exist such that the placement of the signal supports outside of the obstruction-free zone is impractical (e.g., conflicts with buried or utility cables), the signal supports should be located at least 10 ft (3.0 m) beyond the outside edge of the paved shoulder.

c. Non-Curbed Facilities (Posted Speed < 50 mph (80 km/h) or ADT ≤ 1500). Where conflicts exist such that the placement of the signal supports outside of the obstruction-free zone is impractical (e.g., conflicts with buried or utility cables), the signal supports should be located at least 6 ft (2.0 m) beyond the outside edge of the paved shoulder.

d. Curbed Facilities. For curbed facilities, see Section 55-5.02. For facilities with curbs less than 6 in. (150 mm) in height, see Items 3a. and 3b. above.

4. Pedestrians. If the signal pole must be located in the sidewalk, it should be placed to minimize pedestrian conflicts. In addition, the signal pole shall not be placed in a manner that will restrict a handicapped individual's access to curb ramps. Pedestrian push buttons must be conveniently located. Section 51-1.0 provides INDOT criteria for handicapped accessibility.

Founda-tion Type	*Soil Properties*	*Support*	*Arm Length, L, ft*
A	*Cohesive, Q_u = 750 lb/ft; or Sand, Friction Angle = 30 deg Bearing Capacity = 150 psf, and Coefficient of Friction = 0.3*	*Drilled Shaft*	*≤ 35*
B		*Drilled Shaft*	*35 < L ≤ 60*
C	*Cohesive, Q_u = 750 lb/ft; or Sand, Friction Angle = 30 deg Bearing Capacity = 150 psf, and Coefficient of Friction = 0.3*	*Spread Footing*	*≤ 35*
D		*Spread Footing*	*35 < L ≤ 60*

SIGNAL-CANTILEVER-STRUCTURE FOUNDATION-TYPE DETERMINATION

Figure 77-4 I

FIRST DRAFT MINUTES PART 2

Device	*Area, ft^2*	*Weight, lb*
Signal Head with Backplate, 3 Sec., Lens Dia. 12 in.	*8.7*	*35*
Signal Head with Backplate, 5 Sec., Lens Dia. 12 in.	*13.1*	*55*
Regulatory Sign, 36 in. x 30 in.	*7.5*	*19*
Street-Name Sign, 18 in. x 96 in.	*12*	*30*
Street-Name Sign, 18 in. x 132 in.	*16.5*	*41*
Mounted Camera	*1*	*20*
Top-Pole Luminaire	*2.4*	*53*

AREA AND WEIGHT OF DEVICE
TO BE MOUNTED ON SIGNAL CANTILEVER

Figure 77-4J

FIRST DRAFT MINUTES PART 2

COMMENTS AND ACTION

805-T-169 TRAFFIC SIGNALS
805-SDAC-01 thru 09 SIGNAL DUAL ARM CANTILEVERS

DISCUSSION: This item was introduced by Mr. Vancleave, and was presented by Mr. Patel who explained the need to add new standardized Dual Arm Signal Structures, and that it is necessary to meet INDOT project requirements. Mr. Patel illustrated his intentions on the White-Board, as to how it applies to the revised pay items.
Also required are revisions to the Standard Specifications section 805 and 922, as well as to the Indiana Design Manual Chapter 77.

Mr. Boruff stated that the complete revised 805 and 922 sections will be presented at next month's meeting, and those revisions will incorporate the revisions as shown and approved in this item.

Mr. Walker recommended that since this is all coming back next month, then it would make sense to withdraw this item at this time and present it in its entirety next month.

Everyone agreed and this item was subsequently withdrawn. The revisions included in this item will be presented with Mr. Boruff's proposal at the December 2012 Standards Committee meeting.

Motion: Mr. Vancleave Second: Mr. Boruff Ayes: Nays:	Action: _____ Passed as Submitted _____ Passed as Revised __X__ Withdrawn
Standard Specifications Sections affected: SECTION 805; SECTION 922 Recurring Special Provision affected: 805-T-169 and 922-T-168 Standard Sheets affected: PROPOSED NEW Design Manual Sections affected: CHAPTER 77 GIFE Sections cross-references: NONE	_____ 2014 Standard Specifications Book _____ Revise Pay Items List _____ Create RSP (No._____) Effective _____ Letting RSP Sunset Date: _____ _____ Revise RSP (No._____) Effective _____ Letting RSP Sunset Date: _____ Standard Drawing Effective _____ _____ Create RPD (No. _____) Effective _____ Letting _____ Technical Advisory GIFE Update Req'd.? Y ___ N ___ By _____ Addition or _____ Revision Frequency Manual Update Req'd? Y___N___ By _____ Addition or _____ Revision Received FHWA Approval? _____

FIRST DRAFT MINUTES PART 2