INDIANA DEPARTMENT OF TRANSPORTATION
Driving Indiana's Economic Growth

100 North Senate Avenue
Room N925
Indianapolis, Indiana 46204

PHONE: (317) 232-5502
FAX: (317) 234-5133

Mitchell E. Daniels, Jr., Governor
Michael B. Cline, Commissioner

FINAL DRAFT MINUTES

November 16, 2011 Standards Committee Meeting

(Changes to the First Draft Minutes shown double underlined and highlighted in yellow)

FINAL DRAFT MINUTES

MEMORANDUM

December 01, 2011

TO: Standards Committee

FROM: Scott Trammell, Secretary

RE: Minutes for the November 16, 2011 Standards Committee Meeting

A Standards Committee meeting was scheduled for 09:00 a.m. on November 16, 2011 in the N955 Bay Window Conference Room.
The meeting was adjourned at 11:52 a.m.

The following committee members were in attendance:

Mark Miller, Chairman
Greg Pankow, State Eng.
Dave Boruff, Traffic Admin.
Kenny Anderson*, Materials Mgmt.
Brian Zafar**, Roadway Services
Ron Heustis, Major Prgm. Mgmt.
Todd Shields***, Pvmt. Eng.
Jim Keefer, Fort Wayne Dist.
Randy Strain, Str. Services
Tom Caplinger, Prod. Crawford. Dist.

* *Proxy for Ron Walker*
** *Proxy for John Wright*
*** *Proxy for Dave Andrewski*

Also in attendance were the following:

Bren George, FHWA
Scott Trammell, Secretary
Paul Berebitsky, ICA
Charlie Holland, IPAI
Lalit Garg, INDOT
Steve Fisher, SiteManager
Tony Uremovich, INDOT
Matt Beeson, INDOT
Wendy Chiles, INDOT
Michael Prather, INDOT
Jim Reilman, INDOT
John Crist, East Jordan Iron Works, Inc. (EJIW)

The following items were listed for consideration:

A. GENERAL BUSINESS ITEMS

OLD BUSINESS

(No items on this agenda)

NEW BUSINESS

1. Approval of Minutes from October 20, 2011 meeting

Motion: Mr. Strain
Second: Mr. Pankow
Ayes: 8
Nays: 0
Absent: 1

ACTION: APPROVED AS SUBMITTED

2. Schedule of Standards Committee meetings for 2012-2013.

DISCUSSION: This item was introduced by Mr. Miller and it was mentioned that December 2011 Standards Committee meeting will be held on Wednesday, December 14 2011 but most likely will be canceled.

B. CONCEPTUAL PROPOSAL ITEMS

OLD BUSINESS

(No items were listed for consideration)

NEW BUSINESS

(No items were listed for consideration)

C. STANDARD SPECIFICATIONS, SPECIAL PROVISIONS AND STANDARD DRAWINGS PROPOSED ITEMS

OLD BUSINESS

Item No. 03 10/20/11 (2012 SS) Mr. Strain pg 07
Recurring Special Provision
737-B-188 *WELDED WIRE REINFORCEMENT*

ACTION: PASSED AS REVISED

Item No. 08 10/20/11 (2012 SS) Mr. Walker pg 13
Recurring Special Provision
910-X-XXX *WELDED WIRE REINFORCEMENT MATERIALS*

ACTION: PASSED AS REVISED

FINAL DRAFT MINUTES

Item No. 01 10/20/11 (2012 SS) Mr. Wright pg 17

910.05 Castings
910.05(A) Steel Castings
910.05(B) Iron Castings

ACTION: PASSED AS REVISED

NEW BUSINESS

Item No. 01 11/16/11 (2012 SS) Mr. Pankow pg 21

Recurring Special Provision

~~*700-X-XXX*~~ ~~*WWR USED IN REINFORCED CONCRETE BOX AND THREE-SIDED STRUCTURES*~~

714-X-XXX *WWR USED IN REINFORCED CONCRETE BOX*
723-X-XXX *WWR USED IN THREE-SIDED STRUCTURES*

ACTION: PASSED AS SUBMITTED

Item No. 02 11/16/11 (2012 SS) Mr. Strain pg 24

Recurring Special Provision

706-X-XXX *BRIDGE RAILING*

ACTION: WITHDRAWN

Item No. 03 11/16/11 (2012 SS) Mr. Andrewski pg 28

SECTION 408 SEALING CRACKS AND JOINTS

ACTION: PASSED AS SUBMITTED

Item No. 04 11/16/11 (2012 SS) Mr. Andrewski pg 32

Recurring Special Provision

411-R-432 WARRANTED MICRO-SURFACING

ACTION: PASSED AS REVISED

Item No. 05 11/16/11 (2012 SS) Mr. Boruff pg 47

Standard Drawing

807-LTST-02 ALUMINUM LIGHT POLE WITH TRANSFORMER BASE

ACTION: PASSED AS REVISED

Item No. 06 11/16/11 (2012 SS) Mr. Strain pg 53

Standard Drawings

726-BEBP-03 *BRIDGE ELASTOMERIC BEARING PADS TYPE TH1-TH4 FOR PRESTRESSED WIDE-FLANGE BULB-TEE BEAMS*

726-BEBP-0~~3~~*4* BRIDGE ELASTOMERIC BEARING PADS TYPE S – FOR STEEL BEAMS

726-BEBP-0~~4~~*5* ELASTOMERIC BEARING PADS TYPE S

FINAL DRAFT MINUTES

ACTION: PASSED AS SUBMITTED

Item No. 07 11/16/11 (2012 SS) Mr. Andrewski pg 60

Recurring Special Provision

414-X-XXX *ULTRATHIN BONDED WEARING COURSE, WARRANTED*

ACTION: PASSED AS REVISED

cc: Committee Members (11)
FHWA (2)
ICA (1)

FINAL DRAFT MINUTES

INDOT Standards Committee
Schedule of Meetings, Submittals, and Distributions

Revised 11/16/11

Standards Committee Meeting Date	Agenda Items Due[1]	Agenda Distributed & Published	First Draft Minutes Distributed	Comments Due for Draft Minutes	Final Draft Minutes Distributed	Approved Minutes Published
	(-24 days)	(-17days)	(+6 days)	(+13 days)	(+21 days)	(+35-42 days)
12/15/11	11/21/11	11/28/11	12/21/11	12/28/11	01/05/12	01/26/12
01/19/12	12/27/11	01/02/12	01/25/12	02/01/12	02/09/12	02/23/12
02/16/12	01/23/12	01/30/12	02/22/12	02/29/12	03/08/12	03/22/12
03/15/12	02/20/12	02/27/12	03/21/12	03/28/12	04/05/12	04/26/12
04/19/12	03/26/12	04/02/12	04/25/12	05/02/12	05/10/12	05/24/12
05/17/12	04/23/12	04/30/12	05/23/12	05/30/12	06/07/12	06/28/12
06/21/12	05/29/12	06/04/12	06/27/12	07/05/12	07/12/12	07/26/12
07/19/12	06/25/12	07/02/12	07/25/12	08/01/12	08/09/12	08/23/12
08/16/12	07/23/12	07/30/12	08/22/12	08/29/12	09/06/12	09/27/12
09/20/12	08/27/12	09/03/12	09/26/12	10/03/12	10/11/12	10/25/12
10/18/12	09/24/12	10/01/12	10/24/12	10/31/12	11/08/12	11/26/12
11/15/12	10/22/12	10/29/12	11/21/12	11/28/12	12/06/12	12/27/12
12/20/12	11/26/12	12/03/12	12/26/12	01/02/13	01/10/13	01/24/13
01/17/13	12/26/12	01/02/13	01/23/13	01/30/13	02/07/13	02/28/13
02/21/13	01/28/13	02/04/13	02/27/13	03/06/13	03/14/13	03/28/13
03/21/13	02/25/13	03/04/13	03/27/13	04/03/13	04/11/13	04/25/13
05/16/13[2]	03/25/13	04/01/13	04/24/13	05/01/13	05/09/13	05/23/13
05/16/13	04/22/13	04/29/13	05/22/13	05/29/13	06/06/13	06/27/13
06/20/13	05/28/13	06/03/13	06/26/13	07/03/13	07/11/13	07/25/13

FINAL DRAFT MINUTES

GENERAL BUSINESS

STANDARDS COMMITTEE MEETINGS SCHEDULE FOR 2012-2013

(continued)

07/18/13	06/24/13	07/01/13	07/24/13	07/31/13	08/08/13	08/22/13
08/15/13	07/22/13	07/29/13	08/21/13	08/28/13	09/05/13	09/26/13
09/19/13	08/26/13	09/03/13	09/25/13	10/02/13	10/11/13	10/24/13
10/17/13	09/23/13	09/30/13	10/23/13	10/30/13	11/07/13	12/02/13
11/21/13	12/02/13	11/04/13	11/27/13	12/04/13	12/12/13	12/26/13
12/19/13	11/25/13	12/02/13	12/26/13	01/02/14	01/09/14	01/23/14

Notes:
1. Agenda items must be submitted by the due date shown, and be accompanied by a Proposal sheet.
2. The May meeting is the last opportunity for approval of items to be included in September Edition as Recurring Special Provisions (2014 Standard Specifications).
3. Shaded dates are exceptions to regular schedule.

FINAL DRAFT MINUTES

Mr. Strain
Date: 11/16/11

SPECIFICATIONS, SPECIAL PROVISIONS AND DRAWINGS (OLD BUSINESS ITEM)

REVISION TO SPECIAL PROVISIONS

PROPOSAL TO STANDARDS COMMITTEE

PROBLEM(S) ENCOUNTERED: The Department is interested in procedures and materials that will accelerate the process of construction. A product which can aid the Department in this endeavor is Welded Wire Reinforcement (WWR). This product has been used in other states in prestressed concrete beams and bridge decks.

PROPOSED SOLUTION: Add a special provision for WWR to permit its substitution for reinforcing bars in bridge superstructures, reinforced concrete bridge approaches, crashwalls, and retaining walls. WWR can be used where methods of accelerating construction are desired. Suggested basis for use: pay item for reinforcing bars in work addressed in Std Spec Sections 609, 704, 706, and 707.

APPLICABLE STANDARD SPECIFICATIONS: New 737

APPLICABLE STANDARD DRAWINGS: None

APPLICABLE DESIGN MANUAL SECTION: None

APPLICABLE SECTION OF GIFE: None

APPLICABLE RECURRING SPECIAL PROVISIONS: New 737-B-xxx provision

PAY ITEMS AFFECTED: Reinforcing bars

Submitted By: Randy Strain

Title: Bridge Standard & Policy Engineer

Organization: INDOT Technical Support

Phone Number: 232-3339

Date: September 23, 2011

APPLICABLE SUB-COMMITTEE ENDORSEMENT: Ad hoc committee consisting of Kenny Anderson, Jim Reilman, Randy Strain, Tony Uremovich, and Todd Hawkinson representing the WWR industry.

FINAL DRAFT MINUTES

REVISION TO SPECIAL PROVISIONS (OLD BUSINESS ITEM)

PROPOSED NEW 737-B-188 WELDED WIRE REINFORCEMENT

737-B-188 WELDED WIRE REINFORCEMENT

(Adopted XX-XX-11)

The Standard Specifications are revised as follows:

SECTION 737, BEGIN LINE 1, INSERT AS FOLLOWS:

SECTION 737 - WELDED WIRE REINFORCEMENT, WWR

737.01 Description

This work shall consist of furnishing and placing WWR as an alternative to furnishing and placing reinforcing bars in concrete superstructures ~~structural members, bridge decks, bridge railings~~, reinforced concrete bridge approaches, crash walls, and cast-in-place retaining walls in accordance with 105.03.

MATERIALS

737.02 Materials

Materials shall be in accordance with the following:

Steel WWR, Deformed.....910.01(b)6
Steel WWR, Smooth.....910.01(b)5

CONSTRUCTION REQUIREMENTS

737.03 Design Requirements

The nominal yield strength shall be the minimum as specified for the grade of steel selected, except that the maximum nominal yield strength used for design purposes shall not exceed 75 ksi (520 MPa). The nominal yield strength shall not be less than 65 ksi (450 MPa) for smooth WWR and 70 ksi (480 MPa) for deformed WWR. The area of steel in the longitudinal and transverse directions may be reduced in proportion to the nominal yield strength specified for the grade of steel up to the maximum allowable. For purposes of crack control, spacing of reinforcement in the WWR sheet shall not be greater than 8 in. (200 mm) in either direction.

If the plans show uncoated reinforcing bars, the Contractor shall use uncoated WWR. If the plans show epoxy coated reinforcing bars, the Contractor may elect to supply either epoxy coated or galvanized WWR.

737.04 Working Drawings

Working drawings shall be submitted for approval in accordance with 105.02. Fabrication shall not begin until the working drawings are approved.

737.05 Fabrication

FINAL DRAFT MINUTES

WWR shall be cut and bent to the shapes shown on the working drawings. All WWR shall be cold bent, unless otherwise permitted by the Engineer. Hook dimensions and diameters of bends shall be as shown on the working drawings. WWR partially embedded in concrete shall not be field bent, except as shown on the approved working drawings or permitted by the Engineer. Coated WWR shall not be field cut, unless permitted by the Engineer. If permitted, field cutting of coated WWR shall be performed using hydraulic-powered or friction cutting tools to minimize coating damage and field touch-up. Field cut coated WWR shall be repaired with compatible patching material that is deemed suitable for repairs in the field. Flame cutting of coated WWR will not be permitted.

737.06 Handling and Storage

All WWR shall be handled and stored by methods that will not damage the coating or WWR, and in accordance with the applicable requirements of 703.04. Bundles shall not be dropped or dragged. WWR shall be transported and stored so as to not damage the applied coating. The coated WWR shall not be exposed to fire or flame.

Prior to placement of concrete, all WWR shall be free from dirt, loose rust or scale, mortar, paint, grease, oil, or other materials that can reduce bond. Coated WWR shall be free from cracks or laminations. For ~~non-~~uncoated WWR, bonded rust, surface irregularities, or mill scale will not be cause for rejection, provided the minimum dimensions, cross sectional area, and tensile properties of the WWR specimen satisfy the physical requirements for the size and grade of WWR specified.

737.07 Placing and Securing

WWR shall be placed as shown on the approved working drawings and held in position during the placing and finishing of concrete. WWR shall be lapped and tied around the perimeter of each sheet in order to maintain proper positioning of the WWR. Lap splices shall have a minimum of two ties per spliced length. Unless otherwise shown on the approved working drawings, WWR sheets shall overlap a minimum of 8 in. (200 mm) in each direction to make a splice. Plastic or wire bar supports, such as chairs and bolsters, shall be in accordance with the requirements herein and industry practice as described in the Wire Reinforcing Institute, WRI, WWR-500, Manual of Standard Practice~~, or TF 702, Supporting WWR~~. All metal bolsters or chairs which bear against the forms for exposed surfaces shall be equipped with snug fitting, high density, polyethylene tips which provide 1/2 in. (13 mm) minimum clearance between the metal and an exposed surface. The spacing of slab bolster rows and high chair rows for deck slabs shall be as described in the WRI WWR-500, Manual of Standard Practice~~, or TF 702, Supporting WWR~~ unless otherwise directed. For epoxy-coated WWR, tie wires, chair and bar supports, and metal clips shall be epoxy, plastic, or nylon coated. For galvanized WWR, tie wires, chair and bar supports, and metal clips shall be plastic coated or hot dipped galvanized after fabrication in accordance with ASTM A 1060. Tie-down bars shall be placed as shown on the approved working drawings. With the exception of tie-down bars, tack welding will not be permitted, unless shown on the approved working drawings.

FINAL DRAFT MINUTES

WWR shall be supported in its specified position by use of plastic or wire bar supports, supplementary tie-down bars, side-form spacers, or other approved devices. Such devices shall be placed at intervals so as to maintain the WWR cover as shown on the approved working drawings. Platforms for the support of workers and equipment during concrete placement shall be supported directly by the forms and shall not alter the positioning of the WWR.

737.08 Repair of Coated WWR

All damaged, cut, or otherwise compromised areas of the coating shall be repaired.

(a) Epoxy-Coated

In addition to the requirements of ASTM ~~D 3963~~A 884, all visible damage, ~~i.e.~~including but not limited to scratches, nicks~~,~~ and cracks~~,~~ to the epoxy coating caused during shipment, storage, or placement shall be repaired on the project site with approved patching material. Ends of WWR that have been sheared, sawed, or cut by other means shall be coated with approved patching material. Areas on the WWR sheets and tie-down bars damaged due to welding shall be repaired with approved patching material. Patching of damaged areas shall be performed in accordance with the patching material manufacturer's recommendations. If the damaged surface area exceeds 10% of the total WWR sheet surface area, the sheet shall be removed and replaced with an acceptable sheet. All patching material shall be fully cured prior to placing concrete. Patching material shall be compatible with the epoxy coating, deemed inert in concrete, and deemed suitable for repairs in the field. Patching material shall be identified on the container as satisfying ASTM ~~D 3963~~A 775, Annex A~~1~~2, or shall be accompanied by a type C certification in accordance with 916 certifying that the material satisfies or exceeds the requirements of Annex A~~1~~2.

(b) Galvanized

All visible damage, ~~i.e.~~including but not limited to scratches, nicks~~,~~ and cracks~~,~~ to the galvanized coating caused during shipment, storage, or placement shall be repaired on the project site in accordance with ASTM A 1060. Ends of WWR that have been sheared, sawed, or cut by other means shall be coated. Areas on the WWR sheets and tie-down bars damaged due to welding shall be repaired and recoated. Field coating of damaged areas shall be performed in accordance with the coating manufacturer's recommendations. ~~Zinc~~Galvanized coating shall be in accordance with ASTM A 1060. It shall be applied to achieve a dry film equal to or exceeding that designated in ASTM A 1060. All touchup coating material shall be fully cured prior to placing concrete.

737.09 Final Inspection

After being placed, WWR shall be subject to approval of the Engineer before beginning concrete placement. Concrete placed prior to approval of the WWR will be subject to rejection and removal.

FINAL DRAFT MINUTES

REVISION TO SPECIAL PROVISIONS (OLD BUSINESS ITEM)

PROPOSED NEW 737-B-188 WELDED WIRE REINFORCEMENT

737.10 Method of Measurement

This work will not be measured for payment.

737.11 Basis of Payment

The accepted quantity for payment will be the quantity for reinforcing bars or epoxy-coated reinforcing bars shown on the plans. This work will be paid for as reinforcing bars or epoxy-coated reinforcing bars in accordance with 703.08, regardless of whether the WWR design results in a reinforcement weight (mass) that is different from that shown on the plans.

If reinforcing bars or epoxy-coated reinforcing bars are not paid for separately, but instead included in the cost of a pay item, and WWR is substituted for reinforcing bars or epoxy-coated reinforcing bars, the WWR will not be paid separately, but shall be included in the cost of the pay item.

If galvanized WWR is supplied, it will be paid for as epoxy-coated reinforcing bars.

The cost of tie wires, chair and bar supports, metal clips, spacers, or other mechanical means used for fastening or holding WWR in place, and laps shall be included in the cost of WWR. The cost of epoxy-coating materials or galvanizing materials and repair of damaged or removed coating materials on WWR and on tie wires, chair and bar supports, metal clips, spacers, or other mechanical means used for fastening or holding WWR in place, and laps shall be included in the cost of WWR.

FINAL DRAFT MINUTES

COMMENTS AND ACTION (OLD BUSINESS ITEM)

737-B-188 WELDED WIRE REINFORCEMENT

DISCUSSIONS: Mr. Strain introduced this item and it was presented and explained by Mr. Reilman. Mr. Reilman pointed out the editorial revisions to the document as shown in these minutes.

Mr. Heustis recommended adding the explanation that WWR means Welded Wire Reinforcement. However upon further review, the definition for WWR is shown in section 101.01 of the Standard Specifications. Mr. Heustis also questioned the need for the reference to TF-702. Mr. Strain said he is in favor of striking that reference. Further edits were suggested and agreed.

This item then passed as revised. Further discussion and explanation was provided by Mr. Strain as to where the WWR could be utilized. The Basis for Use can be written to exclude use in structural beams, and substructures. Mr. Keefer suggested following the language shown on the proposal page, which makes the language read more positively. Mr. Strain concurred.

Mr. Pankow clarified that the use of WWR would be caught during shop drawing review, and the determination can be made at that time whether or not to allow its use.

Mr. Heustis recommended that the contents of this RSP be incorporated in section 703 of the 2014 Standard Specifications, instead of creating a new section. All concurred.

Motion: Mr. Strain Second: Mr. Boruff Ayes: 8 Nays: 0 Absent: 1	Action: ____ Passed as Submitted _X_ Passed as Revised ____ Withdrawn
Standard Specifications Sections affected: NONE Recurring Special Provision affected: NONE Standard Sheets affected: NONE Design Manual Sections affected: NONE GIFE Sections cross-references: NONE	_X_ 2014 Standard Specifications Book ____ Revise Pay Items List _X_ Create RSP (No. 737-B-188) Effective April 01, 2012 Letting RSP Sunset Date: 2014 Book ____ Revise RSP (No.____) Effective ____Letting RSP Sunset Date: ____ Standard Drawing Effective ____ ____ Create RPD (No. ____) Effective ____Letting ____ Technical Advisory GIFE Update Req'd.? Y ___ N ___ By ____ Addition or ____ Revision Frequency Manual Update Req'd? Y___N___ By ____ Addition or ____ Revision Received FHWA Approval? Yes

FINAL DRAFT MINUTES

SPECIFICATIONS, SPECIAL PROVISIONS AND DRAWINGS (OLD BUSINESS ITEM)

REVISION TO SPECIAL PROVISIONS

PROPOSAL TO STANDARDS COMMITTEE

PROBLEM(S) ENCOUNTERED: ASTMs A82, A185, A496 and A497 have been made obsolete by ASTM A1064. In addition, it has been decided to allow epoxy coated or galvanized WWR in some applications. These ASTMs have been referenced by 901.01(b)5 and 901.01(b)6.

PROPOSED SOLUTION: Create a new RSP effective for any contract. The material is referenced in 616, 708, 714, 723, 731, 734, 735 and the proposed 737 RSP. Changes to 901.01(b)5 and 901.01(b)6 will support the desired material for RSP 737 and make current the material specifications for WWR in the above sections of the Standard Specifications.

APPLICABLE STANDARD SPECIFICATIONS: 910.01(b)5, 910.01(b)6

APPLICABLE STANDARD DRAWINGS: None affected

APPLICABLE DESIGN MANUAL SECTION: None affected

APPLICABLE SECTION OF GIFE: None affected

APPLICABLE RECURRING SPECIAL PROVISIONS: None affected

PAY ITEMS AFFECTED: None affected

Submitted By: Ron Walker

Title: Manager, Office of Materials Management

Organization: INDOT

Phone Number: 610-7251

Date: 10/25/2011

APPLICABLE SUB-COMMITTEE ENDORSEMENT: Ad hoc committee consisting of Kenny Anderson, Jim Reilman, Randy Strain, Tony Uremovich, and Todd Hawkinson representing the WWR industry.

FINAL DRAFT MINUTES

REVISION TO SPECIAL PROVISIONS (OLD BUSINESS ITEM)

PROPOSED NEW 910-X-XXX WELDED WIRE REINFORCEMENT MATERIALS

910-X-XXX WELDED WIRE REINFORCEMENT MATERIALS

(Adopted XX-XX-XX)

The Standard Specifications are revised as follows:

SECTION 910, LINE 50, DELETE AND INSERT AS FOLLOWS:

5. Steel ~~Welded Wire Reinforcement~~ *WWR*, Smooth

Smooth steel ~~welded wire reinforcement~~ *WWR* shall be in accordance with ASTM ~~A 185~~ *A 1064*, except as follows~~.~~*:*

a. The wire used in manufacturing the ~~welded wire reinforcement~~ *WWR* shall be ~~as~~ drawn, not galvanized, unless otherwise specified.

b. ~~The welded wire reinforcement~~ *WWR* shall be furnished in flat sheets. ~~unless otherwise permitted or specified~~.

c. ~~Weld shear tests of welded wire reinforcement shall be performed by the manufacturer on the test specimens obtained for testing tensile properties in accordance with the Frequency Manual. If there is weld shear failure, additional test specimens shall be tested in accordance with ASTM A 185~~. *When epoxy-coated WWR is specified, it shall receive a type 1 coating in accordance with ASTM A 884. Repairing or patching of the coating shall be in accordance with ASTM A 884 with the patching material in accordance with ASTM A 775 Annex A2. The average coating thickness shall be 9 to 14 mils (225 to 350 µm) after cure.*

d. When galvanized WWR is specified, it shall be in accordance with ASTM A 1060, including repair or renovation of the coating. It shall be coated after fabrication.

6. Steel ~~Welded Wire Reinforcement~~ *WWR*, Deformed

Deformed steel ~~welded wire reinforcement~~ *WWR* shall be in accordance with ASTM ~~A 497~~ *A 1064*, except as follows~~.~~*:*

a. The wire used in manufacturing the ~~welded wire reinforcement~~ *WWR* shall be ~~in accordance with ASTM A 496~~*drawn, not galvanized, unless otherwise specified*.

b. ~~The welded wire reinforcement~~ *WWR* shall be furnished in flat sheets. ~~unless otherwise specified or permitted.~~

FINAL DRAFT MINUTES

REVISION TO SPECIAL PROVISIONS (OLD BUSINESS ITEM)

PROPOSED NEW 910-X-XXX WELDED WIRE REINFORCEMENT MATERIALS

c. ~~Weld shear tests of welded wire reinforcement shall be performed by the manufacturer on the test specimens obtained for testing tensile properties in accordance with the Frequency Manual. If there is shear failure, additional test specimens shall be tested in accordance with ASTM A 497~~. *When epoxy-coated WWR is specified, it shall receive a type 1 coating in accordance with ASTM A 884. Repairing or patching of the coating shall be in accordance with ASTM A 884 with the patching material in accordance with ASTM A 775 Annex A2. The average coating thickness shall be 9 to 14 mils (225 to 350 µm) after cure.*

d. When galvanized WWR is specified, it shall be in accordance with ASTM A 1060, including repair or renovation of the coating. It shall be coated after fabrication.

FINAL DRAFT MINUTES

COMMENTS AND ACTION (OLD BUSINESS ITEM)

910-X-XXX WELDED WIRE REINFORCEMENT MATERIALS

DISCUSSIONS: Mr. Anderson introduced this item. Further editorial revisions were made by Mr. Reilman which were incorporated as shown highlighted above. Mr. Anderson added that these revisions are for clarification of the ASTM standards.

The motion was then revised. This RSP is in conjunction with RSP 737-B-188. The Basis for Use is All Contracts.

Motion: Mr. Anderson Second: Mr. Strain Ayes: 8 Nays: 0 Absent: 1	Action: ____ Passed as Submitted _X_ Passed as Revised ____ Withdrawn
Standard Specifications Sections references: Sections: 606 pg 382; 608 pg 385; 616 pg 402, 403, 406; 708 pg 542, 544; 703 pg 518, 519; 707 pg 540, 542; 714 pg 588; 723 pg 649, 650; 731 pg 676; 734 pg 687, 688; 735 pg 691; 910 pg 872, 881. Recurring Special Provision affected: NONE Standard Sheets affected: NONE Design Manual Sections affected: NONE GIFE Sections cross-references: NONE	_X_ 2014 Standard Specifications Book ____ Revise Pay Items List _X_ Create RSP (No.910-R-591) Effective April 01, 2012 Letting RSP Sunset Date: 2014 Book ____ Revise RSP (No.____) Effective ____Letting RSP Sunset Date: ____ Standard Drawing Effective ____ ____ Create RPD (No. ____) Effective ____Letting ____ Technical Advisory GIFE Update Req'd.? Y ___ N ___ By ____ Addition or ____ Revision Frequency Manual Update Req'd? Y___N___ By ____ Addition or ____ Revision Received FHWA Approval? Yes

FINAL DRAFT MINUTES

SPECIFICATION REVISIONS (OLD BUSINESS ITEM)

REVISION TO STANDARD SPECIFICATIONS

PROPOSAL TO STANDARDS COMMITTEE

PROBLEM(S) ENCOUNTERED: A foundry company that produces castings that are used on INDOT construction projects has claimed that similar castings produced by another foundry company, which also supplies castings that are used on INDOT projects, do not meet the INDOT weight requirements set forth in Standard Specifications Section 910.05(b).

The Specifications do not state a specific common weight that each similar type of casting should use as a basis for comparison of all casting producers' products. The statement regarding casting weight in the Specifications refers to the allowable weight variations of all of the same type of casting produced by each individual producer, not the common allowable weight variation for each similar type of casting produced by all the different casting producers.

PROPOSED SOLUTION: Revise Section 910.05 as attached.

APPLICABLE STANDARD SPECIFICATIONS: 910

APPLICABLE STANDARD DRAWINGS: None

APPLICABLE DESIGN MANUAL SECTION: N/A

APPLICABLE SECTION OF GIFE: N/A

APPLICABLE RECURRING SPECIAL PROVISIONS: N/A

Submitted By: John Wright

Title: Highway Design and Technical Support Director

Organization: INDOT

Phone Number: 232-5147

Date: September 9, 2011

APPLICABLE SUB-COMMITTEE ENDORSEMENT?

FINAL DRAFT MINUTES

REVISION TO STANDARD SPECIFICATIONS (OLD BUSINESS ITEM)

SECTION 910 – METAL MATERIALS
910.05 CASTINGS
910.05(a) STEEL CASTINGS
910.05(b) IRON CASTINGS

The Standard Specifications are revised as follows:

SECTION 910, BEGIN LINE 376, DELETE AND INSERT AS FOLLOWS:

910.05 Castings

The casting design shall be proof loaded to 40,000 *lbs* (178 kN) in accordance with ~~Federal Specifications FF-F-621~~*AASHTO M 306*. Castings shall be in accordance with the plan dimensions and to the following requirements for the designated materials. A certified inspection report shall be submitted by the manufacturer with each shipment of castings, except as otherwise provided herein. Inspection and testing shall be done by the manufacturer. The certified inspection report shall list the casting date, casting number, and the type of material, such as gray iron, ductile iron, etc. It shall state that inspection and testing has been performed, that all parts shipped meet the pertinent specification requirements, and that all component parts fit. The supporting test results, including proof load data, shall be retained and be available on request for a period of 7 years. All castings shall have the manufacturer's identification and the date of manufacture cast on an exposed surface. Acceptance of castings will be based on the certified inspection report, visual inspection, and check measurements.

(a) Steel Castings

Chromium alloy steel castings shall be in accordance with ASTM A 743 (A 743M). Grade CA 15 shall be furnished unless otherwise specified.

(b) Iron Castings

Iron casting shall be gray iron castings in accordance with ASTM A 48, class No. 35B, unless otherwise specified. Tension tests will be required for all castings including drainage castings.

Castings shall be true to pattern in form and dimensions. A tolerance of ± 1/8 in. (± 3 mm) in general dimensions as shown on the plans will be permitted with the exception that the tolerance in the dimensions of grates or covers and the openings into which they fit shall be limited to ± 1/16 in. (2 mm). ~~All~~*Each* casting~~s~~ shall weigh at least 95% of the *manufacturer's* specified weight (mass) of ~~that~~*the* type *specified* ~~*for its specific type as stated by the manufacturer*~~*and shall be* cast to the ~~exact~~ dimensions shown on the plans. They shall be free from sponginess, cracks, blowholes, warping, sand inclusions, cold shots, cold shuts, chilled iron shrinks, or any defects which would affect the strength and value for the intended purpose. The castings shall completely fill the molds and shall not be removed until properly cooled. The casting date and a casting code number shall be cast on each casting.

All corners of the castings shall be filleted and outside corners and edges shall be rounded to a radius of not less than 1/8 in. (3 mm). All contact surfaces between different castings shall present a firm and even bearing without rattling or rocking. The lid frame

FINAL DRAFT MINUTES

REVISION TO STANDARD SPECIFICATIONS (OLD BUSINESS ITEM)

SECTION 910 – METAL MATERIALS
910.05 CASTINGS
910.05(a) STEEL CASTINGS
910.05(b) IRON CASTINGS

bearing surfaces on all round castings shall be machine milled to provide true bearings around the entire circumference. All other contact surfaces shall be ground.

All castings shall be cleaned of molding or core sand, rust, scale, and foreign material just prior to shipment. Iron castings shall be delivered unpainted.

FINAL DRAFT MINUTES

COMMENTS AND ACTION (OLD BUSINESS ITEM)

910-X-XXX WELDED WIRE REINFORCEMENT MATERIALS

DISCUSSIONS: Mr. Zafar introduced this item and explained the revisions contained therein and as described in the proposal sheet. Mr. Zafar then reiterated the content of section 910.05, which leads to the revisions shown to clarify the weight requirements of 910.05 (b).

Mr. Keefer requested clarification of the intent of this proposal, which was provided by Mr. Heustis. Mr. Heustis also offered further clarification of the proposed language.

Mr. Crist of East Jordan Iron Works clarified, from the manufacturer's point of view that the weights will indeed be within the 95% requirement.

Motion: Mr. Zafar Second: Mr. Anderson Ayes: 8 Nays: 0 Absent: 1	Action: ____ Passed as Submitted __X__ Passed as Revised ____ Withdrawn
Standard Specifications Sections affected: 910.05 pg 879 and 880. Recurring Special Provision affected: NONE Standard Sheets affected: NONE Design Manual Sections affected: NONE GIFE Sections cross-references: NONE	__X__ 2014 Standard Specifications Book ____ Revise Pay Items List __X__ Create RSP (No. 910-R-592) Effective April 01, 2012 Letting RSP Sunset Date: 2014 Book ____ Revise RSP (No.____) Effective ____Letting RSP Sunset Date: _____ Standard Drawing Effective _____ _____ Create RPD (No. _____) Effective ____Letting _____ Technical Advisory GIFE Update Req'd.? Y ___ N ___ By _____ Addition or _____ Revision Frequency Manual Update Req'd? Y___N___ By _____ Addition or _____ Revision Received FHWA Approval? Yes

FINAL DRAFT MINUTES

SPECIFICATIONS, SPECIAL PROVISIONS AND DRAWINGS

REVISION TO SPECIAL PROVISIONS

PROPOSAL TO STANDARDS COMMITTEE

PROBLEM(S) ENCOUNTERED: ASTM updates have resulted in the need to update the WWR 910.01 references. This has now created a conflict with the WWR language contained in 714.02 & 723.02.

PROPOSED SOLUTION: Adopt the proposed deletions to the 714.02 and 723.02 sections in order to eliminate the conflict.

APPLICABLE STANDARD SPECIFICATIONS: 714.02 and 723.02

APPLICABLE STANDARD DRAWINGS: None

APPLICABLE DESIGN MANUAL SECTION: None

APPLICABLE SECTION OF GIFE: None

APPLICABLE RECURRING SPECIAL PROVISIONS: create new 700-x-xxx recurring special provision

PAY ITEMS AFFECTED: None

Submitted By: Greg Pankow

Title: State Construction Engineer

Organization: INDOT

Phone Number: 2-5502

Date: October 25, 2011

APPLICABLE SUB-COMMITTEE ENDORSEMENT: None

FINAL DRAFT MINUTES

REVISION TO SPECIAL PROVISIONS

PROPOSED NEW ~~700-X-XXX WWR USED IN REINFORCED CONCRETE BOX AND THREE-SIDED STRUCTURES~~ *(SEE COMMENTS AND ACTION)*
714-X-XXX WWR USED IN REINFORCED CONCRETE BOX
723-X-XXX WWR USED IN THREE-SIDED STRUCTURES

~~700-X-XXX WWR USED IN REINFORCED CONCRETE BOX AND THREE-SIDED STRUCTURES~~
714-R-XXX WWR USED IN REINFORCED CONCRETE BOX STRUCTURES

(Adopted xx-xx-xx)

The Standard Specifications are revised as follows:

SECTION 714, BEGIN LINE 68, DELETE AS FOLLOWS:

Unless otherwise specified herein, reinforcement may consist of either reinforcing bars or WWR. If specified to be coated, WWR shall be coated with either galvanized coating or epoxy coating, and reinforcing bars shall be coated with epoxy coating. ~~Epoxy coated WWR shall be coated with Type I coating with Class A minimum coating thickness in accordance with ASTM A 884. Galvanized WWR shall be coated in accordance with ASTM A 123 and shall have a minimum coating grade of 35.~~ For WWR, material with minimum yield strength of 65 ksi (448 MPa) shall be used.

723-R-XXX WWR USED IN THREE-SIDED STRUCTURES

(Adopted xx-xx-xx)

The Standard Specifications are revised as follows:

SECTION 723, BEGIN LINE 72, DELETE AS FOLLOWS:

Unless otherwise specified herein, reinforcement may consist of either reinforcing bars or welded wire reinforcement, WWR. If specified to be coated, WWR shall be coated with either galvanized coating or epoxy coating, and reinforcing bars shall be coated with epoxy coating. ~~Epoxy coated WWR shall be coated with Type I coating with Class A minimum coating thickness in accordance with ASTM A 884. Galvanized WWR shall be coated in accordance with ASTM A 123 and shall have a minimum coating grade of 35.~~ For WWR, material with minimum yield strength of 65 ksi (448 MPa) shall be used.

FINAL DRAFT MINUTES

COMMENTS AND ACTION

714-X-XXX WWR USED IN REINFORCED CONCRETE BOX
723-X-XXX WWR USED IN THREE-SIDED STRUCTURES

DISCUSSIONS: Mr. Pankow introduced this item and explained that this is to clarify ASTM updates.

Mr. Reilman further explained that this revision is to clean up the requirements to match ASTM specifications.

Mr. Heustis recommended that the Basis for Use needs to be for all contracts. Mr. Reilman suggested it be for all contracts with 714 or 723 pay items. Mr. Caplinger was concerned with the numbering of this RSP, and how it may apply to a particular design.

Following a brief discussion, it was agreed to generate two separate Recurring Special Provisions, one for 714 and one for 723, with no changes to the proposed revisions.

Motion: Mr. Pankow Second: Mr. Strain Ayes: 8 Nays: 0 Absent: 1	Action: _X_ Passed as Submitted ____ Passed as Revised ____ Withdrawn
Standard Specifications Sections references: 714.02 pg 589; 723.02 pg 650. Recurring Special Provision affected: NONE Standard Sheets affected: NONE Design Manual Sections affected: NONE GIFE Sections cross-references: NONE	_X_ 2014 Standard Specifications Book ____ Revise Pay Items List _X_ Create RSP (No. 714-R-588 and 723-R-589) Effective April 01, 2012 Letting RSP Sunset Date: 2014 book ____ Revise RSP (No.____) Effective ____Letting RSP Sunset Date: ____ Standard Drawing Effective ____ ____ Create RPD (No. ____) Effective ____Letting ____ Technical Advisory GIFE Update Req'd.? Y ___ N ___ By ____ Addition or ____ Revision Frequency Manual Update Req'd? Y___N___ By ____ Addition or ____ Revision Received FHWA Approval? Yes

FINAL DRAFT MINUTES

SPECIFICATIONS, SPECIAL PROVISIONS AND DRAWINGS

REVISION TO SPECIAL PROVISIONS

PROPOSAL TO STANDARDS COMMITTEE

PROBLEM(S) ENCOUNTERED: There has been some confusion regarding, method of measurement, basis of payment and pay items for some of the various bridge railing types.

PROPOSED SOLUTION: Create the appropriate pay items to have a pay item for every allowable bridge rail type. Also, better identify the method of measure and basis of payment for some of the bridge railing types.

APPLICABLE STANDARD SPECIFICATIONS: 706

APPLICABLE STANDARD DRAWINGS: None

APPLICABLE DESIGN MANUAL SECTION: 17-5.01(04)

APPLICABLE SECTION OF GIFE: None

APPLICABLE RECURRING SPECIAL PROVISIONS: create new 706-x-xxx recurring special provision

PAY ITEMS AFFECTED: obsolete 4 pay items that refer to concrete railing by the class of concrete (706-51020, 706-51025, 706-94947, and 706-92612).
Create 5 new pay items to pay for the steel portion of the PF, PS, and TF series of railing and create 1 new pay item to pay for the concrete portion of the CF railing.

Submitted By: Randy Strain

Title: Bridge Standard & Policy Engineer

Organization: INDOT

Phone Number: 232-3339

Date: October 25, 2011

APPLICABLE SUB-COMMITTEE ENDORSEMENT: Ad hoc committee consisting of: Jim Reilman, Randy Strain, and Tony Uremovich

FINAL DRAFT MINUTES

REVISION TO SPECIAL PROVISIONS

PROPOSED NEW 706-X-XXX BRIDGE RAILING

706-X-XXX BRIDGE RAILING

(Adopted XX-XX-XX)

The Standard Specifications are revised as follows:

SECTION 706, BEGIN LINE 64, DELETE AND INSERT AS FOLLOWS:

~~All c~~*C*oncrete bridge railing~~s~~ *types FC and FT* shall be reflectorized in accordance with 602.03(f).

SECTION 706, BEGIN LINE 105, DELETE AND INSERT AS FOLLOWS:

706.06 Method of Measurement

Concrete railing, including all concrete work above the top of curb, will be measured by the linear foot (meter) ~~or by the cubic yard (cubic meter)~~ in accordance with the dimensions shown on the plans. No deductions will be made for reinforcing bars or joints. Concrete bridge railing transition will be measured per each for the type specified.

~~Reinforced concrete moment slabs will be measured by the square yard (square meter) for the thickness specified. Underdrains for MSE walls placed under moment slabs will be measured in accordance with 718.09. Type D-1 contraction joints will be measured in accordance with 503.07.~~

Reinforcing bars in the railing will be measured in accordance with 703.07.

Barrier delineators will be measured in accordance with 602.05.

Steel railing will be measured by the linear foot (meter) in accordance with the dimensions shown on the plans or as directed.

Where a bridge railing type includes both a concrete component and a steel component, both the concrete component and steel component will be measured separately as described in this section. The measurement of the steel component will include the steel railing portions that are mounted to the concrete bridge railing transition.

Linear measurements will be made from end to end of the railing along the centerline *of the railing*.

Reinforced concrete moment slabs will be measured by the square yard (square meter) for the thickness specified. Underdrains for MSE walls placed under moment slabs will be measured in accordance with 718.09. Type D-1 contraction joints will be measured in accordance with 503.07.

706.07 Basis of Payment

The accepted quantities of concrete railing will be paid for at the contract price per linear foot (meter)~~ or cubic yard (cubic meter)~~, for railing, concrete, of the type

FINAL DRAFT MINUTES

REVISION TO SPECIAL PROVISIONS

PROPOSED NEW 706-X-XXX BRIDGE RAILING

specified. *Concrete bridge railing transitions will be paid for at the contract unit price per each for the type specified. Reinforcing bars for concrete railings and concrete bridge railing transitions will be paid for in accordance with 703.08. Barrier delineator will be paid for in accordance with 602.06.* Steel railing will be paid for at the contract unit price per linear foot (meter) of the type specified. *Where a bridge railing type includes both a concrete component and a steel component, both the concrete component and steel component will be paid for separately by each component as described in this section.* ~~Concrete bridge railing transitions will be paid for at the contract unit price per each for the type specified.~~ Reinforced concrete moment slabs will be paid for at the contract unit price per square yard (square meter) for the thickness specified, complete in place. Underdrains for MSE walls placed under moment slabs will be paid for in accordance with 718.10. Type D-1 contraction joints will be paid for in accordance with 503.08. ~~Reinforcing bars for concrete railings and concrete bridge railing transitions will be paid for in accordance with 703.08. Barrier delineator will be paid for in accordance with 602.06.~~

SECTION 706, BEGIN LINE 147, DELETE AND INSERT AS FOLLOWS:

~~Railing, Steel ____ type .....LFT (m)~~

Railing, Concrete, ____ type .....LFT (m) ~~CYS (m3)~~

Railing, Steel, ____ type .....LFT (m)

SECTION 706, AFTER LINE 156, INSERT AS FOLLOWS:

The costs of anchor bolts, base plates, posts, rail elements, connecting hardware, and other incidentals necessary to complete the installation of the railing as shown on the plans shall be included in the cost of railing, steel, of the type specified.

FINAL DRAFT MINUTES

COMMENTS AND ACTION

706-X-XXX BRIDGE RAILING

Mr. Strain withdrew this item.

Motion: Second: Ayes: Nays:	Action: ____ Passed as Submitted ____ Passed as Revised __X__ Withdrawn
Standard Specifications Sections references: SECTION 706 begins pg 525. Recurring Special Provision affected: NONE Standard Sheets affected: NONE Design Manual Sections affected: SECTION 17-5.01(04) GIFE Sections cross-references: NONE	____ 20__ Standard Specifications Book ____ Revise Pay Items List ____ Create RSP (No.____) Effective ____Letting RSP Sunset Date: ____ ____ Revise RSP (No.____) Effective ____Letting RSP Sunset Date: ____ Standard Drawing Effective ____ ____ Create RPD (No. ____) Effective ____Letting ____ Technical Advisory GIFE Update Req'd.? Y ___ N ___ By ____ Addition or ____ Revision Frequency Manual Update Req'd? Y___N___ By ____ Addition or ____ Revision Received FHWA Approval? ____

FINAL DRAFT MINUTES

SPECIFICATIONS, SPECIAL PROVISIONS AND DRAWINGS

REVISION TO SPECIFICATIONS

PROPOSAL TO STANDARDS COMMITTEE

PROBLEM(S) ENCOUNTERED: INDOT's warranted micro-surface special provision 411.06 Preparation of Surfaces currently states the contractor shall be responsible for all surface preparation that may affect the performance of to meet the requirements for the warranted micro-surfacing including, but not limited to compatibility of crack sealing materials when the contract includes crack sealing prior to micro-surfacing. Our qualified contractors believe the most compatible crack sealant with micro-surfacing is the fiberized crack sealant. The contractors feel they are left with an INDOT approved crack sealant that is not very compatible with micro-surfacing. They wish to be able to certify the fiber added to the AC so that it will show up on the approved products list and not interfere with final payment of the crackseal. Current contracts have a separate item for the crack sealing and fibers are technically not allowed per the current specifications.

PROPOSED SOLUTION: Revise Standard Specification Section 408- Sealing Cracks and Joints to allow the use of fibers in crack sealing for use in conjunction with microsurface treatments only.

APPLICABLE STANDARD SPECIFICATIONS: Section 408- Sealing Cracks & Joints

APPLICABLE STANDARD DRAWINGS: N/A

APPLICABLE DESIGN MANUAL SECTION:

APPLICABLE SECTION OF GIFE: Unknown

APPLICABLE RECURRING SPECIAL PROVISIONS:

Submitted By: Dave Andrewski

Title: Manager, Office of Pavement Engineering

Organization: INDOT

Phone Number: 317-232-5452

Date: May 10, 2011

APPLICABLE SUB-COMMITTEE ENDORSEMENT?
This revision was done with a small committee consisting of Todd Shields, Mike Prather, Jeremy VanVleet, Matt Beeson and Bill Tompkins. Our qualified contractors were invited to comment. .

FINAL DRAFT MINUTES

(Proposed changes shown as highlighted in gray)

SECTION 408 – SEALING CRACKS AND JOINTS

408.01 Description

This work shall consist of sealing longitudinal and transverse cracks and joints in existing asphalt pavement in accordance with 105.03.

MATERIALS

408.02 Materials

Materials shall be in accordance with the following:

Asphalt Binder for Crack Sealing, PG 64-22*.....902.01(a)
Asphalt Emulsion for
Crack Sealing, AE-90, AE-90S, AE-150.....902.01(b)
Fine Aggregates, No. 23 or 24 904
Joint Sealing Materials.....906.02

** Polypropylene fibers shall be used only in conjunction with ~~a Microsurface treatment~~warranted micro-surfacing.*

CONSTRUCTION REQUIREMENTS

408.03 Equipment

A distributor in accordance with 409.03 shall be used when crack sealing and an indirect-heat double boiler kettle with mechanical agitator shall be used when routing and filling. Air compressors shall be capable of producing a minimum air pressure of 100 psi (690 kPa).

408.04 Weather Limitations

Sealing or filling operations shall not be conducted on a wet surface, when the ambient temperature is below 40°F (4°C), or when other unsuitable conditions exist, unless approved by the Engineer.

408.05 Routing and Filling Cracks and Joints

Cracks and joints shall be routed when specified, with a routing machine capable of cutting a uniform shape to form a reservoir not exceeding 3/4 in. (19 mm) wide with a minimum depth of 3/4 in. (19 mm). The operation shall be coordinated such that routed materials do not encroach on pavement lanes carrying traffic and all routed materials are disposed of in accordance with 104.07. Cracks and joints shall be filled with hot poured joint sealant to within 1/4 in. (6 mm) of the surface in accordance with the manufacturer's recommendations.

408.06 Sealing Cracks and Joints

Cracks and joints shall be cleaned by blowing with compressed air or by other suitable means. Asphalt material shall be placed utilizing a "V" shaped wand tip, to allow

FINAL DRAFT MINUTES

the penetration of the materials into the cracks and joints. The cracks and joints shall be completely filled or overbanded not to exceed 5 in. (125 mm), or as required. All excess asphalt material shall be removed from the pavement. The sealed cracks and joints shall be covered with sufficient fine aggregate to prevent tracking of the asphalt materials. All excess cover material shall be removed from the pavement.

Application of asphalt materials shall be completed without covering existing pavement markings. When traffic is to be maintained within the limits of the section, temporary traffic control measures in accordance with 801 shall be used. Treated areas shall not be opened to traffic until the asphalt material has been absorbed.

408.07 Method of Measurement

Sealing and filling of cracks and joints in asphalt pavements will be measured by the ton (megagram) of material used. Routing of cracks and joints will not be measured.

Temporary traffic control measures will be measured in accordance with 801.17.

408.08 Basis of Payment

Sealing and filling of cracks and joints in asphalt pavements will be paid for by the ton (megagram) of material used for the type specified.

Temporary traffic control measures will be paid for in accordance with 801.18.

Payment will be made under:

Pay Item	**Pay Unit Symbol**
Cracks and Joints in Asphalt Pavement, Seal	TON (Mg)
Cracks and Joints in Asphalt Pavement, Rout and Seal	TON (Mg)

The cost of all materials, cover aggregate, cleaning, and all necessary incidentals shall be included in the cost of the pay items in this section.

FINAL DRAFT MINUTES

COMMENTS AND ACTION

SECTION 408 – SEALING CRACKS AND JOINTS

DISCUSSIONS: Mr. Shields, sitting in for Mr. Andrewski, introduced this item and explained it as described in the proposal sheet. Mr. Shields further explained that the fibers are required for micro-surfacing applications only.

Clarification was provided by Mr. Shields that no changes are needed for any existing pay items. Mr. Prather further stated that the fibers are blended in with the crack seal material prior to placement.

Mr. Keefer inquired as to why this material can't be included in the micro-surfacing spec. The explanation given by Mr. Shields and Mr. Prather is that not all micro-surfacing contracts contain crack sealing.

Mr. Prather also clarified that the majority of the micro-surfacing contractors prefer the use of the fibers during crack sealing to make it more compatible with the micro-surfacing material, and may assist in keeping the micro-surfacing material from delaminating at crack sealed areas.

It was suggested using the term "warranted micro-surfacing" instead of "Microsurface treatment" as shown in these minutes.

Motion: Mr. Shields Second: Mr. Boruff Ayes: 9 Nays: 0	Action: _X_ Passed as Submitted (w/editorial change) ____ Passed as Revised ____ Withdrawn
Standard Specifications Sections references: SECTION 408 begins pg 275. Recurring Special Provision affected: NONE Standard Sheets affected: NONE Design Manual Sections affected: NONE GIFE Sections cross-references: NONE	_X_ 2014 Standard Specifications Book ____ Revise Pay Items List _X_ Create RSP (No. 408-R-593 Effective April 01, 2012 Letting RSP Sunset Date: 2014 Book ____ Revise RSP (No.____) Effective ____Letting RSP Sunset Date: ____ Standard Drawing Effective ____ ____ Create RPD (No. ____) Effective ____Letting ____ Technical Advisory GIFE Update Req'd.? Y ___ N ___ By ____ Addition or ____ Revision Frequency Manual Update Req'd? Y__N__ By ____ Addition or ____ Revision Received FHWA Approval? Yes

FINAL DRAFT MINUTES

Mr. Andrewski
Date: 11/16/11

SPECIFICATIONS, SPECIAL PROVISIONS AND DRAWINGS

REVISION TO SPECIAL PROVISIONS

PROPOSAL TO STANDARDS COMMITTEE

PROBLEM(S) ENCOUNTERED: Revised/Updated specification. Current specification was last revised May 2009 and revisions and updates were needed. Since 2007 INDOT has completed or scheduled to let 53 microsurface projects. Due to the amount of use we are requesting to move this from a recurring special provision to a standard specification.

PROPOSED SOLUTION: Revised specification will provide a better end product by specifying type of equipment requirements, updating preparation and finished pavement language, added pay items for approaches, minor adjustments to warranty section and minor update to pavement distress threshold. Move to standard specification status due to historical and future use demands.

APPLICABLE STANDARD SPECIFICATIONS:

APPLICABLE STANDARD DRAWINGS: N/A

APPLICABLE DESIGN MANUAL SECTION: 52-11.0

APPLICABLE SECTION OF GIFE: Unknown

APPLICABLE RECURRING SPECIAL PROVISIONS: 411-R-432

PAY ITEMS AFFECTED:

Submitted By: Dave Andrewski

Title: Manager, Office of Pavement Engineering

Organization: INDOT

Phone Number: 317-232-5452

Date: May 10, 2011

APPLICABLE SUB-COMMITTEE ENDORSEMENT: This revision was completed by the Pavement Preservation Subcommittee (Todd Shields, Bill Tompkins, Jeremy VanVleet, Scott Trammell, Doug Moser, Dave Dallas, Dave Andrewski, Jeff James, Mike Prather, Tom Duncan, Tommy Nantung, Kerry Land, Ju Sang Lee, Khalil Dughaish,Matt Beeson). The spec was also sent to our qualified contractors for comments and suggestions.

FINAL DRAFT MINUTES

REVISION TO SPECIAL PROVISIONS

PROPOSED REVISED 411-R-432 WARRANTED MICRO-SURFACING

(Proposed changes shown as highlighted in gray)

411-R-432 WARRANTED MICRO-SURFACING

(Revised XX-XX-11)

The Standard Specifications are revised as follows:

SECTION 411, BEGIN LINE 1, INSERT AS FOLLOWS:

SECTION 411 – WARRANTED MICRO-SURFACING

411.01 Description

This work shall consist of furnishing materials and the ~~construction~~placement of warranted micro-surfacing in accordance with 105.03. Multiple course micro-surfacing shall consist of a surface course over a rut fill or leveling course. Single course micro-surfacing shall consist of a surface course.

The Contractor shall be responsible for the warranted micro-surfacing for a period of 3 years after the date ~~all~~ warranted micro-surfacing is completed and open to unrestricted traffic.

MATERIALS

411.02 Materials

Materials shall be in accordance with the following:

*Asphalt Emulsion .....As Defined**
*Coarse Aggregates – Class B or Higher **.....904*
*Fine Aggregates*** 904*
Portland Cement, Type I .....901.01(b)
Water 913.01

* *Polymer Modified Asphalt Emulsion shall be a quick-set, CSS-1h emulsion in accordance with AASHTO M 208 except the cement-mixing test is waived. The polymer material shall be milled or blended into the asphalt or blended into the emulsifier solution prior to the emulsification process. The minimum polymer solids content will be 3.0% based on the residual of the emulsion. Mix set additives shall be added as required to provide control of the quick-set properties. Additional requirements shall be in accordance with the following:*

Characteristics	*AASHTO Test Method*	*Requirement*
Residue by Distillation, % (Note 1)	*~~AASHTO~~ T 59*	*62+*
Softening Point, °F (°C)	*~~AASHTO~~ T 53*	*140+ (60+)*
Viscosity @140°F (60°C)	*~~AASHTO~~ T 202*	*8000+*
Elastic Recovery @ 77°F (25°C), %	*~~AASHTO~~ T 301*	*60*
NOTE 1. The temperature for this test shall be held below 180°F (82°C). The sample is oven evaporated on a glass plate at 77°F (25°C) for 24 h (forced draft oven). Material is then scraped from the plate with a razor blade tool.		

FINAL DRAFT MINUTES

REVISION TO SPECIAL PROVISIONS

PROPOSED REVISED 411-R-432 WARRANTED MICRO-SURFACING

** *The coarse aggregate angularity shall be a minimum of 95% in accordance with ASTM D 5821. The coarse aggregate for rut fill shall be limestone, dolomite, crushed gravel, sandstone, ACBF, or SF. The surface application aggregate type shall be based on the ESAL category in the Surface Aggregate Table below.*

*** *The fine aggregate for micro-surface shall be limestone, dolomite, crushed gravel, sandstone, ACBF, or SF. The fine aggregate angularity shall be a minimum of 45 in accordance with AASHTO T 304 Method A. The clay content of the blended aggregate material from the fine and coarse aggregates shall meet a minimum sand equivalency of 65 in accordance with AASHTO T 176. The surface leveling application aggregate type shall be based on the ESAL category as follows:*

Surface Aggregate Table			
Coarse or Fine Aggregate Type	*Traffic ESALs*		
	< 3,000,000	*< 10,000,000*	*≥ 10,000,000*
Air-Cooled Blast Furnace Slag	*Yes*	*Yes*	*Yes*
Steel Furnace Slag	*Yes*	*Yes*	*Yes*
Sandstone	*Yes*	*Yes*	*Yes*
Crushed Dolomite	*Yes*	*Yes*	*Note 1*
Polish Resistant Aggregates	*Yes*	*Yes*	*Note 1*
Crushed Stone	*No*	*No*	*No*
Gravel	*No*	*No*	*No*
NOTE 1. Polish resistant aggregate or crushed dolomite may be used when blended with ACBF or sandstone but cannot exceed 50% of the coarse aggregate by weight (mass), or cannot exceed 40% of the coarse aggregate by weight (mass) when blended with SF.			

411.03 Design Mix Formula

The Contractor shall submit a Design Mix Formula, DMF, for the specific materials to be used on the project to the District Testing Engineer 1 week prior to use. The DMF shall state the following, where ~~(all~~ the percentages shown are based on the dry weight of the aggregate~~)~~:

(a) source of each individual material
(b) ~~T~~the aggregation gradation shall be in accordance with the following:

Sieve Size	*Surface/Leveling, %*	*Rut Fill, %**
3/8 in. (9.5 mm)	*100*	*100*
No. 4 (4.75 mm)	*85-100*	*70-90*
No. 8 (2.36 mm)	*50-80*	*45-70*
No. 16 (1.18 mm)	*40-65*	*28-50*
No. 30 (600 µm)	*25-45*	*19-34*
No. 50 (300 µm)	*13-25*	*12-25*
No. 100 (150 µm)	*7-18*	*7-18*
No. 200 (75 µm)	*5-15*	*5-15*
* *If rut fill course is used as a surface application, the aggregates shall be in accordance with the Surface Aggregate Table above.*		

FINAL DRAFT MINUTES

(c) percentage of aggregate
(d) percentage of mineral filler (minimum and maximum)
(e) percentage of water (minimum and maximum)
(f) percentage of mix set additives (if required)
(g) percentage of polymer modified CSS-1h emulsified asphalt
(h) state the quantitative effects of moisture content on the unit weight of the aggregate
(i) results for the tests in the following:

Characteristic	*Test Method ISSA**	*Requirement*
Wet Cohesion *30 Minutes, Min. (Set Time)* *60 Minutes, Min. (Traffic)*	*TB-139***	 *12 kg-cm* *20 kg-cm*
Wet Stripping, Min.	*TB-114*	*90%*
Wet Track Abrasion Loss *60 Minutes Soak, Max.*	*TB-100*	 *536 g/m^2*
Saturated Abrasion *Compatibility, Max*	*TB-144*	 *3g loss*
Mix Time @ 77°F (25°C)	*TB-113***	*controllable to 120 s*
Mix Time @ 104°F (40°C)	*TB-113***	*controllable to 35 s*

* *International Slurry Surfacing Association*
** *The TB-139 (set time) and TB-113 (mix time) tests shall be checked at the highest temperature expected during construction. For the TB-113 test at 104°F (40°C), all ingredients and containers shall be preheated.*

411.04 Equipment

The Contractor shall use self-contained, self-propelled, continuous loading units designed for micro-surfacing.

Truck-mounted batch type machines will be allowed on projects with quantities smaller than or equal to 50,000 sq yds. The Contractor shall provide a minimum of 2 truck-mounted units at all times.

411.045 Pre-Paving Coordination

A pre-paving meeting between the Contractor and the Engineer will be held on-site prior to beginning work. The agenda for this meeting will include as a minimum:

(a) the Contractor's detailed work schedule
(b) traffic control plan
(c) calibration of equipment
(d) Design Mix Formula/Job Mix Formula
(e) inspection and evaluation of the condition and adequacy of equipment, including units for transport of materials
(f) Quality Control Plan in accordance with ITM 803

FINAL DRAFT MINUTES

REVISION TO SPECIAL PROVISIONS

PROPOSED REVISED 411-R-432 WARRANTED MICRO-SURFACING

411.0~~5~~6 Preparation of Surfaces

The Contractor shall be responsible for all surface preparation necessary ~~that may affect the performance of~~ to meet the performance requirements for ~~the~~ warranted micro-surfacing~~, including, but not limited to compatibility of crack sealing materials when the contract includes crack sealing prior to micro-surfacing~~. All castings and detector housings shall be protected ~~during~~prior to the application of material in accordance with 404.07.

411.0~~6~~7 Opening to Traffic

The micro-surface shall be capable of being opened to traffic within 1 h after application. If the micro-surface is not stable under traffic loading within 1 h of placement, the Contractor shall immediately cease operations. Prior to resuming operations, the Contractor shall notify the Engineer of the cause and the corrective action to be taken.

411.0~~7~~8 Finished Pavement Properties

~~Pavement smoothness shall be in accordance with 401.18 except profilograph requirements will not apply. Smoothness requirements shall not apply to shoulder micro-surface placed separately~~All finished surface irregularities in excess of 1/8 in. ~~(3 mm)~~ measured with a 10 ft straightedge shall be corrected.

The longitudinal construction joints and lane edges shall coincide with the proposed painted lane lines. Longitudinal joints shall be constructed with less than a 3 in. ~~(75 mm)~~ overlap on adjacent passes and no more than 1/4 in. ~~(6 mm)~~ overlap thickness measured with a 10 ft ~~(3 m)~~ straightedge in accordance with 409.03(f). If applicable, overlapping passes shall be made ~~on the uphill side~~ to prevent ponding of water. Construct ~~neat and uniform~~ transverse joints with no more than a 1/8 in. ~~(3 mm)~~ difference in elevation across the joint as measured with a 10 ft ~~(3 m)~~ straightedge. The lane edge shall be ~~neat and uniform with~~have no more than 2 in. ~~(50 mm)~~ of horizontal variance in ~~any~~ 100 ft ~~(30 m)~~.

411.0~~8~~9 Warranty

A warranty bond is to insure completion of required warranty work, including payments for all labor, materials, equipment, and incidentals necessary or convenient to the successful completion of the project and the carrying out of the duties and obligations imposed by the contract used to remediate any warranted distresses.

The Contractor shall provide a warranty bond equal to 100% of the contract total for the warranted micro-surfacing pay items. The warranty bond shall be in effect for 3 years from the date of substantial completion. ~~Upon completion of all warranted micro-surfacing and opening to unrestricted traffic, the warranty bond shall be in effect for a total of 3 years.~~ The warranty bond shall be properly executed by a surety ~~company~~ satisfactory to the Department and be payable to the State of Indiana and submitted with the Contractor's bid.

FINAL MEETING MINUTES

REVISION TO SPECIAL PROVISIONS

PROPOSED REVISED 411-R-432 WARRANTED MICRO-SURFACING

~~The warranty bond shall be an amount equal to 100% of the contract total for the warranted micro-surfacing excluding patching or other work included in the contract microsurfacing pay items. The bond is intended to insure completion of required warranty work, including payments for all labor, equipment, materials and closure periods used to remediate any warranted distresses.~~

Upon the final acceptance of the project, the contractual obligations of the Contractor are satisfied as long as the micro-surfacing continues to meet or exceed the warranted values as defined herein.

All warranty work shall be accomplished in accordance with 411.~~10~~11. At the end of the warranty period, the Contractor will be released from further warranty work or responsibility, provided all previous warranty work has been satisfactorily completed and approved by the Department.

411.~~09~~10 Conflict Resolution Team

The scope of work for the conflict resolution team includes all issues concerning the warranted pavement relative to the quality control plan, material selection, warranted pavement evaluations, distress indicators, remedial action, and remediation plans.

The team will consist of 2 Contractor representatives, 2 Department representatives, and an additional ~~5th~~ person mutually agreed upon by both the Department and the Contractor. All costs for the ~~5th~~additional person will be equally shared ~~between~~by the Department and the Contractor.

The team members will be identified in writing when needed and will be knowledgeable in the terms and conditions of this warranty and the methods used in the measurement and calculation of pavement distress. The team will render a final recommendation to the Chief Engineer by a majority vote. Each member has an equal vote.

411.~~10~~11 Warranty Work

Elective work is performed by the Contractor at its discretion to meet the performance requirements of warranted micro-surfacing prior to direction from the Department for the Contractor to perform remedial work.

Remedial work is performed as a result of pavement distress surveys performed by the Department.

During the warranty period, elective~~/preventive~~ work and remedial work shall be performed at no cost to the Department ~~and shall be based on the results of pavement distress surveys. Remedial work to be performed and materials to be used shall be a decision of the Contractor with approval of the Department~~~~Elective/preventive work is~~

FINAL DRAFT MINUTES

~~performed as a result of monitoring of the warranted micro-surfacing by the Contractor~~. Elective~~/preventive~~ work shall be at the Contractor's option. ~~Remedial work is performed as a result of pavement distress surveys performed by the Department.~~ The scope of all elective~~/preventive~~ work or remedial work to be performed as well as materials to be used shall be proposed by the Contractor and ~~approved~~shall be subject to approval by the Department. Prior to proceeding with any warranty work or monitoring, all necessary permits shall be obtained from the Department.

~~Remedial/Warranty~~Elective work ~~initiated by the Contractor~~ during the warranty period will not be assessed a lane closure fee. For ~~Department initiated warranty~~remedial work, costs for closure periods will be applied using the following closure period rates:

~~Peak Hour~~From ___ to ___ : $xxxxxx/lane/hour
~~Non – Peak Hour~~From __ to __ : $xxxxxx/lane/hour

During the warranty period, the Contractor may monitor the warranted micro-surfacing using non-destructive procedures. ~~All proposed remedial actions shall be coordinated with the Department~~.

Coring, milling or other destructive procedures may not be performed by the Contractor, without prior consent of the Department. The Contractor will not be responsible for damages to the pavement as a result of coring, milling or other destructive procedures conducted by the Department.

The Contractor ~~will have~~has the ~~1st~~first option to perform the remedial work. If, ~~in the opinion of the Engineer,~~ the problem requires immediate attention, as determined by the Engineer, for safety of the traveling public and the Contractor cannot perform the remedial work within 24 h of notification, the Department ~~has the option to have emergency~~will perform the remedial work ~~performed by other forces~~. The Contractor shall be responsible ~~to pay~~ for all costs incurred by the Department for ~~emergency~~ remedial work performed by the Department. Remedial work performed by ~~other forces~~the Department will not alter the requirements, responsibilities, or obligations of the warranty.

411.~~11~~12 Pavement Distress Indicators, Thresholds, and Remedial ~~Action~~Work

The Department will use the following pavement distress indicators throughout the warranty period:

(a) Rutting – transverse displacement of the micro-surfacing
(b) Delamination – physical separation of the micro-surfacing that exposes the underlying surface ~~within a wheelpath~~
(c) Raveling – wearing away of the micro-surfacing
(d) Skid Resistance – friction number as measured by ASTM E 274 and E 524

FINAL DRAFT MN DOT

REVISION TO SPECIAL PROVISIONS

PROPOSED REVISED 411-R-432 WARRANTED MICRO-SURFACING

The pavement threshold values for the pavement distress indicators will be evaluated for the entire length of the ~~contract~~project for each lane. The threshold values for the pavement distress indicators are listed below:

	~~Single Location~~	~~Multiple Location/mile~~
~~Delamination~~	~~0.5 yd²~~	~~1.0 yd²~~
~~Raveling~~	~~0.5 yd²~~	~~1.0 yd²~~

~~Rut Depth .....average 1/4 in. (6 mm)~~
~~Friction Number*.....average 35, no value less than 30~~
~~* Individual friction tests will be done in each lane every 1/2 mi for the length of the contract.~~

Distress	Single Location	Multiple Locations
Delamination~~/~~or Raveling	1/2 sq yd	1 sq yd/mi
Rut Depth	1/4 in.	average 1/4 in./mi
Friction Number*	no less than 30	average 35

* Individual friction tests will be performed in each lane every 1/2 mi for the length of the ~~contract~~project.

The Department may evaluate the warranted micro-surfacing during the warranty period. A final condition survey will be made by the Department and the Contractor will be notified in writing of all sections exceeding the warranty threshold at least 90 days in advance of the expiration of the warranty period.

If the Department determines that any ~~of the~~ threshold level~~s are~~has been met or exceeded and remedial work is required, the Contractor shall ~~recommend~~~~propose~~submit a ~~remedial action and~~ work plan and schedule to the ~~Department~~Engineer for approval. ~~After the proposed remedial action and work schedule is approved, t~~The Contractor shall perform the remedial work within 30 calendar days of notification of approval by the Engineer.

~~*Remedial action shall be taken within 30 calendar days of the date the Contractor is notified that a threshold level has been met or exceeded by the final condition survey. If threshold levels are met or exceeded within the warranty period, the Contractor shall submit for approval his recommended remedial action and work schedule*~~.

If, anytime during the warranty period, 30% or more of the project requires, or has received remedial ~~action~~work, remedial work as determined by the Department shall be performed on the entire project ~~shall receive a remedial action as determined by the Contractor and the Department. If an impasse develops, the team will make a final recommendation~~.

If remedial or elective ~~action~~ work ~~or elective/preventive action work~~ performed by the Contractor necessitates ~~a~~repair or replacement of ~~corrective action to the~~

pavement markings, adjacent lanes or roadway shoulders, ~~such corrective action to the pavement markings, adjacent lanes, and shoulders~~the required ~~corrective action~~work shall be the responsibility of the Contractor.

Warranty requirements for ~~all~~elective and remedial~~tion~~ work will be limited to the life of the original contract warranty.

~~*If any of the threshold levels are met or exceeded and the Contractor does not agree to the pavement distress survey or the Department does not agree with the proposed remedial action, the team will provide a recommendation within 30 calendar days.*~~

~~*The Contractor will not be held responsible for distresses that are caused by factors beyond the control of the Contractor. The Contractor shall be responsible for materials and workmanship problems*~~.

~~***411.12 Elective/Preventive Action***~~
~~*Elective or preventive action may be performed by the Contractor with concurrence from the Department*~~.

411.13 Department Maintenance
The Department ~~will~~may perform routine maintenance operations during the warranty period ~~such as~~including, but not limited to, plowing, applying de-icing chemicals, repairs to safety appurtenances, pavement markings, mowing and sign maintenance. The Department, during the warranty period, will perform no routine pavement surface maintenance activities.

411.14 Method of Measurement
Warranted ~~M~~micro-~~S~~surfacing~~, Warranted~~, of the type specified, will be measured by the square yard ~~(square meter)~~ of ~~the~~ surface course. ~~The width of the surface course will be the width placed. The length of the surface course will be measured along the centerline of each roadway or ramp.~~

Only the ~~micro-surface~~ surface course will be measured for payment.

411.15 Basis of Payment
Warranted micro-surfacing, of the type specified, ~~The accepted quantities for this work~~ will be paid for at the contract unit price per square yard ~~(square meter~~) of micro-surface, warranted, of the type specified, complete in place.

~~*The accepted quantities for micro-surfacing approaches will be paid for at the contract unit price per square yard (square meter) of micro-surface, warranted, for approaches of the type specified, complete in place.*~~

Payment will be made under:

REVISION TO SPECIAL PROVISIONS

PROPOSED REVISED 411-R-432 WARRANTED MICRO-SURFACING

Pay Item ***Pay Unit Symbol***

Micro-Surfacing, Warranted, for Approaches, Multiple Course.....SYS ~~(m2)~~
Micro-Surfacing, Warranted, for Approaches, Single Course .....SYS ~~(m2)~~
Micro-Surfacing, Warranted, Multiple Course.....SYS ~~(m2)~~
Micro-Surfacing, Warranted, Single Course .....SYS ~~(m2)~~

The cost of all incidentals including, but not limited to, ~~furnishing materials, equipment, labor, maintenance of traffic, underlying micro-surface courses, and tack coat for micro-surface, if required,~~ surface preparation, meeting smoothness requirements, and warranty bond ~~all incidentals~~ shall be included in the cost of ~~micro-surfacing, warranted, of~~ the pay items ~~type specified~~.

411.16 Final Warranty Acceptance

The Engineer will review the project in the field for any ~~obvious~~ ~~general~~ defects not addressed in the indicators and recommend a Final Warranty Acceptance. The ~~Division of Construction Management~~Department will issue the Contractor a Final Warranty Acceptance letter upon completion of the warranty period and all ~~required~~ remedial work.

FINAL DRAFT MINUTES

REVISION TO SPECIAL PROVISIONS

BACKUP 01 DESIGN MEMORANDUM TECHNICAL ADVISORY (DRAFT)

INDIANA DEPARTMENT OF TRANSPORTATION

Driving Indiana's Economic Growth

Design Memorandum No. __
Technical Advisory

May 10, 2011 DRAFT

TO: **All Design, Operations, and District Personnel, and Consultants**

FROM: **Todd Shields**
Manager, Office of Technical Services
Highway Operations Division

SUBJECT: **Microsurface**

REVISES: ***Indiana Design Manual*** **Section 52-11.01**
4. Micro-surfacing

EFFECTIVE: **, 2011, Letting**

Micro-surfacing design guidelines have been revised and is attached.

4. Micro-surfacing. Micro-surfacing is a thin, polymer-modified asphalt emulsion mixture. Micro-surfacing may be used to provide a new wearing course to arrest the oxidation of asphalt pavement, improve friction, or fill ruts. An existing pavement should have no large cracks or excessive surface irregularities such as shoving. Cores should be taken to determine the thickness and investigate if a stripping condition exists. Core data and life-cycle cost data should be reviewed with the Office of Pavement Engineering for specific recommendations.

   All pavement markings and raised pavement markers must be removed prior to placement of a micro-surface. This should be included in the appropriate pavement-marking-removal pay items. Since micro-surfacing is an emulsion based material, it requires time to fully cure. Thermoplastic and preformed tape may not adhere well, so permanent marking materials should be paint or multi-component.

FINAL DRAFT MINUTES

~~Temporary removable markings may not adhere well to a microsurface. Therefore, temporary paint should be included as a pay item.~~

If a pavement cross section has irregularities that will require a leveling course, or ruts greater than 0.25 in. that will require a rut fill course, a multiple course micro-surface should be specified. Otherwise, a single course micro-surface may be specified.

The designer should identify any existing surface irregularities, including bumps, in the plans that need to be addressed and should be included in the cost of other items.

If public road or other approaches require micro-surfacing, those areas should be included as separate pay items (i.e. Micro-surfacing for Approaches).

Since the type of aggregate used in micro-surfacing is dependent on ESAL's, mainline ESAL's need to be shown on the traffic data block on the title page of the plans.

Tack should not be included as a separate pay item for micro-surface. Contractors may elect to use tack to meet the warranty requirements, but it is at their expense. Tack should be included for other HMA work only, such as patching.

The Warranted ~~UBWC~~micro-surfacing spec requires a Lane rental cost be included. Section 81-3 of the Indiana Design Manual provides guidance on obtaining lane rental costs. Figure 81-3D Part B includes the calculations which can be used to determine the ~~peak hour and off-peak~~ hourly lane rental rates.

a. AADT. Micro-surface may be used without regard to traffic volume.

b. Pavement Distresses. A micro-surface may be used on a road with low severity surface cracks. Cracks will typically reflect through the micro-surface in a short time period. Cracks should be sealed prior to the application of a micro-surface. Cracks wider than ¼ in. may need to be routed prior to sealing.

c. Rutting. Micro-surface may be used to correct rutting.

d. Roughness. The IRI should be 130 or less. The pavement should not have severe distresses indicative of a pavement nearing the end of its life. Micro-surfacing will not significantly improve surface roughness.

e. Friction. A pavement with a low FN should be considered for a micro-surface treatment. A micro-surface will restore surface friction.

FINAL DRAFT MINUTES

f. Surface Aging. A micro-surface may be used to stop future deterioration of an asphalt pavement due to age hardening, oxidation, or minor raveling.

Each micro-surfacing project should be reviewed and approved by the Pavement Steering Committee. A life-cycle cost analysis in accordance with Section 52-12.0 should be completed.

FINAL DRAFT MINUTES

COMMENTS AND ACTION

411-R-432 WARRANTED MICRO-SURFACING

DISCUSSIONS: This item was presented by Mr. Shields who recommended that this item be included in the 2014 spec book.

There was discussion concerning the equipment requirements described in section 411.04, which resulted in clarification of the equipment criteria in that section.

Mr. Pankow suggested that the Warranty Bond language also be revised for clarification. Mr. Strain inquired as to the lane fees and how they are determined. Mr. Heustis recommend that there be a lane work closure fee described on the proposal page, since we cannot have a “fill in the blank” portion in the spec book. Mr. Caplinger also said he would like to see it on the proposal page.

Mr. Pankow suggested this RSP be reworked and brought back later. Mr. Miller said we could leave this as proposed for now, but it would need to be reworked prior to incorporation into the 2014 spec book.

Mr. Strain inquired as to the emergency repairs. Mr. Shields explained that we haven’t experienced this yet in Indiana, but the language is in the RSP so it can be dealt with.

As for the lane closure, Mr. Shields suggested leaving it as it is since the same language is in the UBWC RSP and in the HMA warranty spec.

Mr. Miller inquired as to the Design Memo, since it also mentions UBWC. Mr. Shields will look into this and make any necessary corrections. Mr. Miller also inquired as to having alternate bid options, as with the 4.75 treatment. There was also a brief explanation by Mr. Prather on macro-surfacing and friction requirements and how it relates to the 4.75mm surface treatments.

Mr. Caplinger inquired about the MOT during warranty work. Mr. Shields explained that the MOT is during original placement; under warranty work all costs are by the Contractor. Further discussion ensued on warranty work and lane closure fees.

Mr. Uremovich mentioned that this spec contains no metric equivalents. Mr. Miller responded that we can leave it alone for now, and that the intention is to remove metric references in the next spec book. The intention is now to remove the metric equivalents shown in ( ).

Mr. Uremovich also inquired about elective/preventive work as described. Mr. Heustis suggested that the paragraph be reworded.
Mr. Uremovich also mentioned an editorial revision to that same paragraph concerning the approval. Mr. Uremovich also mentioned the inconsistency in terminology – micro-surface vs micro-surfacing. It was agreed by the committee that the entire section on Warranty be revised and reworded.
Additionally, the 3 ft straightedge should be 10 ft.

The motion was made to revise the motion pending editorial revisions as discussed.

More revisions will be necessary prior to incorporating in the 2014 book.

FINAL DRAFT MINUTES

COMMENTS AND ACTION

411-R-432 WARRANTED MICRO-SURFACING

(CONTINUED)

Motion: Mr. Shields Second: Mr. Anderson Ayes: 9 Nays: 0	Action: ____ Passed as Submitted __X__ Passed as Revised ____ Withdrawn
Standard Specifications Sections affected: NONE Recurring Special Provision affected: 411-R-432 WARRANTED MICRO-SURFACING Standard Sheets affected: Section 52-11.01 Design Manual Sections affected: NONE GIFE Sections cross-references: NONE	__X__ 2014 Standard Specifications Book ____ Revise Pay Items List ____ Create RSP (No.____) Effective ____Letting RSP Sunset Date: ____ __X__ Revise RSP (No. 411-R-432) Effective April 01, 2012 Letting RSP Sunset Date: 2014 book Standard Drawing Effective ____ ____ Create RPD (No. ____) Effective ____Letting ____ Technical Advisory GIFE Update Req'd.? Y ___ N ___ By ____ Addition or ____ Revision Frequency Manual Update Req'd? Y___N___ By ____ Addition or ____ Revision Received FHWA Approval? Yes

FINAL DRAFT MINUTES

Mr. Boruff
Date: 11/16/11

SPECIFICATIONS, SPECIAL PROVISIONS AND DRAWINGS

REVISION TO STANDARD DRAWINGS

PROPOSAL TO STANDARDS COMMITTEE

PROBLEM(S) ENCOUNTERED: At some light pole installations the anchor rod washers at the transformer bases are failing due to insufficient thickness and diameter. These dimensions are not currently given in the standards. As a result washers that are sized for other applications are incorrectly being used..

PROPOSED SOLUTION: Manufacturers recommend a 1/2" thick, 1-1/16" inner diameter and 2-3/4" outer diameter washer for transformer base applications. We propose a revision to the standard drawing 807-LTST-02 for "Aluminum Light Pole With Transformer Base" to specify the recommended dimensions.

APPLICABLE STANDARD SPECIFICATIONS: N/A

APPLICABLE STANDARD DRAWINGS: 807-LTST-02

APPLICABLE DESIGN MANUAL SECTION: N/A

APPLICABLE SECTION OF GIFE: N/A

APPLICABLE RECURRING SPECIAL PROVISIONS:

PAY ITEMS AFFECTED: N/A

Submitted By: David Boruff

Title: Supervisor Traffic Administration section

Organization: INDOT

Phone Number: 317-234-7975

Date: 10/12/11

APPLICABLE SUB-COMMITTEE ENDORSEMENT: Ad hoc review by Industry, INDOT Production Division, District Highway Maintenance.

FINAL DRAFT MINUTES

SPECIFICATIONS, SPECIAL PROVISIONS AND DRAWINGS

REVISION TO STANDARD DRAWINGS

THIS PAGE INTENTIONALLY LEFT BLANK

FINAL DRAFT MINUTES

REVISION TO STANDARD DRAWINGS

REVISED 807-LTST-02 ALUMINUM LIGHT POLE WITH TRANSFORMER BASE (DRAFT)

FOR ROADWAY INSTALLATION (TRANSFORMER BASE)

E.M.H. (FT.)	ARM LENGTH (FT.)	SHAFT			BASE PLATE
		BASE DIAMETER (IN.)	TOP DIAMETER (IN.)	THICKNESS (IN.)	BOLT CIRCLE (IN.)
25	5	8	4.5	0.188	11 ½"
25	10	8	6	0.188	11 ½"
25	15	8	6	0.188	11 ½"
25	20	10	6	0.188	14 ½"
25	25	10	6	0.250	14 ½"
30	5	8	4.5	0.188	11 ½"
30	10	8	6	0.188	11 ½"
30	15	8	6	0.188	11 ½"
30	20	10	6	0.188	14 ½"
30	25	10	6	0.250	14 ½"
35	5	8	4.5	0.188	11 ½"
35	10	8	6	0.188	11 ½"
35	15	8	6	0.188	11 ½"
35	20	10	6	0.188	14 ½"
35	25	10	6	0.250	14 ½"
40	5	8	6	0.188	11 ½"
40	10	8	6	0.188	11 ½"
40	15	8	6	0.219	11 ½"
40	20	10	6	0.219	14 ½"
40	25	10	6	0.312	14 ½"
45	5	8	6	0.219	11 ½"
45	10	8	6	0.219	11 ½"
45	15	8	6	0.219	11 ½"
45	20	10	6	0.250	14 ½"
45	25	10	6	0.312	14 ½"

FOR BRIDGE DECK INSTALLATION (ANCHOR BASE)

E.M.H. (FT.)	ARM LENGTH (FT.)	SHAFT			BASE PLATE
		BASE DIAMETER (IN.)	TOP DIAMETER (IN.)	THICKNESS (IN.)	BOLT CIRCLE (IN.)
25	5	8	4.5	0.188	11 ½"
25	5	8	6	0.188	11 ½"
30	5	8	4.5	0.188	11 ½"
30	5	8	6	0.188	11 ½"
35	5	8	4.5	0.188	11 ½"
35	5	8	6	0.188	11 ½"
40	5	8	6	0.188	11 ½"
40	5	8	6	0.219	11 ½"
45	5	8	6	0.219	11 ½"
45	5	8	6	0.250	11 ½"

GENERAL NOTES

1. Each anchor bolt for roadway installation shall have a diameter of 1", a total length of 4'-4" and a hook length of 4". Each washer shall be galvanized flat washer 1 1/16" I.D., 2 3/4" O.D., 1/2" thick.
2. Each anchor bolt for a bridge deck installation shall have a diameter of 1", a total length of 3'-8", and a hook length of 4".

INDIANA DEPARTMENT OF TRANSPORTATION

ALUMINUM LIGHT POLE
WITH TRANSFORMER BASE

SEPTEMBER 2002

STANDARD DRAWING NO. E 807-LTST-02

RICHARD L. VanCLEAVE REGISTERED No. 9750 STATE OF INDIANA PROFESSIONAL ENGINEER

DESIGN STANDARDS ENGINEER

DESIGN STANDARDS ENGINEER DATE

CHIEF HIGHWAY ENGINEER DATE

REVISION TO STANDARD DRAWINGS

BACKUP 01 EXISTING 807-LTST-02 ALUMINUM LIGHT POLE WITH TRANSFORMER BASE

FOR ROADWAY INSTALLATION (TRANSFORMER BASE)

E.M.H. (FT.)	ARM LENGTH (FT.)	SHAFT			BASE PLATE
		BASE DIAMETER (IN.)	TOP DIAMETER (IN.)	THICKNESS (IN.)	BOLT CIRCLE (IN.)
25	5	8	4.5	0.188	11½
25	10	8	6	0.188	11½
25	15	8	6	0.188	11½
25	20	10	6	0.188	14½
25	25	10	6	0.250	14½
30	5	8	4.5	0.188	11½
30	10	8	6	0.188	11½
30	15	8	6	0.188	11½
30	20	10	6	0.188	14½
30	25	10	6	0.250	14½
35	5	8	4.5	0.188	11½
35	10	8	6	0.188	11½
35	15	8	6	0.188	11½
35	20	10	6	0.188	14½
35	25	10	6	0.250	14½
40	5	8	6	0.188	11½
40	10	8	6	0.188	11½
40	15	8	6	0.219	11½
40	20	10	6	0.219	14½
40	25	10	6	0.312	14½
45	5	8	6	0.219	11½
45	10	8	6	0.219	11½
45	15	8	6	0.219	11½
45	20	10	6	0.250	14½
45	25	10	6	0.312	14½

FOR BRIDGE DECK INSTALLATION (ANCHOR BASE)

E.M.H. (FT.)	ARM LENGTH (FT.)	SHAFT			BASE PLATE
		BASE DIAMETER (IN.)	TOP DIAMETER (IN.)	THICKNESS (IN.)	BOLT CIRCLE (IN.)
25	5	8	4.5	0.188	11 1/2
25	5	8	6	0.188	11 1/2
30	5	8	4.5	0.188	11 1/2
30	5	8	6	0.188	11 1/2
35	5	8	4.5	0.188	11 1/2
35	5	8	6	0.188	11 1/2
40	5	8	6	0.188	11 1/2
40	5	8	6	0.219	11 1/2
45	5	8	6	0.219	11 1/2
45	5	8	8	0.250	11 1/2

NOTES:

1. The anchor bolt for roadway installation shall have a diameter of 1", a total length of 52", and a hook length of 4".
2. The anchor bolt for bridge deck installation shall have a diameter of 1", a total length of 44" and a hook length of 4".
3. Arm shall be truss type on bridge deck installation.

INDIANA DEPARTMENT OF TRANSPORTATION

ALUMINUM LIGHT POLE WITH TRANSFORMER BASE

SEPTEMBER 2002

STANDARD DRAWING NO. E 807-LTST-02

RICHARD L. VANCLEAVE REGISTERED NO. 9750 STATE OF INDIANA PROFESSIONAL ENGINEER

DESIGN STANDARDS ENGINEER

/s/ Richard L. VanCleave 9-03-02
DESIGN STANDARDS ENGINEER DATE

/s/ Richard K. Snyder 9-03-02
CHIEF HIGHWAY ENGINEER DATE

REVISION TO STANDARD DRAWINGS

BACKUP 02 IMAGES NO. 01 THROUGH 04 FROM VARIOUS WORKSITES

No. 01

No. 02

No. 03

No.04

FINAL DRAFT MINUTES

COMMENTS AND ACTION

807-LTST-02 ALUMINUM LIGHT POLE WITH TRANSFORMER BASE

DISCUSSIONS: This item was introduced and explained by Mr. Boruff, in that the washers being used are insufficient and not in accordance with what is shown on the standard drawings.

Mr. Uremovich offered some revisions to the notes shown on the drawing. Mr. Boruff is in concurrence with the language as proposed by Mr. Uremovich. Mr. Garg provided an example of the washers currently being utilized which are drastically smaller than what is required for use.

Mr. Boruff will undertake the task of incorporating the proposed note revisions into drawing 807-LTST-02. Revised draft is shown in these minutes.

FINAL DRAFT MINUTES

Motion: Mr. Boruff Second: Mr. Keefer Ayes: 9 Nays: 0	Action: ____ Passed as Submitted __X__ Passed as Revised ____ Withdrawn
Standard Specifications Sections affected: NONE Recurring Special Provision affected: NONE Standard Sheets affected: 807-LTST-02 ALUMINUM LIGHT POLE WITH TRANSFORMER BASE Design Manual Sections affected: NONE GIFE Sections cross-references: NONE	____ 20__ Standard Specifications Book ____ Revise Pay Items List ____ Create RSP (No.____) Effective ____Letting RSP Sunset Date: ____ ____ Revise RSP (No.____) Effective ____Letting RSP Sunset Date: ____ Standard Drawing Effective Sept. 01, 2012 __X__ Create RPD (No.807-T-179d) Effective February 01, 2012Letting ____ Technical Advisory GIFE Update Req'd.? Y ___ N ___ By ____ Addition or ____ Revision Frequency Manual Update Req'd? Y___N___ By ____ Addition or ____ Revision Received FHWA Approval? Yes

Mr. Strain
Date: 11/16/11

SPECIFICATION REVISIONS

REVISION TO STANDARD DRAWINGS

PROPOSAL TO STANDARDS COMMITTEE

PROBLEM(S) ENCOUNTERED: The Department has developed wide flange bulb tee beams for use in bridge construction. The standard bulb tee elastomeric bearings can not be used for these beam types. The designer was designing a unique bearing for each design.

PROPOSED SOLUTION: A Standard is needed for the wide flange bulb tee beams. These elastomeric bearing pads are designed specifically for the wide flange bulb tee beams.

APPLICABLE STANDARD SPECIFICATIONS: 707, 726, 915.04, and 915.05

APPLICABLE STANDARD DRAWINGS: E726-BEBP-03, 04, 05

APPLICABLE DESIGN MANUAL SECTION: Chapter 406

APPLICABLE SECTION OF GIFE: N.A.

APPLICABLE RECURRING SPECIAL PROVISIONS: N.A.

PAY ITEMS AFFECTED: None

Submitted By: Randy Strain

Title: Bridge Standard Engineer

Organization: INDOT

Phone Number: 317-232-3339

Date: 10-18-11

APPLICABLE SUB-COMMITTEE ENDORSEMENT:

FINAL DRAFT MINUTES

THIS PAGE INTENTIONALLY LEFT BLANK

FINAL DRAFT MINUTES

REVISION TO STANDARD DRAWINGS

PROPOSED NEW 726-BEBP-03 BRIDGE ELASTOMERIC BEARING PADS TYPE TH1-TH4 FOR PRESTRESSED WIDE-FLANGE BULB-TEE BEAMS (FINAL DRAFT)

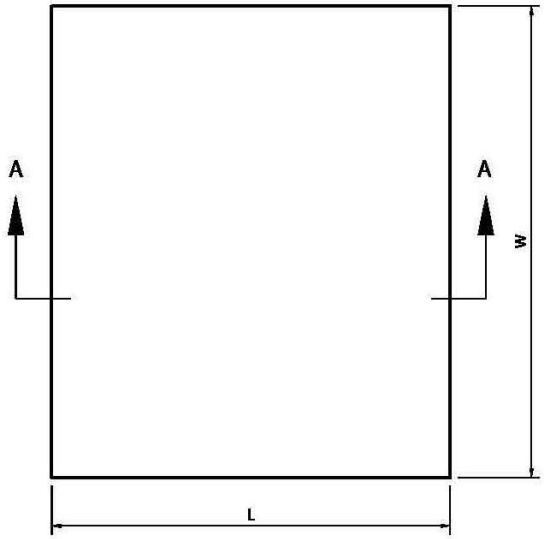

ELASTOMERIC BEARING PAD
PLAN

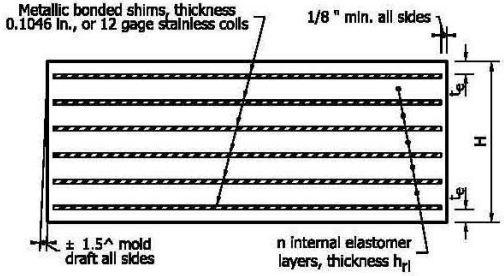

SECTION A - A

NOTES:

1. The rectangular Elastomeric Bearing Pad shall be placed with L dimension parallel to longitudinal bridge axis.
2. h_{rt} is defined as the summation of all internal elastomer thickness plus the two external layers thickness.
3. The Contractor shall check that the bearing seat is level. Grinding may be required to obtain a level seat.
4. The bridge seat shall be finished level at the time concrete is placed. Finished concrete shall be ground if necessary to ensure full and level contact between the seat and the bearing pads when the beams are set.

TABLE OF DIMENSIONS

Bearing Designation	Bearing Width W	Bearing Length L	Internal Elastomer Thickness h_{ri}	Number of Internal Elastomer Layers n	External Elastomer Thickness t_e	h_{rt}	Number of Steel Shims n_s	Bearing Total Thickness H
TH1	36"	12"	1/2"	5	9/32"	3 1/16"	6	3 11/16"
TH2	36"	14"	1/2"	6	9/32"	3 9/16"	7	4 5/16"
TH3	36"	17"	19/32"	7	5/16"	4 25/32"	8	5 5/8"
TH4	36"	19"	19/32"	8	5/16"	5 3/8"	9	6 5/16"

INDIANA DEPARTMENT OF TRANSPORTATION

BRIDGE ELASTOMERIC BEARING PADS
TYPE TH1 - TH4 FOR PRESTRESSED
WIDE-FLANGE BULB-TEE BEAMS

SEPTEMBER 2012

STANDARD DRAWING NO. E 726-BEBP-03

DESIGN STANDARDS ENGINEER DATE

CHIEF HIGHWAY ENGINEER DATE

DESIGN STANDARDS ENGINEER

REVISION TO STANDARD DRAWINGS

REVISION TO 726-BEBP-0~~3~~4 BRIDGE ELASTOMERIC BEARING PADS TYPE S – FOR STEEL BEAMS (FINAL DRAFT)

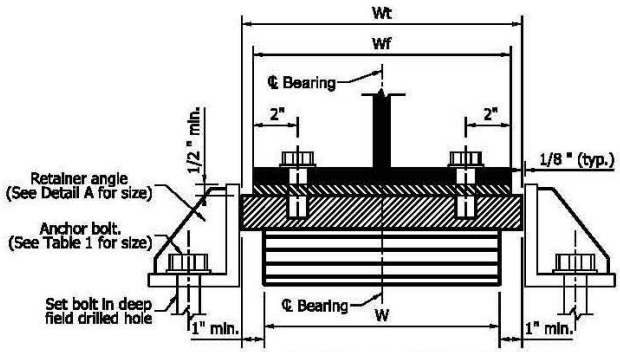

CROSS SECTION THROUGH ASSEMBLY

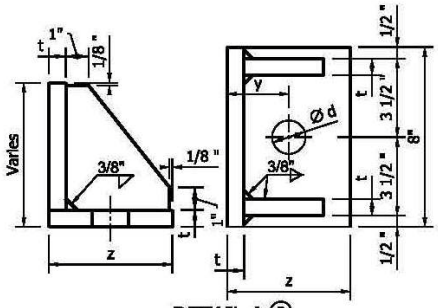

DETAIL A ③

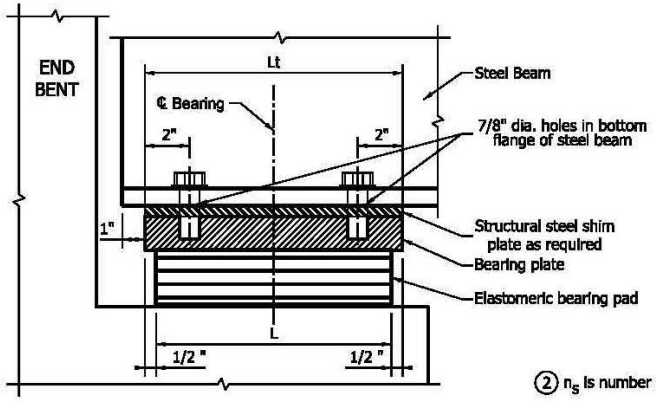

LONGITUDINAL SECTION THROUGH ASSEMBLY

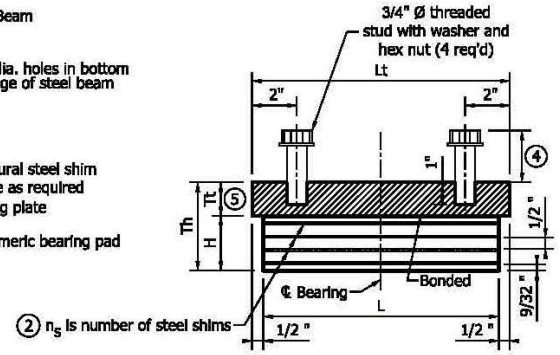

② n_s is number of steel shims

BEARING ASSEMBLY

NOTES:

1. The bearing plate size shall be calculated as follows:
   Lt = L + 1" Wt = Wf + 2" or Wt = W + 2" whichever is greater.

② The shim thickness is 0.1046 in., which corresponds to 12 gage stainless coils.

③ Equivalent rolled angle shape with stiffeners may be used in lieu of welded plates.

④ Minimum dimension required is 1 1/2 " + flange thickness + 1/3" (for shim plate).

⑤ Minimum thickness 1 1/2"

6. See standard drawing E 726-BEBP-05 for Table of Dimensions.

TABLE 1

ANCHOR BOLT SIZE		
BEARING SIZE		BOLT SIZE
S1	11" x 8"	1" x 12"
S2	12" x 9"	1" x 12"
S3	13" x 10"	1" x 12"
S4	15" x 11"	1 1/4" x 15"
S5	16" x 12"	1 1/4" x 15"
S6	20" x 13"	1 1/2" x 18"
S7	20" x 15"	1 1/2" x 18"

TABLE 2

BOLT DIA.	y	z	t	d
1"	2 1/8"	4"	1/2"	1 1/8"
1 1/4"	2 1/4"	4 3/4"	1/2"	1 3/8"
1 1/2"	2 3/4"	5 1/2"	3/4"	1 5/8"

INDIANA DEPARTMENT OF TRANSPORTATION

BRIDGE ELASTOMERIC BEARING PADS
TYPE S - FOR STEEL BEAMS

SEPTEMBER 2012

STANDARD DRAWING NO. E 726-BEBP-04

DESIGN STANDARDS ENGINEER DATE

CHIEF HIGHWAY ENGINEER DATE

DESIGN STANDARDS ENGINEER

REVISION TO STANDARD DRAWINGS

REVISION TO 726-BEBP-045 ELASTOMERIC BEARING PADS TYPE S (FINAL DRAFT)

NOTES

1. h_{rt} is defined as the summation of all internal elastomer thicknesses plus the external elastomer thicknesses.
2. See Standard Drawing E 726-BEBP-04 for Type S bearing assembly details.

TABLE OF DIMENSIONS - TYPE S BEARINGS FOR STEEL BEAMS

Bearing Designation	Bearing Width W	Bearing Length L	Number of Internal Elastomer Layers n	hrt ①	Number of Steel Shims ns	Bearing Total Thickness H
S1-A	11"	8"	2	1 9/16"	3	1 27/32"
S1-B	11"	8"	3	2 1/16"	4	2 7/16"
S2-A	12"	9"	2	1 9/16"	3	1 27/32"
S2-B	12"	9"	3	2 1/16"	4	2 7/16"
S3-A	13"	10"	3	2 1/16"	4	2 7/16"
S3-B	13"	10"	4	2 9/16"	5	3 1/32"
S4-A	15"	11"	4	2 9/16"	5	3 1/32"
S4-B	15"	11"	5	3 1/16"	6	3 5/8"
S5-A	16"	12"	4	2 9/16"	5	3 1/32"
S5-B	16"	12"	5	3 1/16"	6	3 5/8"
S6-A	20"	13"	5	3 1/16"	6	3 5/8"
S6-B	20"	13"	6	3 9/16"	7	4 7/32"
S7-A	20"	15"	6	3 9/16"	7	4 7/32"
S7-B	20"	15"	7	4 1/16"	8	4 13/16"

INDIANA DEPARTMENT OF TRANSPORTATION

ELASTOMERIC BEARING PADS
TYPE S

SEPTEMBER 2012

STANDARD DRAWING NO. E 726-BEBP-05

DESIGN STANDARDS ENGINEER DATE

CHIEF HIGHWAY ENGINEER DATE

DESIGN STANDARDS ENGINEER

REVISION TO STANDARD DRAWINGS

REVISION TO 726-BEBP-04~~5~~ ELASTOMERIC BEARING PADS TYPE S (FINAL DRAFT)

THIS PAGE INTENTIONALLY LEFT BLANK

FINAL DRAFT MINUTES

Mr. Strain
Date: 11/16/11

COMMENTS AND ACTION

726-BEBP-03 BRIDGE ELASTOMERIC BEARING PADS TYPE TH1-TH4 FOR PRESTRESSED WIDE-FLANGE BULB-TEE BEAMS
726-BEBP-0~~3~~*4* BRIDGE ELASTOMERIC BEARING PADS TYPE S – FOR STEEL BEAMS
726-BEBP-04*5* ELASTOMERIC BEARING PADS TYPE S

DISCUSSIONS: This item was introduced and explained by Mr. Strain.

Mr. Miller asked if there would be any changes to the testing requirements, and Mr. Anderson answered that there would be no changes.

There were no further discussions concerning this item.

FINAL DRAFT MINUTES

Motion: Mr. Strain Second: Mr. Keefer Ayes: 8 Nays: 0 Absent: 1	Action: X Passed as Submitted ____ Passed as Revised ____ Withdrawn
Standard Specifications Sections references: 707 pg 538, 539 and 541; 726 pg 670; 915.04 pg 940; 915.05 pg 945. Recurring Special Provision affected: NONE Standard Sheets affected: 726-BEBP-03, 04, 05 Design Manual Sections affected: Section 406 GIFE Sections cross-references: NONE	____ 20__ Standard Specifications Book ____ Revise Pay Items List ____ Create RSP (No.____) Effective ____Letting RSP Sunset Date: ____ ____ Revise RSP (No.____) Effective ____Letting RSP Sunset Date: ____ Standard Drawing Effective Sept. 01, 2012 X Create RPD (No. 726-B-194d) Effective April 01, 2012 Letting X Technical Advisory GIFE Update Req'd.? Y ___ N ___ By ____ Addition or ____ Revision Frequency Manual Update Req'd? Y___N___ By ____ Addition or ____ Revision Received FHWA Approval? Yes

Mr. Andrewski
Date: 11/16/11

SPECIFICATION, SPECIAL PROVISIONS AND DRAWINGS

REVISION TO SPECIAL PROVISIONS

PROPOSAL TO STANDARDS COMMITTEE

PROBLEM(S) ENCOUNTERED: Revised/Updated unique specification. Current specification was last revised in 2008 and revisions and updates were needed. Since 2008 INDOT has completed or scheduled to let 10 UBWC projects. Recent lettings have shown a notable decrease in the cost of this treatment to be more in line with other pavement preservation treatments. Due to this we are anticipating an increase in the use of this treatment option. We would therefore request to move this from a unique special provision to a recurring special provision.

PROPOSED SOLUTION: Revised specification will provide a better end product by modifying/updating asphalt materials section , adding use of recycled materials, revising distress indicators and thresholds, added pay items for approaches and minor adjustments to warranty section . Move to recurring special provision status due to historical and future anticipated use.

APPLICABLE STANDARD SPECIFICATIONS:

APPLICABLE STANDARD DRAWINGS: N/A

APPLICABLE DESIGN MANUAL SECTION: 52-11.0

APPLICABLE SECTION OF GIFE: Unknown

APPLICABLE RECURRING SPECIAL PROVISIONS:

PAY ITEMS AFFECTED:

Submitted By: Dave Andrewski

Title: Supervisor Pavement Engineering

Organization: INDOT

Phone Number: 317-232-5452

Date: May 10, 2011

APPLICABLE SUB-COMMITTEE ENDORSEMENT: This revision was completed by the Pavement Preservation Subcommittee (Todd Shields, Bill Tompkins, Jeremy VanVleet, Scott Trammell, Doug Moser, Dave Dallas, Dave Andrewski, Jeff James, Mike Prather, Tom Duncan, Tommy Nantung, Kerry Land, Ju Sang Lee, Khalil Dughaish,Matt Beeson). The spec was also sent to our qualified contractors for comments and suggestions.

FINAL DRAFT MINUTES

REVISION TO SPECIAL PROVISIONS

PROPOSED NEW 414-X-XXX ULTRATHIN BONDED WEARING COURSE, WARRANTED

414-R-XXX ULTRATHIN BONDED WEARING COURSE, WARRANTED

(Adopted XX-XX-11)

The Standard Specifications are revised as follows:

SECTION 414, BEGIN LINE 1, INSERT AS FOLLOWS:

SECTION 414 - ULTRATHIN BONDED WEARING COURSE, WARRANTED

414.01 Description

This work shall consist of furnishing materials and the placement of warranted Ultrathin Bonded Wearing Course, UBWC, in accordance with 105.03. The UBWC shall consist of surface preparation, application of asphalt emulsion and asphalt mixture. Asphalt mixture shall be produced by a Certified Hot Mix Asphalt Producer.

The Contractor shall be responsible for the warranted UBWC for a period of 3 years after the date ~~all~~ warranted UBWC is completed and open to unrestricted traffic.

MATERIALS

414.02 Materials

Materials shall be in accordance with the following:

Asphalt Emulsion ..... 414.02(a)
Asphalt Materials
PG Binder, PG 64-22, PG 70-22 ..... 902.01(a) and 414.02(b)
PG Binder Grade ..... 414.02(b)
Coarse Aggregates, Class A or Higher ..... 904.03 and 414.02(c)
Fine Aggregates 904.02
Mineral Filler ..... 904.02(f)

(a) Asphalt Emulsion

The requirements for asphalt emulsion shall be in accordance with the following:

Characteristic		*AASHTO Test Method*	*Min.*	*Max.*
Tests on Emulsion				
Viscosity, Saybolt Furol @ 77°F (25 °C), s		*T 59*	*20*	*100*
Storage Stability Test, 24 h, % (Note 1)		*T 59*		*1*
Sieve Test, %		*T 59*		*0.05*
Residue by Distillation, % (Note 2)		*T 59*	*63*	
Oil Distillate by Distillation, %		*T 59*		*2*
Demulsibility, %	*w/35 mL, 0.02 N $CaCl_2$ or*	*T 59*	*60*	
	w/35 mL 0.8% DSS	*T 59*		
Tests on Residue From Distillation				

FINAL DRAFT MINUTES

Penetration (0.1 mm) at 25°C, 100g, 5 s	*T 49*	*90*	*150*
Elastic Recovery @ 39°F (4°C), %	*T 301*	*58*	
Notes: 1. After 24 h, the emulsion shall be a homogeneous color 2. Except maximum temperature of 400 ± 10°F (200 ± 5°C) 3. Organic solvent shall be from the list of Approved Solvents			

(b) Asphalt Materials

The PG binder grade shall be selected based on the following requirements:

PG Binder	*ESAL*
64-22	*< 10,000,000*
70-22	*≥ 10,000,000*

Additional requirements for the PG 70-22 binder as follows:

Characteristic	*AASHTO Test Method*	*Min.*	*Max.*
Separation, % prepared by ASTM D 7173	*T 53*		*6°C*
Elastic Recovery, @ 39°F (4°C), %	*T 301*	*60*	

(c) Coarse Aggregates

Additional requirements for coarse aggregate shall also be as follows:

Characteristic	*Method*	*Min.*	*Max.*
Coarse Aggregate Angularity	*ASTM D 5821*	*95/85**	
Micro-Deval Abrasion, % loss	*AASHTO T 327*		*18*

** Denotes 2 faced crush requirements.*

414.03 Job Mix Formula

The Job Mix Formula, JMF shall be determined for each mixture prepared by an Approved Mix Design Laboratory in accordance with 414.04. The Contractor shall submit a JMF for each mixture ~~shall be submitted~~ to the Engineer ~~in an acceptable format at least one~~1 week prior to use. The JMF shall state the maximum particle size in the mixture, and the application rate for any anti-stripping additives. No mixture will be accepted until the JMF is approved.

414.04 Mix Design

The binder content and the percentage of aggregate passing each sieve shall be in accordance with the following requirements:

Mixture Designation – Control Point (Percent Passing)			
	12.5 mm	*9.5 mm*	*4.75 mm*
Sieve Size			
3/4 in. (19.0 mm)	*100.0*	-	-

FINAL DRAFT MINUTES

1/2 in. (12.5 mm)	*85.0 - 100.0*	*100.0*	*-*
3/8 in. (9.5 mm)	*55.0 – 80.0*	*85.0 – 100.0*	*100.0*
No. 4 (4.75 mm)	*22.0 – 38.0*	*22.0 - 38.0*	*40.0 - 55.0*
No. 8 (2.36 mm)	*19.0 - 32.0*	*19.0 - 32.0*	*20.0 - 32.0*
No. 16 (1.18 mm)	*15.0 - 24.0*	*15.0 - 24.0*	*15.0 - 24.0*
No. 30 (600 µm)	*11.0 - 18.0*	*11.0 - 18.0*	*11.0 - 18.0*
No. 50 (300 µm)	*8.0 - 14.0*	*8.0 - 14.0*	*8.0 - 14.0*
No. 100 (150 µm)	*5.0 - 10.0*	*5.0 - 10.0*	*5.0 - 10.0*
No. 200 (75 µm)	*4.0 – 5.5*	*4.0 – 5.5*	*4.0 – 5.5*
Binder Content, %,	*4.6 – 6.1*	*4.8 – 6.1*	*5.0 – 6.3*
*Plan Lay Rate (lb/sq yd)**	*90*	*75*	*65*
** Plan lay rates are based on 100 lb/sq yd/in. using a mixture with a specific gravity of 2.5. Mixtures with different specific gravity will require an adjusted equivalent lay rate.*			

The binder film thickness shall be a minimum of 0.4 mil ~~(10 µm)~~. The binder content of the mix shall be determined by calculating the binder film thickness in accordance with ITM 589.

Drain–down from the loose mixture shall not exceed 0.10% when tested in accordance with AASHTO T 305.

The tensile strength ratio, TSR, shall meet or exceed 80% when tested in accordance with AASHTO T 283[(1)]. Specimens for AASHTO T 283 shall be 6 in. ~~(150 mm)~~ in diameter by 3 3/4 ± 1/4 in. ~~(95 ± 5 mm)~~ height and compacted in accordance with AASHTO T 312, except the specimens shall be compacted to 100 gyrations and resultant air voids reported for information purposes only. The compaction temperatures shall be 300 ± 10°F ~~(150° ± 5°C)~~.

[(1)] Follow AASHTO T 283 with the following exceptions:

(a) Condition the mixture for 2 h in accordance with AASHTO R 30, Section 7.1
(b) Compact the Superpave Gyratory Compactor, SGC, specimens to 100 gyrations
(c) Extrude the samples as soon as possible without damage to the sample
(d) Use AASHTO T 269 to determine the void content
(e) Record the void content of the specimens
(f) If less than 55% saturation is achieved, the procedure does not need to be repeated unless the difference in tensile strength between duplicate specimens is greater than 25 lbs/sq in.

414.05 Use of Recycled Materials

Recycled materials may consist of reclaimed asphalt pavement, RAP, or reclaimed asphalt shingles, RAS or a blend of both. RAP shall be the product resulting

FINAL DRAFT MINUTES

from the cold milling or crushing of an existing HMA pavement. The RAP shall be processed so that 100% will pass the 2 in. (50 mm) sieve when entering the HMA plant. RAS shall be 100% passing the 1/2 in. (12.5 mm) sieve. RAP shall be 100% passing the 3/8 in. (9.5 mm) sieve and 95 to 100% passing the No. 4 (4.75 mm) sieve.

Recycled materials may be used as a substitute for a portion of the new materials required to produce UBWC mixtures. The amount of total binder replaced by binder in the recycled material shall be computed as follows:

$$\text{Binder Replacement, \%} = \frac{(A \times B) + (C \times D)}{E} \times 100\%$$

where:

A = RAP, % Binder Content
B = RAP, % in Mixture
C = RAS, % Binder Content
D = RAS, % in Mixture
E = Total, % Binder Content in Mixture

RAS may be obtained from either pre-consumer or post-consumer asphalt shingles. Post-consumer asphalt shingles shall be in accordance with AASHTO MP 15 and prepared by a processing company with an IDEM Legitimate Use Approval letter. A copy of this letter shall be submitted to the Engineer. Deleterious material present in post-consumer asphalt shingles shall be limited to the percentages stated in AASHTO MP 15. Pre-consumer and post-consumer asphalt shingles shall not be blended for use in UBWC mixtures and shall be stockpiled separately from other materials.

The recycled material percentages shall be as specified on the ~~D~~JMF. UBWC mixtures utilizing recycled materials shall be limited to 25% binder replacement and shall use the specified binder grade.

The combined aggregate properties shall be in accordance with 904. The combined aggregate bulk specific gravity shall be determined in accordance with ITM 584 and the combined aggregate gradation shall be in accordance with ~~the Mix Design section for the UBWC mixture specified~~414.04.

414.06 Quality Control

The Contractor shall produce a mixture ~~that shall be~~ in compliance with the JMF ~~and~~ within the limits of the quality control tolerances. The Contractor shall maintain all quality control documentation and make a copy available to the Engineer upon request or at completion of work.

The Contractor shall sample the mix a minimum once per day in accordance with ITM 580~~, in accordance with~~ section ~~7~~8.6 Truck Samples, Dense Graded HMA Mixture.

FINAL DRAFT MINUTES

The sample shall be tested for binder content and gradation prior to the next day's production.

The Contractor shall take corrective action when the binder content exceeds ± 0.5% from that stated in the JMF as tested in accordance with ITM 586.

The Contractor shall take corrective action when the aggregate gradation exceeds the following values from that stated in the JMF as tested in accordance with AASHTO T 30.

SIEVE SIZE	QUALITY CONTROL TOLERANCES (±), %		
	Mixture Designation – Tolerances		
	12.5 mm	9.5 mm	4.75 mm
3/4 in. (19 mm)	-	-	-
1/2 in. (12.5 mm)	5.0	-	-
3/8 in. (9.5 mm)	-	5.0	-
No. 4 (4.75 mm)	4.0	4.0	5.0
No. 8 (2.36 mm)	4.0	4.0	4.0
No. 16 (1.18 mm)	-	-	4.0
No. 200 (75 µm)	1.0	1.0	1.0

CONSTRUCTION REQUIREMENTS

414.07 Equipment

The equipment shall be in accordance with 409.01, 409.02(a), 409.03(b) and 409.03(d)1 except as follows:

The paver shall be self-priming, designed and built for applying the UBWC. The paver shall have a receiving hopper, feed system, asphalt emulsion storage tank, a calibrated metering system for measuring the emulsion volume applied, spray bar and a heated, variable width, combination vibratory screed or a combination vibratory-tamping bar screed. The paver shall be capable of spraying the asphalt emulsion, applying the asphalt mix and leveling the surface of the mat in one pass. The screed shall have the ability to crown the pavement at the center.

414.08 Preparation of Surface

The Contractor shall be responsible for all surface preparation necessary to meet the performance requirements for ~~the~~ warranted UBWC. All castings and detector housings not identified on the plans as being reset shall be protected prior to the application of material in accordance with 404.07.

414.09 Asphalt Emulsion

The asphalt emulsion shall be applied at a temperature recommended by the emulsion supplier. The asphalt emulsion shall be applied uniformly across the entire

FINAL DRAFT MINUTES

width of pavement to be overlaid. Equipment shall not operate on the applied asphalt emulsion before the asphalt mix is placed.

The recommended plan application rates of the asphalt emulsion are as shown in the table below. Determination of actual application rates shall be the responsibility of the Contractor.

RECOMMENDED ASPHALT EMULSION APPLICATION RATE AND ADJUSTMENT FACTORS FOR SURFACE CONDITIONS			
	Mixture Designation		
	12.5 mm	*9.5 mm*	*4.75 mm*
General application rate, gal./sq yd	*0.20*	*0.17*	*0.14*
Existing Surface Condition	*Recommended adjustment to application rate, gal./sq yd*		
PCCP, smooth or polished	*-0.03*	*-0.03*	*-0.03*
PCCP, broomed or textured	*0*	*0*	*0*
Flushed asphalt concrete surface	*-0.02*	*-0.03*	*-0.03*
Dense, unaged asphalt concrete surface	*0*	*0*	*0*
Open textured, dry, aged or oxidized asphalt concrete surface	*+0.02*	*+0.01*	*+0.01*
Milled asphalt concrete surface	*+0.02*	*+0.01*	*+0.01*

414.10 Pre-Paving Meeting

A pre-paving meeting between the Engineer and the Contractor will be held on-site prior to beginning work. The following shall be reviewed:

(a) Work schedule
(b) Traffic control plan
(c) Equipment calibrations and adjustments
(d) Inspection and evaluation of the condition and adequacy of equipment, including units for transport of materials
(e) Job Mix Formula
(f) Contractor's proposed emulsion and mix application rates
(g) Quality ~~c~~Control ~~p~~Plan
(h) Contractor's authorized representative

414.11 Mixture Placement

The UBWC shall be prepared and placed at temperatures recommended by the binder supplier. ~~Care shall be taken to avoid excessive~~ ~~f~~Fracturing of aggregates shall be avoided.

414.12 Mixture Finishing

Three passes of rollers capable of exerting at least 150 lb/in. and in conformance with 409.03(d)1 shall be applied to the UBWC before the material has cooled below

FINAL DRAFT MINUTES

185 °F ~~(85 °C)~~. A release agent may be added to the water system of the rollers to prevent adhesion of the material to the roller drum. Rollers shall not operate in vibratory mode.

414.13 Smoothness

All finished surface irregularities in excess of 1/8 in. measured with a 10 ft straightedge shall be corrected.

The lane edge shall have no more than 2 in. of horizontal variance in 100 ft. ~~Pavement smoothness shall be in accordance with 401.18 except profilograph requirements will not apply. Smoothness requirements shallwill not apply to shoulder UBWC placed separately.~~

414.14 Warranty

A warranty bond is to insure completion of required warranty work, including payments for all labor, materials, equipment, and incidentals necessary or convenient to the successful completion of the project and the carrying out of the duties and obligations imposed by the contract used to remediate any warranted distresses.

The Contractor shall provide a warranty bond equal to 100% of the contract total for the warranted UBWC pay items. The warranty bond shall be in effect for 3 years from the date of substantial completion. ~~Upon completion of all warranted UBWC and opening to unrestricted traffic, the warranty bond shall be in effect for a total of 3 years.~~ The warranty bond shall be properly executed by a surety ~~company~~ satisfactory to the Department and be payable to the State of Indiana and submitted with the Contractor's bid.

~~The warranty bond shall be an amount equal to 100% of the contract total for the warranted UBWC pay items. The bond is intended to insure completion of required warranty work, including payments for all labor, equipment, materials, and closure periods used to remediate any warranted distresses.~~

Upon the final acceptance of the project, the contractual obligations of the Contractor are satisfied as long as the UBWC continues to meet or exceed the warranted values as defined herein.

All warranty work shall be accomplished in accordance with 414.16. At the end of the warranty period, the Contractor will be released from further warranty work or responsibility, provided all previous warranty work has been satisfactorily completed and approved by the Department.

414.15 Conflict Resolution Team

The scope of work for the conflict resolution team includes all issues concerning the warranted pavement relative to the quality control plan, material selection, warranted pavement evaluations, distress indicators, remedial action, and remediation plans.

REVISION TO SPECIAL PROVISIONS

PROPOSED NEW 414-X-XXX ULTRATHIN BONDED WEARING COURSE, WARRANTED

The team will consist of 2 Contractor representatives, 2 Department representatives, and ~~1~~an additional person mutually agreed upon by both the Department and the Contractor. All costs for the ~~5th~~additional person will be equally shared ~~between~~by the Department and the Contractor.

The team members will be identified in writing when needed and will be knowledgeable in the terms and conditions of this warranty and the methods used in the measurement and calculation of pavement distress. The team will render a final recommendation to the Chief Engineer by a majority vote. Each member has an equal vote.

414.16 Warranty Work

Elective work is performed by the Contractor at its discretion to meet the performance requirements of warranted UBWC prior to direction from the Department for the Contractor to perform remedial work.

Remedial work is performed as a result of pavement distress surveys performed by the Department.

During the warranty period, elective~~/preventive~~ work and remedial work shall be performed at no cost to the Department. ~~Elective/preventive work is performed as a result of monitoring of the warranted UBWC by the Contractor.~~ Elective~~/preventive~~ work shall be at the Contractor's option. ~~Remedial work is performed as a result of pavement distress surveys performed by the Department.~~ The scope of all elective~~/preventive~~ work or remedial work to be performed as well as materials to be used shall be proposed by the Contractor and ~~approved~~shall be subject to approval by the Department. Prior to proceeding with any warranty work or monitoring, all necessary permits shall be obtained from the Department.

~~Remedial/Warranty~~Elective work ~~initiated by the Contractor~~ during the warranty period will not be assessed a lane closure fee. For ~~Department initiated warranty~~remedial work, costs for closure periods will be applied using the following closure period rates:

~~Peak Hour~~ From ____ to ____: ..... $xxxxxx/lane/hour
~~Non – Peak Hour~~ From ____ to ____: ..... $xxxxxx/lane/hour

During the warranty period, the Contractor may monitor the warranted UBWC using non-destructive procedures.

Coring, milling or other destructive procedures may not be performed by the Contractor, without prior consent of the Department. The Contractor will not be responsible for damages to the pavement as a result of coring, milling or other destructive procedures conducted by the Department.

FINAL DRAFT MINUTES

REVISION TO SPECIAL PROVISIONS

PROPOSED NEW 414-X-XXX ULTRATHIN BONDED WEARING COURSE, WARRANTED

The Contractor ~~will have~~ has the first option to perform the remedial work. If~~, in the opinion of the Engineer,~~ the problem requires immediate attention, as determined by the Engineer, for safety of the traveling public and the Contractor cannot perform the remedial work within 24 h of notification, the Department ~~has the option to have emergency~~will perform the remedial work ~~performed by other forces~~. The Contractor shall be responsible for all costs incurred by the Department for ~~emergency~~ remedial work performed by the Department. Remedial work performed by ~~other forces~~the Department will not alter the requirements, responsibilities, or obligations of the warranty.

414.17 Pavement Distress Indicators, Thresholds and Remedial ~~Action~~Work

The Department will use the following pavement distress indicators throughout the warranty period:

(a) Delamination – physical separation of the UBWC that exposes the underlying surface
(b) Rutting – transverse displacement of the UBWC
(c) Raveling – wearing away of the UBWC
(d) Skid Resistance - friction number as measured by ASTM E 274 and E 524

The pavement threshold values for the pavement distress indicators will be evaluated for the entire length of the ~~contract~~project for each lane. The threshold values for the pavement distress indicators are listed below:

Distress	*Single Location*	*Multiple Locations*
Delamination/Raveling	*1/2 sq yd*	*1 sq yd/mi*
Rut Depth	*1/4 in.*	*average 1/4 in./mi*
*Friction Number**	*no less than 30*	*average 35*

** Individual friction tests will be performed in each lane every 1/2 mi for the length of the ~~contract~~project.*

The Department may evaluate the warranted UBWC during the warranty period. A final condition survey will be made by the Department and the Contractor will be notified in writing of all sections exceeding the warranty threshold at least 90 days in advance of the expiration of the warranty period.

If the Department determines that any ~~of the~~ threshold level~~s are~~has been met or exceeded and remedial work is required, the Contractor shall ~~proposed remedial action~~submit a work plan and ~~work~~ schedule to the ~~Department~~Engineer for approval. ~~After the proposed remedial action and work schedule is approved, t~~The Contractor shall perform the remedial work within 30 calendar days of notification of approval by the Engineer.

FINAL DRAFT MINUTES

REVISION TO SPECIAL PROVISIONS

PROPOSED NEW 414-X-XXX ULTRATHIN BONDED WEARING COURSE, WARRANTED

If, anytime during the warranty period, 30% or more of the project requires, or has received remedial ~~action~~work, remedial work as determined by the Department shall be performed on the entire project ~~shall receive a remedial action as determined by the Contractor and the Department. If an impasse develops, the team will make a final recommendation~~.

If remedial ~~action~~or elective work ~~or elective/preventive action work~~ performed by the Contractor necessitates ~~a corrective action to the~~repair or replacement of pavement markings, adjacent lanes or roadway shoulders, the required ~~corrective action~~work shall be the responsibility of the Contractor.

Warranty requirements for all ~~remediation~~elective and remedial work will be limited to the life of the original contract warranty.

~~*If any of the threshold levels are met or exceeded and the Contractor does not agree to the pavement distress survey or the Department does not agree with the proposed remedial action, the team will provide a recommendation within 30 calendar days.*~~

~~*The Contractor will not be held responsible for distresses that are caused by factors beyond the control of the Contractor. The Contractor shall be responsible for materials and workmanship problems*~~.

414.18 Department Maintenance

The Department ~~will~~may perform routine maintenance operations during the warranty period ~~such~~including, but not limited to, ~~as~~ plowing, applying de-icing chemicals, repairs to safety appurtenances, pavement markings, mowing and sign maintenance. The Department, during the warranty period, will perform no routine pavement surface maintenance activities.

414.19 Method of Measurement

~~*The UBWC*~~*Ultrathin bonded wearing course, of the type specified, will be measured by the square yard ~~(square meter)~~ in accordance with 109.01.*

414.20 Basis of Payment

~~*The accepted quantities for this work*~~*Ultrathin bonded wearing course, of the type specified, will be paid at the contract unit price per square yard ~~(square meter)~~.*

~~*The accepted quantities for UBWC approaches will be paid for at the contract unit price per square yard (square meter), of UBWC, warranted, for approaches complete in place.*~~

Payment will be made under:

Pay Item	***Pay Unit Symbol***

FINAL DRAFT MINUTES

REVISION TO SPECIAL PROVISIONS

PROPOSED NEW 414-X-XXX ULTRATHIN BONDED WEARING COURSE, WARRANTED

Ultrathin Bonded Wearing Course for Approaches, _____mm.....SYS ~~(m2)~~
size

Ultrathin Bonded Wearing Course, _____mm.....SYS ~~(m2)~~
size

The cost of all incidentals including, but not limited to, surface preparation, meeting smoothness requirements, and warranty bond shall be included in the cost of the pay items.

414.21 Final Warranty Acceptance

The Engineer will review the project in the field for any general defects not addressed in the indicators and recommend a Final Warranty Acceptance. The ~~Division of Construction Management~~Department will issue the Contractor a Final Warranty Acceptance letter upon completion of the warranty period and all required remedial work.

FINAL DRAFT MINUTES

REVISION TO SPECIAL PROVISIONS

BACKUP 01.DESIGN MEMORANDUM NO._ ULTRATHIN BONDED WEARING COURSE (DRAFT)

INDIANA DEPARTMENT OF TRANSPORTATION

Driving Indiana's Economic Growth

Design Memorandum No. __
Technical Advisory

May 10, 2011 DRAFT

TO: **All Design, Operations, and District Personnel, and Consultants**

FROM: **Todd Shields**
Manager, Office of Technical Services
Highway Operations Division

SUBJECT: **Ultrathin Bonded Wearing Course**

REVISES: ***Indiana Design Manual* Section 52-11.01**
5. Ultrathin Bonded Wearing Course

EFFECTIVE: **, 2011, Letting**

Ultrathin Bonded Wearing Course design guidelines have been revised and is attached.

5. Ultrathin Bonded Wearing Course. Ultrathin bonded wearing course (UBWC) is a gap-graded, ultrathin hot-mix asphalt mixture applied over a thick polymer-modified asphalt emulsion membrane. The emulsion membrane seals the existing surface and produces high binder content at the interface of the existing roadway surface. The gap-graded mix is placed with the emulsion membrane in one pass. Core data and life cycle cost data should be reviewed with the Office of Pavement Engineering for specific recommendations.

   All thermoplastic pavement markings and raised pavement markers are to be removed prior to placement of a UBWC. The removal quantities should be included in the appropriate pavement-marking-removal pay-items quantities.

FINAL DRAFT MINUTES

REVISION TO SPECIAL PROVISIONS

BACKUP 01.DESIGN MEMORANDUM NO._ ULTRATHIN BONDED WEARING COURSE (DRAFT)

The pay item for UBWC should specify the gradation size as 4.75 mm, 9.5 mm, or 12.5 mm.

If public road or other approaches require surfacing with UBWC, those areas should be included as separate pay items (i.e. UBWC for approaches).

Since the type of aggregate used in a UBWC is dependent on ESAL's, mainline ESAL's need to be shown on the traffic data block on the title page of the plans.

The designer should identify any existing surface irregularities, including bumps, in the plans that need to be addressed and should be included in the cost of other items.

The Warranted UBWC spec requires a Lane rental cost be included. Section 81-3 of the Indiana Design Manual provides guidance on obtaining lane rental costs. Figure 81-3D Part B includes the calculations which can be used to determine the ~~peak hour and off-peak~~ hourly lane rental rates.

a. AADT. UBWC may be used without regard to traffic volume.

b. Pavement Distresses. A UBWC may be used on a road with low to moderate severity surface cracks. Cracks should be sealed prior to the application of a UBWC. Cracks wider than ¼ in. may need to be routed prior to sealing.

c. Rutting. UBWC does not significantly correct rutting and should not be specified where existing ruts are greater than 0.25 in.

d. Roughness. The IRI should be 140 or less. The pavement should not have severe distresses indicative of a pavement nearing the end of its life. UBWC will moderately improve surface roughness.

e. Friction. A pavement with a low FN may be considered for a surface treatment. A UBWC will restore surface friction.

f. Surface Aging. A UBWC may be used to stop future deterioration of an asphalt pavement due to age hardening, oxidation, or moderate raveling.

A UBWC project should be reviewed and approved by the Pavement Steering Committee. A life-cycle cost analysis in accordance with Section 52-12.0 should be completed.

FINAL DRAFT MINUTES

COMMENTS AND ACTION

414-X-XXX ULTRATHIN BONDED WEARING COURSE, WARRANTED

DISCUSSIONS: Mr. Shields, sitting in for Mr. Andrewski, presented this item and asked that it be approved as a Recurring Special Provision. Mr. Shields also stated that this RSP is consistent in language to the micro-surfacing spec in regards to warranty work. The warranty portion and other items similar to micro-surfacing will need reworked and revised to reflect the proposed editorial revisions which will be made in the micro-surfacing provision.

Mr. Uremovich requested clarification concerning the reference to ITM 584. Mr. Uremovich also recommended an editorial revision to section 414.11 regarding avoiding fracturing the aggregates. Also, changed *shall* to *will* in 414.13. Mr. Heustis assisted with revising section 414.16 "*The Contractor has the first option…*". Also, in 414.19, changed *shall* to *will*.

Further, the reference to the *Division of Construction Management* was replaced with the *Department* in 414.21. Mr. Shields also handed out copies of the Design Memo for the UBWC.
Changes to the proposed RSP hand a copy of the Design Memo for UBWC are shown in these Minutes.

Motion: Mr. Shields Second: Mr. Anderson Ayes: 9 Nays: 0	Action: ____ Passed as Submitted _X_ Passed as Revised ____ Withdrawn
Standard Specifications Sections affected: NONE Recurring Special Provision affected: NONE Standard Sheets affected: NONE Design Manual Sections affected: NONE GIFE Sections cross-references: NONE	____ 20__ Standard Specifications Book ____ Revise Pay Items List _X_ Create RSP (No. 414-R-590) Effective April 01, 2012 Letting RSP Sunset Date: _? ____ Revise RSP (No.____) Effective ____Letting RSP Sunset Date: ____ Standard Drawing Effective ____ ____ Create RPD (No. ____) Effective ____Letting ____ Technical Advisory GIFE Update Req'd.? Y ___ N ___ By ____ Addition or ____ Revision Frequency Manual Update Req'd? Y___N___ By ____ Addition or ____ Revision Received FHWA Approval? Yes

FINAL DRAFT MINUTES