INDIANA DEPARTMENT OF TRANSPORTATION
Driving Indiana's Economic Growth

100 North Senate Avenue
Room N925
Indianapolis, Indiana 46204

PHONE: (317) 232-5502
FAX: (317) 234-5133

Mitchell E. Daniels, Jr., Governor
Michael B. Cline, Commissioner

APPROVED MINUTES

July 21, 2011 Standards Committee Meeting

APPROVED MINUTES

MEMORANDUM

August 26, 2011

TO: Standards Committee

FROM: Scott Trammell, Secretary

RE: Minutes from the July 21, 2011 Standards Committee Meeting

A Standards Committee meeting was called to order by Mr. Miller at 09:00 a.m. on July 21, 2011 in the N955 Bay Window Conference Room.
The meeting was adjourned at 10:28 a.m.

The following committee members were in attendance:

Mark Miller, Chairman
Jim Keefer, Fort Wayne Dist.
Brian Zafar*, Product. Mgmt.
Greg Pankow, Const. Mgmt.
Dave Boruff, Traffic Admin.
Ron Walker, Materials Mgmt.
Randy Strain, Str. Services

**Proxy for John Wright*

Also in attendance were the following:

Tony Perkinson, FHWA
Steve Fisher, INDOT SiteMgr
Paul Berebitsky, ICA
Alfredo Hanza, INDOT
Scott Trammell, Secretary
Tony Uremovich, INDOT
Dudley Bonte, Rieth-Riley (APAI)
Patel Prakash, INDOT

The following agenda items were considered — Page No.

A. GENERAL BUSINESS ITEMS

OLD BUSINESS

(No items considered*)*

NEW BUSINESS

The committee was informed that the annual Civil Engineering Professional Development seminar at Purdue occurs on November 17, 2011, so the November meeting will take place on Wednesday, November 16, 2011, in Room N955.

Also, the APAI Winter Conference occurs on the same date as the December meeting, and that new meeting date will be determined.

B. CONCEPTUAL PROPOSAL ITEMS

1. LIGHTWEIGHT CONCRETE IN PRESTRESSED CONCRETE BEAMS page 05

DISCUSSION: This item was introduced by Mr. Strain, who explained that the lightweight concrete committee met and discussed issues concerning the unit weight of the mix, as described in the proposal below.

It had been determined that the designers were missing the unit weight by 20-25 lbs in their mix designs. The desire is to revisit and establish an RSP for the determination of actual lightweight concrete mix design criteria.

Mr. Miller and Mr. Walker offered that using the fine lightweight aggregates makes it actually a semi-lightweight concrete mix. The self cured concrete has the fine aggregate and is used for bridge decks. Mr. Strain asked about concerns about curing and Mr. Walker responded that it depends on weather and temperature. Mr. Strain said they'd like to give the designers as many options as possible to optimize costs associated with the mix designs.

Further discussion by Mr. Walker and Mr. Strain concerning the implementation of fine aggregates and air cooled blast furnace slag.

Mr. Strain said he had mentioned this item to the structural design committee, and that some of the designers for precast units had considered lightweight concrete as their first choice.

Mr. Miller offered that semi-lightweight concrete may be a better choice for bridge decks due to material availability and constructability.

C. STANDARD SPECIFICATIONS, PROVISIONS AND STANDARD DRAWINGS PROPOSED ITEMS

OLD BUSINESS

Item No. 04(b) 04/19/11 (2012 SS)	Mr. Walker	page 06
503.02	Materials	
503.04	Dowel Bar Assemblies	
506.02	Materials	
507.02	Materials	

ACTION: PASSED AS REVISED

NEW BUSINESS

Item No. 01 07/21/11 (2012 SS)	Mr. Wright	page 11
805.03	General Requirements	
805.04	Pole Installation	
805.05	Placing Signal Heads	
805.13	Foundations	

APPROVED MINUTES

805.15	Method of Measurement
805.16	Basis of Payment

Recurring Special Provision

922-T-168	TRAFFIC SIGNAL MATERIALS AND EQUIPMENT

Standard Drawings

805-TSCS-01	*TRAFFIC SIGNAL CANTILEVER STRUCTURE SIGNAL ARM DIMENSIONS & DETAILS*
805-TSCS-02	*TRAFFIC SIGNAL CANTILEVER STRUCTURE POLE DIMENSIONS AND DETAILS ELEVATION*
805-TSCS-03	*TRAFFIC SIGNAL CANTILEVER STRUCTURE BASE PLATE, BOTTOM SPLICE PLATE DETAILS*
805-TSCS-04	*TRAFFIC SIGNAL CANTILEVER STRUCTURE SIGNAL ARM CONNECTION DETAILS*
805-TSCS-05	*TRAFFIC SIGNAL CANTILEVER STRUCTURE HANDHOLE DETAILS*
805-TSCS-06	*TRAFFIC SIGNAL CANTILEVER STRUCTURE PLACEMENT OF SIGNALS AND SIGNS LOADING FOR ARM 35′ OR LESS*
805-TSCS-07	*TRAFFIC SIGNAL CANTILEVER STRUCTURE PLACEMENT OF SIGNALS AND SIGNS LOADING FOR ARMS > 35′ TO 60′*
805-TSCS-08	*TRAFFIC SIGNAL CANTILEVER STRUCTURE COMBINATION ARM DIMENSIONS & DETAILS*
805-TSCS-09	*TRAFFIC SIGNAL CANTILEVER STRUCTURE COMBINATION POLE DIMENSIONS AND DETAILS ELEVATION*
805-TSCS-10	*TRAFFIC SIGNAL CANTILEVER STRUCTURE COMBINATION ARM CONNECTION DETAILS*
805-TSCS-11	*TRAFFIC SIGNAL CANTILEVER STRUCTURE COMBINATION POLE SPLICE DETAILS FOR ARMS 35′ OR LESS*
805-TSCS-12	*TRAFFIC SIGNAL CANTILEVER STRUCTURE COMBINATION POLE SPLICE DETAILS FOR ARMS > 35′ TO 60′*
805-TSCS-13	*TRAFFIC SIGNAL CANTILEVER STRUCTURE COMBINATION ARM LOADING FOR 35′ ARM OR LESS*
805-TSCS-14	*TRAFFIC SIGNAL CANTILEVER STRUCTURE COMBINATION ARM LOADING FOR ARMS > 35′ TO 60′*
805-TSCS-15	*TRAFFIC SIGNAL CANTILEVER STRUCTURE DRILLED SHAFT FOR ARMS 35′ OR LESS TYPE A*
805-TSCS-16	*TRAFFIC SIGNAL CANTILEVER STRUCTURE DRILLED SHAFT FOR ARMS > 35′ TO 60′ TYPE B*
805-TSCS-17	*TRAFFIC SIGNAL CANTILEVER STRUCTURE SPREAD FOUNDATION FOR ARMS 35′ OR LESS TYPE C*
805-TSCS-18	*TRAFFIC SIGNAL CANTILEVER STRUCTURE SPREAD FOUNDATION FOR ARMS > 35′ TO 60′ TYPE D*

Indiana Design Manual

Chapter 77-4.03	Signal Mounting

ACTION: WITHDRAWN

APPROVED MINUTES

406.02	Materials
507.05(b)	Partial Depth Patching
902.01(b)	Asphalt Emulsions

ACTION: PASSED AS SUBMITTED

cc: Committee Members (11)
FHWA (3)
ICA (1)

APPROVED MINUTES

Mr. Strain
Date: 07/21/11

CONCEPTUAL PROPOSAL

1. LIGHTWEIGHT CONCRETE IN PRESTRESSED CONCRETE BEAMS

PROPOSAL TO STANDARDS COMMITTEE

PROBLEM(S) ENCOUNTERED: INDOT has used semi-lightweight concrete in prestressed concrete beams in order to reduce the weight of the beam. The reduction in weight would allow the span of the beam to be increased. The ad-hoc committee assembled to write a recurring special provision for this material found that there were only a couple of states that use semi-lightweight concrete. The majority of states use lightweight concrete. The ad-hoc committee also found research that indicated that the actual increases in span were negligible, approximately three percent. Designers were of the opinion that the increases in span were much greater but in many cases these increases were due to under estimating the actual weight of the concrete and neglecting the weight of the steel reinforcing and the prestressing strands. Some designers may also have overlooked the reduction factors which the AASHTO Bridge Design Specifications require when using lightweight concrete.

PROPOSED SOLUTION: Through the direction of the Standards Committee, it is proposed that the ad-hoc committee assembled to produce a recurring special provision for semi-lightweight concrete be approved to develop a recurring special provision for lightweight concrete. Lightweight concrete has a unit weight of 90 to 115 lb/ft^3 compared to normal weight concrete with a density of 140 to 150 lb/ft^3. The concrete mixture is made with lightweight coarse aggregate and in most cases the fine aggregate is a lightweight product as well. The lightweight aggregates are typically expanded shale, clay or slate materials that have been fired in a rotary kiln to develop a porous structure. Other products such as air cooled blast furnace slag are also used. There are several research projects and state specifications that can aid the ad-hoc committee in selecting the desired mix design to obtain a lightweight concrete that provides an efficient strength-to-weight ratio and provide significant advantages over semi-lightweight concrete.

APPLICABLE STANDARD SPECIFICATIONS: 707

APPLICABLE STANDARD DRAWINGS: N.A.

APPLICABLE DESIGN MANUAL SECTION: N.A.

APPLICABLE SECTION OF GIFE: N.A.

APPLICABLE RECURRING SPECIAL PROVISIONS: Create new 707 RSP

PAY ITEMS AFFECTED: None

Submitted By: Randy Strain
Title: Bridge Standards and Policy Engineer
Organization: INDOT Technical Support
Phone Number: 232-3339
Date: 06-23-11
APPLICABLE SUB-COMMITTEE ENDORSEMENT: ASCE-INDOT Structural Subcommittee

APPROVED MINUTES

REVISION TO STANDARD SPECIFICATIONS

PROPOSAL TO STANDARDS COMMITTEE

PROBLEM(S) ENCOUNTERED: The following PCCP items require revisions to section 503:

1. Dowel Bar Protection (503.02, 506.02, 507.02) - The requirements for exposure of bent and straight tie bars from ultraviolet light and moisture for no more than 21 days are also applied for dowel bars. Epoxy coatings commonly used for dowel bars are not sensitive to ultraviolet light or moisture for periods much longer than the 21 days. With anticipation that a very large number of dowel bars will be needed for upcoming concrete projects and that the dowel bars will be commonly stored for more than 21 days, the 21 day restriction should be removed. The other requirements of being free of dirt, loose rust, or scale at the time of concrete placement will still apply. The Project Engineer will have the option of testing the dowel bars if there is suspect that the epoxy coating has been damaged by ultraviolet light.

2. Tie Wires (503.04) - Tie wires which parallel the dowel bars and are welded to the two continuous parallel spacer bars are required to be cut near the center of the tie after the dowel bar assembly is secured in place. The intent of this requirement is to eliminate or reduce the potential of the tie wires to lock the joint, or for the wires to cause micro-surface cracks in the early ages of the concrete. Recent studies have indicated that the tie wires themselves will yield or the welds holding the wires to the basket will fail before they cause damage to the concrete or lock the joint. The benefit of not cutting the tie wires is that uncut tie wires keep the dowels and dowel baskets in better alignment, and more resistant to deflection while paving resulting in smoother pavement.

PROPOSED SOLUTION: The following revisions are recommended to be authorized and made effective by a Recurring Special Provision.

1. Remove the 21 day restrictions for protecting the dowel bars from ultraviolet light and moisture and add the option for the Engineer to sample and test the dowel bars if there is suspect that there is ultraviolet damage.

2. Remove the requirement to cut the tie wires prior to the placement of the concrete. Add a requirement for the maximum size and number of tie wires.

APPLICABLE STANDARD SPECIFICATIONS: 503.02, 506.02, 507.02, and 503.04

APPLICABLE STANDARD DRAWINGS: None

APPLICABLE DESIGN MANUAL SECTION:

APPLICABLE SECTION OF GIFE: Section 8

APPROVED MINUTES

REVISION TO STANDARD SPECIFICATIONS

(CONTINUED)

APPLICABLE RECURRING SPECIAL PROVISIONS: None

Submitted By: Ron Walker

Title: Manager, Office of Materials Management

Organization: INDOT

Phone Number: 317-610-7251 x 204

Date: 7-11-11

APPLICABLE SUB-COMMITTEE ENDORSEMENT? These specification revisions are recommended by the INDOT/PCCP Technical Committee.

APPROVED MINUTES

REVISION TO STANDARD SPECIFICATIONS (OLD BUSINESS ITEM)

SECTION 503 - PCCP JOINTS
503.02 MATERIALS
503.04 DOWEL BAR ASSEMBLIES
SECTION 506 - PCCP PATCHING
506.02 MATERIALS
SECTION 507 - PCCP RESTORATION
507.02 MATERIALS

The Standards Specifications are revised as follows:

SECTION 503, BEGIN LINE 25, DELETE AS FOLLOWS:

The epoxy coating on the ~~dowel bars and~~ bent and straight tie bars shall be protected in accordance with 703.04.

SECTION 503, BEGIN LINE 174, DELETE AND INSERT AS FOLLOWS:

(c) Suitable struts or tie~~s~~ *wires* shall be provided to hold the assembly in correct position during installation. *The tie wires shall be size W 7.5 (7 mm) or smaller and there shall be a maximum of 5 tie wires for each dowel bar assembly.*

(d) The assembly shall have an upright support welded to the spacer bar and a continuous bearing member at the end of each dowel.

(e) If the upright support consists of a single vertical wire, the support shall be size W 7.5 (7 mm) or greater wire. Otherwise, the support shall be 1/4 in. (6 mm) or greater in diameter.

(f) At the time of placement, dowel bars shall be free of dirt, loose rust, or scale. If the Engineer suspects the epoxy coating has been damaged by exposure to ultraviolet light, a sample will be obtained and will be tested in accordance with 910.01(b)9.

(~~f~~*g*) The dowel bar assembly shall be held securely in place during placing, consolidating, and finishing the PCCP by means of metal pins. Pins used on granular subbase shall penetrate a minimum of 12 in. (300 mm) below the dowel bar assembly. Pins shall be size W 7.5 (7 mm) or greater wire and shall be provided with a hook or arm welded to the pin so that it shall secure the assembly in place. A minimum of 8 pins shall be used for each 10, 11, or 12 ft (3.0, 3.4, or 3.7 m) section of assembly. A minimum of 10 pins shall be used for assembly sections greater than 12 ft (3.7 m) and less than or equal to 16 ft (4.9 m).

(~~g~~*h*) ~~After the dowel bar assembly is securely in place, all tie wires which parallel the dowel bars, and are welded to the 2 continuous parallel spacer bars, shall be cut near the center of the tie~~. Dowel bars shall be coated with a bond breaking material and the coating shall be evident at the time of placement of the PCCP.

(~~h~~*i*) Dowel bars shall be placed 6 in. (150 mm) from the edges of the pavement and spaced at 1 ft (0.3 m) on center across the joint.

APPROVED MINUTES

REVISION TO STANDARD SPECIFICATIONS (OLD BUSINESS ITEM)

SECTION 503 - PCCP JOINTS
503.02 MATERIALS
503.04 DOWEL BAR ASSEMBLIES
SECTION 506 - PCCP PATCHING
506.02 MATERIALS
SECTION 507 - PCCP RESTORATION
507.02 MATERIALS

SECTION 506, BEGIN LINE 29, DELETE AND INSERT AS FOLLOWS:

~~The epoxy coating on the dowel bars shall be protected in accordance with 703.04.~~ *Dowel bars shall be in accordance with 503.04(f).*

SECTION 507, BEGIN LINE 19, DELETE AND INSERT AS FOLLOWS:

~~The epoxy coating on the dowel bars shall be protected in accordance with 703.04.~~ *Dowel bars shall be in accordance with 503.04(f).*

APPROVED MINUTES

COMMENTS AND ACTION (OLD BUSINESS ITEM)

503.02 MATERIALS
503.04 DOWEL BAR ASSEMBLIES
506.02 MATERIALS
507.02 MATERIALS

DISCUSSION: Mr. Walker introduced this item and asked that the first sentence in paragraph (h) in section 503 was presented in the agenda incorrectly and to be deleted as it shown in these minutes.

Mr. Walker also discussed and explained the effects of weather on the coating of the epoxy coated dowel bars. Mr. Miller asked if all bars are sprayed with the protective coating. Mr. Walker answered that most of them are but not all, since it is not required. Mr. Walker also offered that upon testing and observations, the epoxy coating was not showing any signs of deteriorating after 1 year.

Mr. Walker also explained the revision in relation to the tie wires, concerning the number of wires, cutting and the size of the tie wires. All of which helps the assembly stay in place.

A motion was made by Mr. Walker to pass this item as revised.

Mr. Pankow said we'll also need to check the GIFE on this for possible additions or revisions.

Motion: Mr. Walker Second: Mr. Keefer Ayes: 6 Nays: 0	Action: ____ Passed as Submitted _X_ Passed as Revised ____ Withdrawn
Standard Specifications Sections affected: 503.02 pg 325; 503.04 pg 328; 506.02 pg 335; 507.02 pg 343. Recurring Special Provision affected: NONE Standard Sheets affected: NONE Design Manual Sections affected: NONE GIFE Sections cross-references: SECTION 8	_X_ 2014 Standard Specifications Book ____ Revise Pay Items List _X_ Create RSP (No.503-R-582) Effective November 01, 2011 Letting RSP Sunset Date: ____ ____ Revise RSP (No.____) Effective ____Letting RSP Sunset Date: ____ Standard Drawing Effective ____ ____ Create RPD (No. ____) Effective ____Letting ____ Technical Advisory GIFE Update Req'd.? Y _X_ N ___ By ____ Addition or ____ Revision Frequency Manual Update Req'd? Y___N___ By ____ Addition or ____ Revision Received FHWA Approval? Yes

APPROVED MINUTES

SPECIFICATION REVISIONS

REVISION TO STANDARD SPECIFICATIONS, PROVISION AND STANDARD DRAWINGS

PROPOSAL TO STANDARDS COMMITTEE

PROBLEM(S) ENCOUNTERED: Existing Signal Mast Arm standard drawings doesn't meet the latest AASHTO code requirements.

PROPOSED SOLUTION: New Signal Cantilever Structures and foundation standard drawings were developed meeting the latest AASHTO code (2009 fifth edition) requirements.

APPLICABLE STANDARD SPECIFICATIONS: 805, 922

APPLICABLE STANDARD DRAWINGS: New Standard Drawings 805-TSCS-01 thru 18

APPLICABLE DESIGN MANUAL SECTION: 77-4.03

APPLICABLE SECTION OF GIFE: N.A.

APPLICABLE RECURRING SPECIAL PROVISIONS: 805-T-169, 922-T-168

PAY ITEMS AFFECTED: Revision to the related pay items is in the attached 805 section.

Submitted By: John Wright

Title: Director of Highway and Tech Support

Organization: INDOT

Phone Number: 317-232-5147

Date: 6/22/2011

APPLICABLE SUB-COMMITTEE ENDORSEMENT: Ad hoc review by industry, subcommittee from INDOT traffic section, Traffic System Division.

APPROVED MINUTES

REVISION TO STANDARD SPECIFICATIONS, PROVISION AND STANDARD DRAWINGS

SECTION 805 - TRAFFIC SIGNALS
805.03 GENERAL REQUIREMENTS
805.04 POLE INSTALLATION
805.05 PLACING SIGNAL HEADS
805.13 FOUNDATIONS
805.15 METHOD OF MEASUREMENT
805.16 BASIS OF PAYMENT

(Underlined changes have been approved on May 05, 2008)

The Standard Specifications are revised as follows:

SECTION 805, BEGIN LINE 79, DELETE AND INSERT AS FOLLOWS:

All existing painted signal equipment to be reused, such as pedestals, bases, controller cabinets, signal heads, signal weatherheads, pipe arms, shall be cleaned and painted with 2 coats of highway yellow enamel. Aluminum poles and ~~mast arms~~*signal support structures* shall not be painted.

SECTION 805, BEGIN LINE 146, DELETE AND INSERT AS FOLLOWS:

805.04 Pole Installation

Working drawings for strain poles or cantilever structures shall be provided in accordance with 105.02. Metal poles shall be erected on concrete foundations and shall be reasonably plumb after installation of signal heads. The handhole side of the pole shall be at right angles to the direction of the ~~mast~~*signal cantilever* arm or span, catenary, and tether. Signal cables shall be brought up inside the poles. Any steel pole, ~~mast~~*signal cantilever* arm, or hardware not galvanized or painted with baked enamel shall be painted with 2 coats of rust inhibiting aluminum paint. Paint shall be applied in accordance with 619 with the exception that commercial blast cleaning of the steel will not be required. All rust, scale, and dirt shall be cleaned from the metal surface so that paint adheres to the surface.

SECTION 805, BEGIN LINE 162, DELETE AND INSERT AS FOLLOWS:

805.05 Placing Signal Heads

~~Mast~~ *Signal cantilever* arm and span mounted signal heads shall have 17 ft (5.2 m) minimum and 19 ft (5.8 m) maximum clearance over the roadway unless there are visual obstructions which require lowering the signal head. A signal head over the roadway shall not have a clearance of less than 15 ft (4.6 m). Such signal heads shall be located over the intersection as shown on the plans. Such signal heads shall have a

SECTION 805, BEGIN LINE 436, DELETE AND INSERT AS FOLLOWS:

805.13 Foundations

Foundations for traffic signal ~~poles~~*structures*, cabinets, and pedestals of the type specified shall be constructed, or existing M foundations shall be modified, as shown on the plans or as directed. Pedestal bases shall be plumb and firmly attached to the anchor bolts either by using leveling nuts or shims if top of the foundation is not level. Grouting shall be used when necessary to fill any gap between pedestal base and foundation. Pipe pedestals shall be screwed tightly into the bases and secured with a stainless steel pin. Power and signal cables shall then be pulled from the base into the cabinet. Curing of concrete shall be in accordance with 702.22.

APPROVED MINUTES

REVISION TO STANDARD SPECIFICATIONS, PROVISION AND STANDARD DRAWINGS

SECTION 805 - TRAFFIC SIGNALS
805.03 GENERAL REQUIREMENTS
805.04 POLE INSTALLATION
805.05 PLACING SIGNAL HEADS
805.13 FOUNDATIONS
805.15 METHOD OF MEASUREMENT
805.16 BASIS OF PAYMENT

SECTION 805, BEGIN LINE 458, INSERT AS FOLLOWS:

805.15 Method of Measurement

Traffic signal head, pedestrian signal head, pedestrian push button, controller cabinet foundation, M foundation modified to P-1 foundation signal steel strain pole, signal wood pole, signal cantilever structure*, signal cantilever structure combination arm, signal cantilever structure pole section 2, signal cantilever structure foundations*, signal support foundation, signal service, disconnect hanger, magnetometer detector, microloop detector, loop detector delay amplifier, *loop detector delay counting amplifier, loop detector rack, auxiliary BIU panel,* signal handhole, signal detector housing, span catenary and tether, and span catenary for flasher will be measured by the number of units installed.

SECTION 805, BEGIN LINE 493, INSERT AS FOLLOWS:

If specified as pay items, traffic signal controller and cabinet, traffic signal head, pedestrian signal head, pedestrian push button, controller cabinet foundation, M foundation modified to P-1 foundation, signal steel strain pole, signal wood pole, signal cantilever structure*, signal cantilever structure combination arm, signal cantilever structure pole section 2, signal cantilever structure foundations*, signal support foundation, signal pedestals, signal service, disconnect hanger, magnetometer detector, microloop detector, loop detector delay amplifier, *loop detector delay counting amplifier, loop detector rack, auxiliary BIU panel,* signal handhole, signal detector housing, span catenary and tether, and span catenary for flasher will be paid for at the contract unit price per each. Conduit of the type specified, signal cable, interconnect cable, electrical signal cable, loop lead-in cable, and saw cut for roadway loop detector and sealant will be paid for at the contract unit price per linear foot (meter).

SECTION 805, AFTER LINE 540, DELETE AND INSERT AS FOLLOWS:

~~Signal Cantilever Structure, Mast Arm _____ ft (m)..... EACH~~
~~length~~

Signal Cantilever Structure, _____ ft (m) Signal Arm____..... EACH
length length

Signal Cantilever Structure, Combination Arm _____ ft (m) ..... EACH
length

Signal Cantilever Structure, Drilled Shaft Foundation, ____ ..... EACH
type

Signal Cantilever Structure, Pole Section 2 (17 in. diameter pole)..... EACH

Signal Cantilever Structure, Pole Section 2 (24 in. diameter pole)..... EACH

Signal Cantilever Structure, Spread Footing Foundation, ____..... EACH
type

APPROVED MINUTES

REVISION TO STANDARD SPECIFICATIONS, PROVISION AND STANDARD DRAWINGS

RSP 922-T-168 TRAFFIC SIGNALS MATERIALS AND EQUIPMENT

(Only affected sections of the 922-T-168 TRAFFIC SIGNALS MATERIALS AND EQUIPMENT are shown. Proposed changes shown: deletion – strikethrough; addition - underlined.

922-T-168, BEGIN LINE 1075, DELETE AND INSERT AS FOLLOWS:

922.08 Mid-~~Mast~~Signal Cantilever Arm Mount Signal Bracket

The bracket shall permit the following 4 adjustments:

(a) rotational adjustment about bracket axis;

(b) vertical adjustment;

(c) rotational adjustment about ~~mast~~ arm; and

(d) rotational adjustment right and left from vertical plane

922-T-168, BEGIN LINE 1095, DELETE AND INSERT AS FOLLOWS:

All electrical wiring shall be concealed within the bracket, except that which runs from the bracket to the ~~mast~~ signal cantilever arm.

922-T-168, BEGIN LINE 1272, DELETE AND INSERT AS FOLLOWS:

(c) Signal Cantilever Structures

1. General

A signal cantilever structure shall be designed in accordance with AASHTO Standard Specifications for Structural Supports for Highway Signs, Luminaires, and Traffic Signals, except where modified herein.

For special designs, ~~W~~where the manufacturer has wind tunnel test data, they may use drag coefficients based on actual tests. Otherwise, the manufacturer shall use the drag coefficients ~~in Table 1.2.5c~~ as indicated below.

2. Signal Support

The cantilever traffic signal pole and ~~mast~~ arms shall be ~~designed~~ in accordance with the standard drawings. Structure requiring special designs shall ~~to support the loads in accordance with the plans in a 80 mph (129 km/h) wind with gusts to 104 mph (167 km/h). Loading shall assume die-cast aluminum heads~~ utilize the following design conditions unless otherwise noted.

a. 90 mph (145 km/h) wind

b. 50 years service life

c. Category II fatigue except as noted below

d. Category I fatigue for 55 ft and 60 ft arms when the 1 direction ADT exceeds 10,000 vpd and the speed limit exceeds 35 mph (56 km/h)

APPROVED MINUTES

e. Galloping included

f. Truck gusts included with 60 mph (97 km/h) truck speed

g. Back plates included on signals

h. Cd for structure members equals to 1.1 for fatigue and in accordance with AASHTO Standard Specifications for Structural Supports for Highway Signs, Luminaries, and Traffic Signals for working loads, Table 3-6.

A special design shall be required for arms exceeding the number of signal heads, number of signs or sign area shown on the loading diagrams on the standard drawings. Three signal heads may be placed where 5 signal heads are shown. If a special design is required for the arm, a special design shall be provided for the arm connection, pole, and foundation.

The traffic signal pole and ~~mast~~ cantilever arm shall be designed to provide a 17.5 ft (5.33 m) minimum clearance at all signals. Clearance shall be the vertical distance from the lowest point of the signal ~~combination~~ heads to a horizontal plane ~~3 in. (75 mm) below the base of the mast arm pole or from the lowest point of the signal combination~~ to the pavement surface below the signal ~~combination, whichever governs~~heads. ~~Adjustment of the clearance at the installation site shall be by raising or lowering the mast arm along the upper length of the pole. After the pole is anchored to the foundation, the pole design shall permit the mast arm to be rotated 90° in either direction and secured~~. The cable inlet shall not be obstructed when ~~a field rotation or~~ vertical adjustment of the ~~mast~~cantilever arm is made.

There shall be no threads in the wearing surface plane at the point of connection between the clevis clamp and the signal face assembly. The clevis clamp shall have a 11/16 in. (18 mm) diameter bolt hole to receive the signal face assembly.

~~3. Combination Signal-Luminaire Support~~

~~All requirements for a signal support shall apply to a combination signal-luminaire support.~~

~~The minimum design load of the luminaire shall be 53 lbs (24 kg) with a projected surface area subject to wind loading of 2.4 sq ft (0.223 m^2). If heavier or larger luminaires are used, their actual values shall be used. The required luminaire mounting height shall be in accordance with the plans. Mounting height shall be defined as the vertical distance from the lowest point of the luminaire to the horizontal plane passes through the base of the pole.~~

~~The maximum percentage of allowable stress shall be 80% of the AASHTO Standard Specifications for Group I loads. Vibration dampers shall be furnished as recommended by the manufacturer.~~

~~4~~ 3. Pole Requirements

APPROVED MINUTES

a. General

The pole shall be a round or multi-sided tapered tube, except the upper 4 to 6 ft (1.2 to 1.8 m) ~~of a signal support pole~~ may be non-tapered. The pole taper rate shall be 0.14 in/ft. The signal ~~support~~ cantilever pole shall have a reinforced handhole ~~4~~ 6 in. (~~100~~ 152 mm) by ~~6~~ 10 in. (~~150~~ 254 mm) minimum complete with cover and latching device located 18 in. (460 mm) above the base. A 1/2 in. (13 mm) 13 NC threaded grounding nut or approved equivalent shall be provided and be accessible through the handhole. A reinforced handhole 4 in. by 6 in. (102 mm by 152 mm) minimum complete with cover and latching device shall be located near arm connections at locations as indicated in the standard drawings. All poles shall be supplied with a pole splice plate as indicated in the standard drawings. A top cover shall be supplied for installations not utilizing a pole top luminaire. ~~The pole cap shall be secured in place with set screws. The combination signal-luminaire pole shall have a reinforced handhole 4 in. (100 mm) by 8 in. (200 mm) minimum complete with cover and latching device, located 18 in. (460 mm) above the base. The combination signal-luminaire pole shall be provided with a removable pole cap and~~ All poles shall be furnished with an integral wire support hook for the luminaire electrical cable. The cable shall be attached to the hook by a service drop clamp. ~~A wiring hole with a 1 in. (25 mm) to 1 1/2 in. (38 mm) inside diameter grommet shall be provided where the luminaire mast arm attaches to the pole.~~

b. Deflection

For special designs, ~~T~~the maximum allowable horizontal deflection of the pole shall be limited to 2.5 % of the structure height under Group I load combinations in accordance with 10.4.2 of the AASHTO Standard Specifications for Structural Supports for Highway Signs, Luminaries, and Traffic Signals ~~under maximum loading conditions shall not exceed a deflection angle of 1° 10" from the vertical axis of the pole for any 1 ft (305 mm) section of the pole along the entire length of the pole~~.

c. Materials

The signal cantilever pole ~~and the combination signal-luminaire pole~~ shall be steel ~~or aluminum~~. Steel poles, base plates, pole splice plates and arm connection plates shall be in accordance with ASTM A 595 or A 572 with a minimum yield strength of 50,000 ~~lbs~~ psi (345 ~~k~~MPa) and shall be galvanized in accordance with ASTM A 123. ~~Aluminum poles shall be in accordance with ASTM B 221 (B 221M) alloy 6063-T6 or 6005-T5, or ASTM B 241 (B 241M), alloy 6063-T6.~~

d. Hardware

All hardware for steel poles except bolts, base plates, pole splice plates, arm, arm connection plates, ~~for the mast arm clamps~~ and anchor bolts shall be in accordance with ASTM A 307 and shall be galvanized in accordance with ASTM A 153 or be mechanically galvanized and conform to coating thickness, adherence, and quality requirements of ASTM A 153, class C. A cast pole cap shall be in accordance with ASTM A 126 and shall be galvanized with a minimum coating of 2 oz/sq ft (0.610 kg/m^2). Bolts for the pole splice shall be in accordance with ASTM A 490 and shall be galvanized. The contact area for both pole splice plates to be Class B per AASHTO 10.32.3c with a minimum slip coefficient of 0.5. The surfaces shall be blast-cleaned and have Class B coatings.

APPROVED MINUTES

~~*All hardware for aluminum poles shall be stainless steel in accordance with ASTM A 276, type 304 or type 305.*~~

e. Anchor Base

A 1 piece anchor base shall be supplied as indicated in the standard drawings ~~secured to the lower end of the pole and shall develop the full strength of the pole. The base shall be provided with 4 holes of adequate size to accommodate 1 1/4 in. (32 mm) anchor bolts equally spaced on a bolt circle of 15 in. (380 mm) diameter and shall have 4 tapped holes for attaching the bolt covers.~~ Four removable bolt covers shall be provided with each base and each cover shall attach to the upright portion of the body of the base by means of 1 hex head cap screw. ~~The steel for the anchor base shall be in accordance with ASTM A 36 (A 36M), A 572 (A 572M), or A 588 (A 588M). Aluminum for the anchor base shall be in accordance with ASTM B 26, alloy 356.0-T6 or 356.0-T7 or ASTM B-209, alloy 6061-T6.~~

f. Arm Requirements

(1) Signal and Combination Cantilever Arms

The arms shall be a circular or multi-sided tapered tube. The arm taper rate shall be 0.14 in./ft. A signal or combination cantilever arm shall be rigidly attached to the pole as detailed in the standard drawings ~~A signal cantilever arm shall be attached to the pole by circular clamps. One-half of the clamp shall be welded to the cantilever arm.~~ The ~~single member~~ cantilever arm ~~or the upper tapered member of the truss style arm~~ shall have a cable inlets as indicated in the standard drawings ~~adjacent to the clamp complete with grommet~~. The cable inlet shall be a 1 3/4 in. (44 mm) diameter hole with a 1 1/2 in. (38 mm) inside diameter rubber grommet. ~~The 20, 25, and 30 ft (6.1, 7.6 and 9.2 m) cantilever arms shall have 1 intermediate cable inlet with grommet located 12 ft (3.7 m) from the free end of the arm. The 35 and 40 ft (10.7 and 12.2 m) cantilever arm shall have 2 intermediate cable inlets with grommets located 12 ft (3.6 m) and 24 ft (7.3 m) respectively from the free end of the arm. The intermediate cable inlet shall be 1 in. (25 mm) diameter hole with 3/4 in. (19 mm) inside diameter rubber grommet.~~

~~*The maximum rise of the single member arm shall be 1/2 in. (13 mm) per 1 ft (305 mm) of arm after loading. The maximum rise of the truss style arm shall be as set out in the table. The rise shall be measured vertically from the centerline of the free end of the truss to a plane through the centerline of the upper arm bracket after loading.*~~

~~*Mast Arm Length ft (m)*~~	~~*Total Rise ft – in. (m)*~~	~~*Tolerance in. (mm)*~~
~~*12 – 20 (3.7 – 6.1)*~~	~~*4 – 0 (1.2)*~~	~~*± 1 (± 25)*~~
~~*25 (7.6)*~~	~~*4 – 3 (1.3)*~~	~~*± 1 (± 25)*~~
~~*30 – 40 (9.2 – 12.2)*~~	~~*4 – 7 (1.4)*~~	~~*± 1 (± 25)*~~

~~*The end signals on the truss style arms shall be suspended and the intermediate signals shall be rigidly attached.*~~ *All signal~~s~~ heads on the cantilever ~~single member~~ arms shall be rigidly attached as shown on the standard drawings and installed parallel to the horizontal plane and*

APPROVED MINUTES

centered as much as possible to the cantilever arm ~~plans~~. The cantilever arms shall be used as an enclosed raceway for wiring and shall be free of burrs and rough edges.

~~Both parts of the clamp for the single member arms shall be stamped with the arm length prior to galvanizing.~~

~~(2) Luminaire Mast Arm for Combination Support~~

~~The luminaire mast arm shall be in accordance with 922.01(a)1.~~

~~(3)~~(2) Materials

The signal ~~cantilever~~ and combination arm shall be of the same material as the pole. ~~The luminaire mast arm shall be of the same material as the pole except that a truss type arm shall be in accordance with 922.01(a)~~. Bolts for the ~~mast~~ cantilever arm ~~clamp~~ connections shall be ~~stainless steel in accordance with ASTM A 276, type 304 or 305~~ ASTM A325 and shall be galvanized.

g. Anchor Bolts

Four steel anchor bolts, each fitted with 2 hex nuts and 2 flat washers, shall be furnished with each pole. The anchor bolt shall be ~~1 1/4 in. (32 mm) in diameter~~ as indicated in the standard drawings with a minimum of ~~10~~ 15 in. (~~254~~ 380 mm) of 7 NC threads on the upper end. The threads, nuts, and washers shall be galvanized in accordance with ASTM A 153 or be mechanically galvanized and conform to the coating thickness, adherence, and quality requirements of ASTM A 153, class C. ~~The anchor bolt shall be 48 in. (1220 mm) long with a 4 in. (100 mm) right angle bend on the lower end or a square steel washer, 6 in. by 6 in. by 1/2 in. (150 mm by 150 mm by 13 mm), with a hex nut welded onto the lower end~~. The steel for the bolt shall be in accordance with ASTM A 576, or ASTM A 675 (~~ASTM~~ A 675M), with a minimum yield strength of 55,000 psi (~~379~~380 ~~k~~MPa), or ASTM A 36 (~~ASTM~~ A 36M), special quality, modified to 55,000 psi (~~379~~380 ~~k~~MPa) or approved equal.

h. Finish

All steel material shall be fully galvanized. Galvanizing shall take place after all welding is accomplished. ~~Aluminum poles shall be provided with a satin finish accomplished by mechanical rotary grinding and aluminum mast arms shall be provided with a satin etched finish.~~

i. Certification

Unless otherwise specified, all materials covered herein shall be covered by a type C certification in accordance with 916.

j. Working Drawings

Working drawings and design calculations shall be submitted to the Highway Design and Tech Support, Division of Production Management, central office for approval in accordance with 105.02. The approved drawings will be distributed by the Highway Design and Tech Support, Division of Production Management, central office.

APPROVED MINUTES

REVISION TO STANDARD SPECIFICATIONS, PROVISION AND STANDARD DRAWINGS

805-TSCS-01 TRAFFIC SIGNAL CANTILEVER STRUCTURE SIGNAL ARM DIMENSIONS & DETAILS

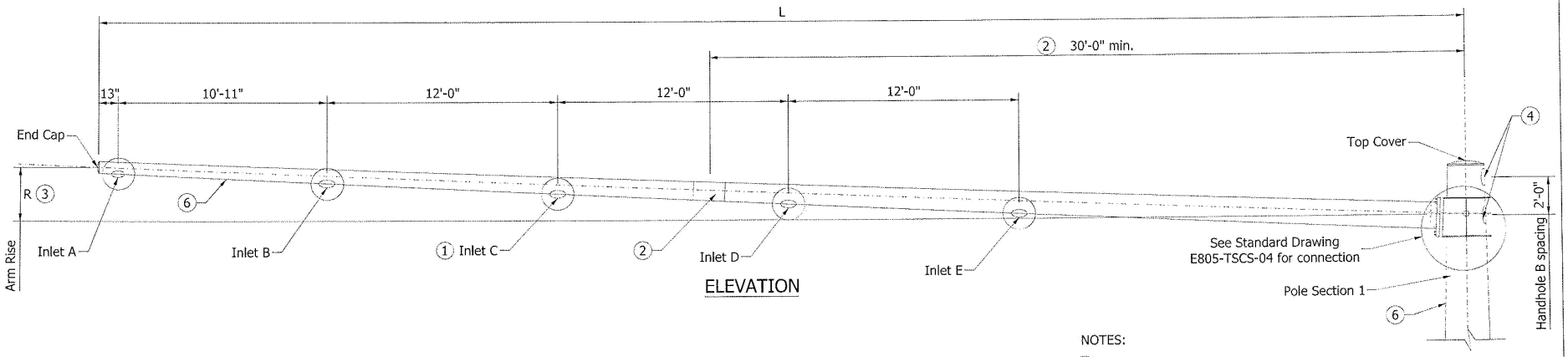

ELEVATION

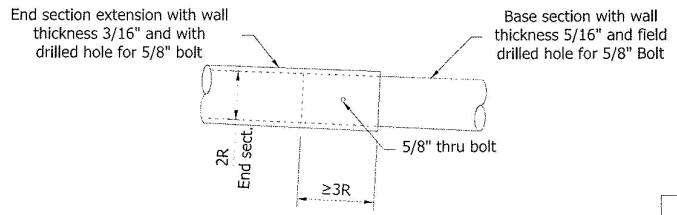

(2) OPTIONAL ARM SPLICE DETAIL

(6) TYPICAL SEAM WELD

NOTES:

(1) Number of cable inlets depends on arm L (See Table on this sheet). The inlet diameter shall be 1" with rubber grommet (Typ.)

(2) Optional splice can be used for greater than 40' arm lengths. The splice shall be located a minimum of 30' from the pole. The end extension section of the arm shall have a wall thickness of 3/16" or greater. Field assembly to achieve a snug tight joint (Min. overlap not less than 1.5 times the inside dimension of the end section).

(3) Arm rise R is measured in deflected position after signal heads are in place.

(4) See Standard Drawing No. E805-TSCS-05 for Handhole B details.

5. See Standard Drawing No. E805-TSCS-06 and 07 for placement of signal and signs for each arm length.

(6) If seam welds are used, the weld location for the arms shall be along the bottom, and on the side of pole as shown.

CANTILEVER SIGNAL ARM DATA

L (ft.)	ARM DIAMETER AT POLE	ARM WALL THICKNESS (in.)	R (in.)	CABLE INLETS
15	8"	5/16"	7 1/2"	A, B
20	10"	5/16	10"	A, B
25	11"	5/16"	1'-0 1/2"	A, B
30	13"	5/16"	1'-3"	A, B
35	14"	5/16"	1'-5 1/2"	A, B, C
40	15"	5/16"	1'-8"	A, B, C
45	17"	5/16"	1'-10 1/2"	A, B, C
50	19"	5/16"	2'-1"	A, B, C, D
55	20"	5/16"	2'-3 1/2"	A, B, C, D
60	21"	5/16"	2'-6"	A, B, C, D, E

INDIANA DEPARTMENT OF TRANSPORTATION

TRAFFIC SIGNAL CANTILEVER STRUCTURE
SIGNAL ARM DIMENSIONS & DETAILS

AUGUST 2010

STANDARD DRAWING NO. E 805-TSCS-01

/s/ XXXXXXXXX 08/01/10
DESIGN STANDARDS ENGINEER DATE

/s/ XXXXXXXXX 08/01/10
CHIEF HIGHWAY ENGINEER DATE

DESIGN STANDARDS ENGINEER

REVISION TO STANDARD SPECIFICATIONS, PROVISIONS AND STANDARD DRAWINGS

805-TSCS-02 TRAFFIC SIGNAL CANTILEVER STRUCTURE POLE DIMENSIONS AND DETAILS ELEVATION

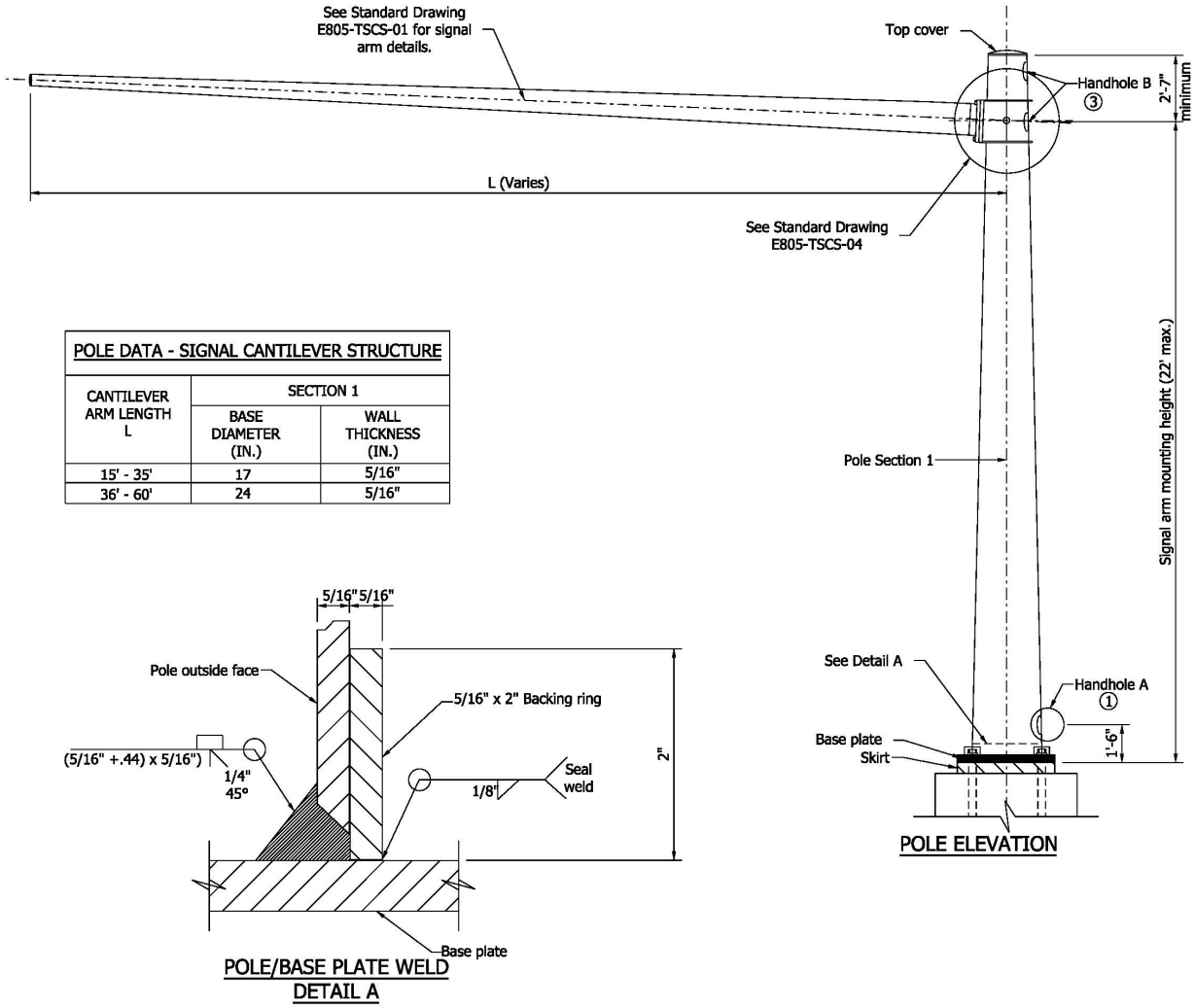

NOTES:

① See Standard Drawing No. E805-TSCS-05 for Handhole A details.

2. See Standard Drawing No. E805-SGGR-01 to -03 for grounding details

③ See Standard Drawing No. E805-TSCS-05 for Handhole B details.

POLE DATA - SIGNAL CANTILEVER STRUCTURE

CANTILEVER ARM LENGTH L	SECTION 1	
	BASE DIAMETER (IN.)	WALL THICKNESS (IN.)
15' - 35'	17	5/16"
36' - 60'	24	5/16"

INDIANA DEPARTMENT OF TRANSPORTATION

TRAFFIC SIGNAL CANTILEVER STRUCTURE
POLE DIMENSIONS AND DETAILS
ELEVATION

AUGUST 2010

STANDARD DRAWING NO. E 805-TSCS-02

/s/ XXXXXXXXX 08/01/10
DESIGN STANDARDS ENGINEER DATE

/s/ XXXXXXXXX 08/01/10
CHIEF HIGHWAY ENGINEER DATE

DESIGN STANDARDS ENGINEER

REVISION TO STANDARD SPECIFICATIONS, PROVISIONS AND STANDARD DRAWINGS

805-TSCS-03 TRAFFIC SIGNAL CANTILEVER STRUCTURE BASE PLATE, BOTTOM SPLICE PLATE DETAILS

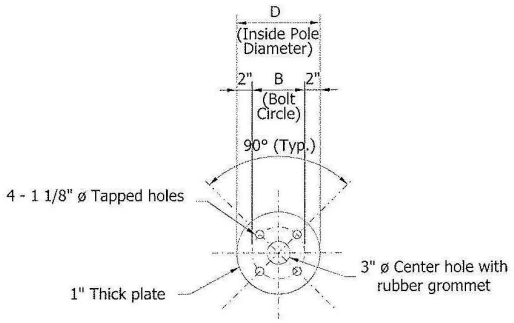

① BOTTOM SPLICE PLATE
(For 35' Cantilever Arm Lengths or Less)

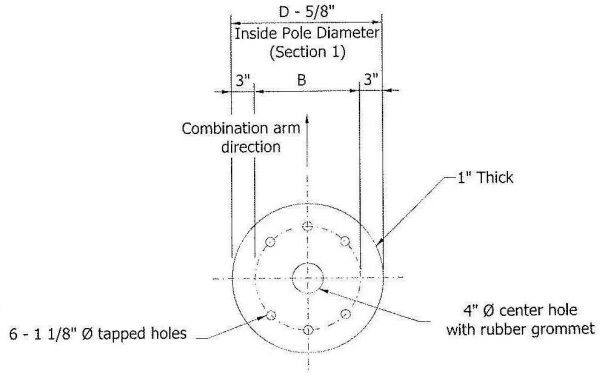

① BOTTOM SPLICE PLATE
(For Cantilever Arm Lengths Greater Than 35' to 60')

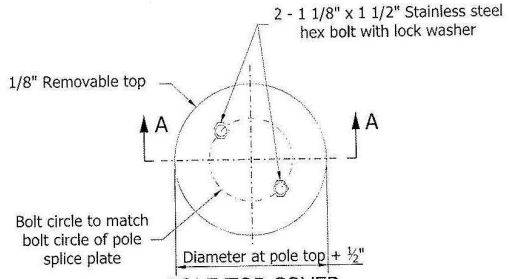

POLE TOP COVER

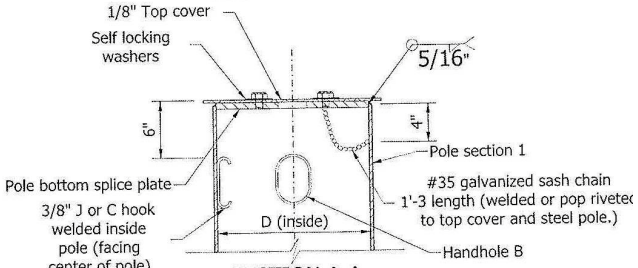

SECTION A-A

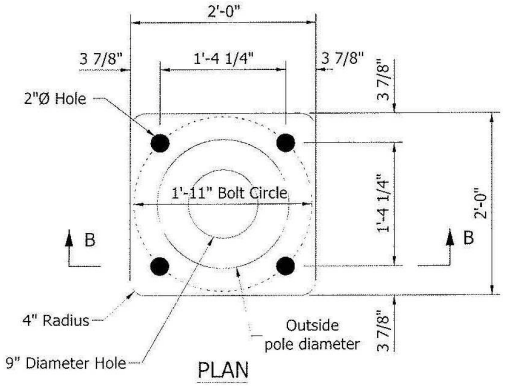

PLAN

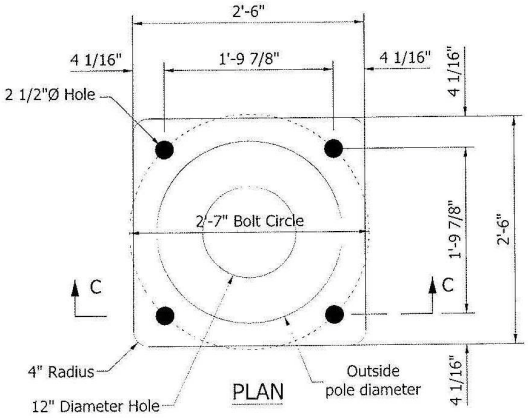

PLAN

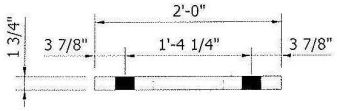

SECTION B-B

BASE PLATE A

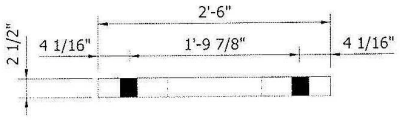

SECTION C-C

BASE PLATE B

NOTES:

① See Standard Drawings E 805-TSCS-11 and -12 for bottom splice plate orientation with combination arm.

2. Bolt circle shall allow clearance for the plate washer. Cutting or trimming the washer will not be allowed.

INDIANA DEPARTMENT OF TRANSPORTATION

TRAFFIC SIGNAL CANTILEVER STRUCTURE BASE PLATE , BOTTOM SPLICE PLATE DETAILS

AUGUST 2010

STANDARD DRAWING NO. E 805-TSCS-03

/s/ XXXXXXXXX 08/01/1(
DESIGN STANDARDS ENGINEER DATE

/s/ XXXXXXXXX 08/01/1(
CHIEF HIGHWAY ENGINEER DATE

DESIGN STANDARDS ENGINEER

REVISION TO STANDARD SPECIFICATIONS, PROVISIONS AND STANDARD DRAWINGS

805-TSCS-04 TRAFFIC SIGNAL CANTILEVER STRUCTURE SIGNAL ARM CONNECTION DETAILS

NOTES:

1. See Standard Drawing No. E805-TSCS-05 for Handhole B details.

2. The required signal arm rise will be built into the gusset plate as the angle "X". The angle "X" is described as the tangent R/L, where R is the arm rise and L is the arm length. Both R and L vary and are listed in the table on Standard Drawing No. E805-TSCS-01.

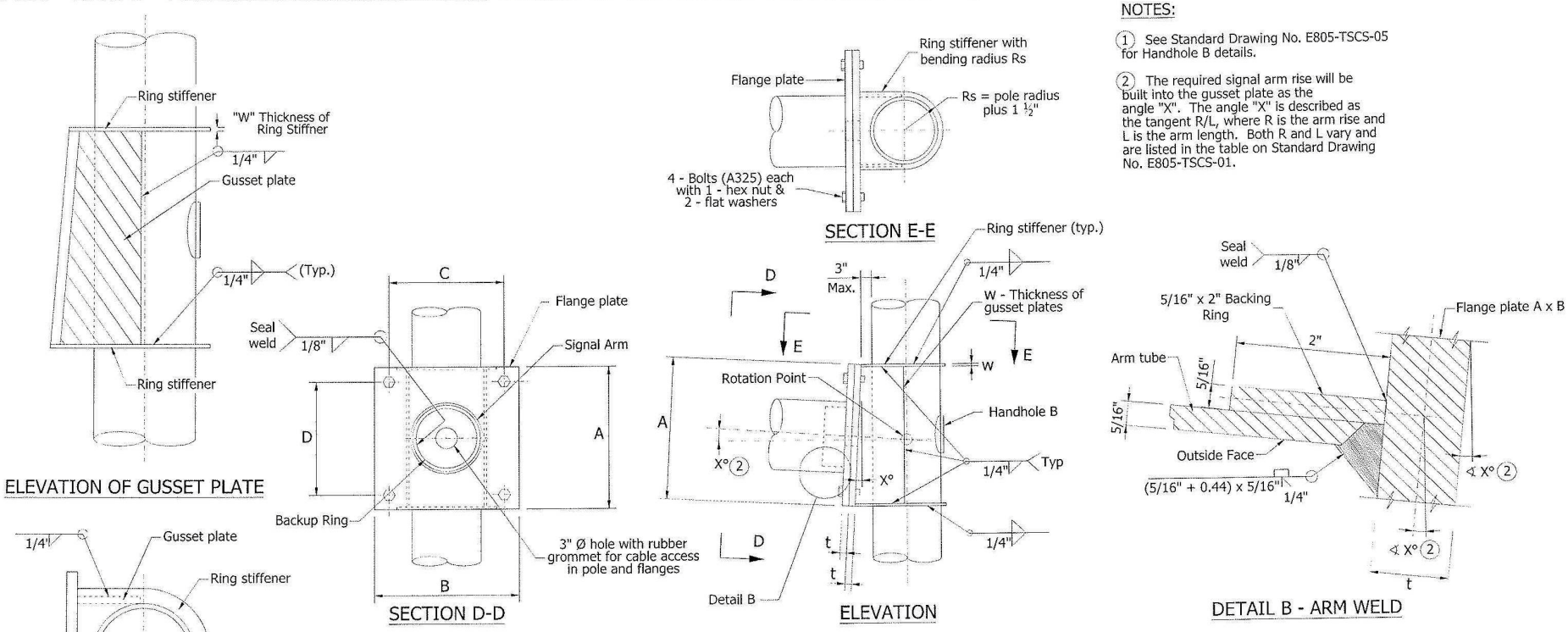

SIGNAL ARM CONNECTION DETAIL

TABLE OF PLATES AND BOLTS FOR SIGNAL CANTILEVER ARM

ARM LENGTH	FLANGE PLATE A x B	BOLT PATTERN C x D	RING STIFFNER GUSSET PLATE w	FLANGE PLATE THICKNESS t	BOLT
15' TO 35'	22" X 22"	17 1/2" X 17 1/2"	3/8"	1 1/2"	1 1/8" - 7UNC x 4 1/4" LONG
36' TO 60'	33" X 33"	27 1/2" X 27 1/2"	1/2"	1 3/4"	1 1/2" - 6UNC x 6 1/4" LONG

INDIANA DEPARTMENT OF TRANSPORTATION

TRAFFIC SIGNAL CANTILEVER STRUCTURE
SIGNAL ARM CONNECTION DETAILS

AUGUST 2010

STANDARD DRAWING NO. E 805-TSCS-04

/s/ XXXXXXXXX 08/01/10
DESIGN STANDARDS ENGINEER DATE

/s/ XXXXXXXXX 08/01/10
CHIEF HIGHWAY ENGINEER DATE

DESIGN STANDARDS ENGINEER

REVISION TO STANDARD SPECIFICATIONS, PROVISIONS AND STANDARD DRAWINGS

805-TSCS-05 TRAFFIC SIGNAL CANTILEVER STRUCTURE HANDHOLE DETAILS

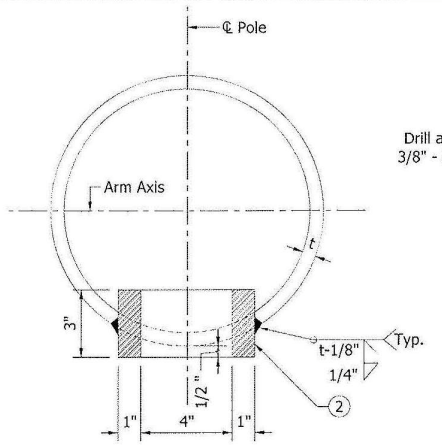

HANDHOLE B
SECTION ACROSS POLE

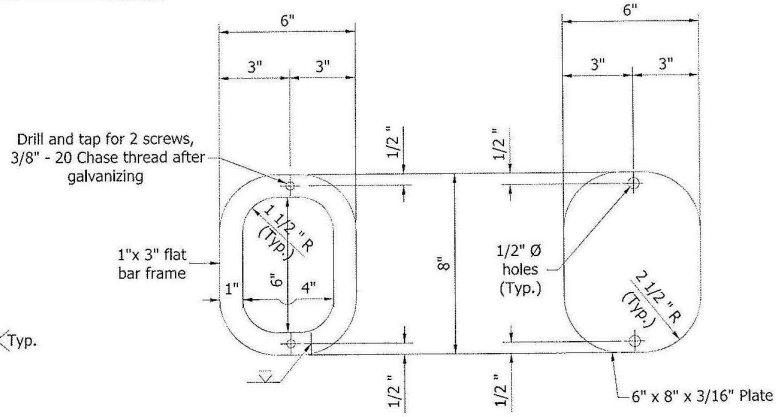

FRAME DETAIL COVER

HANDHOLE B

NOTES:

1. Handhole A to be used at the base of the pole. Handhole B to be used at all other locations.
2. In lieu of fabricated handhole frame as shown, frame may be cut from 3" plate (rolling direction vertical).
3. See Standard Drawing E 805-TSCS-02 for handhole locations.

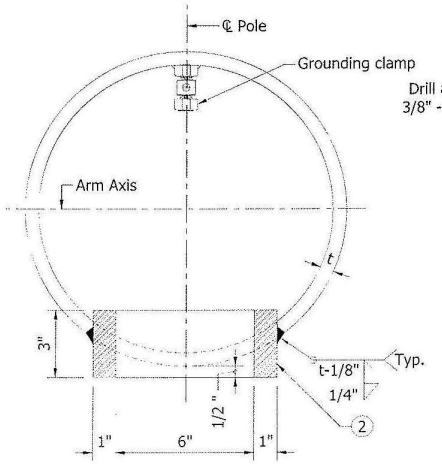

HANDHOLE A
SECTION ACROSS POLE

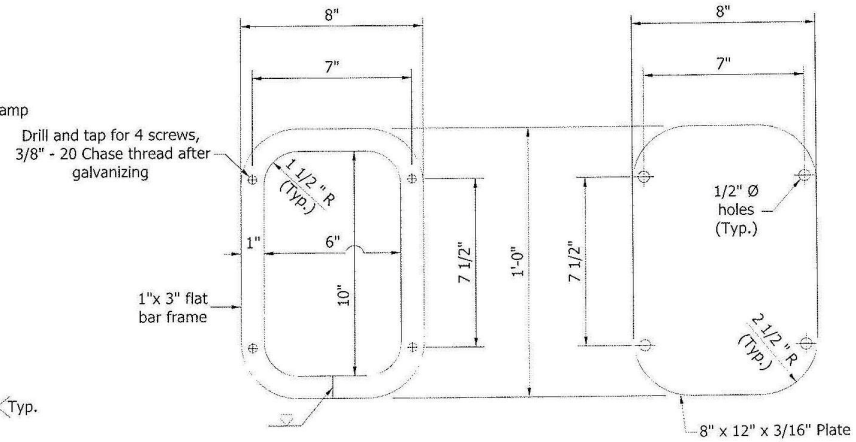

FRAME DETAIL COVER

HANDHOLE A

INDIANA DEPARTMENT OF TRANSPORTATION

TRAFFIC SIGNAL CANTILEVER STRUCTURE HANDHOLE DETAILS

AUGUST 2010

STANDARD DRAWING NO. E 805-TSCS-05

/s/ XXXXXXXXX 08/01/10
DESIGN STANDARDS ENGINEER DATE

/s/ XXXXXXXXX 08/01/10
CHIEF HIGHWAY ENGINEER DATE

DESIGN STANDARDS ENGINEER

REVISION TO STANDARD SPECIFICATIONS, PROVISIONS AND STANDARD DRAWINGS

805-TSCS-06 TRAFFIC SIGNAL CANTILEVER STRUCTURE PLACEMENT OF SIGNALS AND SIGNS LOADING FOR ARM 35' OR LESS

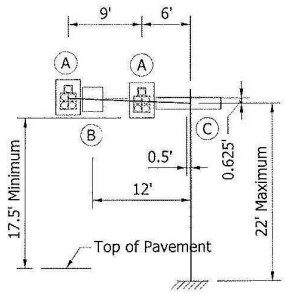

15' MAST ARM

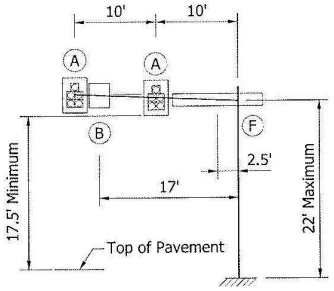

20' MAST ARM

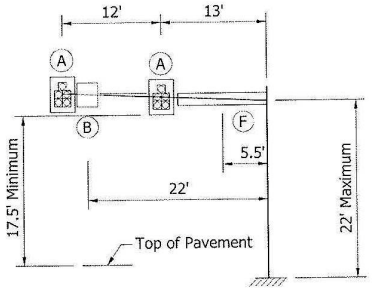

25' MAST ARM

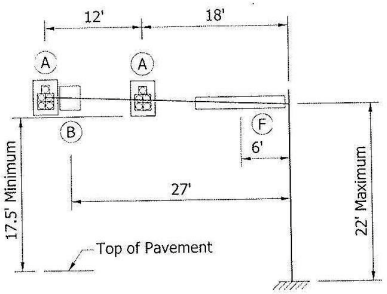

30' MAST ARM

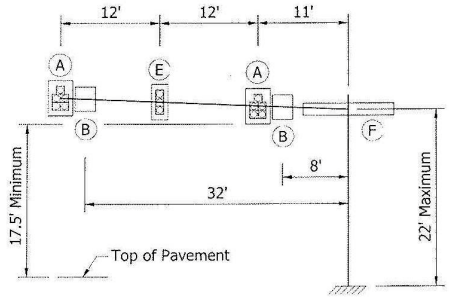

35' MAST ARM

LOADING INFORMATION

Device	Description	Device Area (Sft.)	Weight (Lbs.)
A	12" - 5 Sec. Signal With Backplates	13.1	55
B	36" x 30" Regulatory Sign	7.5	19
C	18" x 96" Street Name Sign	12.0	30
E	12" - 3 Sec. Signal With Backplates	8.7	35
F	18" x 132" Street Name Sign	16.5	41

NOTES:

The structure arms and pole are designed for the above loading conditions.
Foundations A and C are designed for the 35' mast arm loading condition.
Foundations B and D are designed for the 60' mast arm loading condition.

INDIANA DEPARTMENT OF TRANSPORTATION

TRAFFIC SIGNAL CANTILEVER STRUCTURE PLACEMENT OF SIGNALS AND SIGNS LOADING FOR ARMS 35' OR LESS

AUGUST 2010

STANDARD DRAWING NO. E 805-TSCS-06

/s/ XXXXXXXXX 08/01/10
DESIGN STANDARDS ENGINEER DATE

/s/ XXXXXXXXX 08/01/10
CHIEF HIGHWAY ENGINEER DATE

DESIGN STANDARDS ENGINEER

REVISION TO STANDARD SPECIFICATIONS, PROVISIONS AND STANDARD DRAWINGS

805-TSCS-07 TRAFFIC SIGNAL CANTILEVER STRUCTURE PLACEMENT OF SIGNALS AND SIGNS LOADING FOR ARMS > 35′ TO 60′

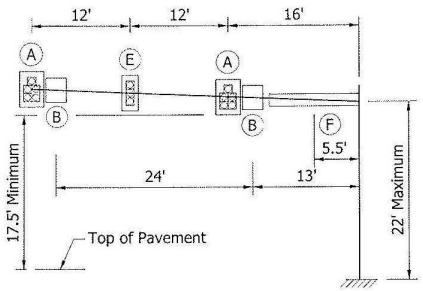

40' MAST ARM

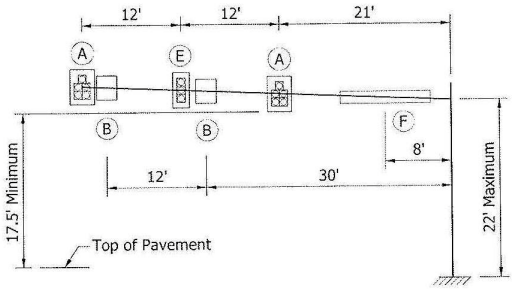

45' MAST ARM

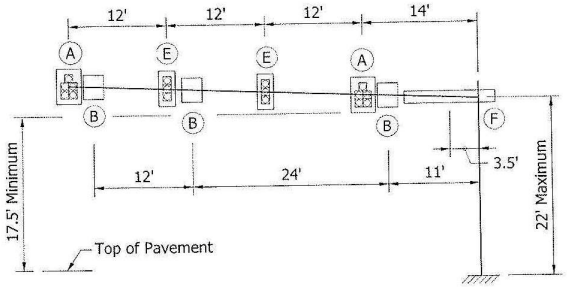

50' MAST ARM

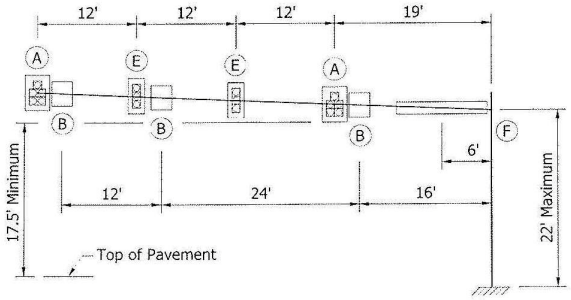

55' MAST ARM

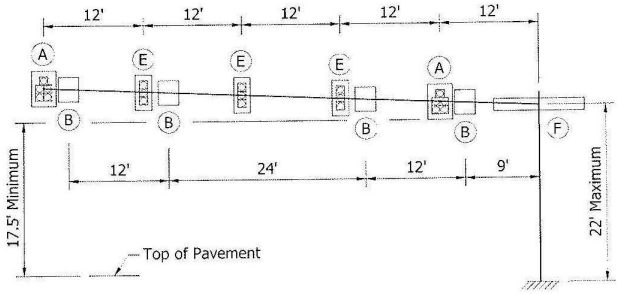

60' MAST ARM

NOTE:

See Standard Drawing No. E805-TSCS-06 for loading information table.

INDIANA DEPARTMENT OF TRANSPORTATION	
TRAFFIC SIGNAL CANTILEVER STRUCTURE PLACEMENT OF SIGNALS AND SIGNS LOADING FOR ARMS > 35' TO 60' AUGUST 2010	
STANDARD DRAWING NO. E 805-TSCS-07	
	/s/ XXXXXXXXX 08/01/10 DESIGN STANDARDS ENGINEER DATE
	/s/ XXXXXXXXX 08/01/10 CHIEF HIGHWAY ENGINEER DATE
DESIGN STANDARDS ENGINEER	

REVISION TO STANDARD SPECIFICATIONS, PROVISIONS AND STANDARD DRAWINGS

805-TSCS-08 TRAFFIC SIGNAL CANTILEVER STRUCTURE COMBINATION ARM DIMENSIONS & DETAILS

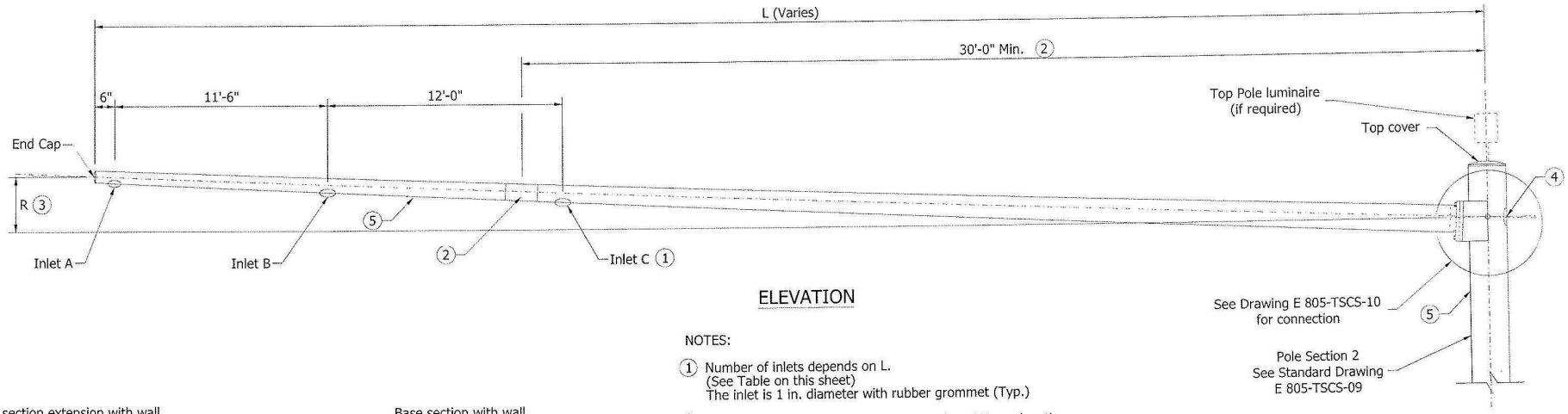

ELEVATION

NOTES:

1. Number of inlets depends on L. (See Table on this sheet) The inlet is 1 in. diameter with rubber grommet (Typ.)
2. Optional splice can be used for greater than 40' arm lengths. The splice shall be located a minimum of 30' from the pole. The end extension section of the arm shall have a wall thickness of 1/8" or greater. Field assembly to achieve a snug tight joint (Min. overlap not less than 1.5 times the inside dimension of the end section).
3. Measured in deflected position after cameras are in place.
4. See Standard Drawing No. E805-TSCS-05 for Handhole B details.
5. If seam welds are used, the wld location for the arms shall be along the bottom, and on the side of the pole as shown.

VERTICAL CLEARANCE CRITERIA

Maintain 40'-0" minimum clearances from top of pavement to the camera lens.

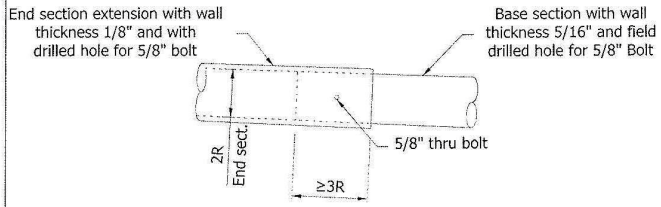

2 OPTIONAL ARM SPLICE DETAIL

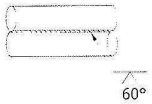

5 TYPICAL SEAM WELD

COMBINATION ARM DATA

L (Ft.)	ARM DIAMETER AT POLE	ARM THICKNESS	R 3	CABLE INLETS 1
15'	5.5"	1/8"	7 1/2"	A
20'	5.5"	1/8"	10"	A
25'	7.0"	1/8"	1'-0 1/2"	A
30'	8.0"	1/8"	1'-3"	A, B
35'	8.0"	1/8"	1'-5 1/2"	A, B
40'	9.0"	1/8"	1'-8"	A, B, C
45'	10.0"	1/8"	1'-10 1/2"	A, B, C
50'	11.0"	1/8	2'-1"	A, B, C
55'	11.0"	1/8"	2'-3 1/2"	A, B, C
60'	12.0"	1/8"	2'-6"	A, B, C

INDIANA DEPARTMENT OF TRANSPORTATION

TRAFFIC SIGNAL CANTILEVER STRUCTURE COMBINATION ARM DIMENSIONS & DETAILS

AUGUST 2010

STANDARD DRAWING NO. E 805-TSCS-08

/s/ XXXXXXXXX 08/01/10
DESIGN STANDARDS ENGINEER DATE

/s/ XXXXXXXXX 08/01/10
CHIEF HIGHWAY ENGINEER DATE

DESIGN STANDARDS ENGINEER

REVISION TO STANDARD SPECIFICATIONS, PROVISION AND STANDARD DRAWINGS

805-TSCS-09 TRAFFIC SIGNAL CANTILEVER STRUCTURE COMBINATION POLE DIMENSIONS AND DETAILS ELEVATION

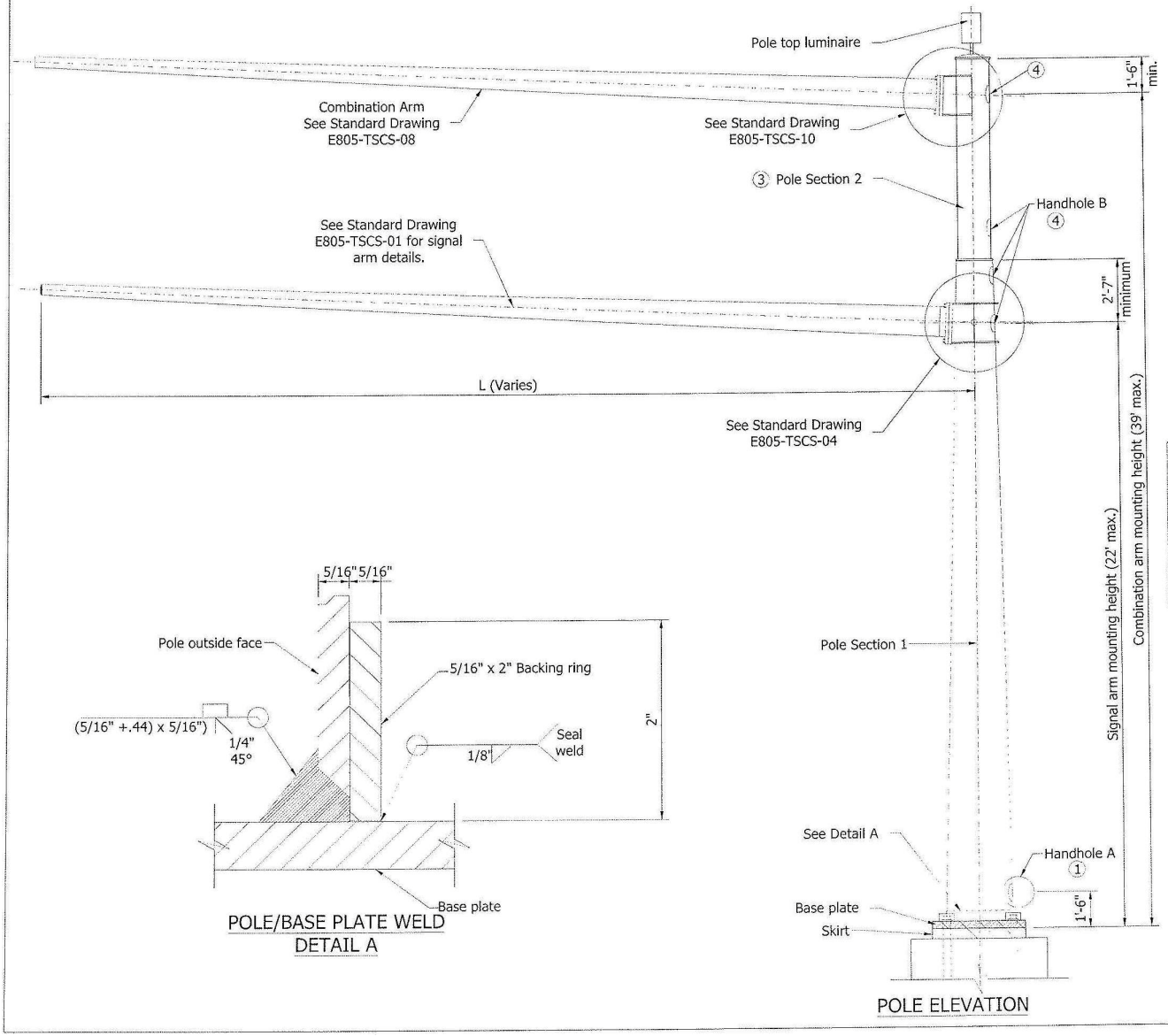

NOTES:

① See Standard Drawing No. E805-TSCS-05 for Handhole A details.

② See Standard Drawing No. E805-SGGR-01 to -03 for grounding details.

③ Base diameter of Pole Section 2 equal to top diameter of Pole Section 1.

④ See Standard Drawing No. E805-TSCS-05 for Handhole B details.

POLE DATA - SIGNAL CANTILEVER STRUCTURE

CANTILEVER ARM LENGTH L	SECTION 1		SECTION 2 COMBINATION	
	BASE DIAMETER (IN.)	WALL THICKNESS (IN.)	BASE DIAMETER (IN.)	WALL THICKNESS (IN.)
15' - 35'	17	5/16"	③	1/8"
36' - 60'	24	5/16"	③	1/8"

INDIANA DEPARTMENT OF TRANSPORTATION

TRAFFIC SIGNAL CANTILEVER STRUCTURE COMBINATION POLE DIMENSIONS AND DETAILS ELEVATION

AUGUST 2010

STANDARD DRAWING NO. E 805-TSCS-09

/s/ XXXXXXXXX 08/01/10
DESIGN STANDARDS ENGINEER DATE

/s/ XXXXXXXXX 08/01/10
CHIEF HIGHWAY ENGINEER DATE

DESIGN STANDARDS ENGINEER

REVISION TO STANDARD SPECIFICATIONS, PROVISION AND STANDARD DRAWINGS

805-TSCS-10 TRAFFIC SIGNAL CANTILEVER STRUCTURE COMBINATION ARM CONNECTION DETAILS

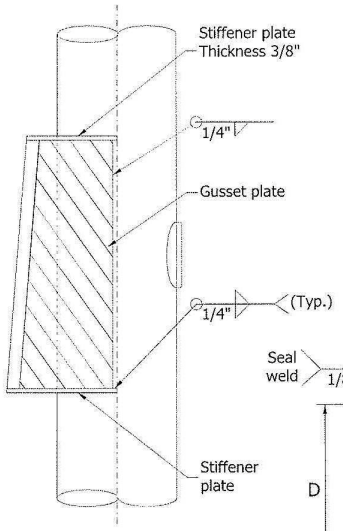

ELEVATION OF GUSSET PLATES

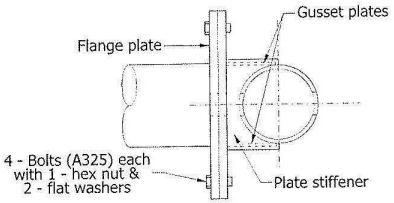

SECTION G-G

NOTES:

1. See Standard Drawing E805-TSCS-05 for Handhole details.
2. The required combination arm rise will be built into the gusset plate as the angle "X". The angle "X" is described as the tangent R/L, where R is the combination arm rise and L is the arm length. Both R and L vary and are listed in the table on Standard Drawing E805-TSCS-01.

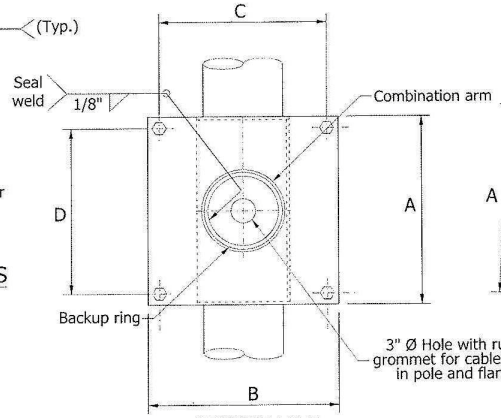

SECTION F-F

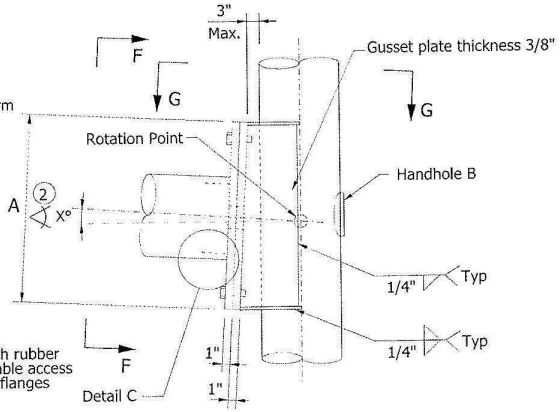

ELEVATION

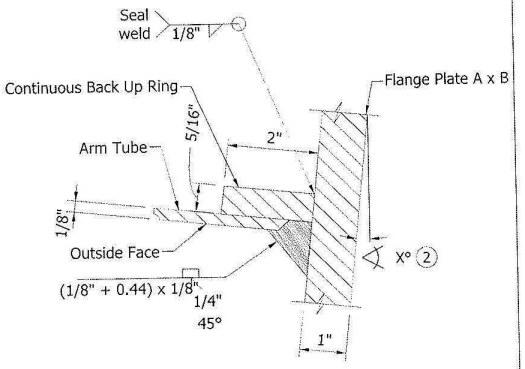

DETAIL C - ARM WELD

COMBINATION ARM CONNECTION DETAIL

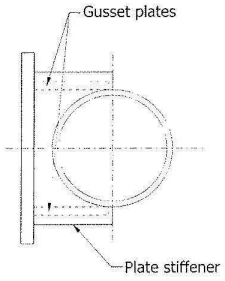

TOP OF GUSSET PLATES

TABLE OF PLATES AND BOLTS FOR COMBINATION ARM				
ARM LENGTH	FLANGE PLATE A x B	BOLT PATTERN C x D	FLANGE PLATE THICKNESS	BOLT
15' TO 35'	20" x 20"	17" x 17"	1"	7/8" - 9UNC x 3.5" LONG
36' TO 60'	25" x 25"	22" x 22"	1"	7/8" - 9UNC x 3.5" LONG

INDIANA DEPARTMENT OF TRANSPORTATION

TRAFFIC SIGNAL CANTILEVER STRUCTURE COMBINATION ARM CONNECTION DETAILS

AUGUST 2010

STANDARD DRAWING NO. E 805-TSCS-10

/s/ XXXXXXXXX 08/01/10
DESIGN STANDARDS ENGINEER DATE

/s/ XXXXXXXXX 08/01/10
CHIEF HIGHWAY ENGINEER DATE

DESIGN STANDARDS ENGINEER

REVISION TO STANDARD SPECIFICATIONS, PROVISION AND STANDARD DRAWINGS

805-TSCS-11 TRAFFIC SIGNAL CANTILEVER STRUCTURE COMBINATION POLE SPLICE DETAILS FOR ARMS 35′ OR LESS

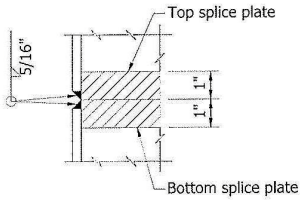

WELD DETAIL D

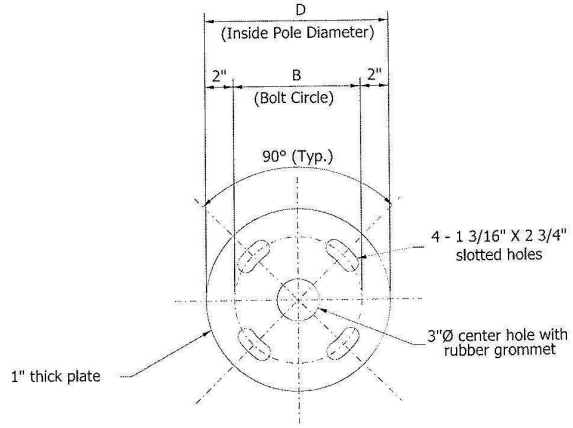

TOP SPLICE PLATE

NOTES:

1. Diameter at the bottom of Pole section 2 to match with the diameter at the top of Pole section 1.

(2) See Standard Drawing E805-TSCS-03 for bottom splice plate details.

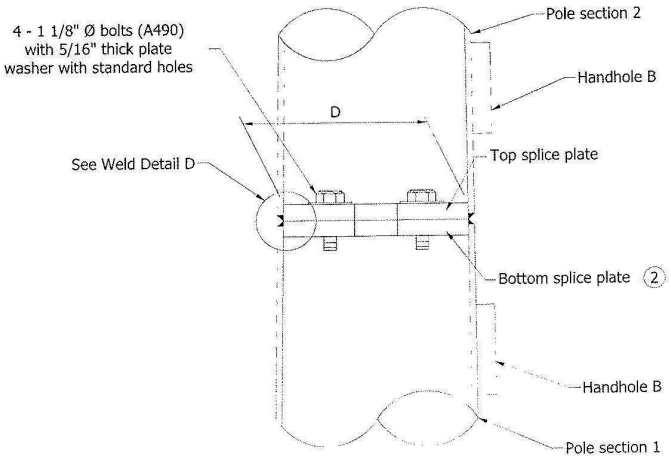

ELEVATION

INDIANA DEPARTMENT OF TRANSPORTATION	
TRAFFIC SIGNAL CANTILEVER STRUCTURE COMBINATION POLE SPLICE DETAILS FOR ARMS 35' OR LESS AUGUST 2010	
STANDARD DRAWING NO. E 805-TSCS-11	
	/s/ XXXXXXXXX 08/01/10 DESIGN STANDARDS ENGINEER DATE
	/s/ XXXXXXXXX 08/01/10 CHIEF HIGHWAY ENGINEER DATE
DESIGN STANDARDS ENGINEER	

REVISION TO STANDARD SPECIFICATIONS, PROVISION AND STANDARD DRAWINGS

805-TSCS-12 TRAFFIC SIGNAL CANTILEVER STRUCTURE COMBINATION POLE SPLICE DETAILS FOR ARMS > 35' TO 60'

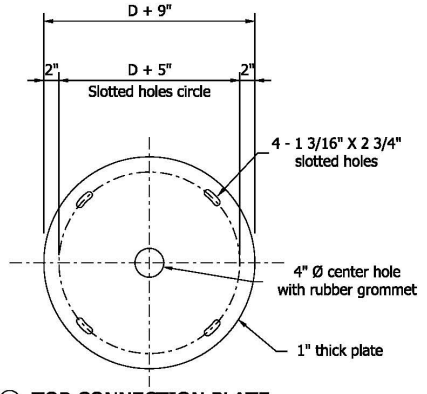

③ TOP CONNECTION PLATE

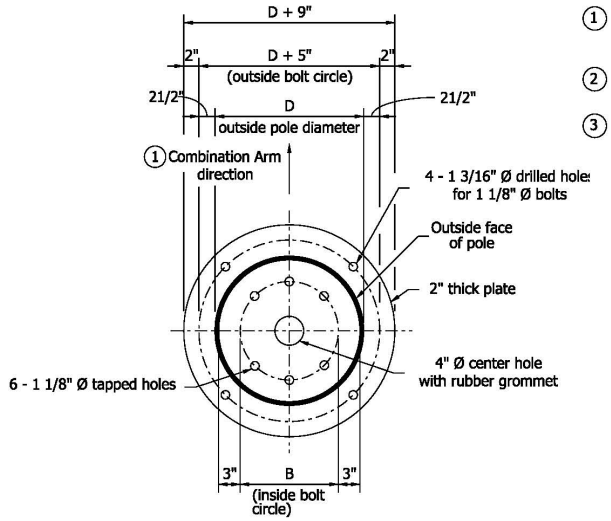

② BOTTOM CONNECTION PLATE

NOTES:

1. Orient bottom splice and bottom connection plates with combination arm as shown on the bottom splice plate detail on Standard Drawing E 805-TSCS-03.
2. All plate dimensions based upon the outside diameter D at the top of pole section 1.
3. Diameter at bottom of pole section 2 to match the diameter at the top of pole section 1.

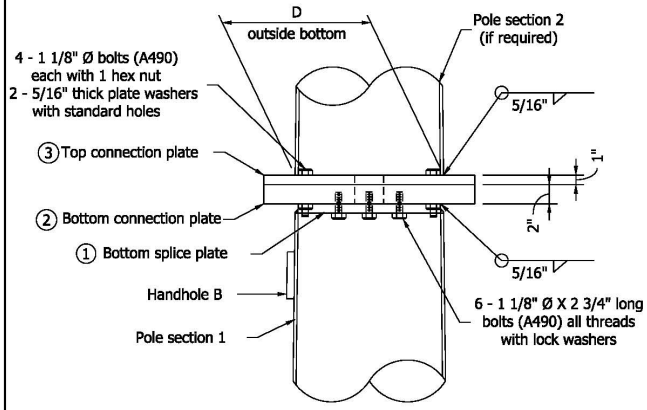

ELEVATION

INDIANA DEPARTMENT OF TRANSPORTATION	
TRAFFIC SIGNAL CANTILEVER STRUCTURE COMBINATION POLE SPLICE DETAILS FOR ARMS > 35' TO 60' AUGUST 2010	
STANDARD DRAWING NO. E 805-TSCS-12	
	/s/ XXXXXXXXX 08/01/10 DESIGN STANDARDS ENGINEER DATE
	/s/ XXXXXXXXX 08/01/10 CHIEF HIGHWAY ENGINEER DATE
DESIGN STANDARDS ENGINEER	

REVISION TO STANDARD SPECIFICATIONS, PROVISION AND STANDARD DRAWINGS

805-TSCS-13 TRAFFIC SIGNAL CANTILEVER STRUCTURE COMBINATION ARM LOADING FOR 35' ARM OR LESS

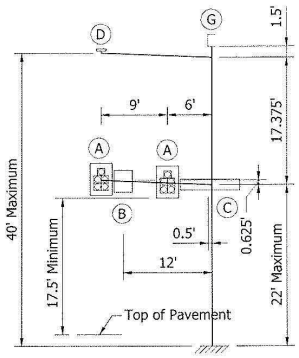

15' MAST ARM

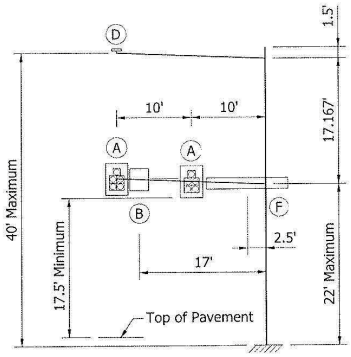

20' MAST ARM

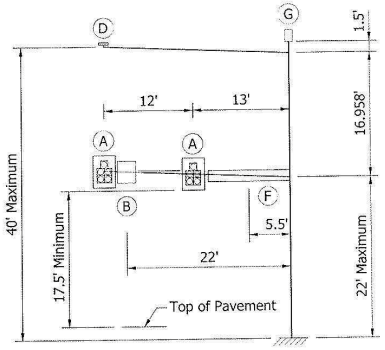

25' MAST ARM

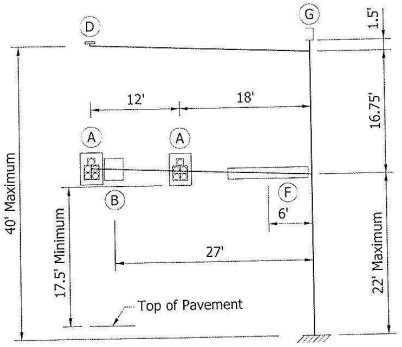

30' MAST ARM

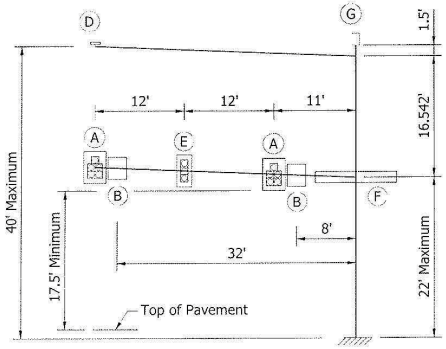

35' MAST ARM

TABLE WITH DIMENSIONS FOR PLACEMENTS OF SIGNALS, SIGNS, CAMERAS, AND LUMINAIRES

Device	Description	Device Area (Sft.)	Weight (Lbs.)
A	12" - 5 Sec. Signal With Backplates	13.1	55
B	36" x 30" Regulatory Sign	7.5	19
C	18" x 96" Street Name Sign	12.0	30
D	1 - Mounted Camera	1.0	20
E	12" - 3 Sec. Signal With Backplates	8.7	35
F	18" x 132" Street Name Sign	16.5	41
G	Top Pole Luminaire	2.4	53

NOTES:

The structure arms and pole are designed for the above loading conditions.
Foundations A and C are designed for the 35' mast arm loading condition.
Foundations B and D are designed for the 60' mast arm loading condition.

INDIANA DEPARTMENT OF TRANSPORTATION

TRAFFIC SIGNAL CANTILEVER STRUCTURE COMBINATION ARM LOADING FOR 35' ARM OR LESS

AUGUST 2010

STANDARD DRAWING NO. E 805-TSCS-13

/s/ XXXXXXXXX 08/01/10
DESIGN STANDARDS ENGINEER DATE

/s/ XXXXXXXXX 08/01/10
CHIEF HIGHWAY ENGINEER DATE

DESIGN STANDARDS ENGINEER

REVISION TO STANDARD SPECIFICATIONS, PROVISION AND STANDARD DRAWINGS

805-TSCS-14 TRAFFIC SIGNAL CANTILEVER STRUCTURE COMBINATION ARM LOADING FOR ARMS > 35′ TO 60′

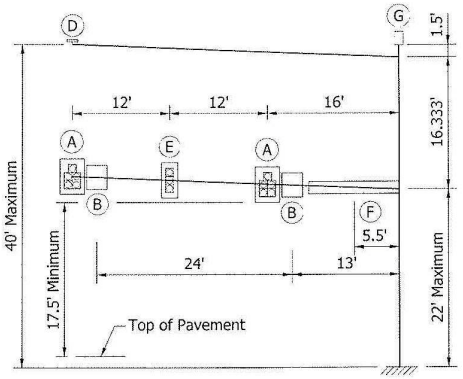

40' MAST ARM

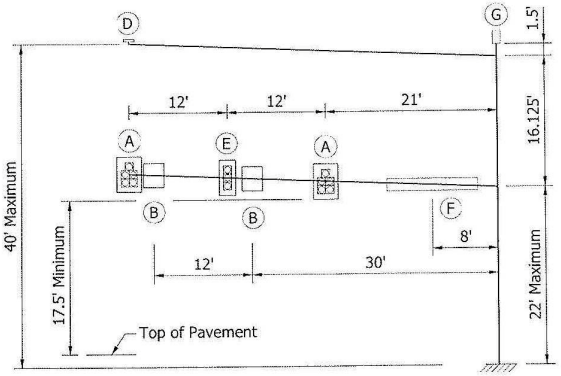

45' MAST ARM

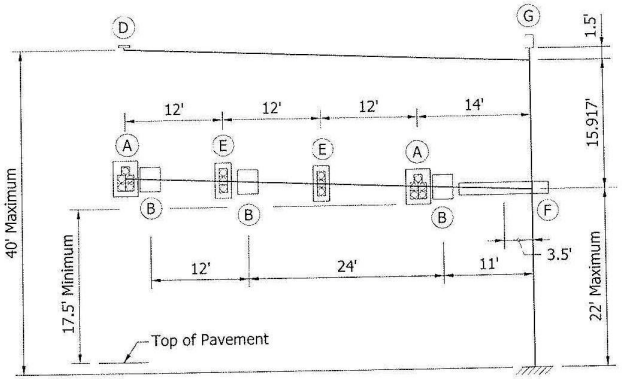

50' MAST ARM

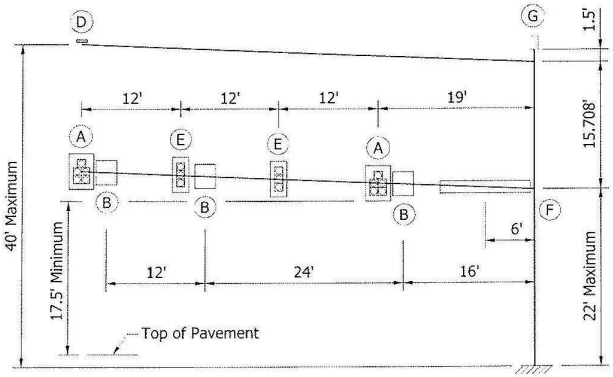

55' MAST ARM

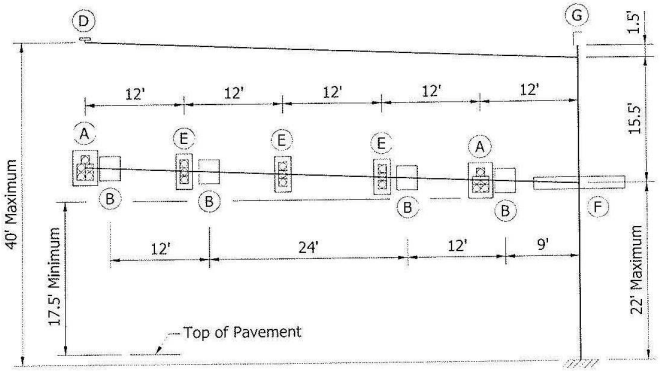

60' MAST ARM

NOTE:
See Standard Drawing No. E805-TSCS-13 for loading information table.

INDIANA DEPARTMENT OF TRANSPORTATION	
TRAFFIC SIGNAL CANTILEVER STRUCTURE COMBINATION ARM LOADING FOR ARMS > 35' TO 60' AUGUST 2010	
STANDARD DRAWING NO. E 805-TSCS-14	
	/s/ XXXXXXXXX 08/01/10 DESIGN STANDARDS ENGINEER DATE
	/s/ XXXXXXXXX 08/01/10 CHIEF HIGHWAY ENGINEER DATE
DESIGN STANDARDS ENGINEER	

REVISION TO STANDARD SPECIFICATIONS, PROVISION AND STANDARD DRAWINGS

805-TSCS-15 TRAFFIC SIGNAL CANTILEVER STRUCTURE DRILLED SHAFT FOR ARMS 35' OR LESS TYPE A

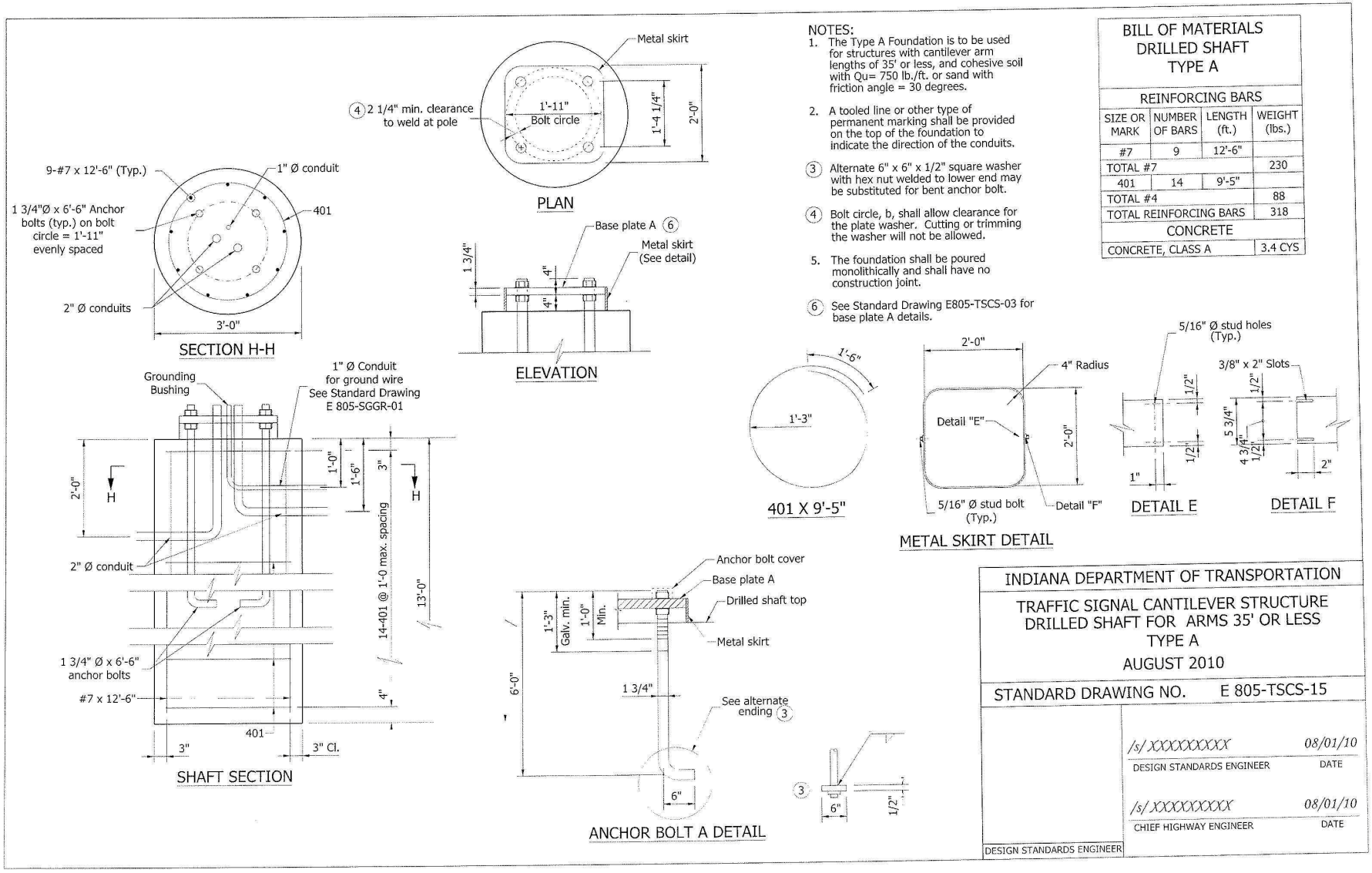

REVISION TO STANDARD SPECIFICATIONS, PROVISION AND STANDARD DRAWINGS

805-TSCS-16 TRAFFIC SIGNAL CANTILEVER STRUCTURE DRILLED SHAFT FOR ARMS > 35' TO 60' TYPE B

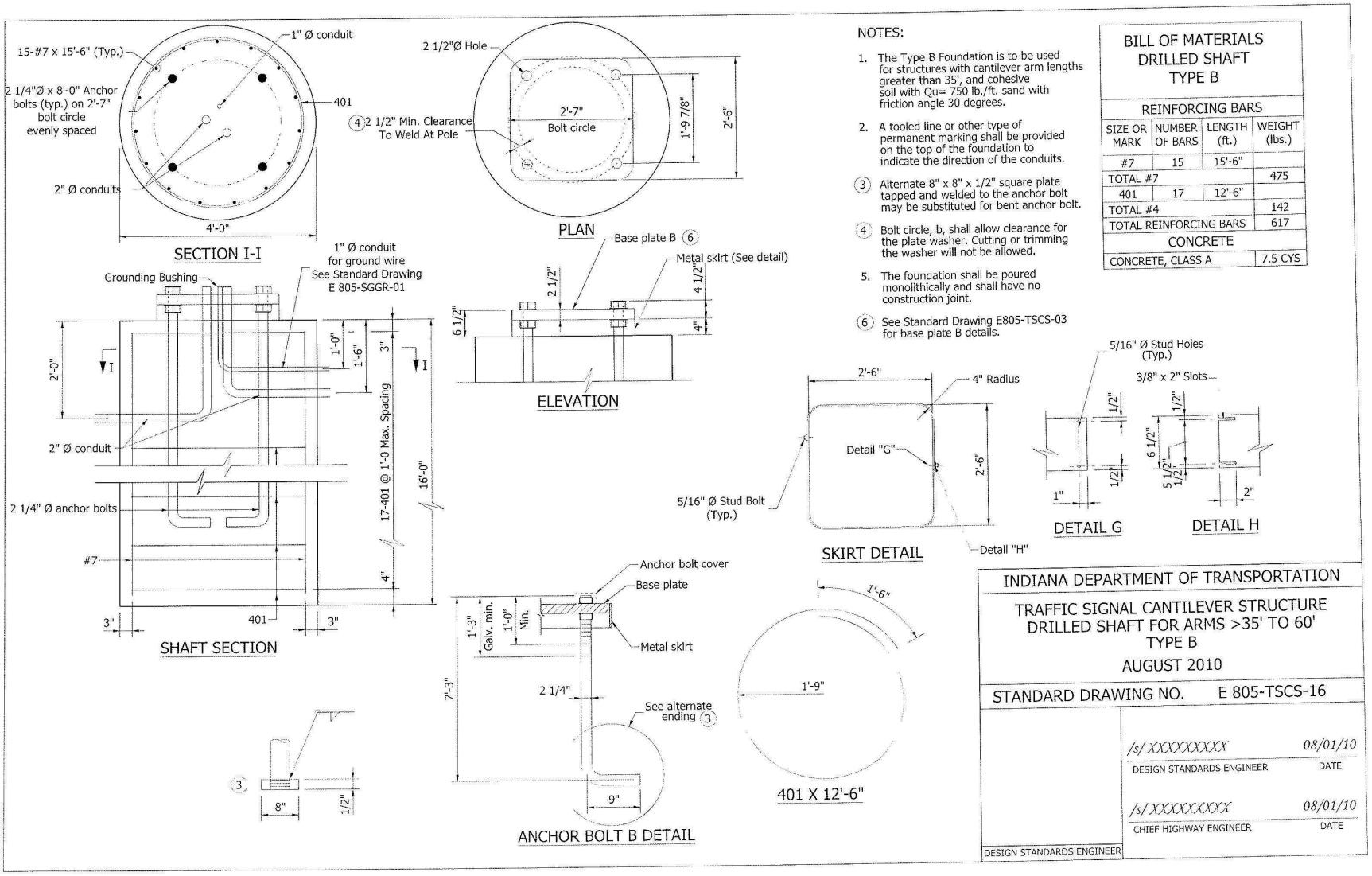

REVISION TO STANDARD SPECIFICATIONS, PROVISION AND STANDARD DRAWINGS

805-TSCS-17 TRAFFIC SIGNAL CANTILEVER STRUCTURE SPREAD FOUNDATION FOR ARMS 35′ OR LESS TYPE C

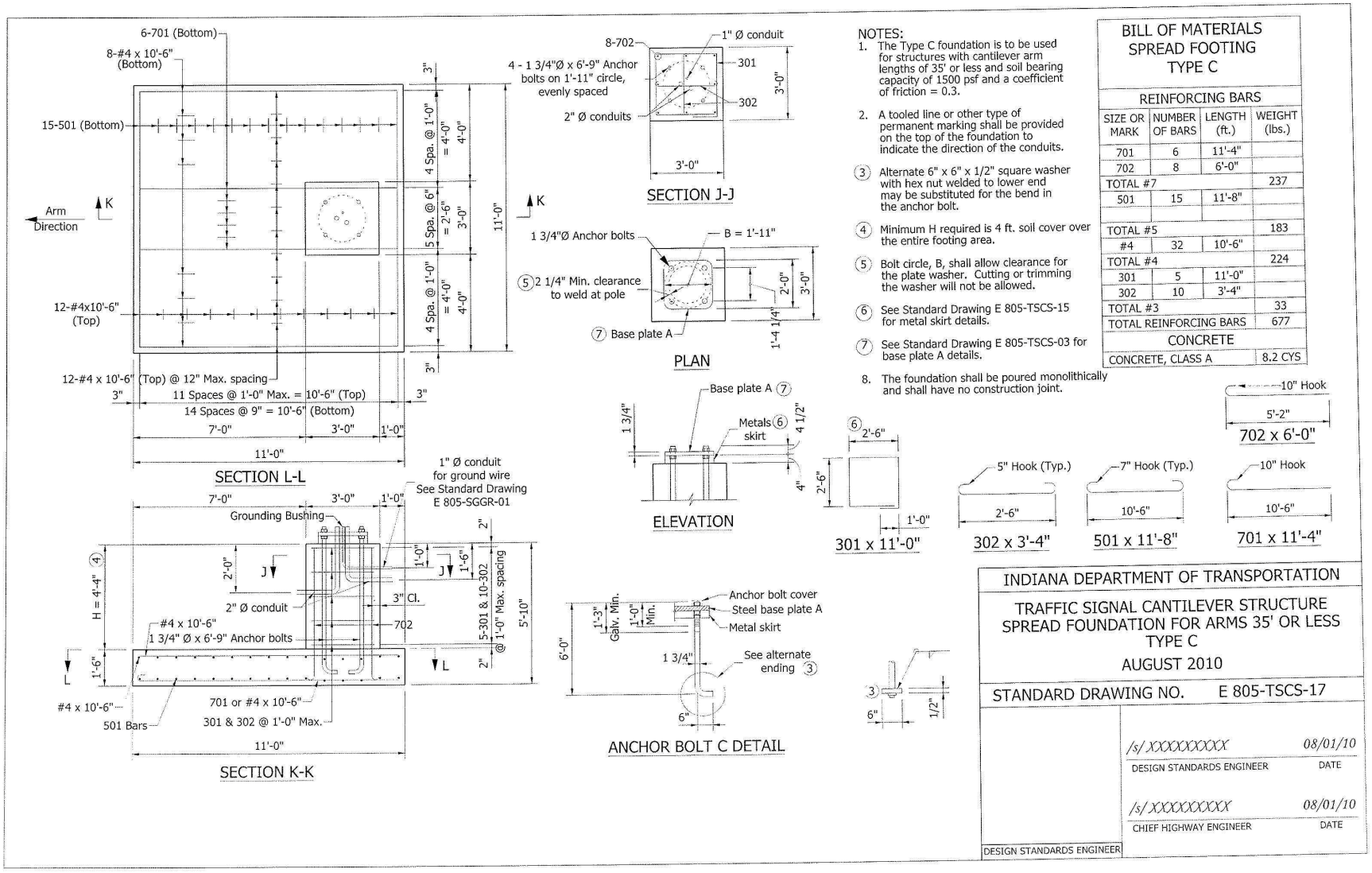

NOTES:

1. The Type C foundation is to be used for structures with cantilever arm lengths of 35' or less and soil bearing capacity of 1500 psf and a coefficient of friction = 0.3.
2. A tooled line or other type of permanent marking shall be provided on the top of the foundation to indicate the direction of the conduits.
3. Alternate 6" x 6" x 1/2" square washer with hex nut welded to lower end may be substituted for the bend in the anchor bolt.
4. Minimum H required is 4 ft. soil cover over the entire footing area.
5. Bolt circle, B, shall allow clearance for the plate washer. Cutting or trimming the washer will not be allowed.
6. See Standard Drawing E 805-TSCS-15 for metal skirt details.
7. See Standard Drawing E 805-TSCS-03 for base plate A details.
8. The foundation shall be poured monolithically and shall have no construction joint.

BILL OF MATERIALS
SPREAD FOOTING
TYPE C

REINFORCING BARS			
SIZE OR MARK	NUMBER OF BARS	LENGTH (ft.)	WEIGHT (lbs.)
701	6	11'-4"	
702	8	6'-0"	
TOTAL #7			237
501	15	11'-8"	
TOTAL #5			183
#4	32	10'-6"	
TOTAL #4			224
301	5	11'-0"	
302	10	3'-4"	
TOTAL #3			33
TOTAL REINFORCING BARS			677
CONCRETE			
CONCRETE, CLASS A			8.2 CYS

INDIANA DEPARTMENT OF TRANSPORTATION

TRAFFIC SIGNAL CANTILEVER STRUCTURE SPREAD FOUNDATION FOR ARMS 35' OR LESS TYPE C

AUGUST 2010

STANDARD DRAWING NO. E 805-TSCS-17

/s/ XXXXXXXXX 08/01/10
DESIGN STANDARDS ENGINEER DATE

/s/ XXXXXXXXX 08/01/10
CHIEF HIGHWAY ENGINEER DATE

DESIGN STANDARDS ENGINEER

REVISION TO STANDARD SPECIFICATIONS, PROVISION AND STANDARD DRAWINGS

805-TSCS-18 TRAFFIC SIGNAL CANTILEVER STRUCTURE SPREAD FOUNDATION FOR ARMS > 35′ TO 60′ TYPE D

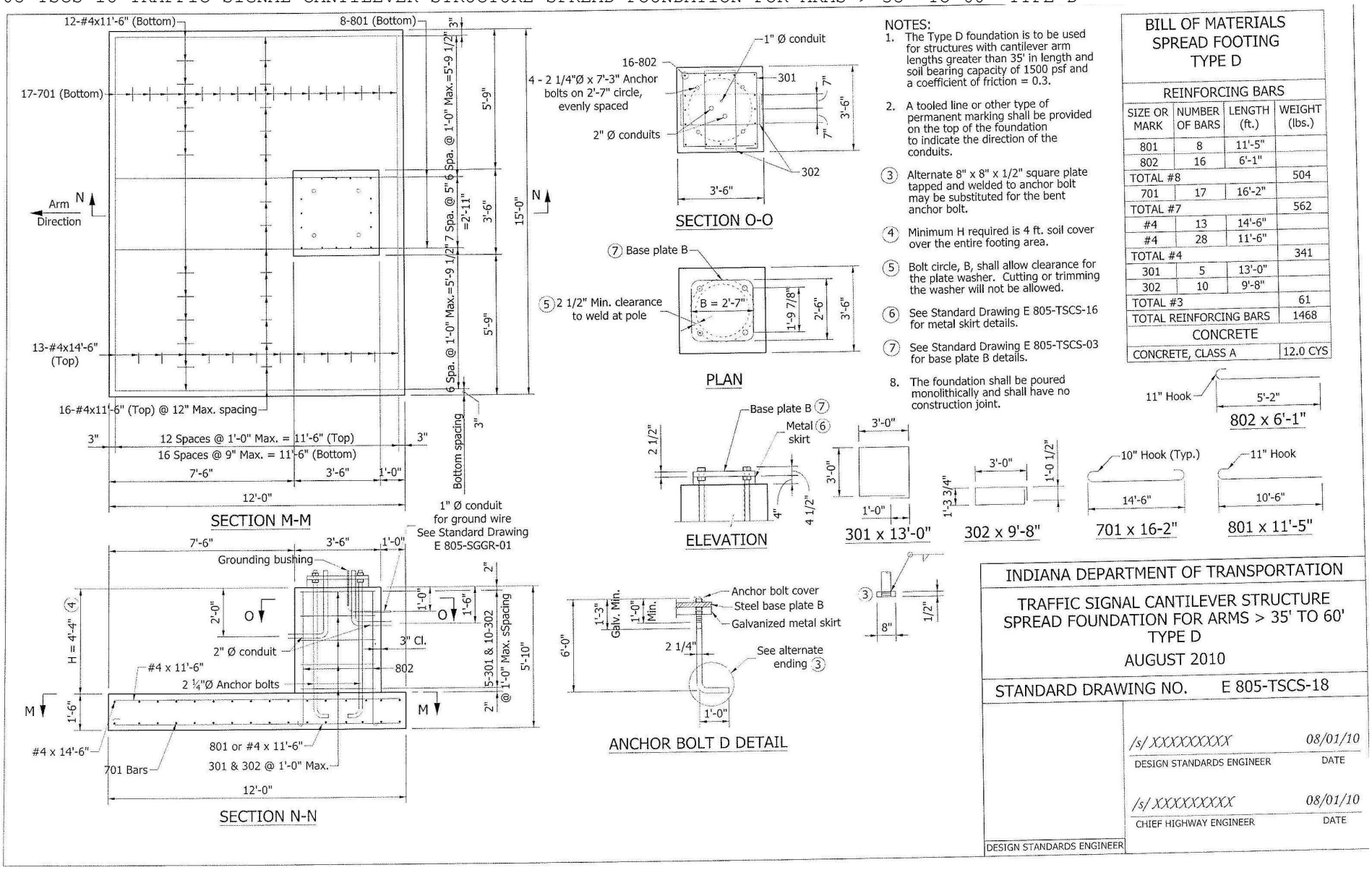

NOTES:

1. The Type D foundation is to be used for structures with cantilever arm lengths greater than 35' in length and soil bearing capacity of 1500 psf and a coefficient of friction = 0.3.
2. A tooled line or other type of permanent marking shall be provided on the top of the foundation to indicate the direction of the conduits.
3. Alternate 8" x 8" x 1/2" square plate tapped and welded to anchor bolt may be substituted for the bent anchor bolt.
4. Minimum H required is 4 ft. soil cover over the entire footing area.
5. Bolt circle, B, shall allow clearance for the plate washer. Cutting or trimming the washer will not be allowed.
6. See Standard Drawing E 805-TSCS-16 for metal skirt details.
7. See Standard Drawing E 805-TSCS-03 for base plate B details.
8. The foundation shall be poured monolithically and shall have no construction joint.

BILL OF MATERIALS
SPREAD FOOTING
TYPE D

REINFORCING BARS			
SIZE OR MARK	NUMBER OF BARS	LENGTH (ft.)	WEIGHT (lbs.)
801	8	11'-5"	
802	16	6'-1"	
TOTAL #8			504
701	17	16'-2"	
TOTAL #7			562
#4	13	14'-6"	
#4	28	11'-6"	
TOTAL #4			341
301	5	13'-0"	
302	10	9'-8"	
TOTAL #3			61
TOTAL REINFORCING BARS			1468
CONCRETE			
CONCRETE, CLASS A			12.0 CYS

INDIANA DEPARTMENT OF TRANSPORTATION

TRAFFIC SIGNAL CANTILEVER STRUCTURE SPREAD FOUNDATION FOR ARMS > 35' TO 60' TYPE D

AUGUST 2010

STANDARD DRAWING NO. E 805-TSCS-18

/s/ XXXXXXXXX 08/01/10
DESIGN STANDARDS ENGINEER DATE

/s/ XXXXXXXXX 08/01/10
CHIEF HIGHWAY ENGINEER DATE

DESIGN STANDARDS ENGINEER

77-4.03 Signal Mounting

Under most circumstances, the Department's preferred practice is to install the traffic signal using span, catenary and tether cables, or cantilever structures with poles on all four corners. Pedestrian signals are typically mounted on pedestals or poles. Pedestal or pole mounted supplemental signals may be used if there is a left-turn signal in a median or on the near side of the intersection if the intersection is significantly wide. Figures 77-4B, 77-4C, and 77-4D present the advantages and disadvantages of the post-mounted signal, cable-span signal mounting, and the cantilever signal mounting, respectively.

For span designs, steel strain poles are generally used. Steel strain poles provide greater strength, are easier to maintain and require less space. Wood poles require the use of down-guy cables and are generally limited to temporary installations.

All *signal* cantilever structures must be designed to meet the AASHTO *Standard Specifications for Structural Supports for Highway Signs, Luminaires and Traffic Signals* *2009, fifth edition.*

For INDOT road projects, signal cantilever structures and its foundations should be according to the standard drawing series 805-TSCS-1 thru 18, Signal Cantilever Structures are designed to the loading conditions per Standard Drawings 805-TSCS-13 & 14. Refer to INDOT specification section 922.05 for any signal cantilever structure requiring special designs.

Overhead highway lighting may be provided, where warranted (see Section 78-2.0), at rural signalized intersections. The traffic signal span-support pole or the cantilever pole may be used for the overhead highway lighting. Figure 77-4E provides an illustration of a combination signal-luminaire pole. The INDOT *Standard Specifications* present the design criteria for this signal pole. INDOT typically does not use combination poles.

APPROVED MINUTES

COMMENTS AND ACTION

805.03 GENERAL REQUIREMENTS
805.04 POLE INSTALLATION
805.05 PLACING SIGNAL HEADS
805.13 FOUNDATIONS
805.15 METHOD OF MEASUREMENT
805.16 BASIS OF PAYMENT
922-T-168 TRAFFIC SIGNALS MATERIALS AND EQUIPMENT
805-TSCS-01 THRU -18 SIGNAL CANTILEVER STRUCTURES

DISCUSSION: Mr. Zafar, sitting in for Mr. Wright, introduced this item and briefly explained the revisions shown as described in the proposal.

Mr. Zafar offered that the standard drawings typically are merely a guideline and that the designer or the Contractor has the option to modify the drawing details depending on project conditions and requirements.

Mr. Miller commented that the proposed spec language says that the signal arms shall be in accordance with the standard drawings. Mr. Hanza explained the intent behind the proposed revisions to the standard drawings and specs shown and Mr. Miller followed that we still need to meet the AASHTO requirements.

Upon Mr. Uremovich's inquiry, Mr. Hanza explained that the standards are for the Contractor and not the designer, and that the designer is to design per the design standards in accordance with AASHTO requirements. This was further reinforced by Mr. Zafar. Mr. Hanza also explained that the main difference is that the designer still needs to perform the calculations for the design and not merely use the standard drawings in order to insure a proper and safe design.

Further discussion by Mr. Patel revealed that the information shown on the standard drawings is for constructability and that the designer still needs to perform calculations for each application of the specified structure to be utilized on the project. The standards are in place so that "special designs" will still match up to our standard base plates, bolt patterns, and the like.

Mr. Strain pointed out that information such as drag coefficients belong in the AASHTO spec and not in our standard specs. Mr. Uremovich also pointed out that information connected with special designs and requirements need to be determined and made known prior to letting. Mr. Hanza explained that the maximum loading was determined for the signal arms shown on the standard drawings, so that the manufacturer can construct each component.

Mr. Zafar reiterated that the bottom line is that everyone still has to meet AASHTO requirements. Mr. Pankow asked if there was a deadline for meeting the AASHTO requirements. Mr. Patel explained that they have been working on this since 2003 and believe they have covered everything required for these drawings.

Mr. Pankow clarified that what is proposed is what we have already been doing anyway. The main issue of discussion involved shop drawing review time. Mr. Pankow also pointed out that the pay item description includes the arm length and the pole height, so that particular design information is available to the Contractor as well as the designer prior to letting.

Mr. Miller pointed out that we already have more information than we need in the spec and these drawings for this item. It was agreed by Mr. Miller and Mr. Pankow that the proposed information needs to be revised. Mr. Strain asked if we can move to accept the drawings, and have the language presented again at the next meeting.

Mr. Miller addressed the standard drawings and asked if these drawings are new or if they had been revised, since there are no revisions or mark-ups shown on the proposed drawings. Mr. Hanza confirmed that these drawings are new. Mr. Miller asked if this needs to be passed today, or if we can wait until we get the whole proposal the way we want it. Mr. Patel recommended approving the drawings and reworking the

APPROVED MINUTES

COMMENTS AND ACTION

805.03 GENERAL REQUIREMENTS
805.04 POLE INSTALLATION
805.05 PLACING SIGNAL HEADS
805.13 FOUNDATIONS
805.15 METHOD OF MEASUREMENT
805.16 BASIS OF PAYMENT
922-T-168 TRAFFIC SIGNALS MATERIALS AND EQUIPMENT
805-TSCS-01 THRU -18 SIGNAL CANTILEVER STRUCTURES

proposed spec language. Mr. Pankow proposed removing the 900 section language since the information is already shown on the drawings. Mr. Miller suggested that there are still things in the 900 section that needs to be corrected, and recommended that this item be withdrawn and bring it back next time in its entirety.

Mr. Zafar revised his motion to withdraw this item at this time.
Mr. Patel clarified that the drawings are okay but the spec language needs to be revised. This item was withdrawn.

Motion: Mr. Zafar Second: Mr. Ayes: Nays:	Action: ____ Passed as Submitted ____ Passed as Revised _X_ Withdrawn
Standard Specifications Sections affected: 805.16 pg 745 (2012 SS) Recurring Special Provision affected: 805-T-169 TRAFFIC SIGNALS; 922-T-168 TRAFFIC SIGNALS MATERIALS AND EQUIPMENT Standard Sheets affected: NONE Design Manual Sections affected: CHAPTER 77-4.03 GIFE Sections cross-references: NONE	____ 20__ Standard Specifications Book ____ Revise Pay Items List ____ Create RSP (No.____) Effective ____Letting RSP Sunset Date: ____ ____ Revise RSP (No.____) Effective ____Letting RSP Sunset Date: ____ Standard Drawing Effective ____ ____ Create RPD (No. ____) Effective ____Letting ____ Technical Advisory GIFE Update Req'd.? Y ___ N ___ By ____ Addition or ____ Revision Frequency Manual Update Req'd? Y__N__ By ____ Addition or ____ Revision Received FHWA Approval? ____

APPROVED MINUTES

SPECIFICATION REVISIONS

REVISION TO STANDARD SPECIFICATIONS

PROPOSAL TO STANDARDS COMMITTEE

PROBLEM(S) ENCOUNTERED: Tack coats are a problem when construction traffic tracks the material into the non-paving lanes. A tack coat that would not track would be very beneficial. AE-NT is a tack coat material that does not track and should be allowed as an alternative to to AE-T, AE-PMT, and SS-1h for tack coat applications.

PROPOSED SOLUTION: Allow AE-NT to be an alternative to AE-T, AE-PMT, and SS-1h for tack coat applications.

APPLICABLE STANDARD SPECIFICATIONS: 406 and 902

APPLICABLE STANDARD DRAWINGS: None

APPLICABLE DESIGN MANUAL SECTION: Chapter 52

APPLICABLE SECTION OF GIFE: Section 13

APPLICABLE RECURRING SPECIAL PROVISIONS:

Submitted By: Ron Walker

Title: Manager, Office of Materials Management

Organization: INDOT

Phone Number: 317-610-7251 x 204

Date: 6-27-11

APPLICABLE SUB-COMMITTEE ENDORSEMENT?This specification revision is recommended by the INDOT/APAI Technical Committee.

APPROVED MINUTES

REVISION TO STANDARD SPECIFICATIONS

SECTION 406 - TACK COAT
406.02 MATERIALS
SECTION 507 - PCCP RESTORATION
507.05(b) PARTIAL DEPTH PATCHING

The Standards Specifications are revised as follows:

SECTION 406, BEGIN LINE 9, INSERT AS FOLLOWS:

406.02 Materials

The type and grade of asphalt material shall be in accordance with the following:

Asphalt Emulsion, AE-T, AE-PMT, SS-1h, *AE-NT* ..... 902.01(b)
PG Asphalt Binder, PG 64-22 ..... 902.01(a)

SECTION 507, BEGIN LINE 107, INSERT AND DELETE AS FOLLOWS:

(b) Partial Depth Patching

Partial depth patching shall be constructed at locations shown on the plans. Existing joints directed to be patched partial depth, shall be milled to a depth of 3 in. (75 mm) the full width of the lane. The minimum length of milling is 6 in. (150 mm) beyond the map-cracked area. The milled area shall be cleaned of all loose material prior to patching. Cleaning shall be by blowing the milled areas with compressed air at a minimum pressure of 100 psi (690 kPa). When the milled areas are satisfactorily cleaned, the milled areas shall be tacked with ~~AE-T~~ *asphalt material* in accordance with 406 and patched with HMA.

APPROVED MINUTES

REVISION TO STANDARD SPECIFICATIONS

SECTION 902 - ASPHALT MATERIALS
902.01(b) ASPHALT EMULSIONS

The Standards Specifications are revised as follows:

SECTION 902, AFTER LINE 115, DELETE AND INSERT AS FOLLOWS:

AE-NT is a fast setting, hard penetration type, intended for tack coats.

The requirements for asphalt emulsions shall be in accordance with the following:

APPROVED MINUTES

REVISION TO STANDARD SPECIFICATIONS

SECTION 902 - ASPHALT MATERIALS
902.01(b) ASPHALT EMULSIONS

Characteristic [1] [2]	AASHTO Test Method	RS-2	HFRS-2	AE-90	AE-90S	AE-T	*AE-NT*	AE-F	SS-1h	AE-150	AE-150L	AE-PL	AE-PMT [6]	AE-PMP [6]
Tests on Emulsion														
Viscosity, Saybolt Furol at 25°C, min.	T 59			50			*15*		20	50				20+
Viscosity, Saybolt Furol at 25°C, max.	T 59					100	*100*	100	100		100	115	100	
Viscosity, Saybolt Furol at 50°C, min.	T 59	75	75		50					75				
Viscosity, Saybolt Furol at 50°C, max.	T 59	400	400							300				
Demulsibility w/35 mL, 0.02N CaC12, %, min.	T 59	50	50		30			25						
Demulsibility w/50 mL, 0.10N CaC12, %, min.	T 59			75		75							25+	25+
Oil Distillate by Distillation, mL/100 g Emul, *max.* [3]	T 59	4.0	4.0	4.0	3.0	4.0	*4.0*	4.0	4.0	7.0	7.0	3.0	3.0	3.0
Residue by Distillation, %, min.	T 59	68	68	68	65[5]	54	*50*	27	57	68	60	30		
Residue by Distillation, %, max.	T 59					62		35			65			
Sieve Test, %, max.	T 59	0.10	0.10	0.10	0.10	0.10	*0.30*	0.10	0.10	0.10	0.10	0.10	0.10	0.10
Penetrating Ability, mm, min.	902.02(w)											6		
Stone Coating Test, %	902.02(t)3a			90						90	90			
Settlement, %, max.	T 59	5	5	5			*5*							
Storage Stability, %, max.	T 59				1									
Asphalt Content by Distillation at 204°C, %, min.													54	45
Asphalt Content by Distillation at 204°C, %, max.													62	

APPROVED MINUTES

REVISION TO STANDARD SPECIFICATIONS

SECTION 902 - ASPHALT MATERIALS
902.01(b) ASPHALT EMULSIONS (CONTINUED)

Tests on Residue														
Penetration (0.1 mm) at 25°C, 100g, 5 s, min. (4)	T 49	100	100	100	90	50		40	40				50	300+
Penetration (0.1 mm) at 25°C, 100g, 5 s, max. (4)	T 49	200	200	200	150	200	*40*	90	90				200	
Penetration (0.1 mm) at 25°C, 50g, 5 s, min. (4)	T 49									100	100			
Penetration (0.1 mm) at 25°C, 50g, 5 s, max. (4)	T 49									300	300			
Ductility at 25°C, mm, min.	T 51	400	400	400		400			400					
Solubility in Org. Sol., %, min.	T 44	97.5	97.5	97.5	97.5	97.5	*97.5*	97.5	97.5	97.5	97.5	97.5	97.5	97.5
~~Float Test at 50°C, s, max.~~ (4)	~~T 50~~													
Float Test at 60°C, s, min. (4)	T 50		1200	1200	1200	1200				1200	1200			
Force Ratio	T 300				0.3									
Elastic Recovery, at 4°C	T 301				58									
Polymer Content by Infrared													1.5+	1.5+

Notes:
(1) Broken samples or samples more than 10 days old will not be tested.
(2) Combined percentage of the residue and oil distillate by distillation shall be at least 70% (note the different units – ml for oil and % for residue).
(3) Oil distillate shall be in accordance with ASTM D 396, table 1, grade no. 1
(4) The Engineer may waive the test.
(5) Maximum temperature to be held for 15 minutes *at* 200 ± 5°C.
(6) Asphalt shall be polymerized prior to emulsification.

APPROVED MINUTES

COMMENTS AND ACTION

406.02 MATERIALS
507.05(b) PARTIAL DEPTH PATCHING
902.01(b) ASPHALT EMULSIONS

DISCUSSION: Mr. Walker introduced this item and explained the need for a trackless tack coat.

Mr. Walker then went on to explain the revisions shown on the previous pages, explaining the material and noted the testing requirements being added and that the float test is being removed.

Mr. Keefer inquired if this material costs more than our standard tack coat. Mr. Bonte of Reith-Riley answered that yes, it does cost a little more. Mr. Pankow suggested that the cost may be offset by not needing to clean off the roadway and ramps of the tracked material. Mr. Miller mentioned that this material has more particles in it and it is a harder material, and asked if it can still pass through the spray nozzles. Mr. Walker said it should be okay.

Motion: Mr. Walker Second: Mr. Keefer Ayes: 6 Nays: 0	Action: _X_ Passed as Submitted ____ Passed as Revised ____ Withdrawn
Standard Specifications Sections affected: 406.02 pg 272; 507.05(b) pg 345; 902.01 pg 804, pg 805. Recurring Special Provision affected: NONE Standard Sheets affected: NONE Design Manual Sections affected: NONE GIFE Sections cross-references: NONE	_X_ 2014 Standard Specifications Book ____ Revise Pay Items List _X_ Create RSP (No.406-R-583) Effective November 01, 2011 Letting RSP Sunset Date: ____ ____ Revise RSP (No.____) Effective ____Letting RSP Sunset Date: ____ Standard Drawing Effective ____ ____ Create RPD (No. ____) Effective ____Letting ____ Technical Advisory GIFE Update Req'd.? Y ___ N ___ By ____ Addition or ____ Revision Frequency Manual Update Req'd? Y___N___ By ____ Addition or ____ Revision Received FHWA Approval? Yes

APPROVED MINUTES