INDIANA DEPARTMENT OF TRANSPORTATION
Driving Indiana's Economic Growth

100 North Senate Avenue
Room N925
Indianapolis, Indiana 46204

PHONE: (317) 232-5502
FAX: (317) 234-5133

Mitchell E. Daniels, Jr., Governor
Michael B. Cline, Commissioner

FINAL DRAFT MINUTES

October 21, 2010 Standards Committee Meeting

(Changes by the Action of the Standards Committee Shown as Highlighted in Yellow)

FINAL DRAFT MINUTES

MEMORANDUM

November 15, 2010.

TO: Standards Committee

FROM: Scott Trammell, Secretary

RE: Minutes for the October 21, 2010 Standards Committee Meeting

The Standards Committee meeting was called to order by Mr. Miller at 9.02 a.m. on October 21, 2010 in the 9th Floor Conference Center. The meeting was adjourned at 10.11 a.m.

The following committee members were in attendance:

Mark Miller, Chairman
Greg Pankow, Constr. Mgmt.
John Wright, Roadway Services
Tony Uremovich*, Str. Services
Ron Walker, Office of Materials Mgmt.
Dave Andrewski, Pvmt. Engineering
Bob Cales, Contract Admin.
Dave Boruff, Traffic Admin.
Jim Keefer, Fort Wayne Dist.
Tom Caplinger, Crawfordsville Dist.

**Proxy for Anne Rearick*

Also in attendance were the following:

Bren George, FHWA
Scott Trammell, Secretary
Dan McQueen, INDOT
Kenny Anderson, INDOT, OMM
Lana Podorvanova, INDOT
Jim Reilman, INDOT
Steve Fisher, INDOT Sitemanager
Paul Berebitsky, ICA
Nayyar Siddiki, INDOT, OMM
Randy Strain, INDOT

The following agenda items were considered.

A. GENERAL BUSINESS ITEMS

Mr. Caplinger – discussed pay items – field office, cell phones.
Mr. Uremovich mentioned that he is sitting in for Ms. Rearick, since she has excused herself from this committee.

OLD BUSINESS

(No items considered)

NEW BUSINESS

Approval of the September 16, 2010 Minutes
All approved

Required Certifications For Work Type E(A).
Traffic Control: Electrical Installations (Section 805.03).
Introduced by Mr. Miller. Editorial change. No questions.

B. CONCEPTUAL PROPOSAL ITEMS

OLD BUSINESS

(No items considered)

NEW BUSINESS

C. STANDARD SPECIFICATIONS, SPECIAL PROVISIONS AND STANDARD DRAWINGS PROPOSED ITEMS

OLD BUSINESS

(No items considered)

NEW BUSINESS

Item No. 01 10/21/10 (2010 SS)	Mr. Walker	page 04
715.13	Method of Measurement	
715.14	Basis of Payment	
ACTION:	PASSED AS SUBMITTED	

Item No. 02 10/21/10 (2010 SS)	Mr. Walker	page 07
907.21	Smooth Wall Polyethylene Pipe	
907.25(a)	Solid Wall HDPE Pipe Liner	
ACTION:	PASSED AS SUBMITTED	

Item No. 03 10/21/10 (2010 SS)	Mr. Walker	page 10
703.06	Placing and Fastening	
910.01(b)2	Threaded Tie Bar Assembly	
ACTION:	PASSED AS SUBMITTED	

FINAL DRAFT MINUTES

Item No. 04 10/21/10 (2010 SS) Mr. Walker page 14

910.02(f)2d	Certification

ACTION: PASSED AS SUBMITTED

Item No. 05 10/21/10 (2010 SS) Mr. Pankow page 17

203.27(a)	Contract Quantity
211.09	Method of Measurement
211.10	Basis of Payment
213.08	Method of Measurement
213.09	Basis of Payment
216.11	Method of Measurement

ACTION: PASSED AS SUBMITTED (see comments)

Item No. 06 10/21/10 (2010 SS) Ms. Rearick page 23

Standard Drawings:

706-CBRT-01	BRIDGE RAILING TRANSITION WBC *OR TBC* DETAILS AT END BENT
706-CBRT-~~03~~*02*	BRIDGE RAILING TRANSITION WBC ATTACHMENT OF GUARDRAIL
706-CBRT-03	*BRIDGE RAILING TRANSITION TBT DETAILS AT END BENT*
706-CBRT-~~02~~*04*	BRIDGE RAILING TRANSITION TBC OR TBT ATTACHMENT OF GUARDRAIL

ACTION: PASSED AS REVISED

Item No. 07 10/21/10 (2010 SS) Mr. Walker page 29

Recurring Special Provision:

203-R-562	DYNAMIC CONE PENETROMETER TESTING FOR EMBANKMENT

ACTION: PASSED AS SUBMITTED

Item No. 08 10/21/10 (2010 SS) Mr. Walker page 35

904.06(c)	Exceptions to AASHTO T 27 for Coarse Aggregates

ACTION: PASSED AS SUBMITTED

Item No. 09 10/21/10 (2010 SS) Mr. Walker page 38

401.05	Volumetric Mix Design
401.09	Acceptance of Mixtures
401.16	Density
401.20(a)	MSG
402.16	Low Temperature Compaction Requirements
410.05	SMA Mix Design
410.09	Acceptance of Mixtures
410.16	Density
410.20(a)	MSG

ACTION: PASSED AS SUBMITTED

/cc: Committee Members (11)
FHWA (3)
ICA (1)

FINAL DRAFT MINUTES

Mr. Walker
Date: 10/21/10

SPECIFICATION REVISIONS

REVISION TO THE STANDARD SPECIFICATIONS

PROPOSAL TO STANDARDS COMMITTEE

PROBLEM(S) ENCOUNTERED: An item for Bridge Deck Drainage System paid by linear feet was created at the March 18, 2010 meeting. Pay by the linear foot measure is proving to be cumbersome as there are several fittings in the drainage system that are converted to a length of pipe and result in a pay quantity not representative of the actual length placed. By having this item paid by the linear measure, the project personnel need to access areas deemed difficult to access in order to measure and verify the quantity.

PROPOSED SOLUTION: Modify Item 02 of the 3-18-10 agenda to change the method of measurement and basis of payment to lump sum. This also coincides with one of the Team Indiana goals of using lump sum items where practical.

APPLICABLE STANDARD SPECIFICATIONS: 715

APPLICABLE STANDARD DRAWINGS: None

APPLICABLE DESIGN MANUAL SECTION: 33-2.04

APPLICABLE SECTION OF GIFE: None

APPLICABLE RECURRING SPECIAL PROVISIONS: None

Submitted By: Ron Walker

Title: Manager, Office of Materials Management

Organization: INDOT

Phone Number: 610-7251

Date: September 20, 2010

APPLICABLE SUB-COMMITTEE ENDORSEMENT? INDOT Pipe Committee, 4/30/10 meeting.

FINAL DRAFT MINUTES

REVISION TO THE STANDARD SPECIFICATIONS

SECTION 715 – PIPE CULVERTS, AND STORM AND SANITARY SEWERS
715.13 METHOD OF MEASUREMENT
715.14 BASIS OF PAYMENT

Note: Changes that are shown in italic have been approved by the Standards Committee on March 18, 2010 (Item No.02 pages 23 and 24 of the Approved Minutes) Meeting. Proposed changes shown as highlighted in gray.

The Standard Specifications are revised as follows:

SECTION 715, AFTER LINE 412, INSERT AS FOLLOWS:

Where used other than as a roadway drain extension pipe or as a bridge deck drain system, cast iron soil pipe will be measured by the pound (kilogram) based on the theoretical weight (mass) shown on the plans.

Roadway drain extension pipe will be measured per each drain extended.

Pipe used as drainage pipe through concrete masonry or pipe used for bridge deck drainage system will not be measured for payment.

SECTION 715, AFTER LINE 463, DELETE AND INSERT AS FOLLOWS:

715.14 Basis of Payment

The accepted quantities of pipe will be paid for at the contract unit price per linear foot (meter) for pipe of the type, shape, and size specified, complete in place. *Where used other than as a roadway drain casting extension pipe or as a bridge deck drain system, cast iron soil pipe will be paid for at the contract unit price per pound (kilogram) for the diameter specified.*

SECTION 715, AFTER LINE 538, INSERT AS FOLLOWS:

Pipe, Bridge Deck Drain System.....~~LFT (m)~~LS
Pipe, Drainage through Concrete Masonry..... LS

FINAL DRAFT MINUTES

COMMENTS AND ACTION

SECTION 715 – PIPE CULVERTS, AND STORM AND SANITARY SEWERS
715.13 METHOD OF MEASUREMENT
715.14 BASIS OF PAYMENT

DISCUSSION: Introduced by Mr. Walker. Presented by Mr. Reilman.
Mr. Miller asked if the information sufficient in plans?
Mr. Reilman replied that yes, the designer is to specify what is needed.
What is shown on plans will be what is shown in bill of materials.
Discussion between Mr. Berebitsky/Mr. Keefer – no feedback from Industry.
T's, Y's, and elbows not paid for by each, so lump sum for the entire system makes sense.

Motion: Mr. Walker Second: Mr. Keefer Ayes: 9 Nays: 0	Action: __X__ Passed as Submitted ____ Passed as Revised ____ Withdrawn
Standard Specifications Sections affected: 715.13 pg 591; 715.14 pg 593. Recurring Special Provision affected: NONE Standard Sheets affected: 715-R-574 MANDREL TESTING OF THERMOPLASTIC PIPES Design Manual Sections affected: 33-2.04 GIFE Sections cross-references: NONE	__X__ 2012 Standard Specifications Book ____ Revise Pay Item List ____ Create RSP (No.____) Effective ____Letting RSP Sunset Date: ____ ____ Revise RSP (No.____) Effective ____Letting RSP Sunset Date: ____ Standard Drawing Effective ____ ____ Create RPD (No. ____) Effective ____Letting ____ Technical Advisory GIFE Update Req'd.? Y ___ N ___ By ____ Addition or ____ Revision Frequency Manual Update Req'd? Y___N___ By ____ Addition or ____ Revision Received FHWA Approval? Yes

FINAL DRAFT MINUTES

Mr. Walker
Date: 10/21/10

SPECIFICATION REVISIONS

REVISION TO THE STANDARD SPECIFICATIONS

PROPOSAL TO STANDARDS COMMITTEE

PROBLEM(S) ENCOUNTERED: At the March 18, 2010 meeting, item 2 deleted the cell classifications for pipes that are in accordance with ASTM F 714. Subsequently we were advised that the ASTM that we based the changes upon had been revised.

PROPOSED SOLUTION: Add cell classification language and grade language back into the respective specification sections that reference ASTM F 714 pipe.

APPLICABLE STANDARD SPECIFICATIONS: 907.21 and 907.25(a)

APPLICABLE STANDARD DRAWINGS: None

APPLICABLE DESIGN MANUAL SECTION: None

APPLICABLE SECTION OF GIFE: None

APPLICABLE RECURRING SPECIAL PROVISIONS: None

Submitted By: Ron Walker

Title: Manager, Office of Materials Management

Organization: INDOT

Phone Number: 610-7251

Date: September 20, 2010

APPLICABLE SUB-COMMITTEE ENDORSEMENT? None

FINAL DRAFT MINUTES

REVISION TO THE STANDARD SPECIFICATIONS

SECTION 907 – CONCRETE, CLAY, AND PLASTIC DRAINAGE COMPONENTS
907.21 SMOOTH WALL POLYETHYLENE PIPE
907.25(a) SOLID WALL HDPE PIPE LINER

Note: Text that is shown in italic and strikethrough has been approved by the Standards Committee on March 18, 2010 Meeting. Proposed changes shown as highlighted in gray.

The Standard Specifications are revised as follows:

SECTION 907, BEGIN LINE 209, DELETE AND INSERT AS FOLLOWS:

907.21 Smooth Wall Polyethylene Pipe

Pipe shall be in accordance with ASTM F 714 for nominal diameters of 39 in. (1000 mm) or less. Fittings shall be in accordance with ASTM F 1055. The pipe sizes shall be in accordance with ISO sizing system. The pipe dimension ratio shall be 26 or less. ~~The compound used in manufacturing this type of pipe shall have a minimum cell class in accordance with 335434C as shown in ASTM D 3350.~~ *The resin used in manufacturing this type of pipe shall have a minimum cell classification of 335434C in accordance with ASTM D 3350 or a minimum grade of PE4710 in accordance with ASTM F 714.* Qualification requirements for the manufacturers shall be in accordance with ~~907.16~~ *ITM 806, Procedure A.*

SECTION 907, BEGIN LINE 251, DELETE AND INSERT AS FOLLOWS:

(a) Solid Wall HDPE Pipe Liner

Solid wall HDPE pipe liner shall be in accordance with ASTM F 714. The maximum standard dimension ratio, SDR, for the liner as defined in ASTM F 412 shall be 32.5. ~~The resin used in the fabrication of the liner shall have a minimum cell classification of 345464C as shown in ASTM D 3350.~~*The resin used in the manufacture of the liner shall have a minimum cell classification of 345464C in accordance with ASTM D 3350 or a minimum grade of PE4710 in accordance with ASTM F 714.*

FINAL DRAFT MINUTES

COMMENTS AND ACTION

SECTION 907 – CONCRETE, CLAY, AND PLASTIC DRAINAGE COMPONENTS
907.21 SMOOTH WALL POLYETHYLENE PIPE
907.25(a) SOLID WALL HDPE PIPE LINER

DISCUSSION:
Introduced by Mr. Walker. Presented by Mr. Anderson.
No questions, no comments.

Motion: Mr. Walker Second: Mr. Cales Ayes: 9 Nays: 0	Action: __X__ Passed as Submitted ____ Passed as Revised ____ Withdrawn
Standard Specifications Sections affected: 907.21 pg 796; 907.25(a) pg 797. Recurring Special Provision affected: 715-R-574 MANDREL TESTING OF THERMOPLASTIC PIPES Standard Sheets affected: NONE Design Manual Sections affected: 33-2.04 GIFE Sections cross-references: NONE	__X__ 2012 Standard Specifications Book ____ Revise Pay Item List ____ Create RSP (No.____) Effective ____Letting RSP Sunset Date: ____ ____ Revise RSP (No.____) Effective ____Letting RSP Sunset Date: ____ Standard Drawing Effective ____ ____ Create RPD (No. ____) Effective ____Letting ____ Technical Advisory GIFE Update Req'd.? Y ___ N ___ By ____ Addition or ____ Revision Frequency Manual Update Req'd? Y___N___ By ____ Addition or ____ Revision Received FHWA Approval? Yes

FINAL DRAFT MINUTES

Mr. Walker
Date: 10/21/10

SPECIFICATION REVISIONS

REVISION TO THE STANDARD SPECIFICATIONS

PROPOSAL TO STANDARDS COMMITTEE

PROBLEM(S) ENCOUNTERED: Minor adjustment in the minimum yield strength of the threaded tie bar assembly.

PROPOSED SOLUTION: Threaded tie bar assemblies are usually tested for strength, not for load. Thus, the corrections are proposed.

APPLICABLE STANDARD SPECIFICATIONS: 703.06 and 910.01(b)

APPLICABLE STANDARD DRAWINGS: None

APPLICABLE DESIGN MANUAL SECTION: None

APPLICABLE SECTION OF GIFE: None

APPLICABLE RECURRING SPECIAL PROVISIONS: None

Submitted By: Ron Walker

Title: Manager, Office of Materials Management

Organization: INDOT

Phone Number: 610-7251

Date: September 17, 2010

APPLICABLE SUB-COMMITTEE ENDORSEMENT? None

FINAL DRAFT MINUTES

REVISION TO THE STANDARD SPECIFICATIONS

SECTION 703 – REINFORCING BARS
703.06 PLACING AND FASTENING

The Standard Specifications are revised as follows:

SECTION 703, BEGIN LINE 112, DELETE AND INSERT AS FOLLOWS:

Threaded tie bar assemblies may be used in lieu of spliced reinforcing bars shown on the plans. Threaded tie bar assemblies shall achieve the minimum ~~load~~ *strength* in accordance with 910.01(b)2. The Contractor shall coat any exposed part of threaded bar assemblies in accordance with 910.01(b)2.

FINAL DRAFT MINUTES

REVISION TO THE STANDARD SPECIFICATIONS

SECTION 910 – METAL MATERIALS
910.01(b)2 THREADED TIE BAR ASSEMBLY

The Standard Specifications are revised as follows:

SECTION 910, BEGIN LINE 26, DELETE AND INSERT AS FOLLOWS:

2. Threaded Tie Bar Assembly

The threaded tie bar assembly shall be deformed billet steel, grade 60 (420) or higher, in accordance with 910.01(b)1 and a coupling device. ~~The tie *bar* assembly shall achieve a minimum load of 76.144 kip/in.^{2} (525 MPa)*strength of 125% of the nominal yield strength of the bar from which it is manufactured*~~. *The minimum strength of the tie bar assembly shall be 125% of the designated yield strength of the bar from which it is manufactured.* Where epoxy coated threaded tie bar assemblies are specified, an epoxy coating with a minimum film thickness of 6 mils (150 µm) shall be applied to the coupling device and epoxy coated reinforcing bars shall be provided in accordance with 910.01(b)9 with the exception that the epoxy coated bar is not required to be furnished from the list of Certified Reinforcing Bar Epoxy Coaters.

FINAL DRAFT MINUTE

COMMENTS AND ACTION

703.06 PLACING AND FASTENING
910.01(b)2 THREADED TIE BAR ASSEMBLY

DISCUSSION:
Introduced by Mr. Walker. Presented by Mr. Anderson.

Mr. Berebitsky asked if the yield strength of the bar is known, as manufactured.
Mr. Anderson answered that yes, it is. The steel is grade stamped.
Mr. Reilman commented that the Contractor has the option of providing a higher grade bar.
Possible editorial change forthcoming. But passes as is for now.

Motion: Mr. Walker Second: Mr. Cales Ayes: 9 Nays: 0	Action: X Passed as Submitted ____ Passed as Revised ____ Withdrawn
Standard Specifications Sections affected: 703.06 pg 509; 910.01(b)2 pg 819. Recurring Special Provision affected: NONE Standard Sheets affected: NONE Design Manual Sections affected: NONE GIFE Sections cross-references: NONE	X 2012 Standard Specifications Book ____ Revise Pay Item List ____ Create RSP (No.____) Effective ____Letting RSP Sunset Date: ____ ____ Revise RSP (No.____) Effective ____Letting RSP Sunset Date: ____ Standard Drawing Effective ____ ____ Create RPD (No. ____) Effective ____Letting ____ Technical Advisory GIFE Update Req'd.? Y ___ N ___ By ____ Addition or ____ Revision Frequency Manual Update Req'd? Y___N___ By ____ Addition or ____ Revision Received FHWA Approval? Yes

FINAL DRAFT MINUTES

Mr. Walker
Date: 10/21/10

SPECIFICATION REVISIONS

REVISION TO THE STANDARD SPECIFICATIONS

PROPOSAL TO STANDARDS COMMITTEE

PROBLEM(S) ENCOUNTERED: Some confusion and concern over whether these samples need a certification.

PROPOSED SOLUTION: Delete the language that excludes shoes and bearing assembly bolts from certification.

APPLICABLE STANDARD SPECIFICATIONS: 910.02(f)2

APPLICABLE STANDARD DRAWINGS: None

APPLICABLE DESIGN MANUAL SECTION: None

APPLICABLE SECTION OF GIFE: None

APPLICABLE RECURRING SPECIAL PROVISIONS: None

Submitted By: Ron Walker

Title: Manager, Office of Materials Management

Organization: INDOT

Phone Number: 610-7251

Date: September 17, 2010

APPLICABLE SUB-COMMITTEE ENDORSEMENT? None

FINAL DRAFT MINUTES

REVISION TO THE STANDARD SPECIFICATIONS

SECTION 910 – METAL MATERIALS
910.02(f)2d CERTIFICATION

The Standard Specifications are revised as follows:

SECTION 910, BEGIN LINE 282, DELETE AS FOLLOWS:

d. Certification

The supplier shall provide a certification of compliance with all requirements for high strength bolts, nuts, and washers used in the assembly of structural steel in bridges~~, excluding shoes and bearing assemblies~~. The certification, in addition to complying with the applicable requirements of 916, shall include the lot number on the shipping package and indicate when or where all testing was performed.

FINAL DRAFT MINUTES

COMMENTS AND ACTION

910.02(f)2d CERTIFICATION

DISCUSSION:
Introduced by Mr. Walker. Presented by Mr. Anderson.

No questions. No comments.

Motion: Mr. Walker Second: Mr. Wright Ayes: 9 Nays: 0	Action: __X__ Passed as Submitted ____ Passed as Revised ____ Withdrawn
Standard Specifications Sections affected: 910.02 pg 825. Recurring Special Provision affected: NONE Standard Sheets affected: NONE Design Manual Sections affected: NONE GIFE Sections cross-references: NONE	__X__ 2012 Standard Specifications Book ____ Revise Pay Item List ____ Create RSP (No.____) Effective ____Letting RSP Sunset Date: ____ ____ Revise RSP (No.____) Effective ____Letting RSP Sunset Date: ____ Standard Drawing Effective ____ ____ Create RPD (No. ____) Effective ____Letting ____ Technical Advisory GIFE Update Req'd.? Y ___ N ___ By ____ Addition or ____ Revision Frequency Manual Update Req'd? Y___N___ By ____ Addition or ____ Revision Received FHWA Approval? Yes

FINAL DRAFT MINUTES

SPECIFICATION REVISIONS

REVISION TO THE STANDARD SPECIFICATIONS

PROPOSAL TO STANDARDS COMMITTEE

PROBLEM(S) ENCOUNTERED: The presence of "or as adjusted" in the specification is causing confusion and unnecessary disputes in the field.

PROPOSED SOLUTION: Since the Department already retains the right to adjust or propose adjustments for any item, this language is redundant. Proposal is to remove the language.

APPLICABLE STANDARD SPECIFICATIONS: 211.09, 213.08, & 216.11

APPLICABLE STANDARD DRAWINGS: None

APPLICABLE DESIGN MANUAL SECTION: None

APPLICABLE SECTION OF GIFE: None

APPLICABLE RECURRING SPECIAL PROVISIONS: None

Submitted By: Greg Pankow

Title: State Construction Engineer

Organization: INDOT

Phone Number: 317-232-5502

Date: September 17, 2010

APPLICABLE SUB-COMMITTEE ENDORSEMENT? A subcommittee wasn't consulted since the proposed change is minor and editorial in nature.

FINAL DRAFT MINUTES

REVISION TO THE STANDARD SPECIFICATIONS

SECTION 203 – EXCAVATION AND EMBANKMENT
203.27(a) CONTRACT QUANTITY (ADDED, SEE COMMENTS)

The Standard Specifications are revised as follows:

SECTION 203, LINE 930, DELETE AS FOLLOWS:

203.27 Method of Measurement

(a) Contract Quantity

The quantities of excavation for which payment will be made will be those shown in the Schedule of Pay Items for the pay items, provided the project is constructed to the lines and grades shown on the plans ~~or revised contract quantities as adjusted by authorized change~~.

FINAL DRAFT MINUTES

REVISION TO THE STANDARD SPECIFICATIONS

SECTION 211 – B BORROW AND STRUCTURE BACKFILL
211.09 METHOD OF MEASUREMENT
211.10 BASIS OF PAYMENT (ADDED, SEE COMMENTS)

The Standard Specifications are revised as follows:

SECTION 211, BEGIN LINE 173, DELETE AS FOLLOWS:

211.09 Method of Measurement

B borrow, structure backfill types 1, 2, or 3, and aggregate for end bent backfill will be measured by the cubic yard (cubic meter) as computed from the neat line limits shown on the plans~~, or as adjusted~~. If cubic yards (cubic meters) are set out as the pay item for B borrow or structure backfill in the Schedule of Pay Items and if neat line limits are not specified for measurement of volume for the material, measurement will be made by the cubic yard (cubic meter) at the loading point in truck beds which have been measured, stenciled, and approved. The B borrow may be weighed and converted to cubic yards (cubic meters) by assuming the weight per cubic foot (mass per cubic meter) to be 90% of the maximum wet density in accordance with AASHTO T 99. The material may be cross sectioned in its original position and again after excavation is complete, and the volume computed by the average end area method. If B borrow is used for backfill in areas where unsuitable material is present or peat excavation has been performed, unless otherwise directed, the B borrow will be cross sectioned, and the volume will be computed by the average end area method.

Structure backfill types 4 or 5 will be measured by the cubic yard (cubic meter) as computed from the neat line limits shown on the plans~~, or as adjusted~~. If neat line limits are not shown on the plans, the volume in cubic yards (cubic meters) of flowable backfill furnished and placed as structure backfill type 4 or 5 will be computed from the nominal volume of each batch and a count of the batches. Unused and wasted flowable backfill will be estimated and deducted.

SECTION 211, BEGIN LINE 218, DELETE AS FOLLOWS:

Aggregate for end bent backfill will be paid for at the contract unit price per cubic yard (cubic meter), based on the neat line limits shown on the plans ~~or as adjusted by authorized changes~~.

FINAL DRAFT MINUTES

REVISION TO THE STANDARD SPECIFICATIONS

SECTION 213 – FLOWABLE BACKFILL
213.08 METHOD OF MEASUREMENT
213.09 BASIS OF PAYMENT (ADDED, SEE COMMENTS)

The Standard Specifications are revised as follows:

SECTION 213 BEGIN LINE 152 DELETE AS FOLLOWS:

213.08 Method of Measurement

Flowable backfill will be measured by the cubic yard (cubic meter) of the type specified as computed from the neat line limits shown on the plans~~, or as adjusted~~. If neat line limits are not shown on the plans, the volume in cubic yards (cubic meters) of flowable backfill furnished and placed will be computed from the nominal volume of each batch and a count of the batches. Unused and wasted flowable backfill will be estimated and deducted. Drilled holes will be measured by the number of holes drilled.

213.09 Basis of Payment

The accepted quantities of flowable backfill will be paid for at the contract unit price per cubic yard (cubic meter) for the type specified, furnished and placed. Holes drilled in the pavement will be paid for at the contract unit price per each.

Payment will be made under:

Pay Item	**Pay Unit Symbol**
Drilled Hole for Flowable Backfill	EACH
Flowable Backfill, Non Removable	CYS (m3)
Flowable Backfill, Removable	CYS (m3)

The cost of material placed outside the neat line limits~~, material placed outside the adjusted limits,~~ and unused or wasted flowable backfill shall be included in the cost of this work.

FINAL DRAFT MINUTES

REVISION TO THE STANDARD SPECIFICATIONS

SECTION 216 – CELLULAR CONCRETE, CCF
216.11 METHOD OF MEASUREMENT

The Standard Specifications are revised as follows:

SECTION 216 BEGIN LINE 84, DELETE AS FOLLOWS:

216.11 Method of Measurement

CCF will be measured by the cubic yard (cubic meter) for each class as computed from the neat lines shown on the plans~~, or as adjusted~~.

FINAL DRAFT MINUTES

COMMENTS AND ACTION

203.27(A) CONTRACT QUANTITY
211.09 METHOD OF MEASUREMENT
211.10 BASIS OF PAYMENT
213.08 METHOD OF MEASUREMENT
213.09 BASIS OF PAYMENT
216.11 METHOD OF MEASUREMENT

DISCUSSION:
Introduced and presented by Mr. Pankow.
The words "as adjusted" only adds confusion.
Shows up also in 211.10. Would also like to strike that language from 211.10, Basis of Payment. Revised motion to strike it from 211 as well. All agreed.

Note: Similar statements were found in sections 203.27(a) and 213.09 and proposed changes are shown in these minutes as highlighted in yellow.

Motion: Mr. Pankow Second: Mr. Cales Ayes: 9 Nays: 0	Action: __X__ Passed as Submitted ____ Passed as Revised ____ Withdrawn
Standard Specifications Sections affected: 203.27 pg 159; 211.09 pg 197; 213.08 pg 203; 213.09, .10 pg 203; 216.11 pg 211. Recurring Special Provision affected: NONE Standard Sheets affected: NONE Design Manual Sections affected: NONE GIFE Sections cross-references: NONE	__X__ 2012 Standard Specifications Book ____ Revise Pay Item List ____ Create RSP (No.____) Effective ____Letting RSP Sunset Date: ____ ____ Revise RSP (No.____) Effective ____Letting RSP Sunset Date: ____ Standard Drawing Effective ____ ____ Create RPD (No. ____) Effective ____Letting ____ Technical Advisory GIFE Update Req'd.? Y ___ N ___ By ____ Addition or ____ Revision Frequency Manual Update Req'd? Y___N___ By ____ Addition or ____ Revision Received FHWA Approval? Yes

FINAL DRAFT MINUTES

SPECIFICATION REVISIONS

REVISION TO THE STANDARD DRAWINGS

PROPOSAL TO STANDARDS COMMITTEE

PROBLEM(S) ENCOUNTERED: There are no standard details for the section of concrete bridge-railing transition above the mudwall for the TBT, or truck-height, transition. The existing such standard details for the WBC or WBT, or common-height transitions, show a reinforcement pattern which does not match that in the main portion of the transition.

PROPOSED SOLUTION: Develop standard details for the mudwall portion of the TBT transition, and modify the existing details for the WBC and TBC transitions, so that the reinforcement pattern in the mudwall portion matches that in the main portion.

APPLICABLE STANDARD SPECIFICATIONS: None

APPLICABLE STANDARD DRAWINGS: Revise 706-CBRT-01 for WBC and TBC transitions; add new 706-CBRT-03 for TBT transition; change existing 706-CBRT-02 to -04 and 706-CBRT-03 to -02 for drawings-series-order logic.

APPLICABLE DESIGN MANUAL SECTION: 61-6.04

APPLICABLE SECTION OF GIFE: None known

Submitted By: Anne Rearick

Title: Director of Bridges

Organization: INDOT

Phone Number: 232-6775

Date: 9-22-10

FINAL DRAFT MINUTES

REVISION TO THE STANDARD DRAWINGS

706-CBRT-01 BRIDGE RAILING TRANSITION WBC *OR TBC* DETAILS AT END BENT (REVISED DRAFT)

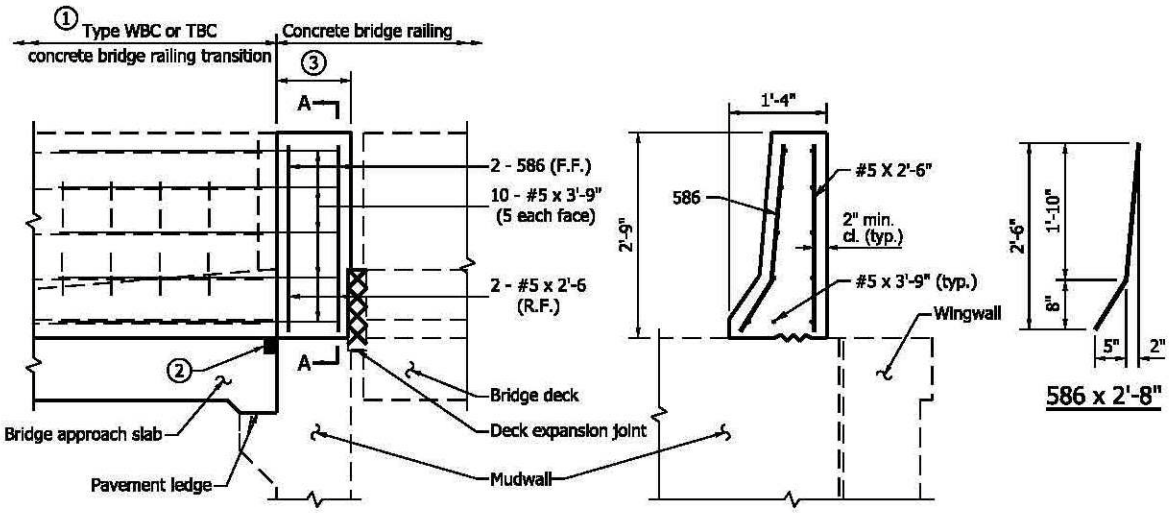

PART ELEVATION

SECTION A-A

NOTES:

① See Standard Drawings E 706-TWBC-01 through -03 for concrete bridge railing transition type WBC details. See Standard Drawing E 706-TTBC-01& -02 for concrete bridge railing transition type TBC details.

② See Standard Drawing E 724-BJTS-01 for type IA joint details.

③ This section of railing is part of the concrete bridge railing and shall be billed with the concrete railing on the bridge. The minimum length of this section shall be equal to the thickness of the mudwall, but the actual length of this section will depend on the position of the concrete bridge railing transition type WBC or TBC along the bridge approach slab, shall be as shown on the plans. See Standard Drawing E 706-BCBR-01 foroncrete bridge railing dimensions.

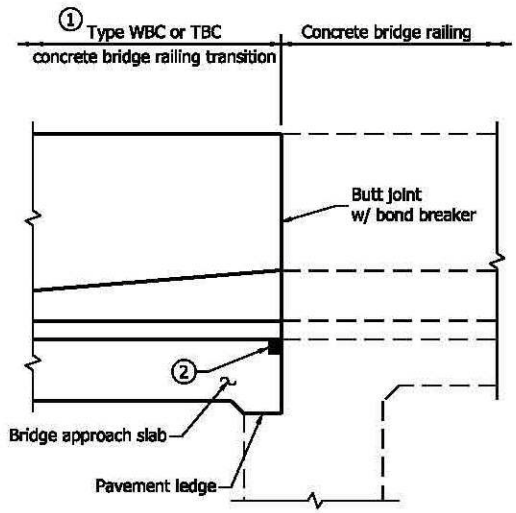

DETAIL AT INTEGRAL END BENT

INDIANA DEPARTMENT OF TRANSPORTATION

BRIDGE RAILING TRANSITION WBC OR TBC DETAILS AT END BENT

REVISION TO THE STANDARD DRAWINGS

706-CBRT-~~03~~02 BRIDGE RAILING TRANSITION WBC ATTACHMENT OF GUARDRAIL

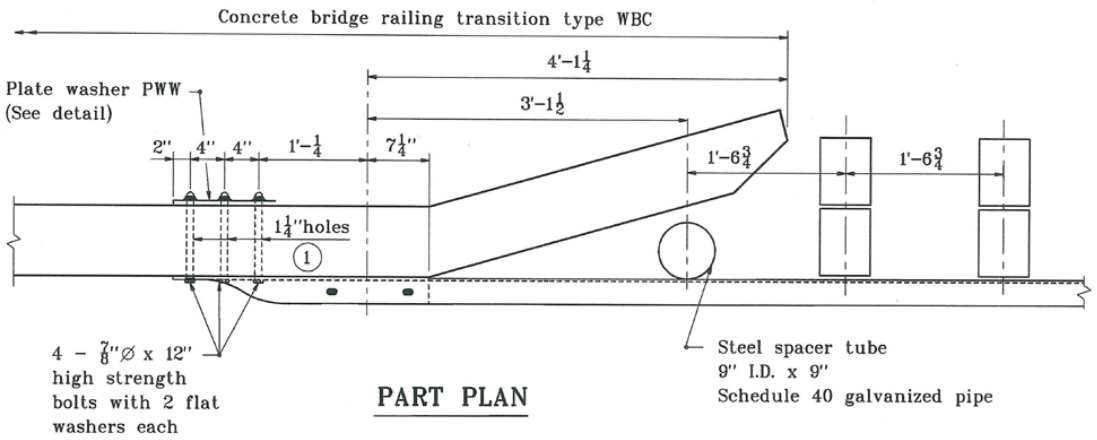

PART PLAN

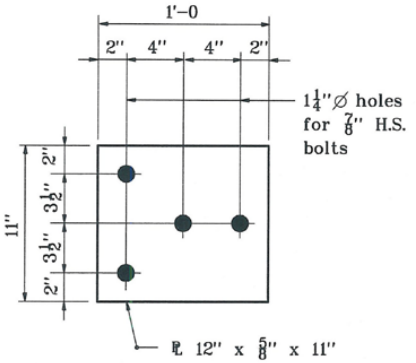

PLATE WASHER PWW

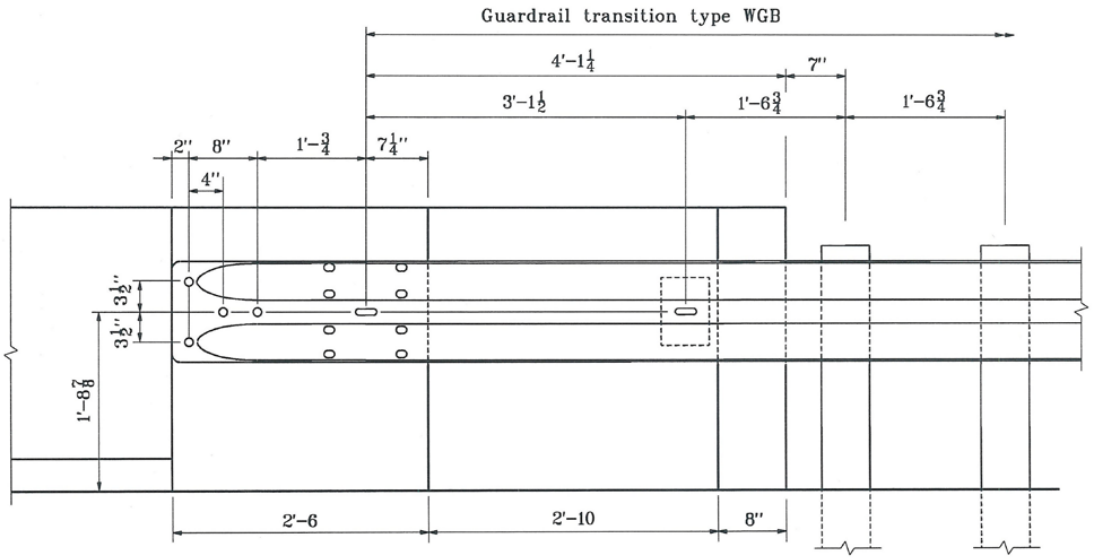

PART ELEVATION

NOTES :

1. These holes, required for the connection of the guardrail transition type WGB to the end of the concrete bridge railing transition, shall be preformed.

2. This drawing shall be used in conjuction with bridge railing transition type WBC as shown on Standard Drawing E 706-TWBC-01 and guardrail transition type WGB as shown on Standard Drawings E 601-TWGB-01 to -03.

INDIANA DEPARTMENT OF TRANSPORTATION

BRIDGE RAILING TRANSITION WBC ATTACHMENT OF GUARDRAIL

MAY 2000

STANDARD DRAWING NO. E 706-CBRT-~~03~~ -02

ANTHONY L. UREMOVICH REGISTERED No. 18095 STATE OF INDIANA PROFESSIONAL ENGINEER

DESIGN STANDARDS ENGINEER

/s/ Anthony L. Uremovich 5-01-00
DESIGN STANDARDS ENGINEER DATE

/s/ Firooz Zandi 5-01-00
CHIEF HIGHWAY ENGINEER DATE

REVISION TO THE STANDARD DRAWINGS

PROPOSED NEW DRAWING *706-CBRT-03 BRIDGE RAILING TRANSITION TBT DETAILS AT END BENT* (REVISED DRAFT)

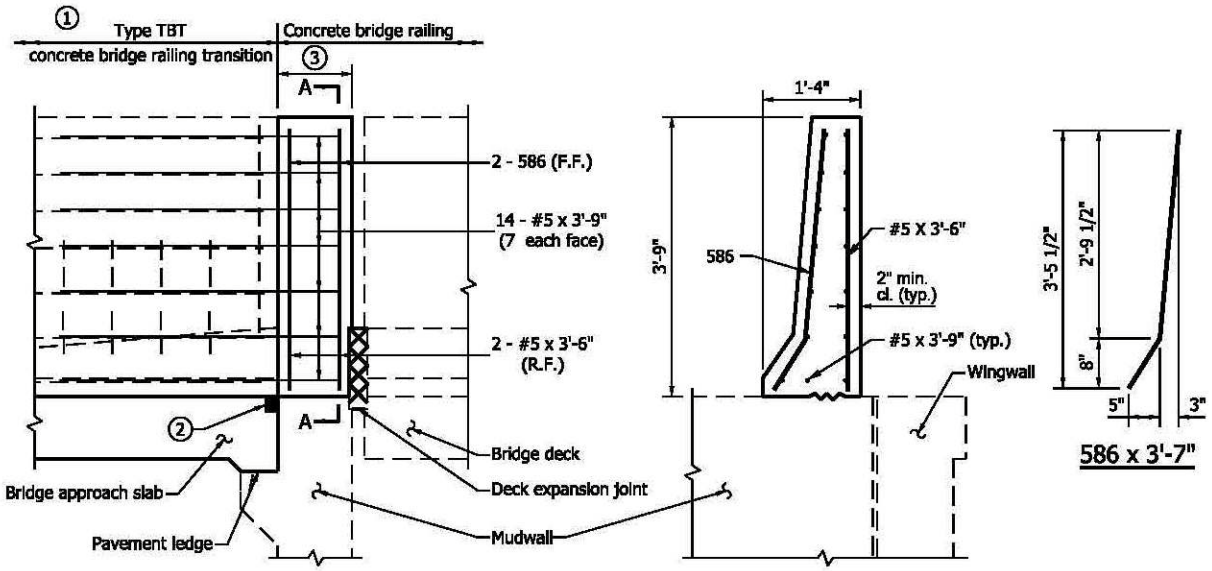

PART ELEVATION

SECTION A-A

586 x 3'-7"

NOTES:

① See Standard Drawings E 706-TTBT-01 through -03 for concrete bridge railing transition type TBT details.

② See Standard Drawing E 724-BJTS-01 for type IA joint details.

③ This section of railing is part of the concrete bridge railing and shall be billed with the concrete railing on the bridge. The minimum length of this section shall be equal to the thickness of the mudwall, but the actual length of this section will depend on the position of the concrete bridge railing transition type TBT along the bridge approach slab, shall be as shown on the plans. See Standard Drawing E 706-BCBR-01 foroncrete bridge railing dimensions.

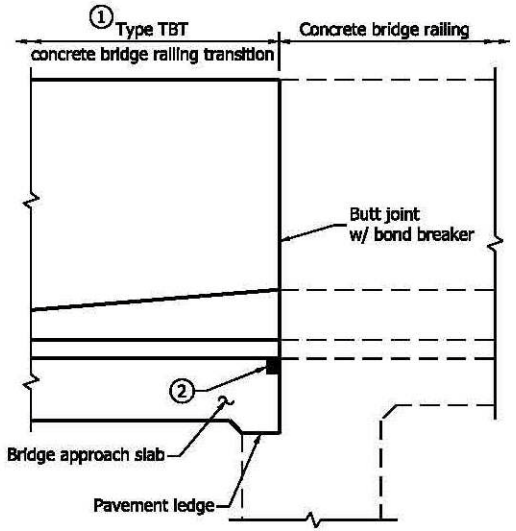

DETAIL AT INTEGRAL END BENT

INDIANA DEPARTMENT OF TRANSPORTATION

BRIDGE RAILING TRANSITION TBT
DETAILS AT END BENT

REVISION TO THE STANDARD DRAWINGS

706-CBRT-~~02~~*04* BRIDGE RAILING TRANSITION TBC OR TBT ATTACHMENT OF GUARDRAIL

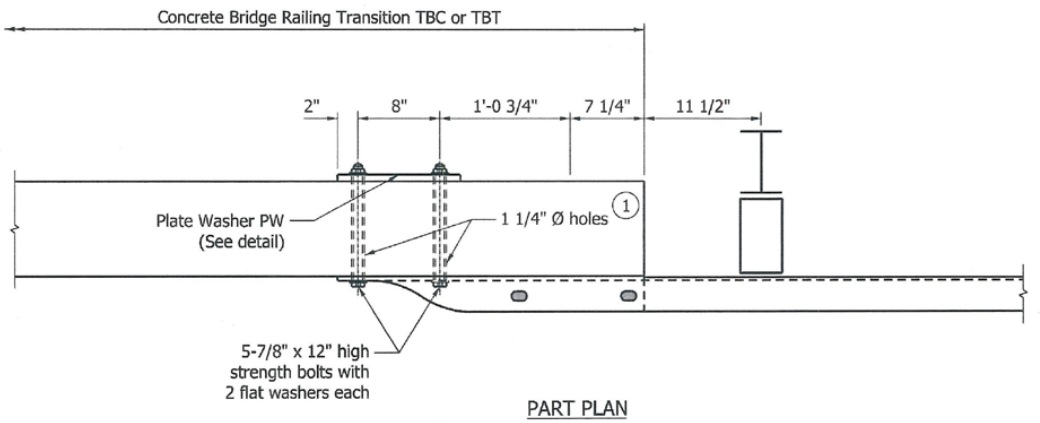

PART PLAN

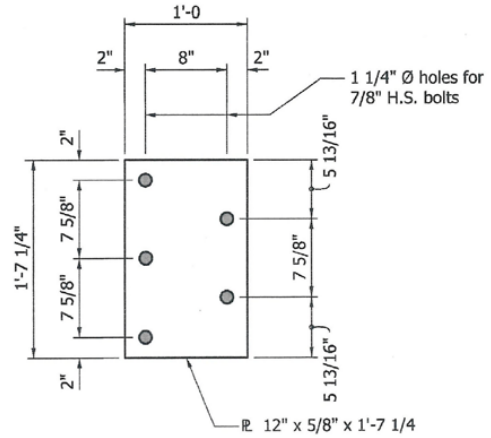

PLATE WASHER PW

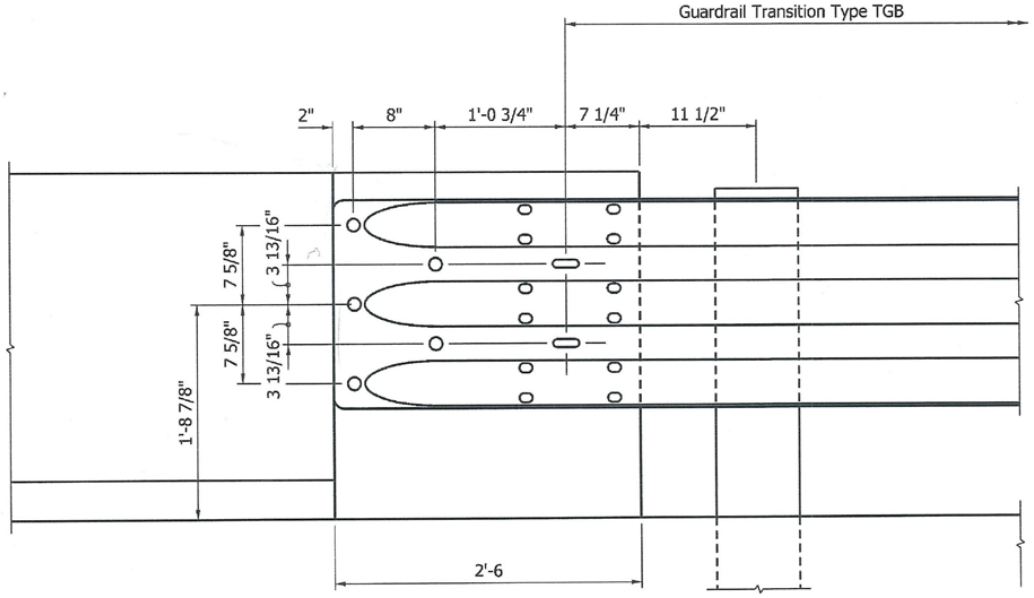

PART ELEVATION

NOTES:

1. These holes, required for the connection of the guardrail transition types TBC or TBT to the end of the concrete bridge railing transition, shall be preformed.
2. This drawing shall be used in conjunction with bridge railing transition type TBC as shown on Standard Drawing E 706-TTBC-01, or type TBTas shown on E 706-TTBT-01 and Guardrail transition type TGB as shown on Standard Drawing E 601-TTGB-01.

INDIANA DEPARTMENT OF TRANSPORTATION

BRIDGE RAILING TRANSITION TBC OR TBT ATTACHMENT OF GUARDRAIL

SEPTEMBER 2009

STANDARD DRAWING NO. E 706-CBRT-~~02~~ 04

RICHARD L. VanCLEAVE REGISTERED No. 9750 STATE OF INDIANA PROFESSIONAL ENGINEER

DESIGN STANDARDS ENGINEER

/s/ Richard L. VanCleave 09/01/09
DESIGN STANDARDS ENGINEER DATE

/s/ Mark A. Miller 09/01/09
CHIEF HIGHWAY ENGINEER DATE

COMMENTS AND ACTION

STANDARD DRAWINGS:
706-CBRT-01 BRIDGE RAILING TRANSITION WBC *OR TBC* DETAILS AT END BENT
706-CBRT-~~03~~ *02* BRIDGE RAILING TRANSITION WBC ATTACHMENT OF GUARDRAIL
706-CBRT-03 BRIDGE RAILING TRANSITION TBT DETAILS AT END BENT
706-CBRT-~~02~~*04* BRIDGE RAILING TRANSITION TBC OR TBT ATTACHMENT OF GUARDRAIL

DISCUTION:
Introduced and presented by Mr. Uremovich.
Need to make the diagram show the bar as vertical, not horizontal. (586)

A couple of revisions to be made to clarify details. This will be accomplished by Mr. Uremovich.

Motion revised to include drawing revisions.

Note: Revised proposed drawings are shown in these minutes.

Motion: Mr. Uremovich Second: Mr. Andrewski Ayes: 9 Nays: 0	Action: ____ Passed as Submitted __X__ Passed as Revised ____ Withdrawn
Standard Specifications Sections affected: NONE Recurring Special Provision affected: NONE Standard Sheets affected: 706-CBRT-01, -02, -03 Design Manual Sections affected: Section 61-6.04 GIFE Sections cross-references: NONE	____ 20__ Standard Specifications Book ____ Revise Pay Item List ____ Create RSP (No.____) Effective ____Letting RSP Sunset Date: ____ ____ Revise RSP (No.____) Effective ____Letting RSP Sunset Date: ____ Standard Drawing Effective Sept. 01, 2011 __X__ Create RPDs (No. 706-B-184d, -185d, -186d) Effective March 01, 2011 Letting __X__ Technical Advisory GIFE Update Req'd.? Y ___ N ___ By ____ Addition or ____ Revision Frequency Manual Update Req'd? Y___N___ By ____ Addition or ____ Revision Received FHWA Approval? Yes

FINAL DRAFT MINUTES

SPECIFICATION REVISIONS

REVISION TO THE SPECIAL PROVISIONS

PROPOSAL TO STANDARDS COMMITTEE

PROBLEM(S) ENCOUNTERED: The current Recurring Special Provision for Dynamic Cone Penetrometer (DCP) Testing requires revision based on additional testing with the DCP on several projects. The test section process should be revised to designate fewer test areas and all test methods should be included. Further clarification of the procedure using the DCP is also necessary.

PROPOSED SOLUTION: Revise the Recurring Special Provision to delete the density requirements and include the requirements for strength testing using the DCP. This Recurring Special Provision should replace the current Recurring Special Provision dated 4/16/09 using the DCP.

APPLICABLE STANDARD SPECIFICATIONS: 203.23 and 203.24

APPLICABLE STANDARD DRAWINGS: None

APPLICABLE DESIGN MANUAL SECTION: None

APPLICABLE SECTION OF GIFE: None

APPLICABLE RECURRING SPECIAL PROVISIONS: 203-R-562

Submitted By: Ron Walker

Title: Manager, Office of Materials Management

Organization: INDOT

Phone Number: 317-610-7251x204

Date: October 4, 2010

APPLICABLE SUB-COMMITTEE ENDORSEMENT? Office of Geotechnical Engineering

FINAL DRAFT MINUTES

REVISION TO THE RECURRING SPECIAL PROVISION

PROPOSED REVISION TO 203-R-562 DYNAMIC CONE PENETROMETER TESTING FOR EMBANKMENT

203-R-562 DYNAMIC CONE PENETROMETER TESTING FOR EMBANKMENT

(Adopted 04/16/09)

The Standard Specifications are revised as follows:

SECTION 203, BEGIN LINE 831, DELETE ~~AND INSERT~~ AS FOLLOWS:

203.23 Embankment Other Than Rock and Shale, With Density Control

~~Unless otherwise specified, all embankments shall be compacted to at least 95% of their maximum dry density. The moisture content shall be controlled within -2 and +1 percentage points of optimum moisture content. Maximum density and optimum moisture content shall *will* be determined in accordance with AASHTO T 99 using method A for soil and method C for granular materials. *In lieu of accepting compaction by density control, the Department may accept compaction based on the strength of the soil as determined by dynamic cone penetrometer testing, DCPT, in accordance with 203.23.1.*~~

~~SECTION 203, BEGIN LINE 868, INSERT AS FOLLOWS:~~

~~***203.23.1 Embankment Other Than Rock and Shale, With DCPT Control***~~

~~*In lieu of accepting compaction by density control in accordance with 203.23, the Department may accept compaction based on the strength of the soil as determined by dynamic cone penetrometer testing, DCPT, in accordance with ASTM D 6951.*~~

~~*The Department will establish criteria for DCPT acceptance of compaction by comparing density testing and DCPT results from test sections selected by the Engineer within the area of embankment construction.*~~

~~*The Department's Office of Geotechnical Engineering will be contacted prior to construction of test sections to determine the number of test sections required for the evaluation of the DCPT process, depending on the soils to be used in the embankment. Representative samples of the soils to be used in each test section will be obtained prior to construction of the test section for sieve analysis and proctor testing in accordance with AASHTO T 88 and AASHTO T 99.*~~

~~*Comparison tests will be made in test sections in each of 4 successive lifts of embankment placed in accordance with 203.23, except that moisture content in the test sections shall be controlled within -3 and +2 percentage points of optimum moisture content. The Engineer will select an area approximately 100 ft (33 m) long and 20 ft (6 m) wide within each lift for a test section. The test section in each successive lift will be approximately in the same horizontal location as the test section in the previous lift. The soil immediately below the test section in the first lift of embankment shall be proofrolled in accordance with 203.26 prior to construction of the lift.*~~

FINAL DRAFT MINUTES

REVISION TO THE RECURRING SPECIAL PROVISION

PROPOSED REVISION TO 203-R-562 DYNAMIC CONE PENETROMETER TESTING FOR EMBANKMENT (CONTINUED)

~~*In-situ density tests in accordance with 203.24 will be performed at 6 random locations per lift in each test section. Random test locations will be determined in accordance with ITM 802. DCPT will be performed within 1 ft (0.3 m) of each of the 6 in-situ density locations in each lift. The number of blows required for 6 in. (150 mm) penetration at each test location in each lift will be recorded and averaged to establish the 6 in. (150 mm) penetration minimum blow count criteria for the specific soil. Blow counts greater than 12 or less than 4 will be discarded and a new random test location will be selected in the test section in that lift. If all test section blow counts for 6 in. (150 mm) penetration are outside of the range of 12 to 4, the Office of Geotechnical Engineering will be contacted for determination of target range of blow counts.*~~

~~*For test sections below the Contractor's selected option for the specified subgrade treatment, each lift shall be compacted to at least 95% of its maximum dry density. If the Contractor elects to use density and moisture control as the option for subgrade construction, each lift in test sections within the subgrade treatment area shall be compacted to 100% of its maximum dry density.*~~

~~*Until DCPT blow count criteria is established, embankment compaction will be accepted by density control in accordance with 203.23.*~~

~~*Once DCPT blow count criteria is established, DCPT may be used for acceptance of the remaining embankment construction. Moisture content for embankment compaction accepted by DCPT shall be controlled within -3 and +2 percentage points of optimum moisture content.*~~

~~*The Department may also elect to calibrate a Campbell moisture probe during construction and testing of DCPT test sections. The Campbell moisture probe may then be used for moisture testing during construction of the remaining embankment or subgrade in lieu of moisture testing in accordance with ITM 506.*~~

SECTION 203, AFTER LINE 909, INSERT AS FOLLOWS:

203.24.1 Compaction Acceptance with DCPT

The compaction will be determined by dynamic cone penetrometer testing, DCPT, in accordance with ASTM D 6951 using a 17.6-lb (8-kg) hammer. The moisture content shall be controlled within -3 and +2 percentage points of the optimum moisture content determined in accordance with AASHTO T 99.

The Department will establish the criteria for DCPT acceptance of compaction by performing the sieve analysis, liquid limit, plastic limit, and optimum moisture and maximum density testing in accordance with AASHTO T 88, T 89, T 90, and T 99, respectively, on representative samples of the soils to be used. The required blow counts will be determined based on the laboratory tests for each soil type.

Test sections shall be constructed in the presence of a Geotechnical representative with the available equipment of the Contractor to determine the roller type, pattern, and the number

FINAL DRAFT MINUTES

REVISION TO THE RECURRING SPECIAL PROVISION

PROPOSED REVISION TO 203-R-562 DYNAMIC CONE PENETROMETER TESTING FOR EMBANKMENT (CONTINUED)

of passes for verification of the blow counts for a 6 in. (150 mm) lift. The Office of Geotechnical Engineering will be contacted prior to construction of the test sections to determine the number of test sections required for the evaluation of the DCPT process. The embankment shall be constructed in two 6 in. (150 mm) successive lifts placed in accordance with 203.23. The Engineer will select an area approximately 100 ft (30 m) long and 20 ft (6 m) wide within each lift for a test section. The test section in the second lift will be approximately in the same location as the test section in the first lift. The soil immediately below the test section in the first lift shall be proofrolled in accordance with 203.26 prior to construction of the lift.

Moisture tests will be performed in accordance with ITM 506 at two random locations and DCPT will be performed at four random locations in each lift. The locations will be determined in accordance with ITM 802. The moisture content shall be controlled within -3 and +2 percentage points of the optimum moisture content. Blow counts greater than 10 or less than 4 will be discarded and a new random test location will be selected in the test section in that lift. If all of the test section blow counts are outside of the range of 10 to 4, the Office of Geotechnical Engineering will be contacted for determination of the target blow counts.

FINAL DRAFT MINUTES

REVISION TO THE RECURRING SPECIAL PROVISION

BACKUP NO.1 REVISED RECURRING SPECIAL PROVISION 203-R-562 DYNAMIC CONE PENETROMETER TESTING FOR EMBANKMENT (PROPOSED FINAL DRAFT)

203-R-562 DYNAMIC CONE PENETROMETER TESTING FOR EMBANKMENT

(Revised 10/21/10)

The Standard Specifications are revised as follows:

SECTION 203, BEGIN LINE 831, DELETE AS FOLLOWS:

203.23 Embankment Other Than Rock and Shale, With Density Control

~~Unless otherwise specified, all embankments shall be compacted to at least 95% of their maximum dry density. The moisture content shall be controlled within -2 and +1 percentage points of optimum moisture content. Maximum density and optimum moisture content shall be determined in accordance with AASHTO T 99 using method A for soil and method C for granular materials.~~

SECTION 203, AFTER LINE 909, INSERT AS FOLLOWS:

203.24.1 Compaction Acceptance with DCPT

The compaction will be determined by dynamic cone penetrometer testing, DCPT, in accordance with ASTM D 6951 using a 17.6-lb (8-kg) hammer. The moisture content shall be controlled within -3 and +2 percentage points of the optimum moisture content determined in accordance with AASHTO T 99.

The Department will establish the criteria for DCPT acceptance of compaction by performing the sieve analysis, liquid limit, plastic limit, and optimum moisture and maximum density testing in accordance with AASHTO T 88, T 89, T 90, and T 99, respectively, on representative samples of the soils to be used. The required blow counts will be determined based on the laboratory tests for each soil type.

Test sections shall be constructed in the presence of a Geotechnical representative with the available equipment of the Contractor to determine the roller type, pattern, and the number of passes for verification of the blow counts for a 6 in. (150 mm) lift. The Office of Geotechnical Engineering will be contacted prior to construction of the test sections to determine the number of test sections required for the evaluation of the DCPT process. The embankment shall be constructed in two 6 in. (150 mm) successive lifts placed in accordance with 203.23. The Engineer will select an area approximately 100 ft (30 m) long and 20 ft (6 m) wide within each lift for a test section. The test section in the second lift will be approximately in the same location as the test section in the first lift. The soil immediately below the test section in the first lift shall be proofrolled in accordance with 203.26 prior to construction of the lift.

Moisture tests will be performed in accordance with ITM 506 at two random locations and DCPT will be performed at four random locations in each lift. The locations will be determined in accordance with ITM 802. The moisture content shall be controlled within -3 and +2 percentage points of the optimum moisture content. Blow counts greater than 10 or less than 4 will be discarded and a new random test location will be selected in the test section in that lift. If all of the test section blow counts are outside of the range of 10 to 4, the Office of Geotechnical Engineering will be contacted for determination of the target blow counts.

FINAL DRAFT MINUTES

COMMENTS AND ACTION

REVISION TO THE RECURRING SPECIAL PROVISION
203-R-562 DYNAMIC CONE PENETROMETER TESTING FOR EMBANKMENT

DISCUSSION:
Introduced and presented by Mr. Walker with additional information from Mr. Siddiki. This method has been used for the past 4 – 5 years.

Goal is to convert to DCPT and eliminate nuclear gauges.
LWD (Light Weight Deflectometer) can be used for granular soils, and will be presented at the next Standards meeting.

We go through a lot of tips which are produced by Purdue rather inexpensively.

Motion: Mr. Walker Second: Mr. Keefer Ayes: 9 Nays: 0	Action: __X__ Passed as Submitted ____ Passed as Revised ____ Withdrawn
Standard Specifications Sections affected: 203.23 pg 156; 203.24 pg 158. Recurring Special Provision affected: 203-R-562 DYNAMIC CONE PENETROMETER TESTING FOR EMBANKMENT Standard Sheets affected: NONE Design Manual Sections affected: NONE GIFE Sections cross-references: NONE	____ 20__ Standard Specifications Book ____ Revise Pay Item List ____ Create RSP (No.) Effective ____Letting RSP Sunset Date: ____ __X__ Revise RSP (No.203-R-562) Effective January 01, 2011 Letting RSP Sunset Date: ____ Standard Drawing Effective ____ ____ Create RPD (No. ____) Effective ____Letting ____ Technical Advisory GIFE Update Req'd.? Y ___ N ___ By ____ Addition or ____ Revision Frequency Manual Update Req'd? Y__N__ By ____ Addition or ____ Revision Received FHWA Approval? Yes

FINAL DRAFT MINUTES

Mr. Walker
Date: 10/21/10

SPECIFICATION REVISIONS

REVISION TO THE STANDARD SPECIFICATIONS

PROPOSAL TO STANDARDS COMMITTEE

PROBLEM(S) ENCOUNTERED: Section 904.06 (c) requires a size of sample of 4000 to 6000 grams for the 1 1/2 in. and 2 in. Structure Backfill size aggregates which is too small of a sample for the size of material. Also, there is no need for a reference to Subbase in the table because the required No. 8 and No. 53 size aggregates for Subbase are already referenced in the table.

PROPOSED SOLUTION: A revision to 904.06 is required to increase the sample size of 1 1/2 in. and 2 in. structure backfill material.

APPLICABLE STANDARD SPECIFICATIONS: 904.06

APPLICABLE STANDARD DRAWINGS: None

APPLICABLE DESIGN MANUAL SECTION: None

APPLICABLE SECTION OF GIFE: None

APPLICABLE RECURRING SPECIAL PROVISIONS: None

Submitted By: Ron Walker

Title: Manager, Office of Materials Management

Organization: INDOT

Phone Number: 317-610-7251x204

Date: October 4, 2010

APPLICABLE SUB-COMMITTEE ENDORSEMENT?
Revisions recommended by the INDOT/IMAA Technical Committee.

FINAL DRAFT MINUTES

REVISION TO THE STANDARD SPECIFICATIONS

SECTION 904-AGGREGATES
904.06(C) EXCEPTIONS TO AASHTO T 27 FOR COARSE AGGREGATES

The Standard Specifications are revised as follows:

SECTION 904, BEGIN LINE 345, DELETE AND INSERT AS FOLLOWS:

(c) Exceptions to AASHTO T 27 for Coarse Aggregates

The size of test samples for coarse aggregate shall be as follows:

Aggregate Size	**Minimum Weight (Mass) of Test Sample**
No. 2	25 lb (11.3 kg)
No 5, 8, 43, 53, 73, and 91	13-18 lb (6-8 kg)
No. 9	9-13 lb (4-6 kg)
~~*Structure Backfill~~	~~9-13 lb (4-6 kg)~~
2 in. (50 mm)	*25 lb (11.3 kg)*
1 1/2 in. (37.5 mm) and 1 in. (25.0 mm)	*13-18 lb (6-8 kg)*
1/2 in. (12.5 mm)	*9-13 lb (4-6 kg)*
No. 4 (4.75 mm) and No. 30 (600 µm)	*10 oz (300 g)*
~~*Subbase~~	~~9-13 lb (4-6 kg)~~

~~* The minimum weight (mass) of the test sample for No. 4 (4.75 mm) and No. 30 (600 µm) structure backfill shall be 10 oz (300 grams).~~

FINAL DRAFT MINUTES

COMMENTS AND ACTION

904.06(C) EXCEPTIONS TO AASHTO T 27 FOR COARSE AGGREGATES

DISCUSSION:
Introduced and presented by Mr. Walker.

Discussion? None.

Motion: Mr. Walker Second: Mr. Andrewski Ayes: 9 Nays: 0	Action: X Passed as Submitted ____ Passed as Revised ____ Withdrawn
Standard Specifications Sections affected: 904.06 pg 780. Recurring Special Provision affected: NONE Standard Sheets affected: NONE Design Manual Sections affected: NONE GIFE Sections cross-references: NONE	X 2012 Standard Specifications Book ____ Revise Pay Item List ____ Create RSP (No.____) Effective ____Letting RSP Sunset Date: ____ ____ Revise RSP (No.____) Effective ____Letting RSP Sunset Date: ____ Standard Drawing Effective ____ ____ Create RPD (No. ____) Effective ____Letting ____ Technical Advisory GIFE Update Req'd.? Y ___ N ___ By ____ Addition or ____ Revision Frequency Manual Update Req'd? Y___N___ By ____ Addition or ____ Revision Received FHWA Approval? Yes

FINAL DRAFT MINUTES

Mr. Walker
Date: 10/21/10

SPECIFICATION REVISIONS

REVISION TO THE STANDARD SPECIFICATIONS

PROPOSAL TO STANDARDS COMMITTEE

PROBLEM(S) ENCOUNTERED: Section 400 requires that the maximum specific gravity of HMA be determined in accordance with AASHTO T 209, Section 9.5.1. The purpose of this designation is to require the mass determination in water procedure rather than the alternate procedure of the mass determined in air. The 2010 AASHTO Methods of Sampling and Testing Specifications has revised AASHTO T 209 and changed the test section designations. Reference to the generic term "Mass Determination in Water" is required.

PROPOSED SOLUTION: Revise the appropriate 400 sections to reference the mass determined in water procedure and remove the reference to section 9.5.1.

APPLICABLE STANDARD SPECIFICATIONS: 401.05, 401.09, 401.16, 401.20, 402.16, 410.05, 410.09, and 410.16

APPLICABLE STANDARD DRAWINGS: None

APPLICABLE DESIGN MANUAL SECTION: None

APPLICABLE SECTION OF GIFE: None

APPLICABLE RECURRING SPECIAL PROVISIONS: None

Submitted By: Ron Walker

Title: Manager, Office of Materials Management

Organization: INDOT

Phone Number: 317-610-7251x204

Date: October 4, 2010

APPLICABLE SUB-COMMITTEE ENDORSEMENT? None.

FINAL DRAFT MINUTES

REVISION TO THE STANDARD SPECIFICATIONS

SECTION 401 – QUALITY CONTROL/ QUALITY ASSURANCE, QC/QA, HOT MIX ASPHALT, HMA, PAVEMENT
401.05 VOLUMETRIC MIX DESIGN
401.09 ACCEPTANCE OF MIXTURES
401.16 DENSITY
401.20(a) MSG

The Standard Specifications are revised as follows:

SECTION 401, BEGIN LINE 71, DELETE AND INSERT AS FOLLOWS:
may be used for open graded mixtures. The maximum specific gravity ~~of the uncompacted mixture~~ shall be *mass* determined *in water* in accordance with AASHTO T 209~~, Section 9.5.1~~.

SECTION 401, BEGIN LINE 180, DELETE AND INSERT AS FOLLOWS:
The binder content will be determined in accordance with ITM 586 or ITM 571 as directed by the Engineer. The maximum specific gravity will be *mass* determined *in water* in accordance with AASHTO T 209~~, Section 9.5.1~~.

SECTION 401, BEGIN LINE 392, DELETE AND INSERT AS FOLLOWS:
AASHTO T 166, Method A. The maximum specific gravity will be *mass* determined *in water* in accordance with AASHTO T 209~~, Section 9.5.1~~.

SECTION 401, BEGIN LINE 638, DELETE AND INSERT AS FOLLOWS:
(a) MSG
The backup MSG ~~sample~~ will be dried in accordance with ITM 572 and ~~tested~~ *mass determined in water* in accordance with AASHTO T 209~~, Section 9.5.1~~.

FINAL DRAFT MINUTES

REVISION TO THE STANDARD SPECIFICATIONS

SECTION 402 – HOT MIX ASPHALT, HMA, PAVEMENT
402.16 LOW TEMPERATURE COMPACTION REQUIREMENTS

The Standard Specifications are revised as follows:

SECTION 402, BEGIN LINE 351, DELETE AND INSERT AS FOLLOWS:

The Engineer will determine the bulk specific gravity of the cores in accordance with AASHTO T 166 Method A. The maximum specific gravity will be *mass* determined *in water* in accordance with AASHTO T 209~~, Section 9.5.1~~.

FINAL DRAFT MINUTES

REVISION TO THE STANDARD SPECIFICATIONS

SECTION 410 – QUALITY CONTROL/QUALITY ASSURANCE, QC/QA, HMA SURFACE – SMA PAVEMENT
410.05 SMA MIX DESIGN
410.09 ACCEPTANCE OF MIXTURES
410.16 DENSITY
410.20(a) MSG

The Standard Specifications are revised as follows:

SECTION 410, BEGIN LINE 54, DELETE AND INSERT AS FOLLOWS:

The optimum binder and aggregate gradation content shall produce 4.0% air voids. The maximum specific gravity ~~of the uncompacted mixture~~ shall be *mass* determined *in water* in accordance with AASHTO T 209~~, Section 9.5.1~~. The percent draindown for SMA surface mixture shall not exceed 0.30% in accordance with AASHTO T 305.

SECTION 410, BEGIN LINE 143, DELETE AND INSERT AS FOLLOWS:

T 30. The maximum specific gravity will be *mass* determined *in water* in accordance with AASHTO T 209~~, Section 9.5.1~~.

SECTION 410, BEGIN LINE 313, DELETE AND INSERT AS FOLLOWS:

The Engineer will determine the BSG of the cores in accordance with AASHTO T 166, Method A. The maximum specific gravity will be *mass* determined *in water* in accordance with AASHTO T 209~~, Section 9.5.1~~. The target value for density of SMA mixtures of each sublot shall be 93.0%.

The Engineer will determine the bulk specific gravity of the cores in accordance with AASHTO T 166, Method A. The maximum specific gravity will be *mass* determined *in water* in accordance with AASHTO T 209~~, Section 9.5.1~~. Density shall not be less than 92.0%.

SECTION 410, BEGIN LINE 422, DELETE AND INSERT AS FOLLOWS:

(a) MSG

The backup ~~maximum specific gravity~~ *MSG* ~~sample~~ will be dried in accordance with ITM 572 and ~~tested~~ *mass determined in water* in accordance with AASHTO T 209~~, section 9.5.1~~.

FINAL DRAFT MINUTES

COMMENTS AND ACTION

401.05 VOLUMETRIC MIX DESIGN
401.09 ACCEPTANCE OF MIXTURES
401.16 DENSITY
401.20(a) MSG
402.16 LOW TEMPERATURE COMPACTION REQUIREMENTS
410.05 SMA MIX DESIGN
410.09 ACCEPTANCE OF MIXTURES
410.16 DENSITY
410.20(a) MSG

Introduced and presented by Mr. Walker.
Revised each affected section to say *"mass determined in water"*.

Current contracts will have the incorrect reference.

Motion: Mr. Walker Second: Mr. Andrewski Ayes: 9 Nays: 0	Action: _X_ Passed as Submitted ____ Passed as Revised ____ Withdrawn
Standard Specifications Sections affected: 401.05 pg 232; 401.09 pg 235; 401.16 pg 240; 401.20 pg 248; 402.16 pg 258; 410.05 pg 276; 410.09 pg 278; 410.16 pg 282; 410.20 pg 286. Recurring Special Provision affected: NONE Standard Sheets affected: NONE Design Manual Sections affected: NONE GIFE Sections cross-references: NONE	_X_ 2012 Standard Specifications Book ____ Revise Pay Item List ____ Create RSP (No.____) Effective ____Letting RSP Sunset Date: ____ _X_ Revise RSP (No.400-R-553) Effective January 01, 2011 Letting RSP Sunset Date: ____ Standard Drawing Effective ____ ____ Create RPD (No. ____) Effective ____Letting ____ Technical Advisory GIFE Update Req'd.? Y ___ N ___ By ____ Addition or ____ Revision Frequency Manual Update Req'd? Y___N___ By ____ Addition or ____ Revision Received FHWA Approval? Yes

FINAL DRAFT MINUTES