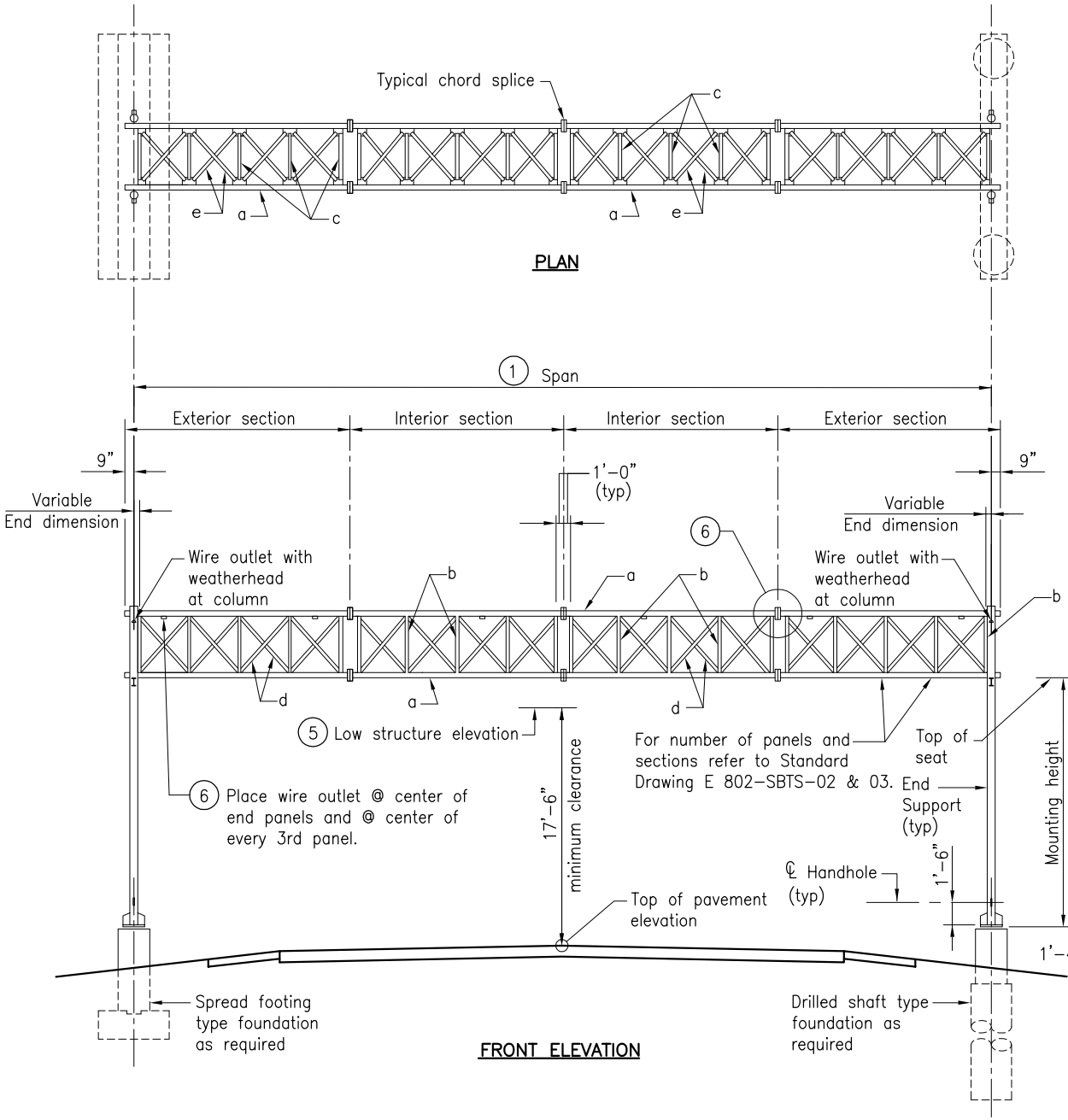

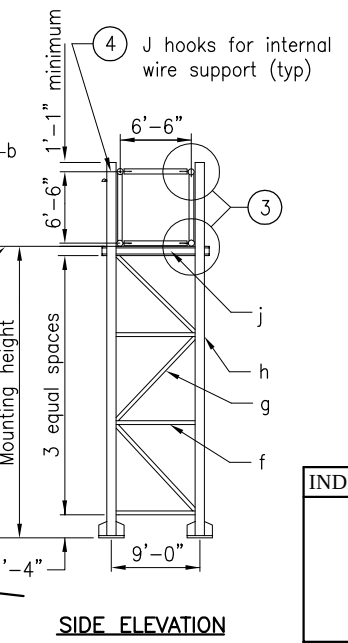

NOTES:

1. Sign box truss structures are for various maximum sign areas and span lengths. See Standard Drawings E 802-SBTS-02 thru 04 for structure schedule including dimensions and member sizes.
2. Maximum deviation of any chord from a straight line in any section shall be less than 1/8". Max. horizontal deviation over the entire length of the box truss shall be less than 3/8" from a straight line.
3. See Standard Drawings E 802-SBTS-05, 06, 09 and 10 for truss connection details.
4. See Standard Drawing E 802-SBTS-08 and 12 for end support details.
5. See Standard Drawing E 802-SNWW-01 through 03 for sign support and placement details.
6. See Standard Drawing E 802-SBTS-07 for chord flange and wire outlet details.

LEGEND:

- a – Chord
- b – Verticals in front and back faces of box truss
- c – Horizontals in top and bottom faces of box truss
- d – Diagonals in front and back faces of box truss
- e – Diagonals in top and bottom faces of box truss
- f – Horizontals in End Supports
- g – Diagonals in End Supports
- h – End Support columns
- j – Horizontal W-beam in End Support

INDIANA DEPARTMENT OF TRANSPORTATION

SIGN BOX TRUSS STRUCTURE PLAN AND ELEVATION

DECEMBER 2008

DRAWING NO. E 802-SBTS-01

JOHN C. MAUSER REGISTERED No. 17361 STATE OF INDIANA PROFESSIONAL ENGINEER

John C. Mauser 07/18/08
DESIGN ENGINEER DATE

DESIGNED: JCM DRAWN:

802-T-172d 1 of 19

04-01-09

DIMENSIONS FOR SIGN BOX TRUSSES (34' thru 85')

SPAN	EXTERIOR SECTIONS					INTERIOR SECTIONS			
SPAN-TRUSS LENGTH, (FT)	NO. OF SECTIONS	NO. OF PANELS PER SECTION	VARIABLE END DIMEN.	PANEL LENGTH	SECTION LENGTH	NO. OF SECTIONS	NO. OF PANELS PER SECTION	PANEL LENGTH	SECTION LENGTH
34	1	6	6"	5'-6"	35'-6"	0			
35	1	6	6"	5'-8"	36'-6"	0			
36	2	3	6"	5'-6"	18'-9"	0			
37	2	3	6"	5'-8"	19'-3"	0			
38	2	3	6"	5'-10"	19'-9"	0			
39	2	3	6"	6'	20'-3"	0			
40	2	3	6"	6'-2"	20'-9"	0			
41	2	3	6"	6'-4"	21'-3"	0			
42	2	3	6"	6'-6"	21'-9"	0			
43	2	4	6"	5'	22'-3"	0			
44	2	4	6"	5'-1 1/2"	22'-9"	0			
45	2	4	6"	5'-3"	23'-3"	0			
46	2	4	6"	5'-4 1/2"	23'-9"	0			
47	2	4	6"	5'-6"	24'-3"	0			
48	2	4	6"	5'-7 1/2"	24'-9"	0			
49	2	4	6"	5'-9"	25'-3"	0			
50	2	4	6"	5'-10 1/2"	25'-9"	0			
51	2	4	6"	6'	26'-3"	0			
52	2	4	6"	6'-1 1/2"	26'-9"	0			
53	2	4	6"	6'-3"	27'-3"	0			
54	2	4	6"	6'-4 1/2"	27'-9"	0			
55	2	4	6"	6'-6"	28'-3"	0			
56	2	5	5 1/4"	5'-3 3/4"	28'-9"	0			
57	2	5	6 1/4"	5'-4 3/4"	29'-3"	0			
58	2	5	6"	5'-6"	29'-9"	0			
59	2	5	5 3/4"	5'-7 1/4"	30'-3"	0			
60	2	5	5 1/2"	5'- 8 1/2"	30'-9"	0			
61	2	5	6 1/2"	5'-9 1/2"	31'-3"	0			
62	2	5	6 1/4"	5'-10 3/4"	31'-9"	0			
63	2	5	6"	6'	32'-3"	0			
64	2	5	5 3/4"	6'-1 1/4"	32'-9"	0			
65	2	5	5 1/2"	6'-2 1/2"	33'-3"	0			
66	2	5	5 1/4"	6'-3 3/4"	33'-9"	0			
67	2	5	5"	6'-5"	34'-3"	0			
68	2	5	6"	6'-6"	34'-9"	0			
69	2	4	6"	5'-4"	23'-7"	1	4	5'-4"	23'-4"
70	2	4	6"	5'-5"	23'-11"	1	4	5'-5"	23'-8"
71	2	4	6"	5'-6"	24'-3"	1	4	5'-6"	24'
72	2	4	6"	5'-7"	24'-7"	1	4	5'-7"	24'-4"
73	2	4	6"	5'-8"	24'-11"	1	4	5'-8"	24'-8"
74	2	4	6"	5"-9"	25'-3"	1	4	5"-9"	25'
75	2	4	6"	5'-10"	25'-7"	1	4	5'-10"	25'-4"
76	2	4	6"	5'-11"	25'-11"	1	4	5'-11"	25'-8"
77	2	4	6"	6'	26'-3"	1	4	6'	26'
78	2	4	6"	6'-1 "	26'-7"	1	4	6'-1 "	26'-4"
79	2	4	6"	6'-2"	26'-11"	1	4	6'-2"	26'-8"
80	2	4	6"	6'-3"	27'-3"	1	4	6'-3"	27'
81	2	4	6"	6'-4"	27'-7"	1	4	6'-4"	27'-4"
82	2	4	6"	6'-5"	27'-11"	1	4	6'-5"	27'-8"
83	2	4	6"	6'-6"	28'-3"	1	4	6'-6"	28'
84	2	5	5 3/4"	5'-7 3/4"	30'-5 1/2"	1	4	5'-7 3/4"	24'-7"
85	2	5	6 1/2"	5'-8 1/2"	30'-10"	1	4	5'-8 1/2"	24'-10"

NOTES:

1. All panels on a truss shall be the same length. The minimum panel length is 5'-0" and the maximum is 6'-6".
2. A single interior unit shall have an even number of panels to maintain the pattern of the vertical diagonals.
3. Use minimum number of sections for each truss. Keep the maximum section length at 35'-6".
4. See Standard Drawing E 802-SBTS-03 for required camber.

INDIANA DEPARTMENT OF TRANSPORTATION

SIGN BOX TRUSS STRUCTURE
TABLE OF DIMENSIONS
SPANS 34' thru 85'

DECEMBER 2008

DRAWING NO. E 802-SBTS-02

JOHN C. MAUSER REGISTERED No. 17361 STATE OF INDIANA PROFESSIONAL ENGINEER

John C. Mauser 07/18/08
DESIGN ENGINEER DATE

DESIGNED: JCM DRAWN:

04-01-09

802-T-172d 2 of 19

DIMENSIONS FOR SIGN BOX TRUSSES (86' thru 130')

SPAN	EXTERIOR SECTIONS					INTERIOR SECTIONS			
SPAN-TRUSS LENGTH, (FT)	NO. OF SECTIONS	NO. OF PANELS PER SECTION	VARIABLE END DIMEN.	PANEL LENGTH	SECTION LENGTH	NO. OF SECTIONS	NO. OF PANELS PER SECTION	PANEL LENGTH	SECTION LENGTH
86	2	5	5 1/2"	5'-9 1/2"	31'-2"	1	4	5'-9 1/2"	25'-2"
87	2	5	6 1/4"	5'-10 1/4"	31'-6 1/2"	1	4	5'-10 1/4"	25'-5"
88	2	5	7"	5'-11"	31'-11"	1	4	5'-11"	25'-8"
89	2	5	6"	6'	32'-3"	1	4	6'	26'
90	2	5	5"	6'-1"	32'-7"	1	4	6'-1"	26'-4"
91	2	5	5 3/4"	6'-1 3/4"	32'-11 1/2"	1	4	6'-1 3/4"	26'-7"
92	2	5	6 1/2"	6'-2 1/2"	33'-4"	1	4	6'-2 1/2"	26'-10"
93	2	5	5 1/2"	6'-3 1/2"	33'-8"	1	4	6'-3 1/2"	27'-2"
94	2	5	6 1/4"	6'-4 1/4"	34'-1/2"	1	4	6'-4 1/4"	27'-5"
95	2	5	5 1/4"	6'-5 1/4"	34'-4 1/2"	1	4	6'-5 1/4"	27'-9"
96	2	5	6"	6'-6"	34'-9"	1	4	6'-6"	28'
97	2	4	6"	5'-7 1/2"	24'-9"	2	4	5'-7 1/2"	24'-6"
98	2	4	6"	5'-8 1/4"	25'	2	4	5'-8 1/4"	24'-9"
99	2	4	6"	5'-9"	25'-3"	2	4	5'-9"	25'
100	2	4	6"	5'-9 3/4"	25'-6"	2	4	5'-9 3/4"	25'-3"
101	2	4	6"	5'-10 1/2"	25'-9"	2	4	5'-10 1/2"	25'-6"
102	2	4	6"	5'-11 1/4"	26'	2	4	5'-11 1/4"	25'-9"
103	2	4	6"	6'	26'-3"	2	4	6'	26'
104	2	4	6"	6'-3/4"	26'-6"	2	4	6'-3/4"	26'-3"
105	2	4	6"	6'-1 1/2"	26'-9"	2	4	6'-1 1/2"	26'-6"
106	2	4	6"	6'-2 1/4"	27'	2	4	6'-2 1/4"	26'-9"
107	2	4	6"	6'-3"	27'-3"	2	4	6'-3"	27'
108	2	4	6"	6'-3 3/4"	27'-6"	2	4	6'-3 3/4"	27'-3"
109	2	4	6"	6'-4 1/2"	27'-9"	2	4	6'-4 1/2"	27'-6"
110	2	4	6"	6'-5 1/4"	28'	2	4	6'-5 1/4"	27'-9"
111	2	4	6"	6'-6"	28'-3"	2	4	6'-6"	28'
112	2	5	6"	5'-3"	28'-6"	2	5	5'-3"	28'-3"
113	2	5	7"	5'-3 1/2"	28'-9 1/2"	2	5	5'-3 1/2"	28'-5 1/2"
114	2	5	5 1/2"	5'-4 1/4"	28'-11 3/4"	2	5	5'-4 1/4"	28'-9 1/4"
115	2	5	6 1/2"	5'-4 3/4"	29'-3 1/4"	2	5	5'-4 3/4"	28'-11 3/4"
116	2	5	5"	5'-5 1/2"	29'-5 1/2"	2	5	5'-5 1/2"	29'-3 1/2"
117	2	5	6"	5'-6"	29'-9"	2	5	5'-6"	29'-6"
118	2	5	5"	5'-6 1/2"	29'-10 1/2"	2	5	5'-6 1/2"	29'-8 1/2"
119	2	5	5 1/2"	5'-7 1/4"	30'-2 3/4"	2	5	5'-7 1/4"	30'-1/4"
120	2	5	6 1/2"	5'-7 3/4"	30'-6 1/4"	2	5	5'-7 3/4"	30'-2 3/4"
121	2	5	5"	5'-8 1/2"	30'-8 1/2"	2	5	5'-8 1/2"	30'-6 1/2"
122	2	5	6"	5'-9"	31'	2	5	5'-9"	30'-9"
123	2	5	7"	5'-9 1/2"	31'-3 1/2"	2	5	5'-9 1/2"	30'-11 1/2"
124	2	5	5 1/2"	5'-10 1/4"	31'-5 3/4"	2	5	5'-10 1/4"	31'-3 1/4"
125	2	5	6 1/2"	5'-10 3/4"	31'-9 1/4"	2	5	5'-10 3/4"	31'-5 3/4"
126	2	5	5"	5'-11 1/2"	31' -11 1/2"	2	5	5'-11 1/2"	31'-9 1/2"
127	2	5	6"	6'	32'-3"	2	5	6'	32'
128	2	5	7"	6'-1/2"	32'-6 1/2"	2	5	6'-1/2"	32'-2 1/2"
129	2	5	5 1/2"	6'-1 1/4"	32'-8 3/4"	2	5	6'-1 1/4"	32'-6 1/4"
130	2	5	6 1/2"	6'-1 3/4"	33'-1/4"	2	5	6'-1 3/4"	32'-8 3/4"

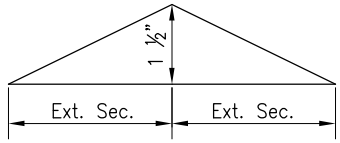

CAMBER DIAGRAM (2 Section Truss)

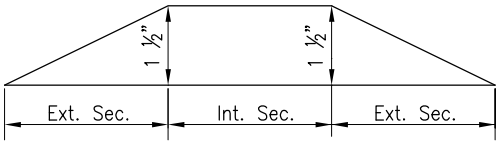

CAMBER DIAGRAM (3 Section Truss)

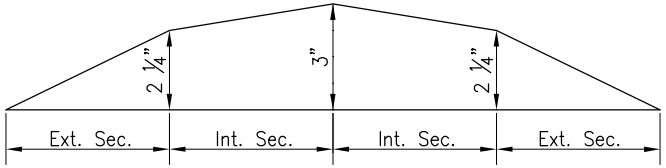

CAMBER DIAGRAM (4 Section Truss)

INDIANA DEPARTMENT OF TRANSPORTATION

SIGN BOX TRUSS STRUCTURE
TABLE OF DIMENSIONS
SPANS 86' thru 130'

DECEMBER 2008

DRAWING NO. E 802-SBTS-03

JOHN C. MAUSER REGISTERED No. 17361 STATE OF INDIANA PROFESSIONAL ENGINEER

John C. Mauser 07/18/08
DESIGN ENGINEER DATE

DESIGNED: JCM DRAWN:

04-01-09

802-T-172d 3 of 19

SIGN BOX TRUSS SCHEDULE

TRUSS TYPE	MAX. SIGN AREA	MAX. SPAN	MAX. MOUNTING HEIGHT	TRUSS MEMBERS										END SUPPORT MEMBERS						
				CHORD		VERTICAL		HORIZONTAL		VERTICAL DIAGONAL		HORIZONTAL DIAGONAL		HORIZONTAL		DIAGONAL		COLUMN		W-BEAM
			H	a		b		c		d		e		f		g		h		j
				DIA.	THK	DIA.	THK	DIA.	THK	DIA.	THK	DIA.	THK	DIA.	THK	DIA.	THK	DIA.	THK	
	SQ. FT.	FT.	FT.	IN.	IN.	IN.	IN.	IN.	IN.	IN.	IN.	IN.	IN.	IN.	IN.	IN.	IN.	IN.	IN.	
A	500	130	28' - 6"	6.00	0.250	2.50	0.250	2.50	0.188	3.00	0.375	4.00	0.375	2.00	0.220	5.00	0.375	14.00	0.500	W 8 x 58
B	700	100	28' - 6"	6.50	0.375	2.50	0.188	2.00	0.188	3.00	0.500	4.00	0.375	2.00	0.220	7.00	0.375	14.00	0.500	
C		130	28' - 6"	7.00	0.375	2.50	0.250	2.50	0.188	3.00	0.500	4.00	0.500	2.00	0.220	8.00	0.500	14.00	0.593	
D	900	100	28' - 6"	7.00	0.375	2.50	0.250	2.50	0.188	3.00	0.500	4.00	0.500	2.00	0.220	8.00	0.500	18.00	0.500	
E		130	28' - 6"	7.00	0.500	2.50	0.250	2.50	0.25	3.00	0.500	4.00	0.500	2.00	0.220	8.00	0.593	18.00	0.562	W 10 x 68

NOTES:

1. See Standard Drawings E 802-SBTS-01 thru 03, and E 802-SBTS-05 for dimensions and members locations.
2. See Standard Drawings E 802-SBTS-12 & 13 for base plate and anchor bolt details.
3. See Standard Drawing E 802-SBTS-03 for camber diagram.
4. See Standard Drawing E 802-SBTS-16 thru 19 for foundation details.

INDIANA DEPARTMENT OF TRANSPORTATION

SIGN BOX TRUSS STRUCTURE
TRUSS SCHEDULE

DECEMBER 2008

DRAWING NO. E 802-SBTS-04

JOHN C. MAUSER REGISTERED No. 17361 STATE OF INDIANA PROFESSIONAL ENGINEER

John C. Mauser 07/18/08
DESIGN ENGINEER DATE

DESIGNED: JCM DRAWN:

04-01-09

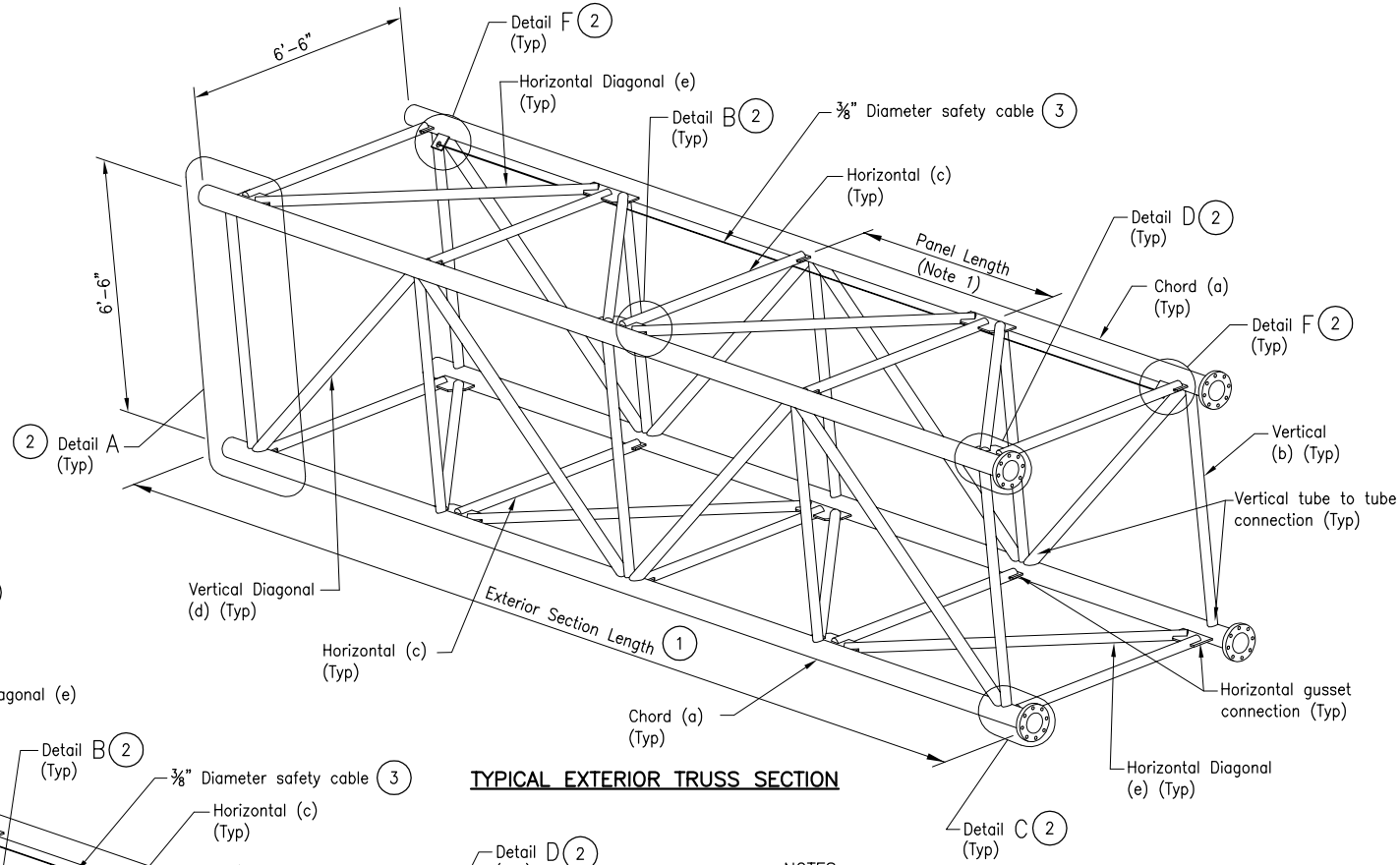

TYPICAL EXTERIOR TRUSS SECTION

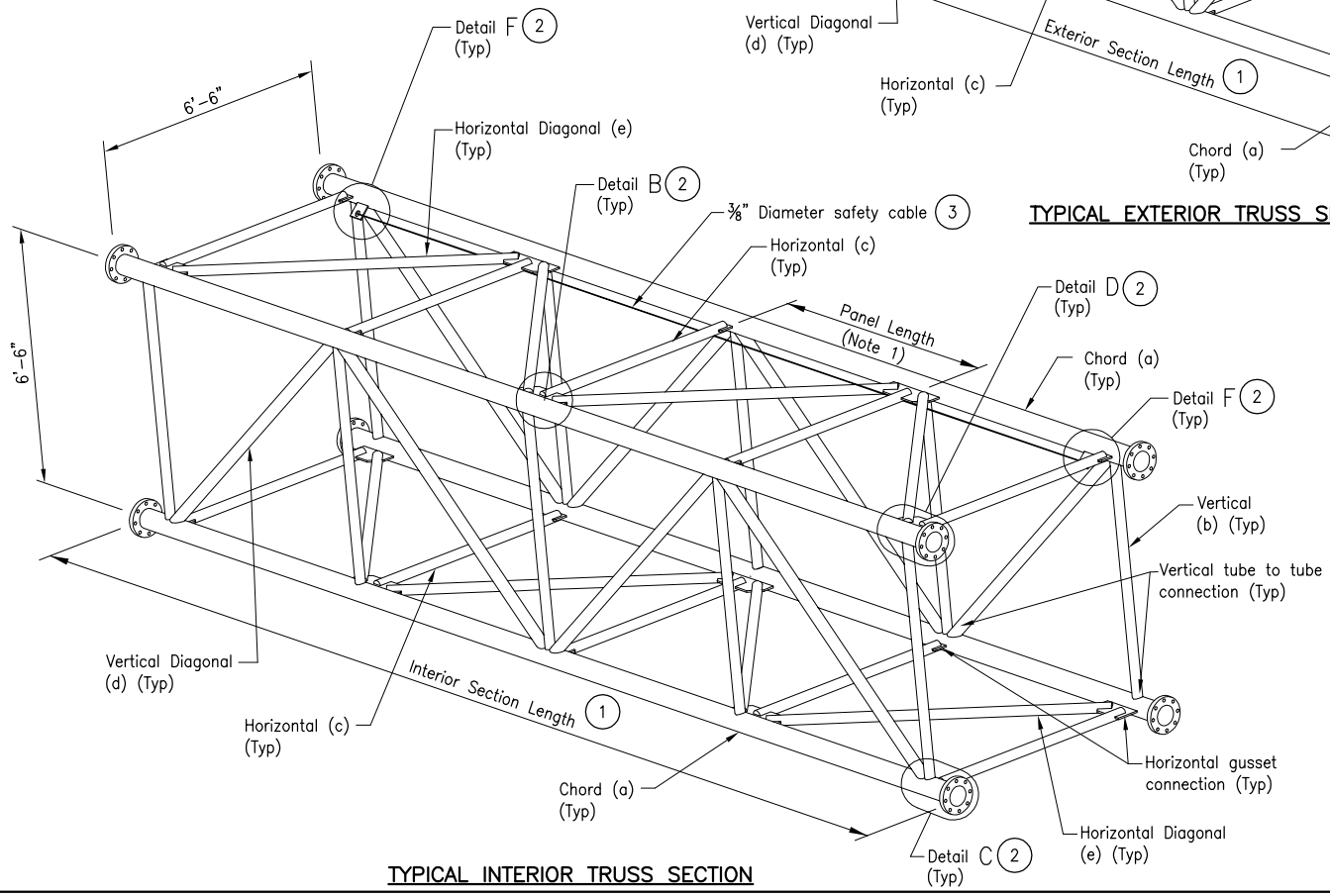

TYPICAL INTERIOR TRUSS SECTION

NOTES:

(1) See Standard Drawing E 802-SBTS-02 and 03 for table of dimensions. Number of panels and sections varies.

(2) See Standard Drawing E 802-SBTS-06 for Details A thru F.

(3) Safety cable shall be located adjacent to the upper chord on the same side of each truss section.

INDIANA DEPARTMENT OF TRANSPORTATION

SIGN BOX TRUSS STRUCTURE ISOMETRIC VIEWS

DECEMBER 2008

DRAWING NO. E 802-SBTS-05

JOHN C. MAUSER REGISTERED No. 17361 STATE OF INDIANA PROFESSIONAL ENGINEER

John C. Mauser 07/18/08
DESIGN ENGINEER DATE

DESIGNED: JCM DRAWN:

802-T-172d 5 of 19

04-01-09

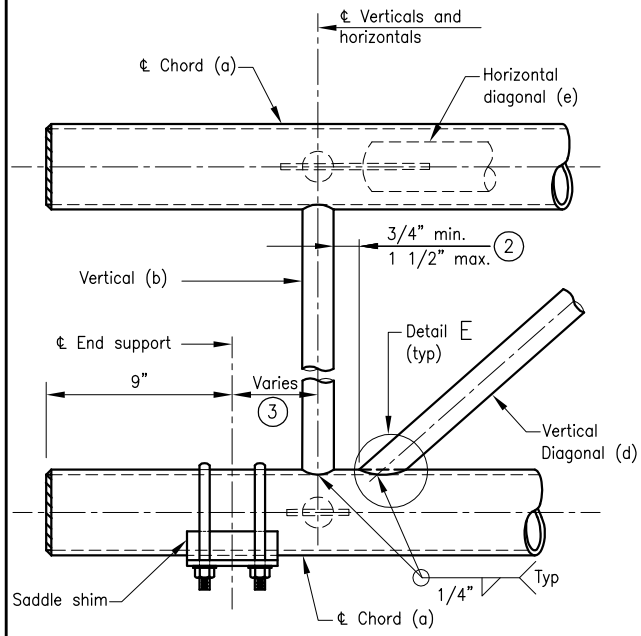

DETAIL A
EXTERIOR SECTION AT END SUPPORT

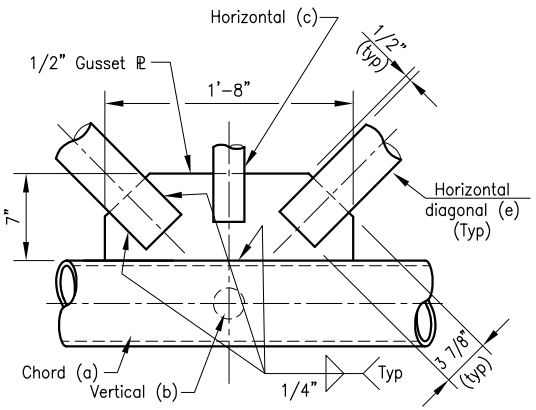

DETAIL B (PLAN VIEW)
TYPICAL PANEL CONNECTION

NOTES:

1. See Standard Drawing E 802-SBTS-04 for schedule of truss members.
2. Vertical diagonals shall be detailed for minimum offset from the panel point based on the following: Offset shall be such as to provide a 3/4" minimum to 1 1/2" maximum clearance between any diagonal and any vertical.
3. See Standard Drawings E 802-SBTS-02 & 03 for variable end dimension.
4. End plate may be welded as one piece and then slotted or welded as two pieces after slotting the member.

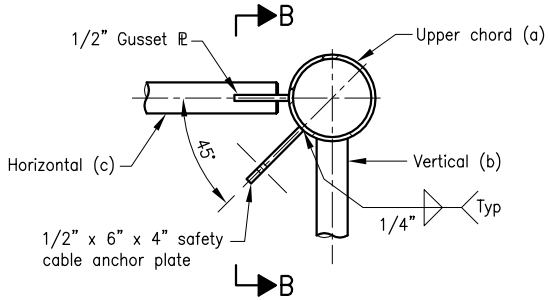

DETAIL F (SECTION AT UPPER CHORD)
SAFETY CABLE ANCHOR PLATE

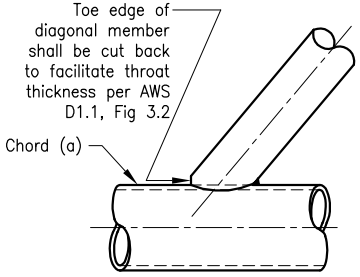

TOE EDGE – DETAIL E

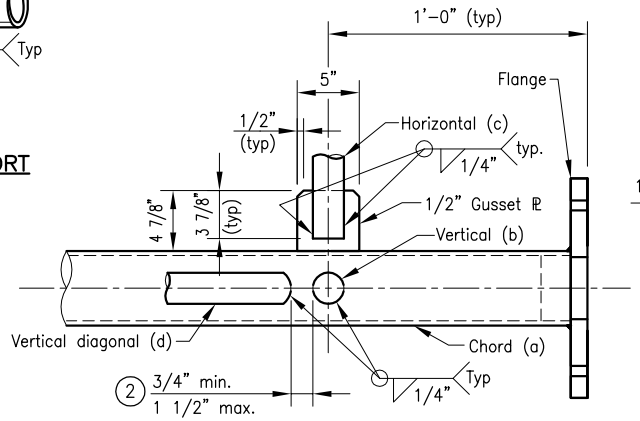

DETAIL C (PLAN VIEW)
BOTTOM CHORD AT FLANGE CONNECTION

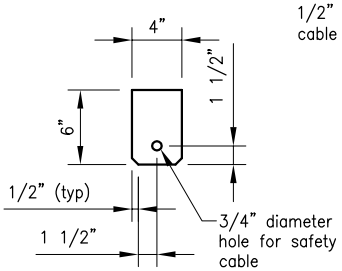

SAFETY CABLE
ANCHOR PLATE

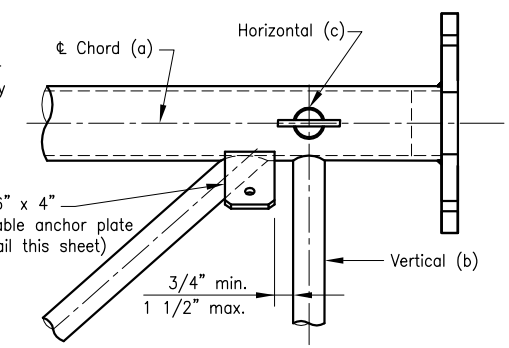

VIEW B–B
SAFETY CABLE ANCHOR PLATE

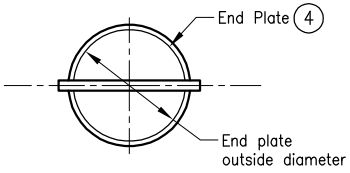

SECTION A–A

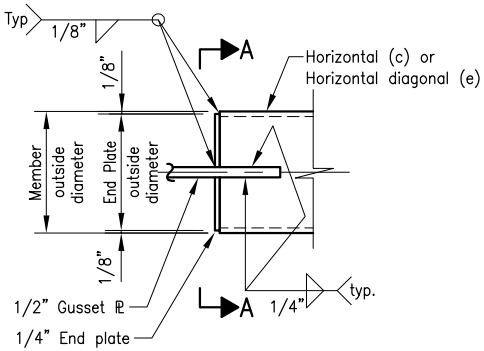

ELEVATION VIEW
TYPICAL GUSSET CONNECTION DETAIL

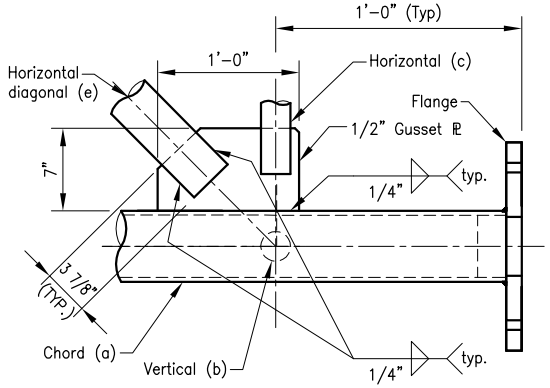

DETAIL D (PLAN VIEW)
TOP CHORD AT FLANGE CONNECTION

INDIANA DEPARTMENT OF TRANSPORTATION

SIGN BOX TRUSS STRUCTURE CONNECTIONS AND WELD DETAILS

DECEMBER 2008

DRAWING NO. E 802-SBTS-06

JOHN C. MAUSER REGISTERED No. 17361 STATE OF INDIANA PROFESSIONAL ENGINEER

John C. Mauser 07/18/08
DESIGN ENGINEER DATE

DESIGNED: JCM DRAWN:

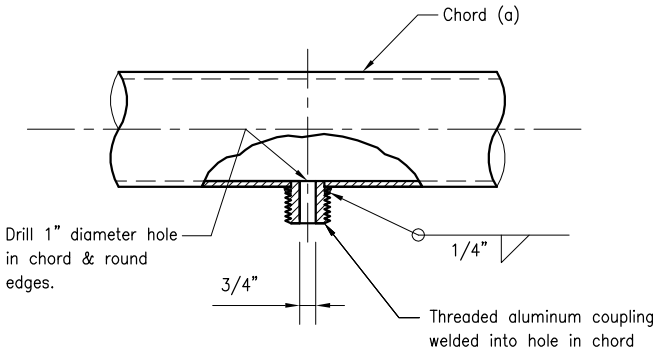

WIRE OUTLET DETAIL

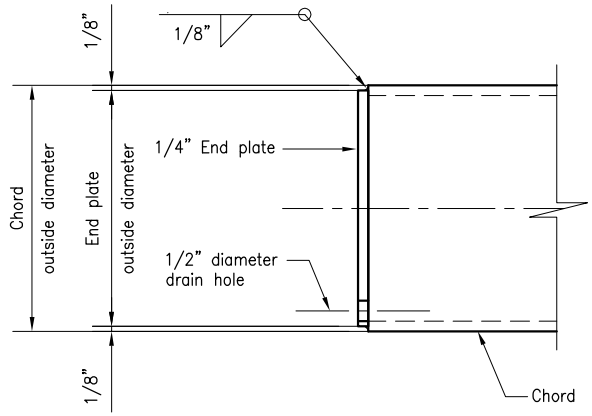

SECTION A–A

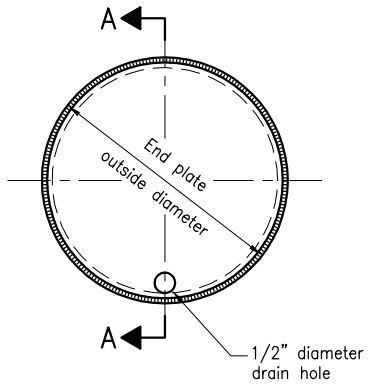

END VIEW

ALUMINUM CHORD END DETAILS

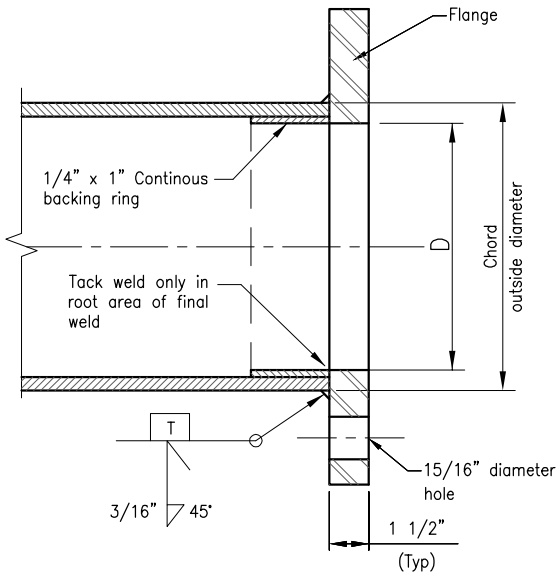

SECTION B–B

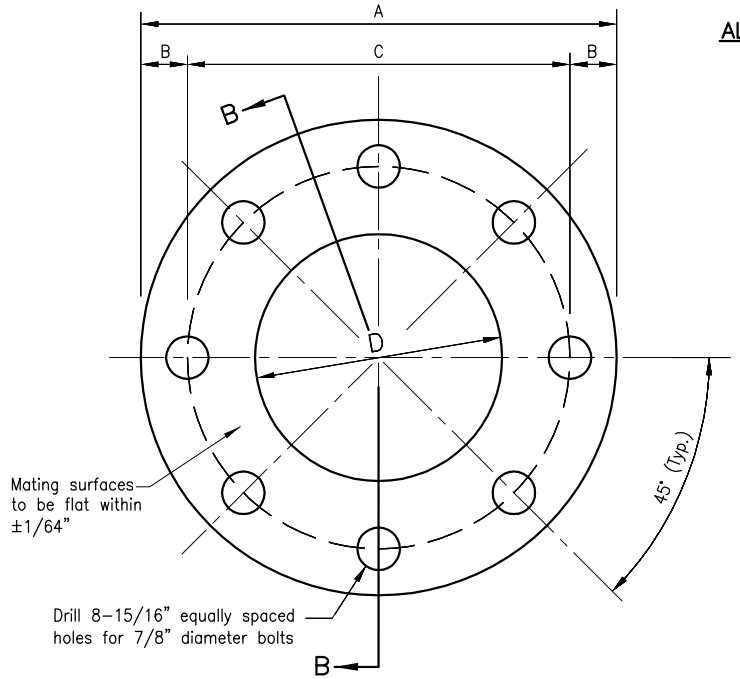

FLANGE DETAILS

NOTES:

1. See Standard Drawing E 802–SBTS–01 for chord splice locations and wire outlets.

TABLE OF FLANGE DIMENSIONS					
TRUSS CHORD Outside Diameter	BOLT SIZE	DIMENSION (INCHES)			
		A	B	C	D
6" x 1/4"	7/8"	11"	1"	9"	5"
6 1/2" x 3/8"	7/8"	12"	1"	10"	5 1/4"
7" x 3/8"	7/8"	12"	1"	10"	5 3/4"
7" x 1/2"	7/8"	12"	1"	10"	5 1/2"

INDIANA DEPARTMENT OF TRANSPORTATION

SIGN BOX TRUSS STRUCTURE
ALUMINUM CHORD DETAILS

DECEMBER 2008

DRAWING NO. E 802–SBTS–07

JOHN C. MAUSER REGISTERED No. 17361 STATE OF INDIANA PROFESSIONAL ENGINEER

John C. Mauser 07/18/08
DESIGN ENGINEER DATE

DESIGNED: JCM DRAWN:

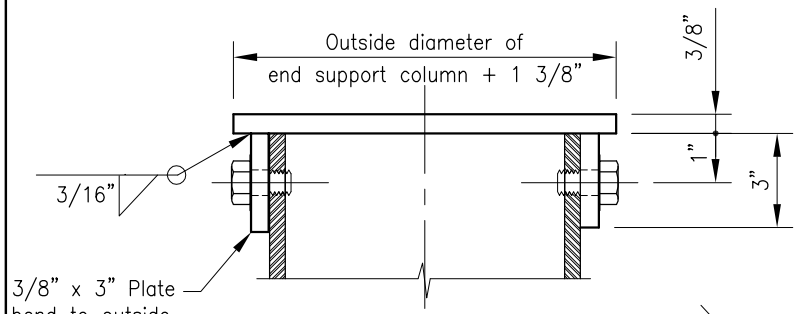

SECTION A–A

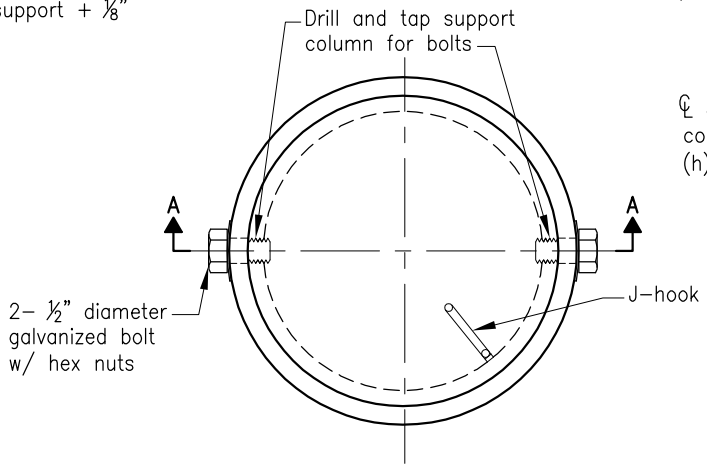

PLAN
TOP CAP – STEEL END SUPPORTS

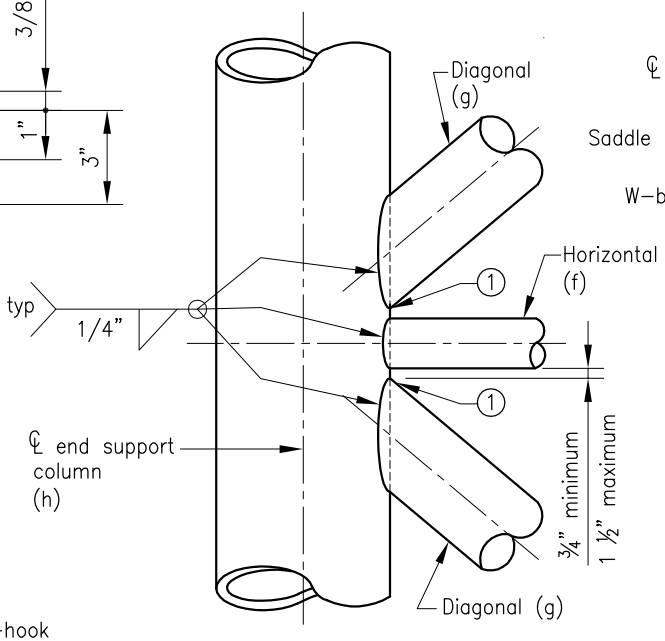

ELEVATION (END SUPPORT)
TYPICAL BRACING MEMBERS CONNECTION

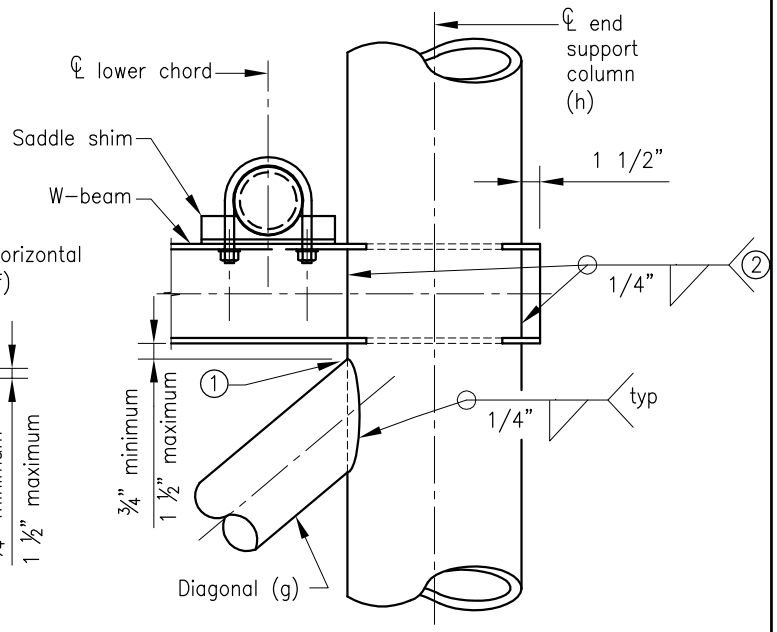

ELEVATION (END SUPPORT)
TYPICAL W BEAM CONNECTION

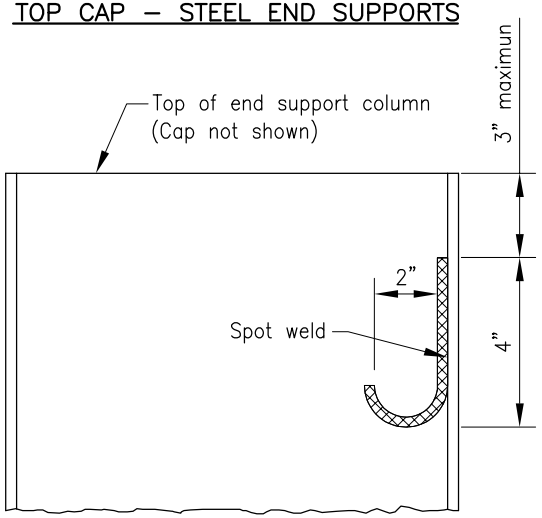

CABLE J HOOK

NOTES:

1. Toe edge of diagonal member shall be cut back to facilitate throat thickness. See Standard Drawing E 802–SBTS–06 for toe edge detail.

2. Cut holes in end support columns for W–beams to pass through. Holes to have 1/8 inch maximum clearance to W–beam. Holes in opposite sides of column to be checked for proper alignment prior to cutting.

INDIANA DEPARTMENT OF TRANSPORTATION

SIGN BOX TRUSS STRUCTURE
END SUPPORT DETAILS

DECEMBER 2008

DRAWING NO. E 802–SBTS–08

JOHN C. MAUSER REGISTERED No. 17361 STATE OF INDIANA PROFESSIONAL ENGINEER

John C. Mauser 07/18/08
DESIGN ENGINEER DATE

DESIGNED: JCM DRAWN:

04-01-09

802-T-172d 8 of 19

TABLE 1 - SPACER ASSEMBLY DIMENSIONS

TRUSS TYPE	END SUPPORT COLUMN (h) SIZE (O.D.)	Z	D	L
	IN	IN.	IN.	IN.
A	14	4 1/2	6 1/16	24.0
B	14	4 1/4	6 9/16	24.0
C	14	4	7 1/16	24.0
D	18	2	7 1/16	26.0
E	18	2	7 1/16	26.0

NOTES:

1. Provide isolation from steel dissimilar metal as required.
2. For truss type D and E the 1" stem plate is not required. Fillet weld front and rear plates together.

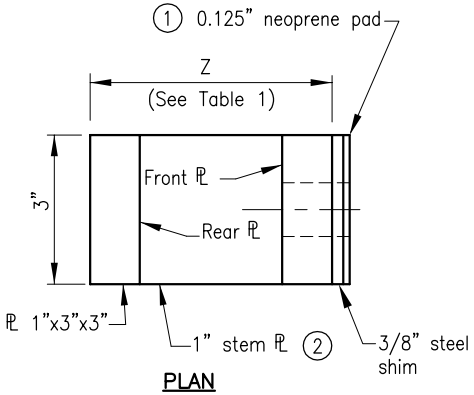

PLAN
SECTION A–A

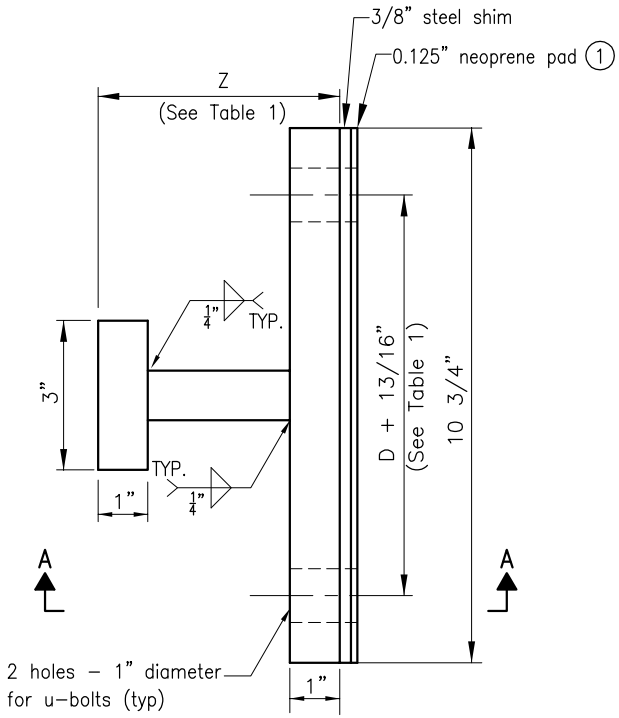

ELEVATION
END SUPPORT SPACER ASSEMBLY DETAIL

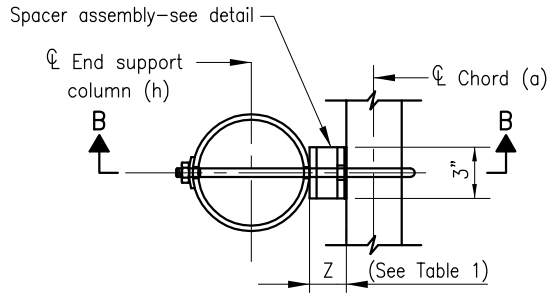

PLAN

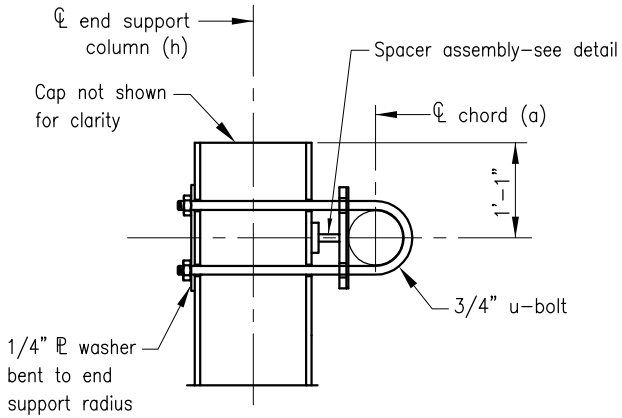

SECTION B–B
UPPER CHORD CONNECTION DETAILS

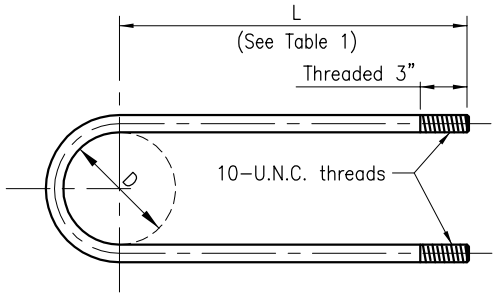

3/4" DIA. STAINLESS STEEL U–BOLT DETAIL

INDIANA DEPARTMENT OF TRANSPORTATION

SIGN BOX TRUSS STRUCTURE
TRUSS CONNECTION DETAILS

DECEMBER 2008

DRAWING NO. E 802–SBTS–09

JOHN C. MAUSER REGISTERED No. 17361 STATE OF INDIANA PROFESSIONAL ENGINEER

John C. Mauser 07/18/08
DESIGN ENGINEER DATE

DESIGNED: JCM DRAWN:

04-01-09

802-T-172d 9 of 19

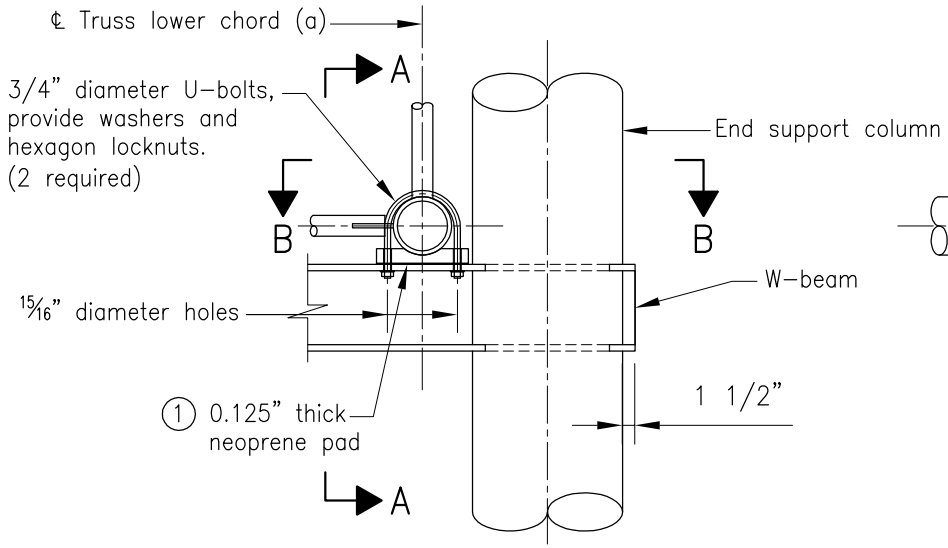

DETAIL A

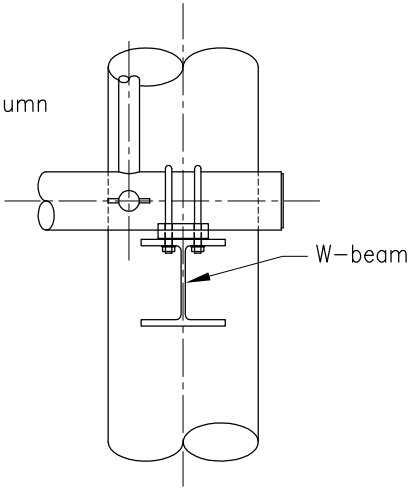

SECTION A–A

NOTES:

1 Provide neoprene pads at all chord to W-beam bearing surfaces.

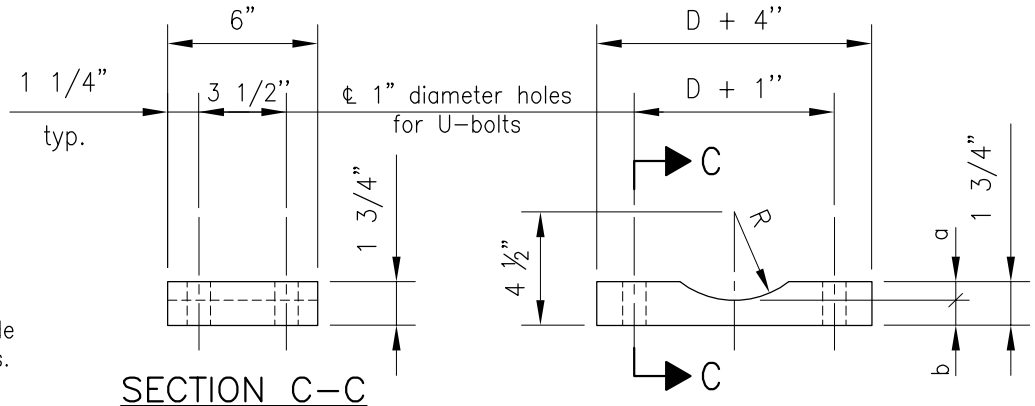

SECTION C–C

R = D/2 + 1/32"
D = Outside diameter of chord.

SADDLE SHIM DETAIL

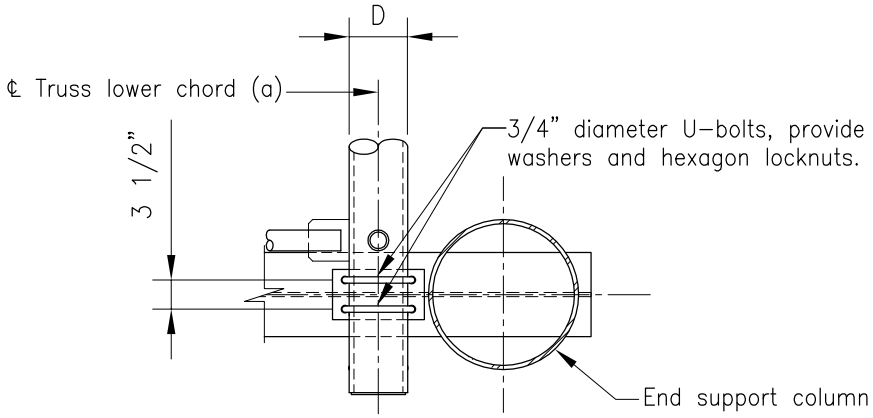

SECTION B–B
LOWER CHORD CONNECTION DETAIL

Truss Chord Outside Diameter D	a	b
6"	9/32"	1 15/32"
6 1/2"	17/32"	1 7/32"
7"	25/32"	31/32"

INDIANA DEPARTMENT OF TRANSPORTATION

SIGN BOX TRUSS STRUCTURE
TRUSS CONNECTION DETAILS

DECEMBER 2008

DRAWING NO. E 802-SBTS-10

JOHN C. MAUSER REGISTERED No. 17361 STATE OF INDIANA PROFESSIONAL ENGINEER

John C. Mauser 07/18/08
DESIGN ENGINEER DATE

DESIGNED: JCM DRAWN: REM

04-01-09

802-T-172d 10 of 19

NOTES:

1. In lieu of fabricated handhole frame as shown, frame may be cut from 3" plate (rolling direction vertical).
2. See Standard Drawing E 802-SNWR-03 for grounding post details. Grounding post to be placed on far side of support directly opposite center of handhole.
3. See Standard Drawing E 802-SBTS-12 for handhole locations.

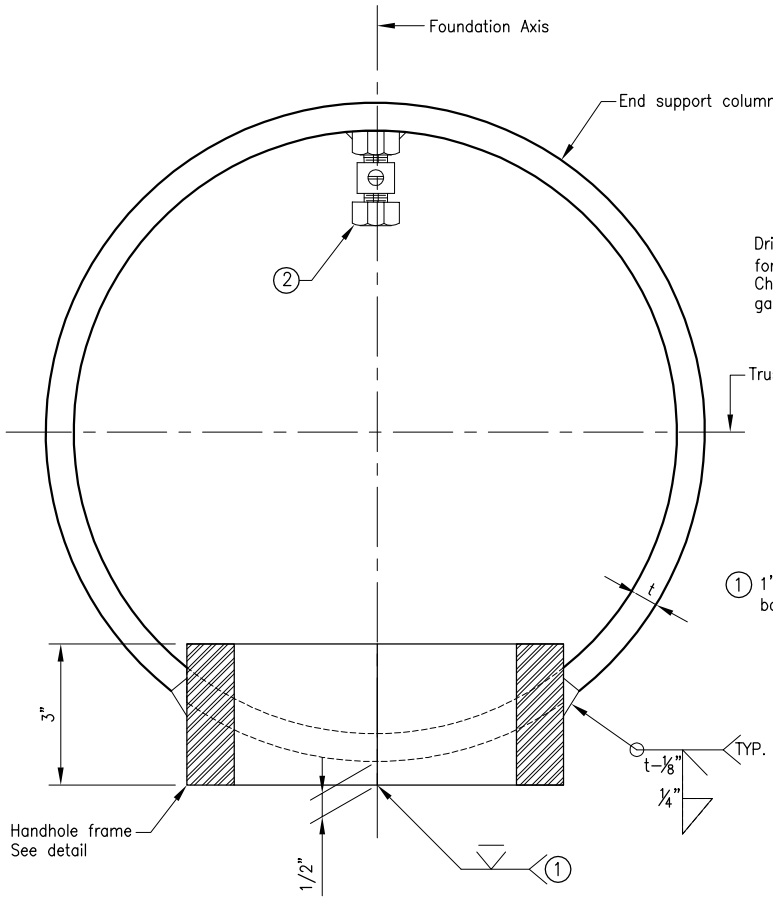

PLAN

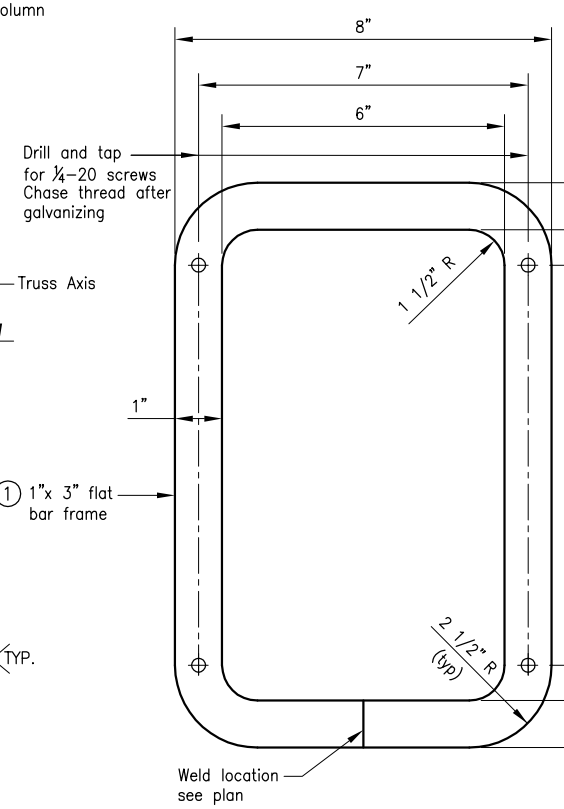

HANDHOLE FRAME DETAIL

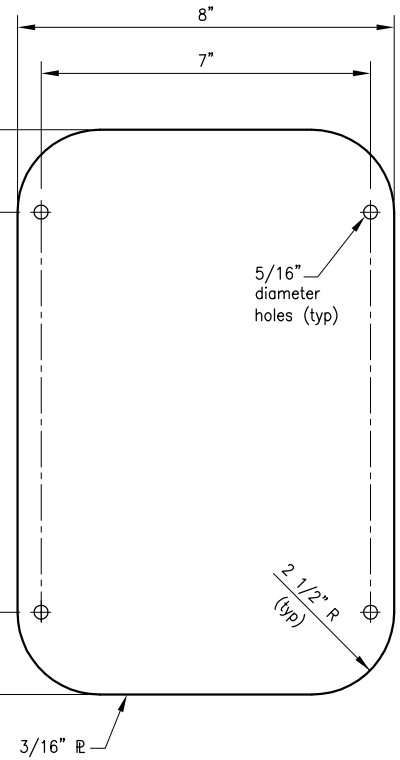

HANDHOLE COVER

INDIANA DEPARTMENT OF TRANSPORTATION

SIGN BOX TRUSS STRUCTURE
STEEL END SUPPORT HANDHOLE DETAILS

DECEMBER 2008

DRAWING NO. E 802-SBTS-11

JOHN C. MAUSER REGISTERED No. 17361 STATE OF INDIANA PROFESSIONAL ENGINEER

John C. Mauser 07/18/08
DESIGN ENGINEER DATE

DESIGNED: JCM DRAWN: MBW

802-T-172d 11 of 19

04-01-09

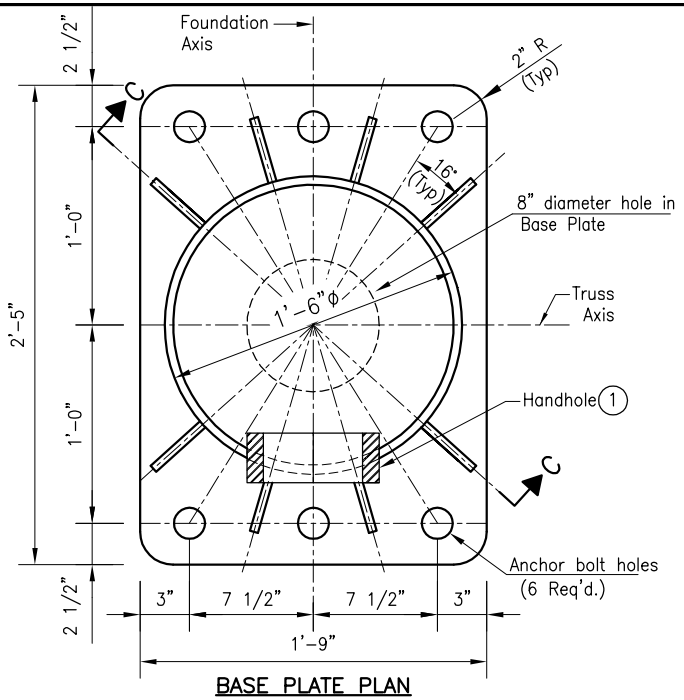

BASE PLATE PLAN
STEEL END SUPPORT
TYPE A

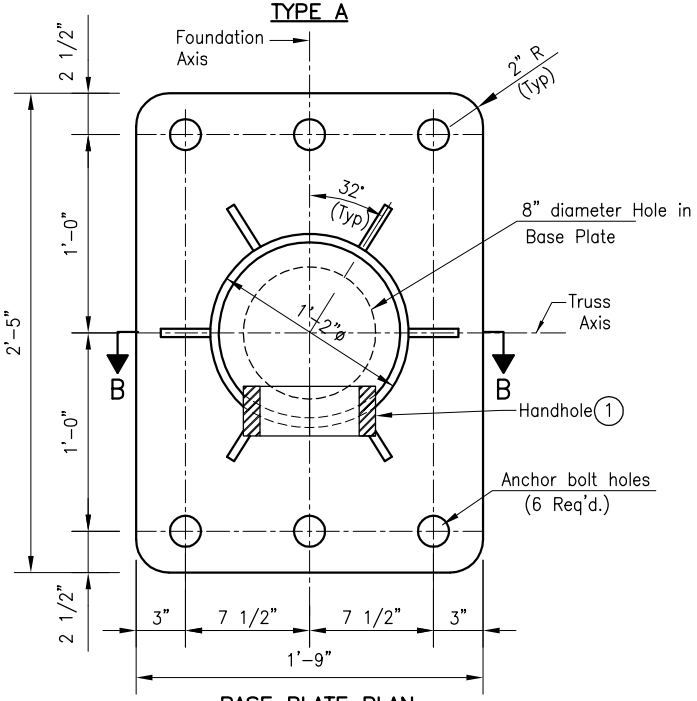

BASE PLATE PLAN
STEEL END SUPPORT
TYPE B

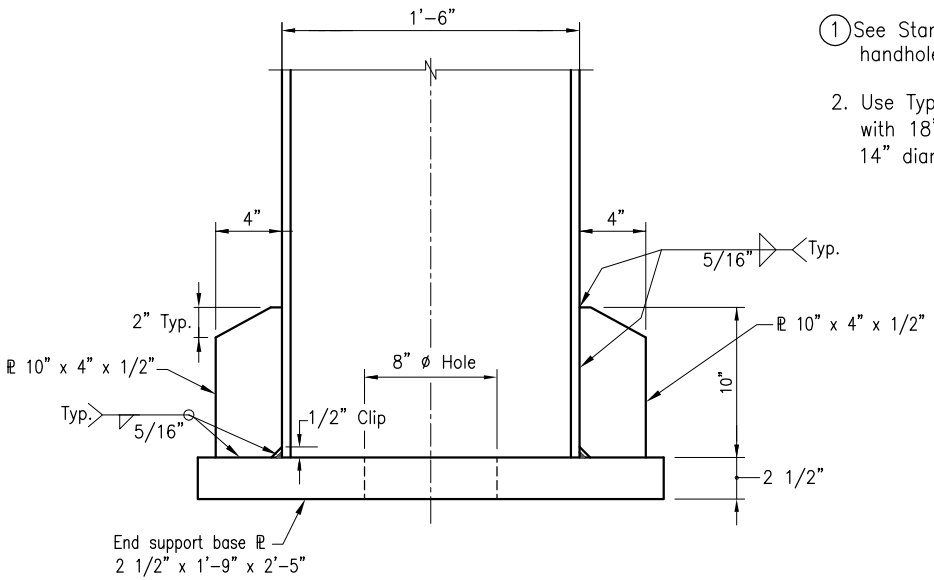

SECTION C–C

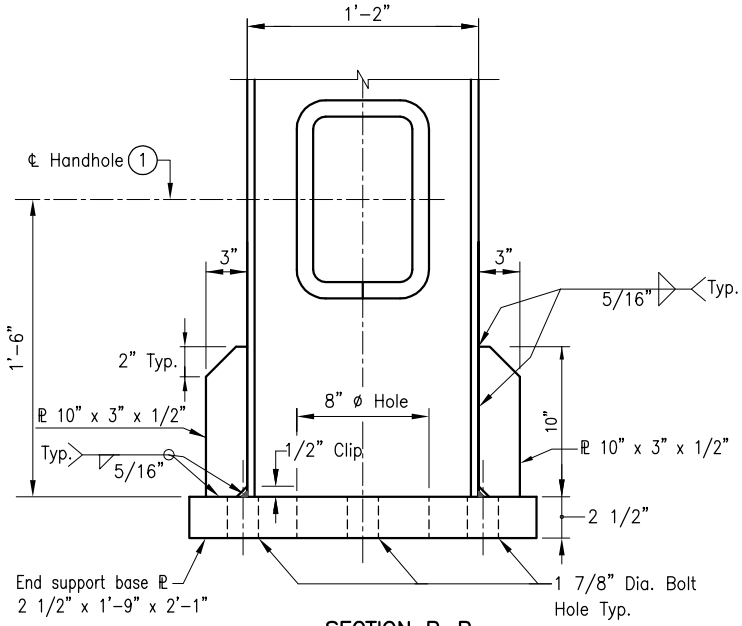

SECTION B–B

NOTES:

(1) See Standard Drawing E 802-SBTS-11 for handhole details.

2. Use Type A Base Plate for End Supports with 18" diameter columns and Type B for 14" diameter columns.

INDIANA DEPARTMENT OF TRANSPORTATION

SIGN BOX TRUSS STRUCTURE
STEEL END SUPPORT BASE DETAILS

DECEMBER 2008

DRAWING NO. E 802-SBTS-12

JOHN C. MAUSER REGISTERED No. 17361 STATE OF INDIANA PROFESSIONAL ENGINEER

John C. Mauser 07/18/08
DESIGN ENGINEER DATE

DESIGNED: JCM DRAWN: MBW

04-01-09

802-T-172d 12 of 19

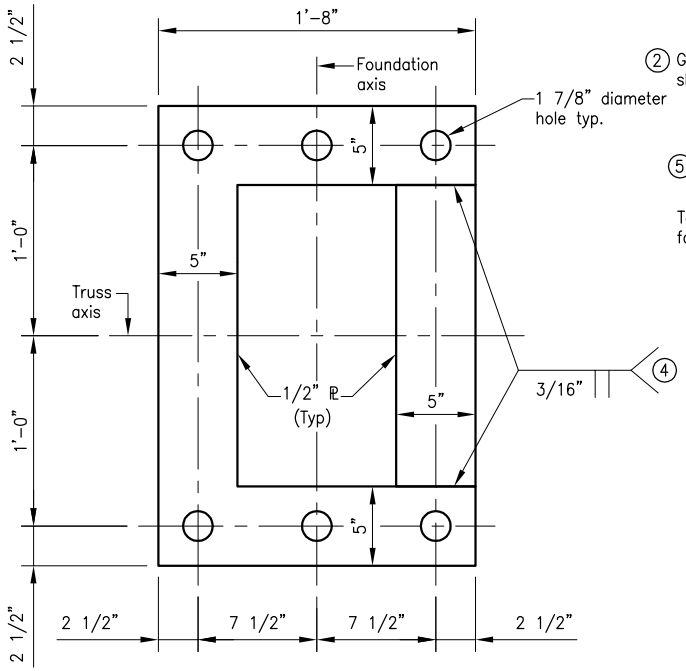

TEMPORARY POSITIONING PLATE

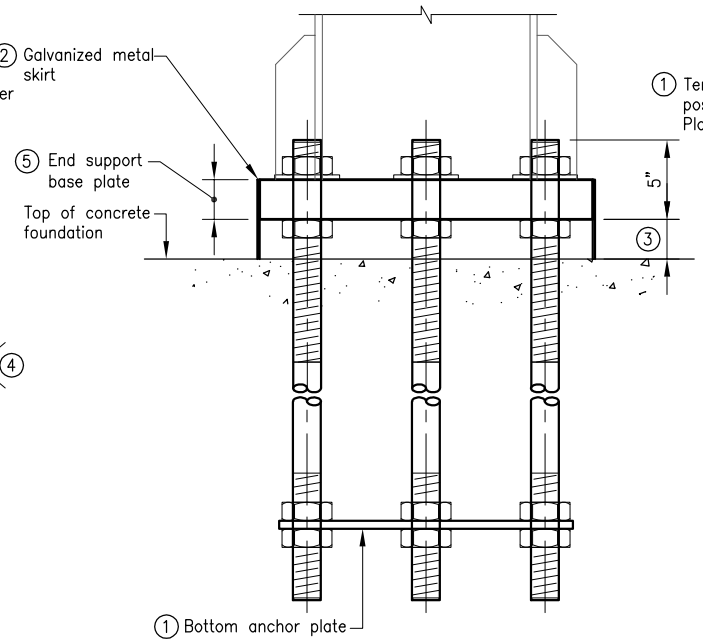

ANCHOR BOLT DETAILS
AFTER CONCRETE PLACEMENT

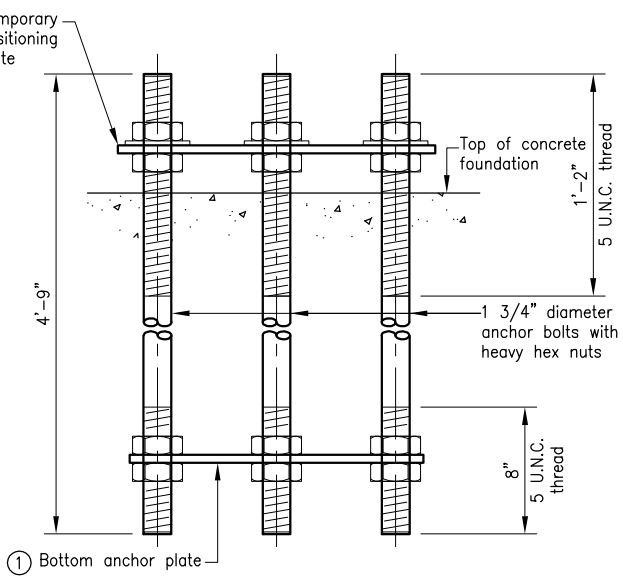

ANCHOR BOLT DETAILS
BEFORE CONCRETE PLACEMENT

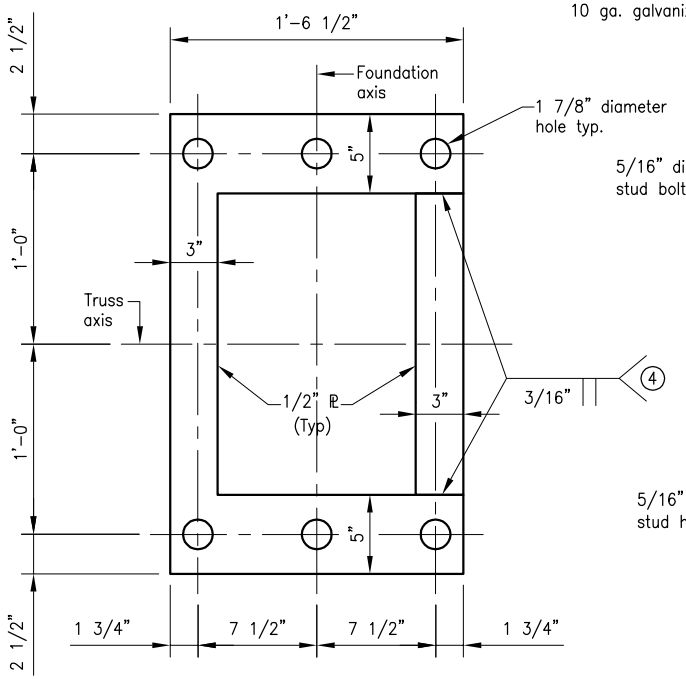

BOTTOM ANCHOR PLATE

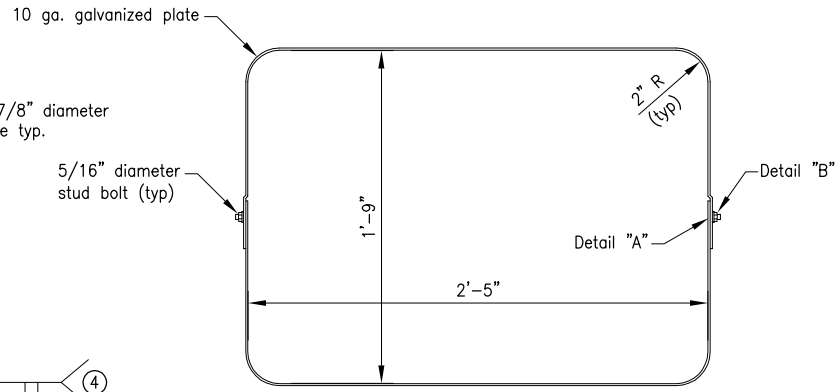

SKIRT DETAIL

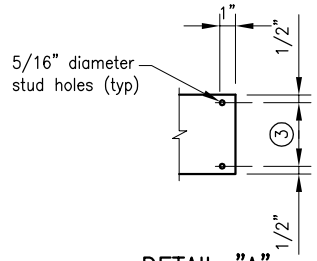

DETAIL "A"

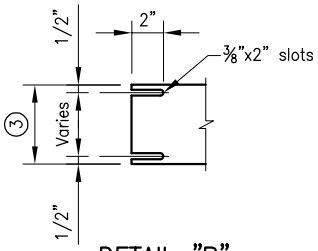

DETAIL "B"

NOTES:

1. Use temporary positioning plate and bottom anchor plate for all foundations. Temporary positioning plate should be removed after placing concrete.
2. Secure galvanized metal skirt to base plate after erection as show in skirt detail.
3. Minimum base plate gap is 2 1/2" and can be increased up to 5 1/2". Metal skirt width shall be at least 1 1/2" more than the actual gap.
4. Optionally may use four separate bars. Weld to maintain angles and shapes as shown.
5. For end support base plate details see Standard Drawing E 802-SBTS-12.

INDIANA DEPARTMENT OF TRANSPORTATION

SIGN BOX TRUSS STRUCTURE
STEEL END SUPPORT BASE DETAILS

DECEMBER 2008

DRAWING NO. E 802-SBTS-13

JOHN C. MAUSER REGISTERED No. 17361 STATE OF INDIANA PROFESSIONAL ENGINEER

John C. Mauser 07/18/08
DESIGN ENGINEER DATE

DESIGNED: JCM DRAWN: MBW

802-T-172d 13 of 19

04-01-09

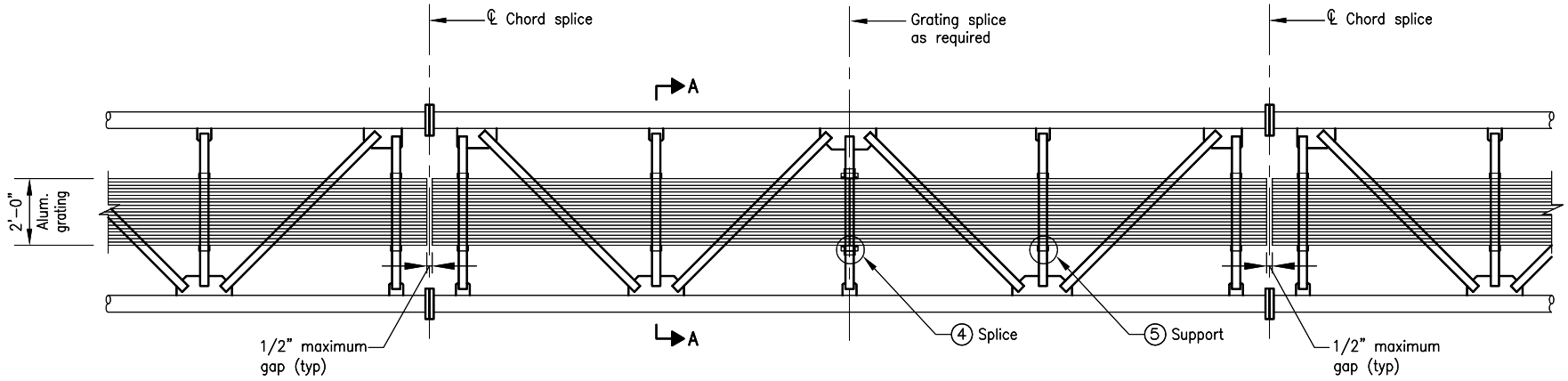

WALKWAY GRATING PLAN

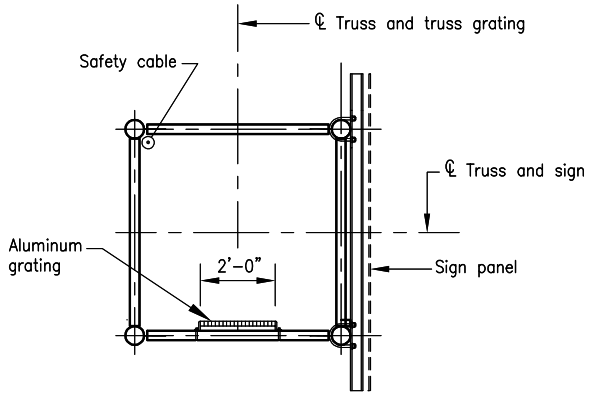

SECTION A–A

Notes:

1. See Standard Drawing E 802–SNWW–02 for additional aluminum grating requirements.
2. Grating shall run full length center to center of end support frames plus 9" each end.
3. Grating width is nominal and may vary ± ½" based on available standard widths.

④ Grating can be spliced on any of the horizontals within a section as needed. See Detail 2 on Standard Drawing E 802–SBTS–15 for typical grating splice detail.

⑤ See Detail 1 on Standard Drawing E 802–SBTS–15 for typical grating support detail.

INDIANA DEPARTMENT OF TRANSPORTATION

SIGN BOX TRUSS STRUCTURE
INTERIOR WALKWAY GRATING PLAN

DECEMBER 2008

DRAWING NO. E 802–SBTS–14

JOHN C. MAUSER REGISTERED No. 17361 STATE OF INDIANA PROFESSIONAL ENGINEER

John C. Mauser 07/18/08
DESIGN ENGINEER DATE

DESIGNED: JCM DRAWN: MBW

04-01-09

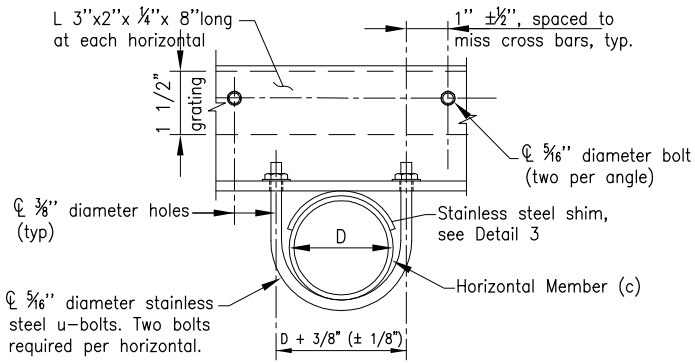

SECTION B–B

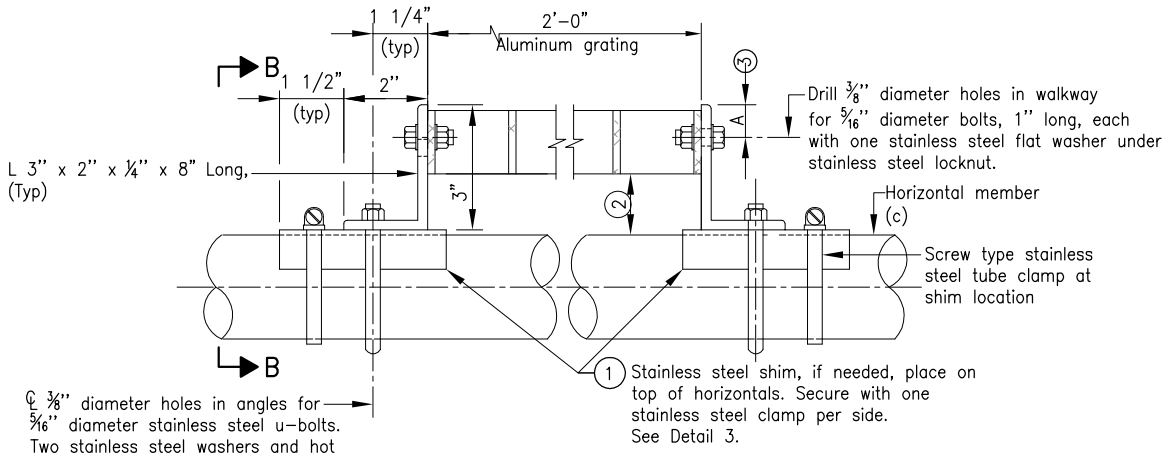

GRATING SUPPORT
DETAIL 1
(Continuous Truss grating)

TABLE 1	
HORIZONTAL MEMBER OUTSIDE DIAMETER	A (IN)
2"	3/4
2 1/2"	1/2

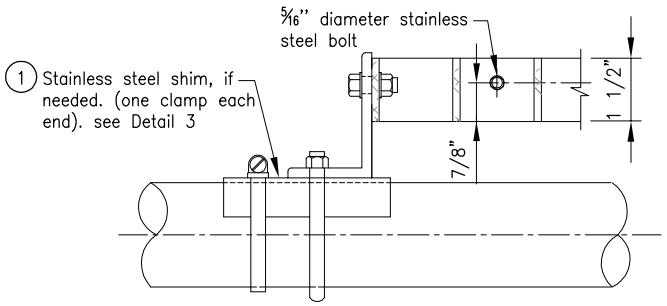

SECTION C–C
(Details not shown same as Detail 1)

NOTES:

1. Stainless steel shims shall be placed as shown in Details 1 and 2 if needed to compensate for alignment variations between horizontal and horizontal diagonals. Thicker shims may be used subject to shims performing properly.
2. Tube to grating gap may vary from 1 1/4" to 1 1/2", max. to align walkway, allow for camber, etc.
3. See Table 1 for A dimensions.

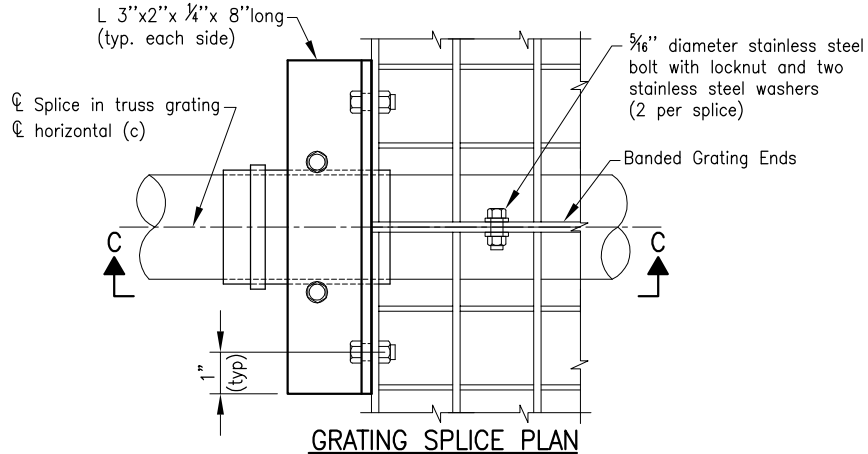

GRATING SPLICE PLAN
DETAIL 2

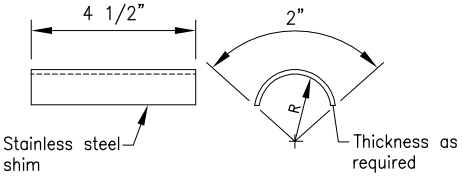

ELEVATION END VIEW
SHIM –DETAIL 3
R = bend to match tube (approximately)

INDIANA DEPARTMENT OF TRANSPORTATION

SIGN BOX TRUSS STRUCTURE
INTERIOR WALKWAY GRATING DETAILS

DECEMBER 2008

DRAWING NO. E 802–SBTS–15

JOHN C. MAUSER REGISTERED No. 17361 STATE OF INDIANA PROFESSIONAL ENGINEER

John C. Mauser 07/18/08
DESIGN ENGINEER DATE

DESIGNED: JCM DRAWN:

802-T-172d 15 of 19

04-01-09

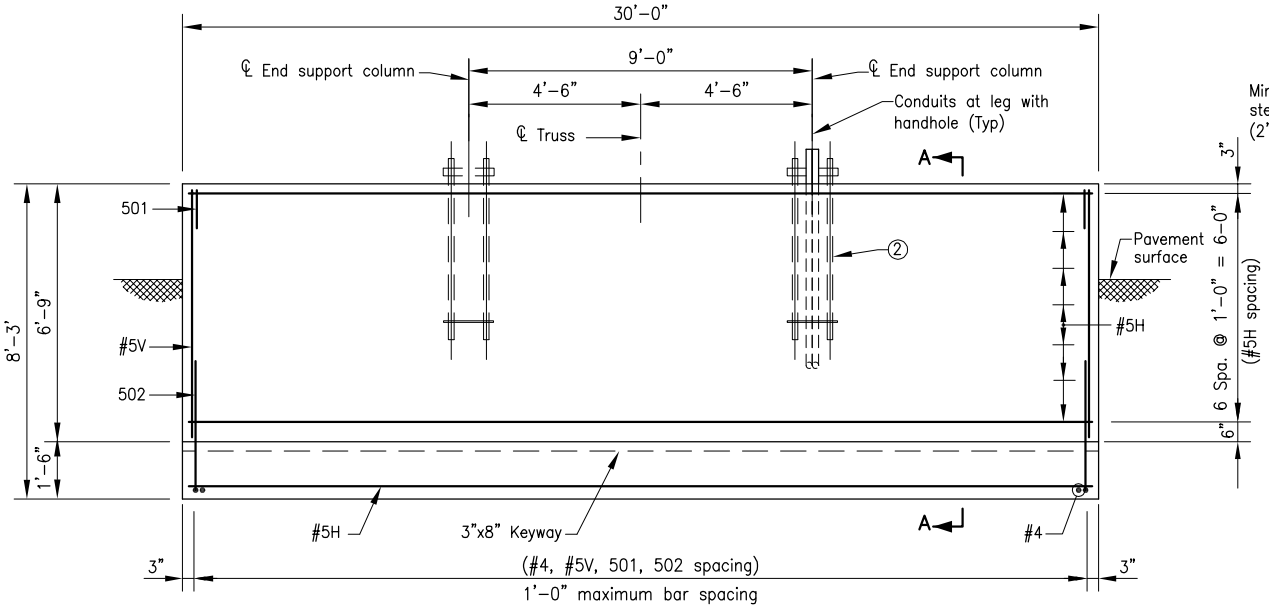

SECTION C–C

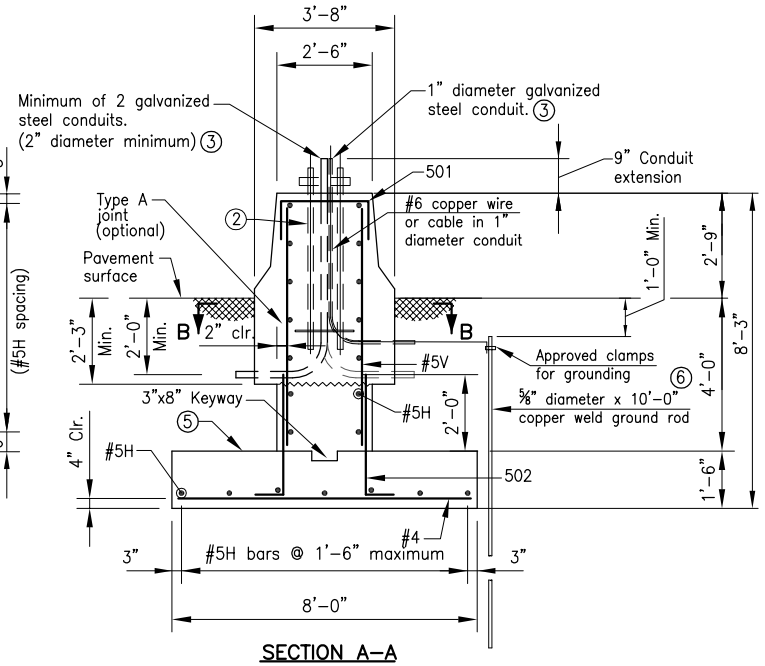

SECTION A–A

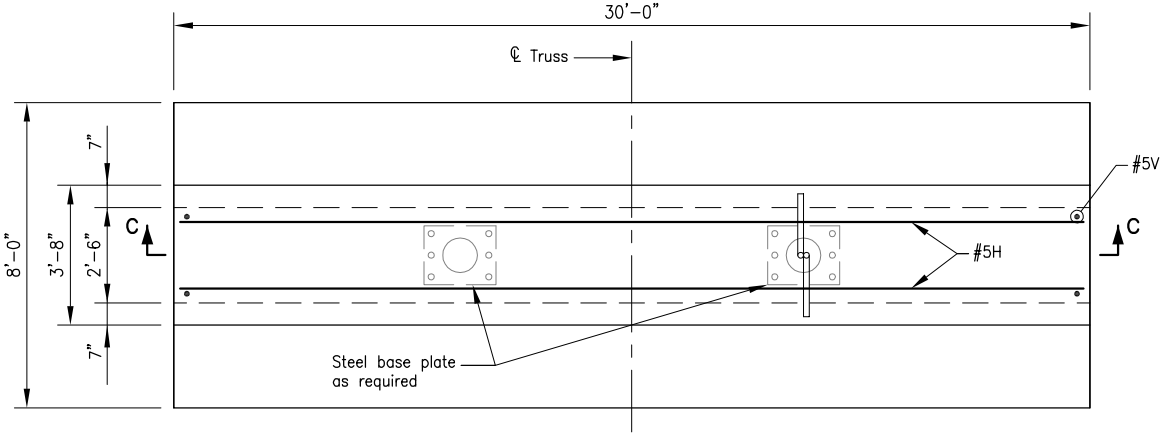

SECTION B–B

Notes:

1 See Standard Drawing E 602–CCMB–03 for barrier wall width transition.

② See Standard Drawing E 802–SBTS–13 for anchor bolts.

③ Thread and cap both ends of steel conduit.

4 See Standard Drawing E 802–SBTS–19 for reinforcing schedule.

⑤ The top of the footing shall be a minimum of 4'–0" below the pavement or ground surface.

⑥ Only one ground rod per structure is required.

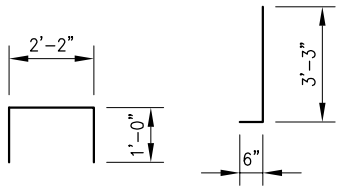

501 x 4'–2" 502 x 3'–9"

Legend:

H = Horizontal bar

V = Vertical bar

INDIANA DEPARTMENT OF TRANSPORTATION

SIGN BOX TRUSS STRUCTURE FOUNDATION AT 33" CONCRETE BARRIER WALL

DECEMBER 2008

DRAWING NO. E 802–SBTS–16

JOHN C. MAUSER REGISTERED No. 17361 STATE OF INDIANA PROFESSIONAL ENGINEER

John C. Mauser 9/24/08
DESIGN ENGINEER DATE

DESIGNED: JCM DRAWN: REM

04-01-09

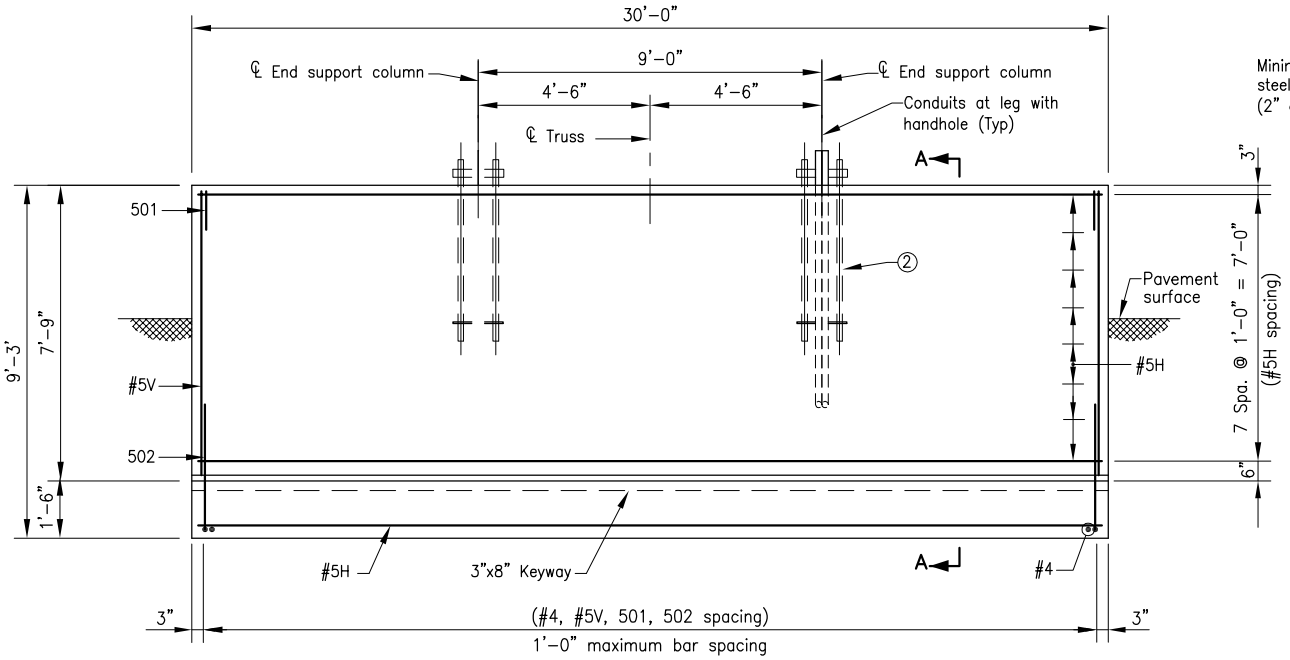

SECTION C–C

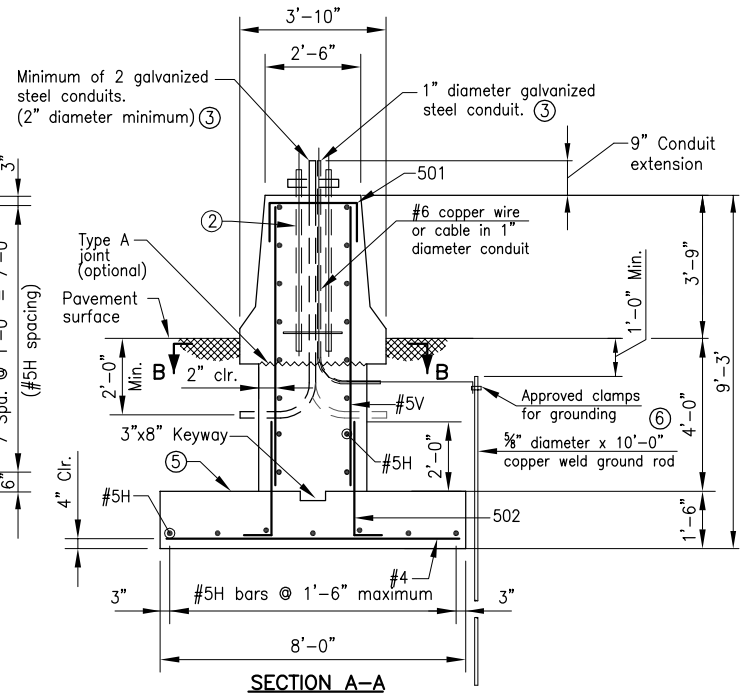

SECTION A–A

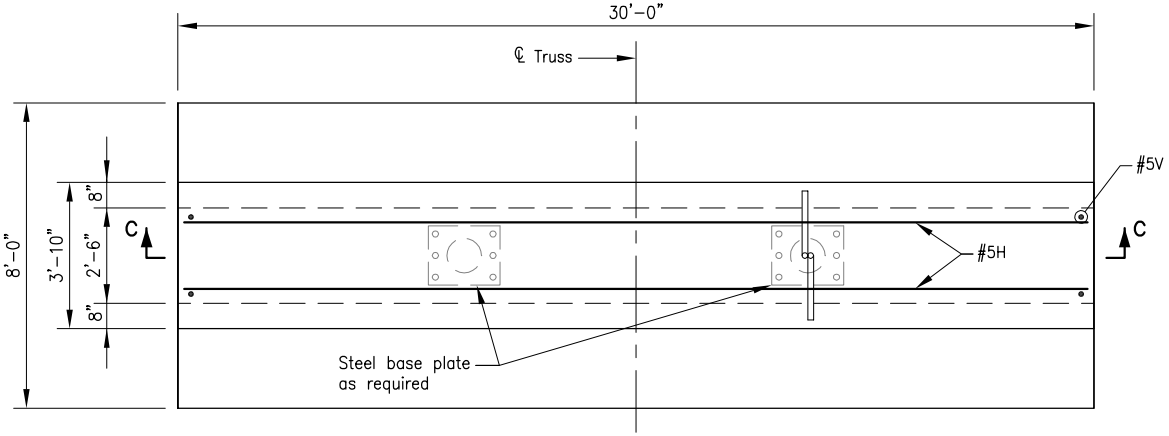

SECTION B–B

Notes:

1 See Standard Drawing E 602–CCMB–03 for barrier wall width transition.

② See Standard Drawing E 802–SBTS–13 for anchor bolts.

③ Thread and cap both ends of steel conduit.

4 See Standard Drawing E 802–SBTS–19 for reinforcing schedule.

⑤ The top of the footing shall be a minimum of 4'–0" below the pavement or ground surface.

⑥ Only one ground rod per structure is required.

Legend:

H = Horizontal bar

V = Vertical bar

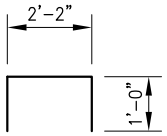

501 x 4'–2"

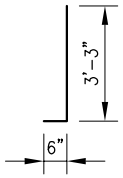

502 x 3'–9"

INDIANA DEPARTMENT OF TRANSPORTATION

SIGN BOX TRUSS STRUCTURE FOUNDATION AT 45" CONCRETE BARRIER WALL

DECEMBER 2008

DRAWING NO. E 802–SBTS–17

JOHN C. MAUSER REGISTERED No. 17361 STATE OF INDIANA PROFESSIONAL ENGINEER

John C. Mauser 9/24/08

DESIGN ENGINEER DATE

DESIGNED: JCM DRAWN: REM

04-01-09

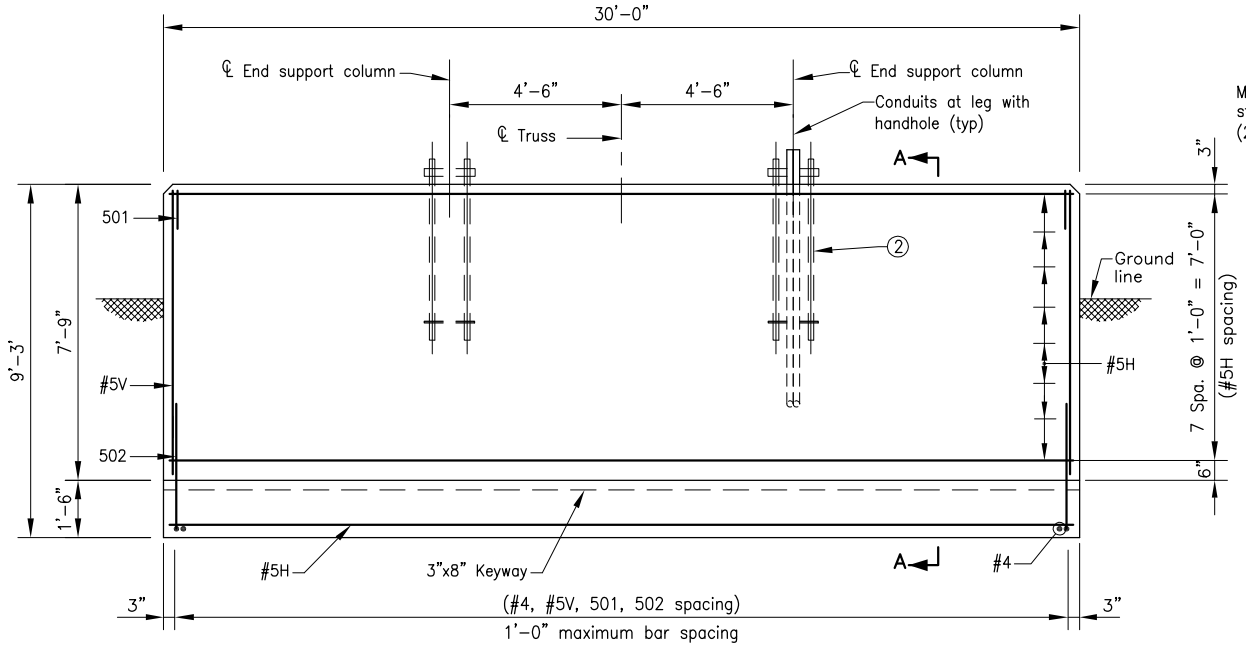

SECTION C–C

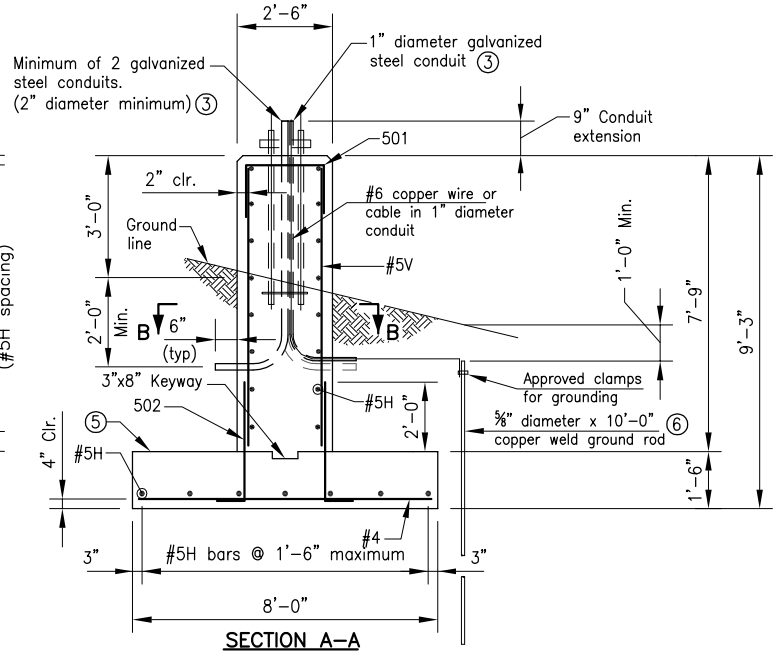

SECTION A–A

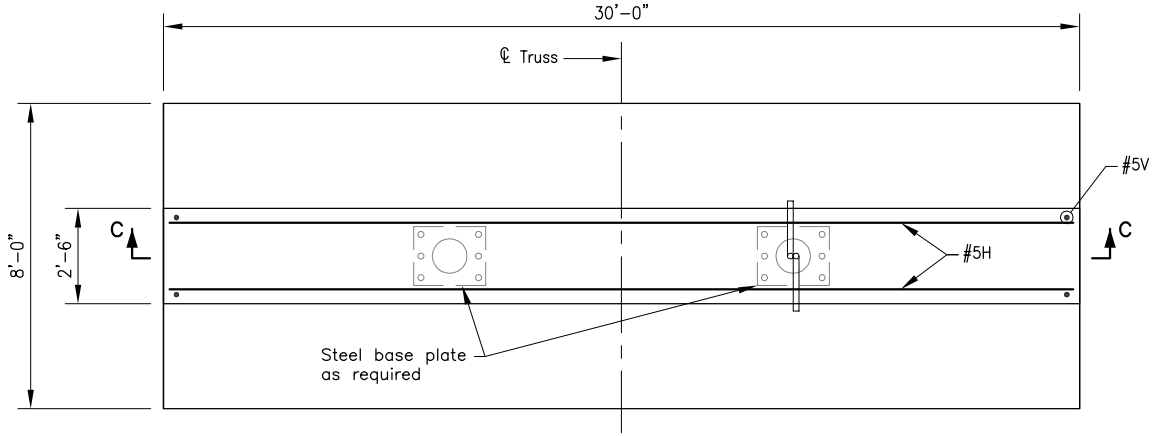

SECTIONB–B

Notes:

1 See Standard Drawing E 602–CCMB–03 for barrier wall width transition.

② See Standard Drawing E 802–SBTS–13 for anchor bolts.

③ Thread and cap both ends of steel conduit.

4 See Standard Drawing E 802–SBTS–19 for reinforcing schedule.

⑤ The top of the footing shall be a minimum of 4'–0" below the pavement or ground surface.

⑥ Only one ground rod per structure is required.

Legend:

H = Horizontal bar

V = Vertical bar

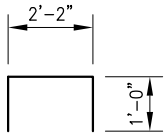

501 x 4'–2"

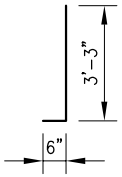

502 x 3'–9"

INDIANA DEPARTMENT OF TRANSPORTATION

SIGN BOX TRUSS STRUCTURE FOUNDATION AT 36" MEDIAN OR SHOULDER

DECEMBER 2008

DRAWING NO. E 802–SBTS–18

JOHN C. MAUSER REGISTERED No. 17361 STATE OF INDIANA PROFESSIONAL ENGINEER

John C. Mauser 9/24/08

DESIGN ENGINEER DATE

DESIGNED: JCM DRAWN: REM

FOUNDATION AT 33" CONCRETE BARRIER WALL			
EPOXY COATED REINFORCING			
SIZE & MARK	NO. OF BARS	LENGTH (FT. & IN.)	WEIGHT (LBS.)
#4	31	7 ' - 8 "	
TOTAL #4			159
501	31	4 ' - 2 "	
502	62	3 ' - 9 "	
#5V	62	6 ' - 6 "	
#5H	21	29 ' - 8 "	
TOTAL #5			1447
TOTAL EPOXY COATED REINFORCING			1606
CONCRETE			
CONCRETE , CLASS "A" (CYS)			35.8
MISCELLANEOUS			
SURFACE SEAL (SYS)			27.6

FOUNDATION AT 45" CONCRETE BARRIER WALL			
EPOXY COATED REINFORCING			
SIZE & MARK	NO. OF BARS	LENGTH (FT. & IN.)	WEIGHT (LBS.)
#4	31	7 ' - 8 "	
TOTAL #4			159
501	31	4 ' - 2 "	
502	62	3 ' - 9 "	
#5V	62	7 ' - 6 "	
#5H	23	29 ' - 8 "	
TOTAL #5			1574
TOTAL EPOXY COATED REINFORCING			1733
CONCRETE			
CONCRETE , CLASS "A" (CYS)			37.6
MISCELLANEOUS			
SURFACE SEAL (SYS)			34.3

FOUNDATION AT 36" MEDIAN OR SHOULDER			
EPOXY COATED REINFORCING			
SIZE & MARK	NO. OF BARS	LENGTH (FT. & IN.)	WEIGHT (LBS.)
#4	31	7 ' - 8 "	
TOTAL #4			159
501	31	4 ' - 2 "	
502	62	3 ' - 9 "	
#5V	62	7 ' - 6 "	
#5H	23	29 ' - 8 "	
TOTAL #5			1574
TOTAL EPOXY COATED REINFORCING			1733
CONCRETE			
CONCRETE , CLASS "A" (CYS)			34.9
MISCELLANEOUS			
SURFACE SEAL (SYS)			28.3

INDIANA DEPARTMENT OF TRANSPORTATION

SIGN BOX TRUSS STRUCTURE
SPREAD FOOTING QUANTITIES

DECEMBER 2008

DRAWING NO. E 802-SBTS-19

JOHN C. MAUSER REGISTERED No. 17361 STATE OF INDIANA PROFESSIONAL ENGINEER

John C. Mauser 9/24/08
DESIGN ENGINEER DATE

DESIGNED: JCM DRAWN: REM