Chapter 403 List of Figures

Figure Title

403-3F Seismic Analysis Requirements for Integral and Non-Integral Structures [Added Oct. 2012]

403-3.05 <u>Earthquake Effects</u> [Rev. Oct. 2012]

Earthquake Effects, EQ, should be determined in accordance with AASHTO *Guide Specifications for LRFD Seismic Bridge Design* 2nd Edition. A structure longer than than 500 ft located in an area in Seismic Design Category greater than A will be analyzed using elastic dynamic analysis. Integral structures 500 feet in length or less will not require seismic analysis provided that they are detailed in accordance to the details provided in Chapter 409. Figure 403-3F shows the requirements for seismic analysis according to structure type and length.

Seismic Design Category	Bridge Length	Integral Structure	Non-integral Structure
A	All Lengths	Detail in accordance with CH 409	In accordance with AASHTO Guide Spec
> A	≤ 500’	Detail in accordance with CH 409	In accordance with AASHTO Guide Spec
	> 500’	Elastic dynamic Analysis in accordance with AASHTO Guide Spec	Elastic Dynamic Analysis in accordance with AASHTO Guide Spec

Seismic Analysis Requirements for Integral and Non-Integral Structures

Figure 403-3F

403-3.07 Vehicle Collision with Structure [Rev. Oct. 2012]

Unless the structure is protected as specified in *LRFD* 3.6.5.1, an abutment or pier located within 30 ft of the edge of a roadway shall be designed for loads in accordance with *LRFD* 3.6.5.2. Requirements for train collision load have been removed from the *2012 LRFD.*

A mechanically-stabilized-earth-wall bridge abutment placed adjacent to a roadway need not be checked for vehicle-collision forces as described in *LRFD* 3.6.5. However, if the wall must be placed inside the clear zone, roadway safety shall be addressed as described in Chapter 49.

403-4.02 Application of Construction Loadings [Rev. Oct. 2012]

1. Component Loads, DC.
   a. DC1, Stay-in-place Formwork = 15 psf
   b. DC2, Concrete = 150 pcf

4. Wind Load, WS. Structure designed for 70 mph horizontal wind loading in accordance with *LRFD* 3.8.1.

CONSTRUCTION LOADING

The exterior girder has been checked for strength, deflection, and overturning using the constructions loads shown below. Cantilever overhang brackets were assumed for support of the deck overhang past the edge of the exterior girder. The finishing machine was assumed to be supported 6 in. outside the vertical coping form. The top overhang brackets were assumed to be located 6 in. past the edge of the vertical coping form. The bottom overhang brackets were assumed to be braced against the intersection of the girder bottom flange and web.

Deck Falsework Loads:	Designed for 15 lb/ft^2 for permanent metal stay-in-place deck forms, removable deck forms, and 2-ft exterior walkway.
Construction Live Load:	Designed for 20 lb/ft^2 extending 2 ft past the edge of coping and 75 lb/ft vertical force applied at a distance of 6 in. outside the face of coping over a 30-ft length of the deck centered with the finishing machine.
Finishing-Machine Load:	4500 lb distributed over 10 ft along the coping.
Wind Load:	Structure designed for 70 mph horizontal wind loading in accordance with *LRFD* 3.8.1.

CONSTRUCTION-LOADINGS INFORMATION TO BE SHOWN ON GENERAL PLAN

Figure 403-4A

406-4.02 Normal-Weight and Lightweight Concrete [Rev. Oct. 2012]

The minimum f'_c for prestressed or post-tensioned concrete components shall be shown on the plans. Such a strength outside the range shown in Section 406-1.0 is not permitted without written approval of the Director of Bridges. For lightweight concrete, the air dry unit weight shall be shown on the plans as 119 lb/ft^3. The modulus of elasticity will be calculated using the 119 lb/ft^3 value. The unit weight of the lightweight concrete will be taken as 124 lb/ft^3. The additional weight is to account for the mild reinforcing steel and the tensioning strands. See *LRFD* 5.4.2.2 for the coefficient of linear expansion.

The following will apply to concrete.

1. The design compressive strength of normal-weight and lightweight concrete at 28 days, f'_c, shall be in the range as follows:

406-4.03 Lightweight Concrete [Rev. Oct. 2012]

The use of lightweight concrete, with normal-weight sand mixed with lightweight coarse aggregate, is permitted with a specified density of 119 lb/ft^3. The use of lightweight concrete shall be demonstrated to be necessary and cost effective during the structure-size-and-type study.

The modulus of elasticity will be less than that for normal-weight concrete. Creep, shrinkage, and deflection shall be appropriately evaluated and accounted for if lightweight concrete is to be used. The formula shown in *LRFD* 5.4.2.6 shall be used in lieu of physical test values for modulus of rupture. The formula for sand-lightweight concrete shall be used for lightweight concrete.

406-12.02(03) Indiana Bulb-Tee Beam [Rev. Oct. 2012]

See Figures 406-14A through 406-14F, and 406-14M through 406-14R, for details and section properties. For a long-span bridge, bulb-tee beams with a top-flange width of 60 in. shall be considered for improved stability during handling and transporting. Draped strands may be considered for use in a bulb-tee beam, but shall only be considered if tensile stresses in the top of the beam near its end are exceeded if using straight strands. The maximum allowable compressive strength, tensile strength, extent of strand debonding, and number of top strands shall be considered in evaluating the need for draped strands. If draped strands are used, the maximum allowable hold-down force per strand shall be 3.8 kip, with a maximum total hold-down force of 38 kip. For additional information on draped strands, see Section 406-12.03.

Lightweight concrete may be used for this type of beam if it is economically justified. See Section 406-4.03.

408-2.01(04) <u>Sliding Stability and Eccentricity</u> [Rev. Oct. 2012]

The soil parameters shall be provided for calculating frictional sliding resistance and active and passive earth pressures as follows:

Soil Unit Weight, γ, for soil above footing base;
Soil Friction Angle, φ, for soil above footing base;
Active Earth Pressure Coefficient, K_a;
Passive Earth Pressure Coefficient, K_p; and
Coefficient of Sliding, tan δ.

The eccentricity of loading at the Strength Limit state, evaluated based on factored loads shall not exceed the following:

1. 1/3 of the corresponding dimension *B* or *L* for a footing on soil; or

2. 0.45 of the corresponding dimensions *B* or *L* for a footing on rock.

Chapter 409 List of Figures

Figure	Title
409-2A	Use of Integral Abutment [Rev. Oct. 2012]
409-2B	Intermediate Pier Detail for Integral Structure Located in Seismic Area with Seismic Design Category Greater than A [Added Oct. 2012]
409-2C	Suggested Integral Abutment Details, Method A, Beams Attached Directly to Piling [Rev. Oct. 2012]
409-2D	Suggested Integral Abutment Details, Method B, Beams Attached to Concrete Cap [Rev. Oct. 2012]
409-2E	Spiral Reinforcement [Added Oct. 2012]
409-2F	Tooth Joint [Added Oct. 2012]
409-2G	Integral Abutment Placed Behind MSE Wall [Added Oct. 2012]

409-2.0 INTEGRAL ABUTMENT [REV. OCT. 2012]

409-2.01 General [Rev. Oct. 2012]

An integral abutment eliminates the expansion joint in the bridge deck, which reduces both the initial construction costs and subsequent maintenance costs.

Integral abutments shall be used for a new structure in accordance with the geometric limitations provided in Figure 409-2A. Minimum support-length requirements need not to be investigated for an integral-abutments bridge. An integral structure of length of 500 ft or less will not require seismic analysis, provided the abutment is detailed in accordance with the information provided in this chapter. An integral structure of 500 ft or longer located in an area in a seismic design category greater than A will be analyzed using elastic dynamic analysis.

For additional information and research supporting INDOT's integral abutment design philosophy, see the following publications:

1. Frosch, R.J., V. Chovichien, K. Durbin, and D. Fedroff. *Jointless and Smoother Bridges: Behavior and Design of Piles*. Publication FHWA/IN/JTRP-2004/24. Joint Transportation Research Program, Indiana Department of Transportation and Purdue University, West Lafayette, Indiana, 2006. This study investigates the fundamental principals affecting the integral abutment, gives recommendations concerning minimum pile depths, and recommends the limits of use be extended to 500 feet.

2. Frosch, R.J., Kreger, M.E., and A.M. Talbott. *Earthquake Resistance of Integral Abutment Bridges*. Publication FHWA/IN/JTRP-2008/11. Joint Transportation Research Program, Indiana Department of Transportation and Purdue University, West Lafayette, Indiana, 2009. This study investigates the seismic resistance of the integral abutment.
3. Frosch, R.J. and M.D. Lovell. *Long-Term Behavior of Integral Abutment Bridges*. Joint Transportation Research Program, Indiana Department of Transportation and Purdue University, West Lafayette, Indiana, 2011. This study extends the previous two studies to further investigate skew and detailing of the integral abutment.

409-2.03(02) Passive Earth Pressure [Rev. Oct. 2012]

The restraining effect of passive earth pressure behind the abutments may be neglected in considering superstructure longitudinal force distribution to the interior piers. Alternatively, the effect of passive earth pressure behind the abutments may be considered by distributing the longitudinal forces between the interior supports, abutment supports, and the soil behind the abutments.

409-2.04(01) General Requirements [Rev. Oct. 2012]

2. Bridge Approach. A reinforced-concrete bridge approach, anchored to the abutment with #5 bars, epoxy coated, and spaced at 1'-0" centers, shall be used at each integral abutment regardless of the traffic volume. The bars shall extend out of the pavement ledge as shown in Figures 409-2C and 409-2D. Two layers of polyethylene sheeting shall be placed between the reinforced-concrete bridge approach and the subgrade. A rigid reinforced-concrete bridge approach is necessary to prevent compaction of the backfill behind the abutment.

3. Bridge-Approach Joint. For a structure of length of less than 300 ft, a terminal joint of 2 ft width, as shown on the INDOT *Standard Drawings*, or a pavement-relief joint, should be placed at the end of the reinforced-concrete bridge approach. An expansion joint should be considered for an integral structure having length from 300 ft to 500 ft. An expansion joint is required for an integral structure of length greater than 500 ft, as shown in Figure 409-2F.

7. Intermediate Pier Details for Integral Structure Located in Seismic Area with Seismic Design Category Greater than A. Intermediate piers should include concrete restrainers as shown in Figure 409-2B.

409-2.04(02) Pile Connection and Plans Details [Rev. Oct. 2012]

An integral abutment may be constructed using either of the methods as follows (see Figures 409-2C and 409-2D).

1. Method A. The superstructure beams are placed on and attached directly to the abutment piling. The entire abutment is then poured at the same time as the superstructure deck. This is the preferred method.

2. Method B. The superstructure beams are set in place and anchored to the previously cast-in-place abutment cap. The concrete above the previously cast-in-place cap shall be poured at the same time as the superstructure deck.

Optional construction joints may be placed in the abutment cap to facilitate construction. An optional joint below the bottom of the beam may be used regardless of bridge length. The optional construction joint at the pavement-ledge elevation shown in Figures 409-2C and 409-2D allows the contractor to pour the reinforced-concrete bridge approach with the bridge deck.

Regardless of the method used, the abutment shall be in accordance with the following.

1. Width. The width shall not be less than 2.5 ft.

2. Cap Embedment. The embedment of the piles into the cap shall be 2 ft. The embedded portion of the pile should be confined with spiral reinforcement as shown in Figure 409-2E.

10. If placed behind an MSE retaining wall, the abutment should be configured as shown in Figure 409-2G.

409-4.03(01) Construction Joint [Rev. Oct. 2012]

The following applies to a construction joint at a spill-through end bent.

1. Type. Construction joint type A shall be used for each horizontal construction joint. See the INDOT *Standard Drawings*.

2. Integral. See Figures 409-2C and 409-2D for construction-joint use at an integral abutment.

409-5.01 General [Rev. Oct. 2012]

See Chapter 402 and *LRFD* 11.6 for more information on the selection and design of abutments.

An abutment functions as both an earth-retaining and vertical-load-carrying structure. A parapet abutment is designed to accommodate thermal movements with strip-seal expansion devices between the concrete deck and abutment end block. An integral abutment shall be designed to accommodate movements at the roadway end of the approach panel.

A mechanically-stabilized-earth-wall bridge abutment placed adjacent to a roadway need not to be checked for vehicle-collision forces as described in *LRFD* 3.6.5. However, if the wall must be placed inside the clear zone, roadside safety shall be addressed.

A mechanically-stabilized-earth-wall bridge abutment placed adjacent to a railroad track shall be in accordance with Section 409-6.03(03).

409-6.03(02) Roadway-Grade Separation [Rev. Oct. 2012]

A new-bridge pier located within 30 ft of the edge of roadway shall be designed for a vehicular collision-static force of 600 kip, as indicated in *LRFD* 3.6.5.1.

409-6.03(03) Railroad-Grade Separation [Rev. Oct. 2012]

A pier within 25 ft of a present-track or a future-track centerline shall be designed in accordance with the AREMA *Manual for Railway Engineering*.

409-7.03(03) Determining Standard Bearing-Device Type [Rev. Oct. 2012]

The procedure for determining the applicable standard elastomeric bearing device is the same for each structural-member type.

Determine the dead-load plus live-load reaction, and calculate the maximum expansion length for the bridge at the support for which the device is located. Then enter Figure 409-7B, 409-7C, 409-7D, or 409-7E, Elastomeric Bearing Pad or Assembly Types, Properties, and Allowable Values, for the appropriate structural-member type, with the reaction and maximum expansion

length. The required bearing-device size is that which corresponds to the reaction and expansion-length values shown in the figure which are less than or equal to those determined. If the reaction or expansion length is greater than the figure's value, use the next larger device size. If the reaction or expansion length is greater than the maximum value shown on the figure, the pad must be properly resized and designed.

The maximum service limit state rotation due to total load, Θ_s, shall be calculated in accordance with *LRFD* 14.4.2.1.

The requirement for a tapered plate shall be determined in accordance with *LRFD* 14.8.2.

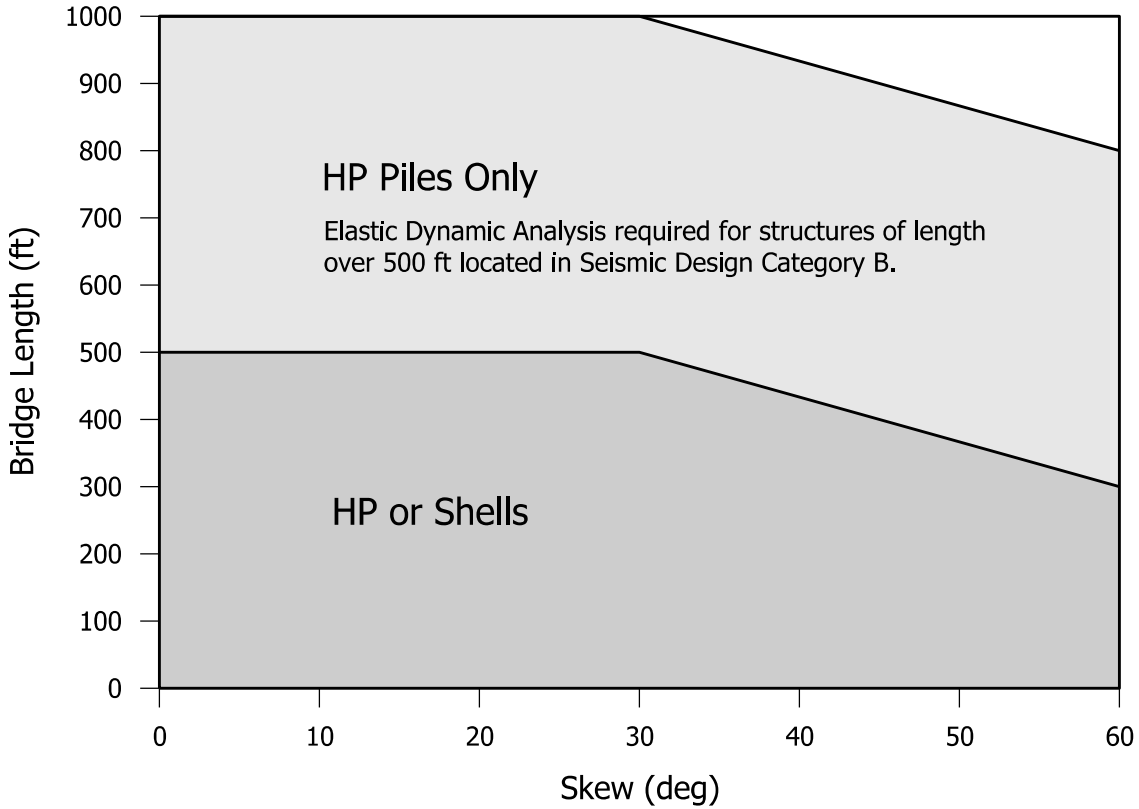

NOTES:

1. Integral abutments may be used in a curved-alignment or curved-girder structure with length of 500 feet or less, with a subtended angle in plan not greater than 30°.

2. Pile confinement spiral reinforcement required on all integral abutments.

USE OF INTEGRAL ABUTMENT

Figure 409-2A

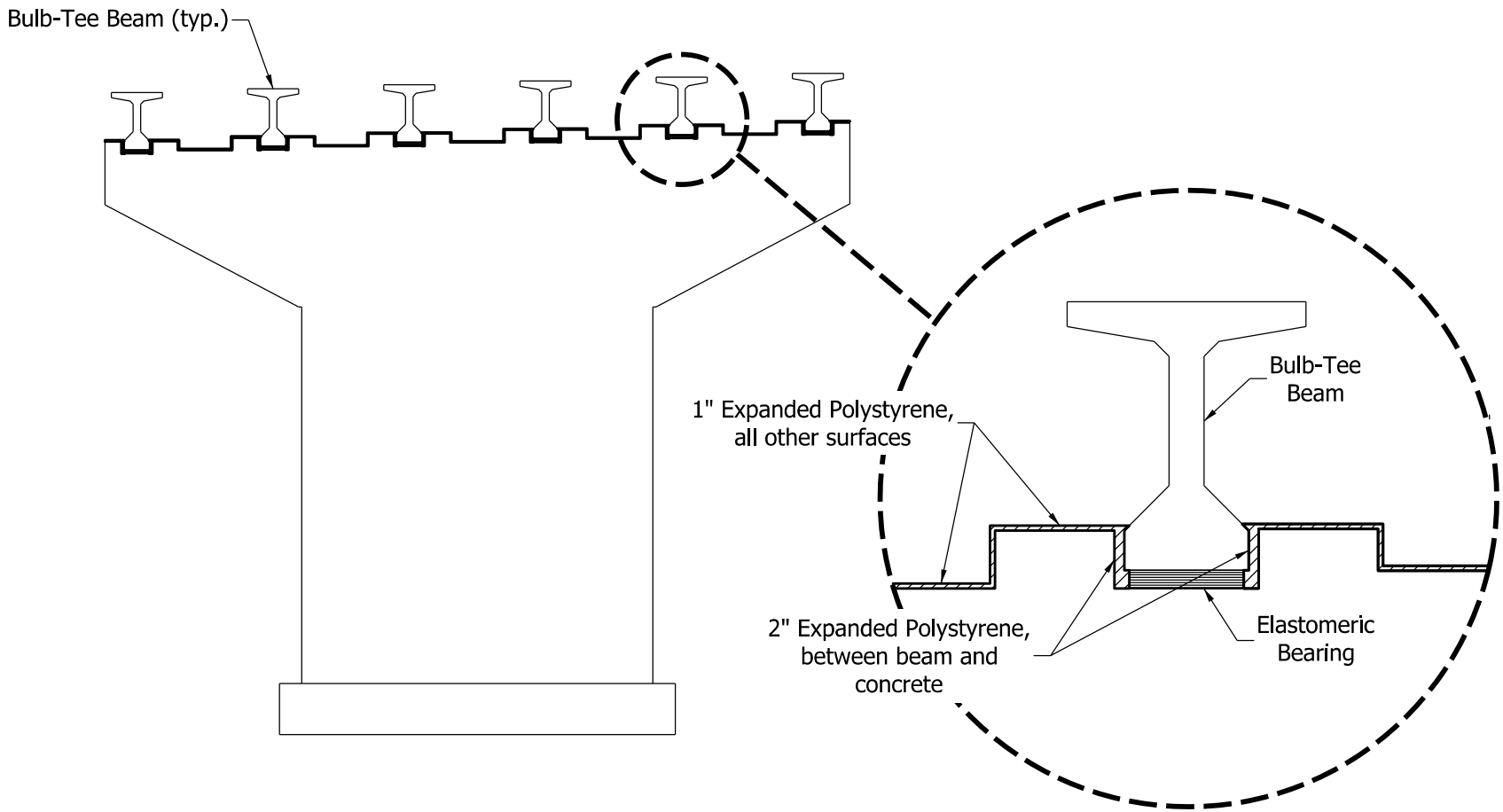

INTERMEDIATE PIER DETAIL FOR INTEGRAL STRUCTURE
LOCATED IN SEISMIC AREA WITH SEISMIC-DESIGN CATEGORY GREATER THAN A

Figure 409-2B

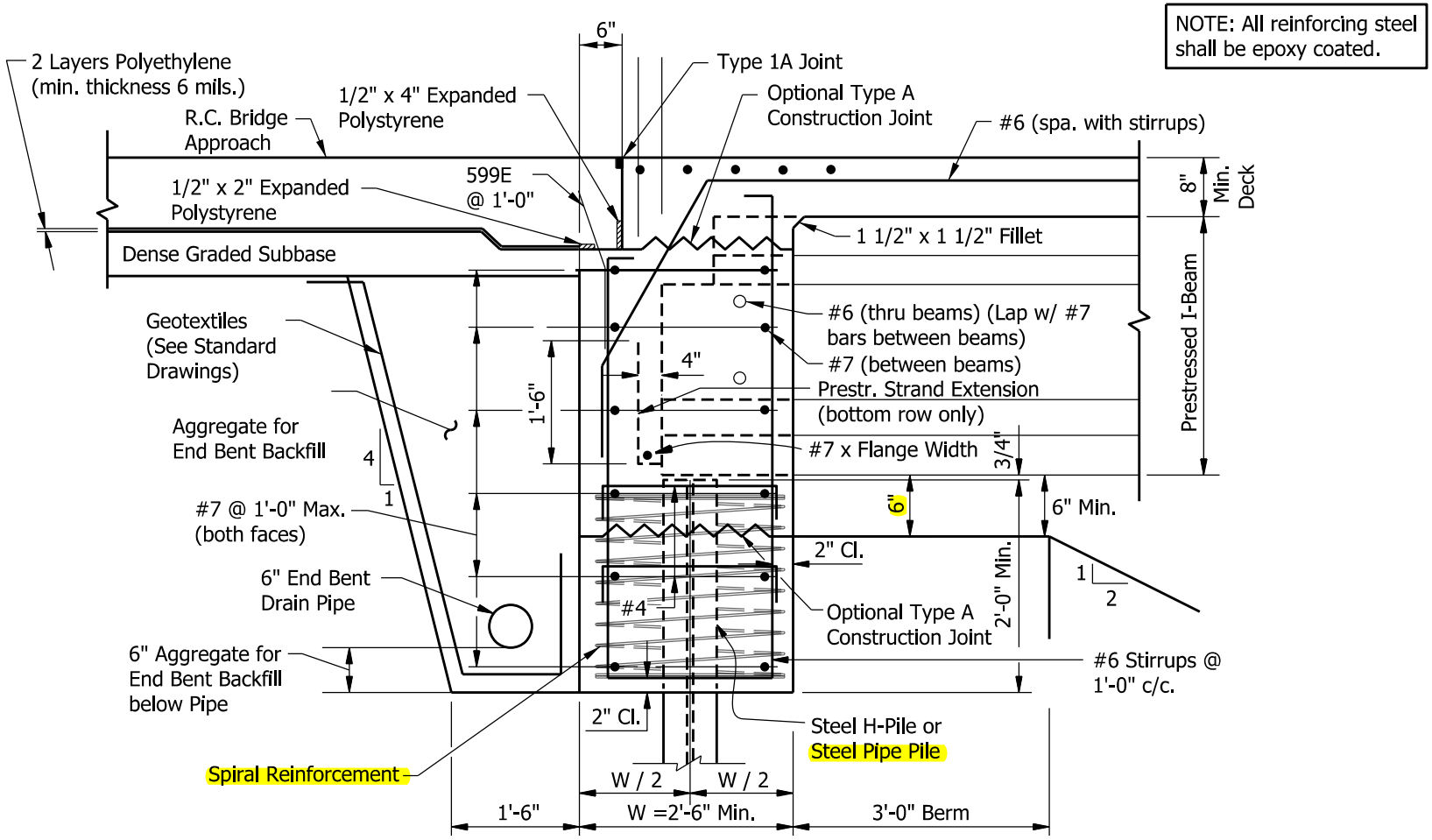

PRESTRESSED CONCRETE I-BEAM

SUGGESTED INTEGRAL ABUTMENT DETAILS
Method A, Beams Attached Directly to Piling

Figure 409-2C
(Page 1 of 4)

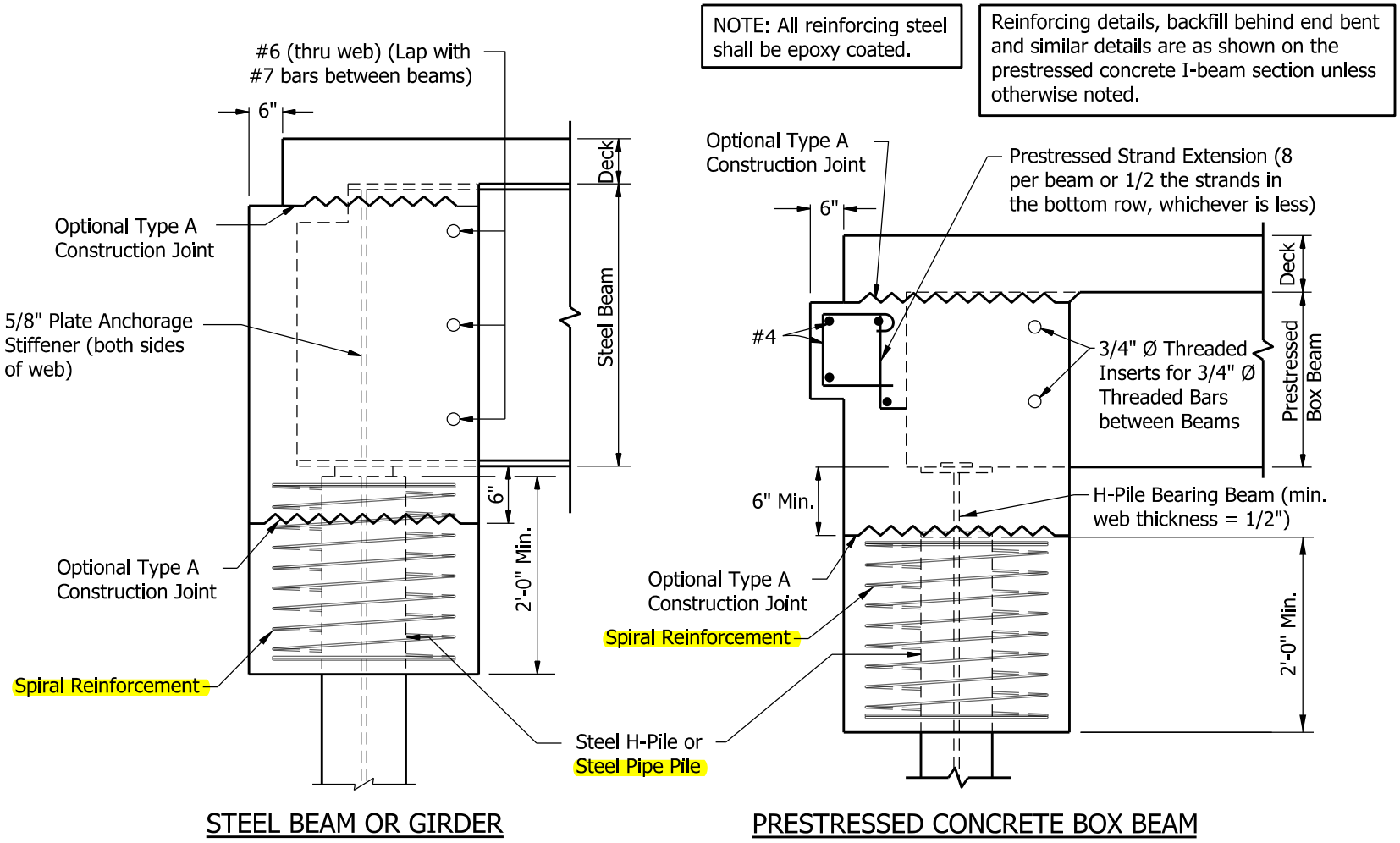

STEEL BEAM OR GIRDER

PRESTRESSED CONCRETE BOX BEAM

SUGGESTED INTEGRAL ABUTMENT DETAILS
Method A, Beams Attached Directly to Piling

Figure 409-2C
(Page 2 of 4)

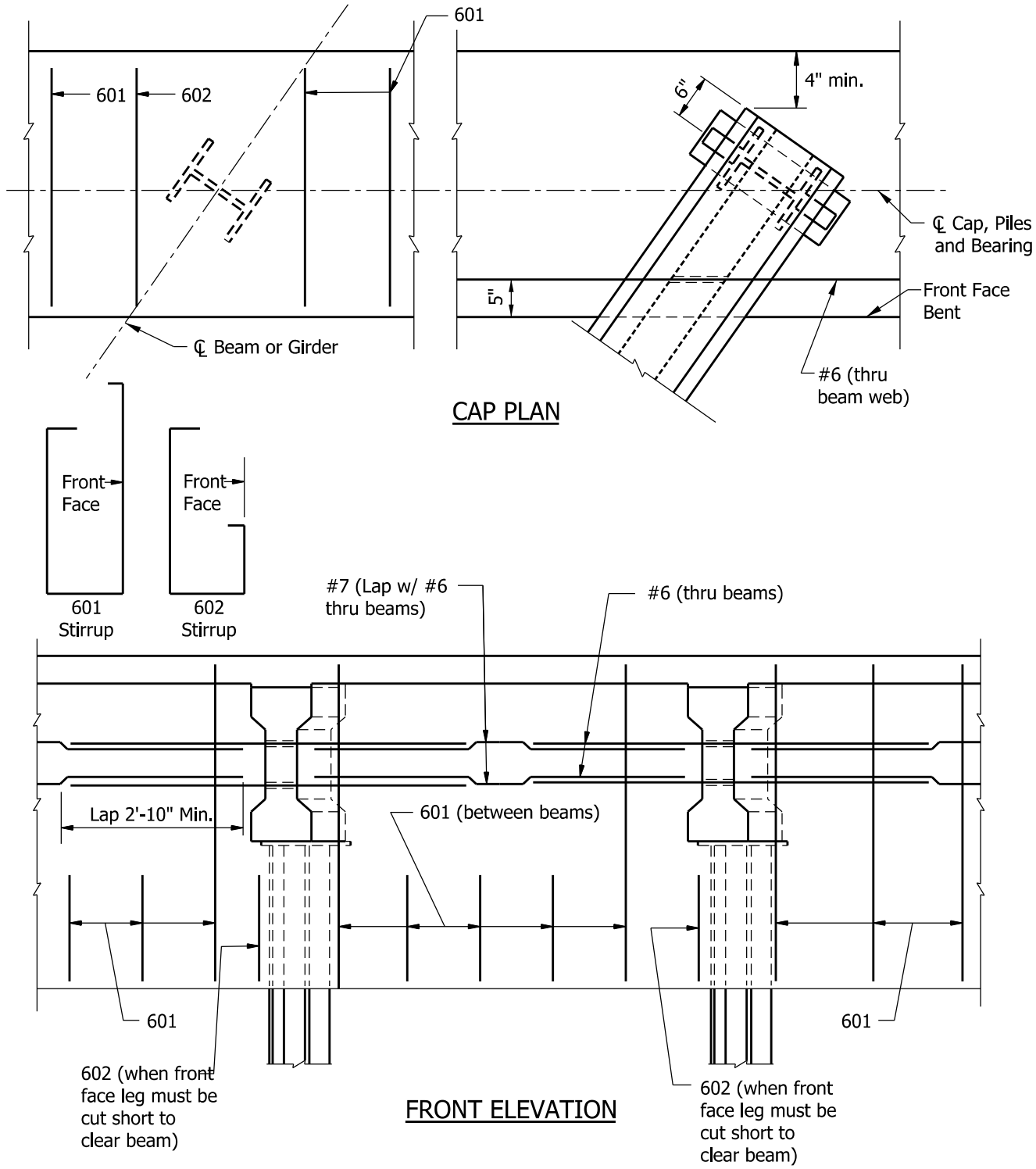

SUGGESTED INTEGRAL ABUTMENT DETAILS
Method A, Beams Attached Directly to Piling

Figure 409-2C
(Page 3 of 4)

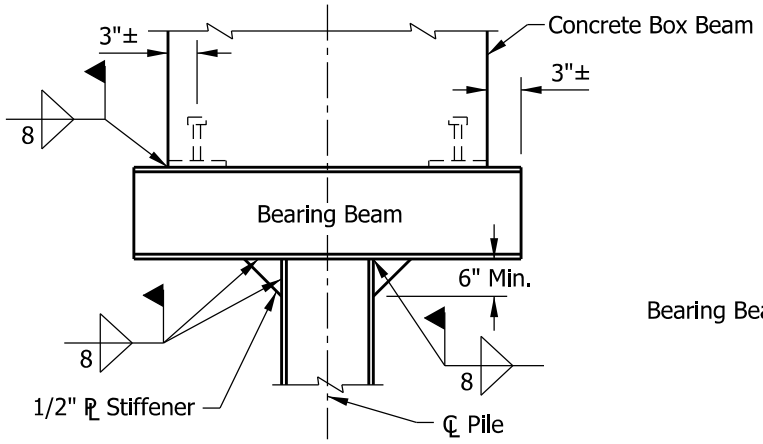

CONCRETE BOX BEAM
END VIEW

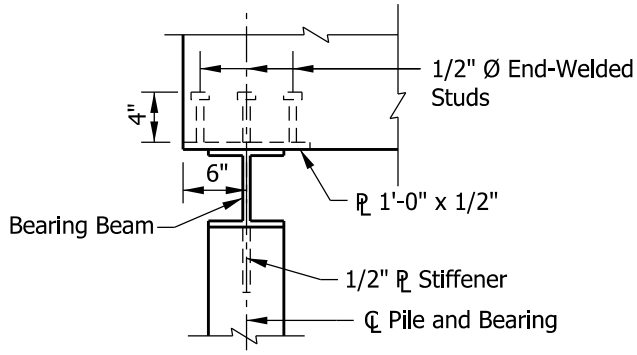

CONCRETE BOX BEAM
SIDE VIEW

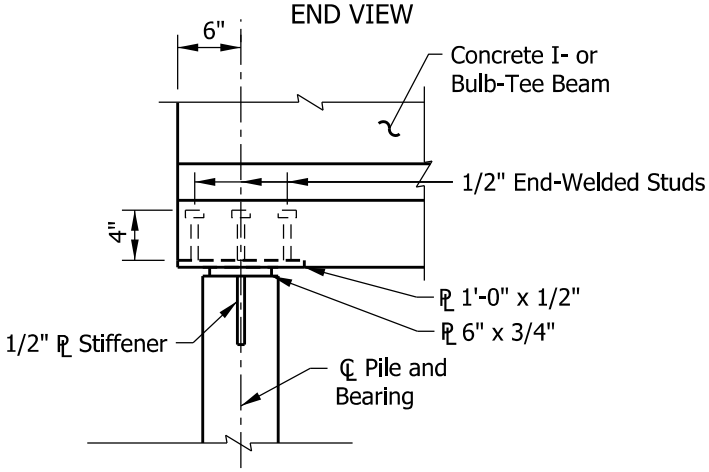

CONCRETE I- OR BULB-TEE BEAM
SIDE VIEW

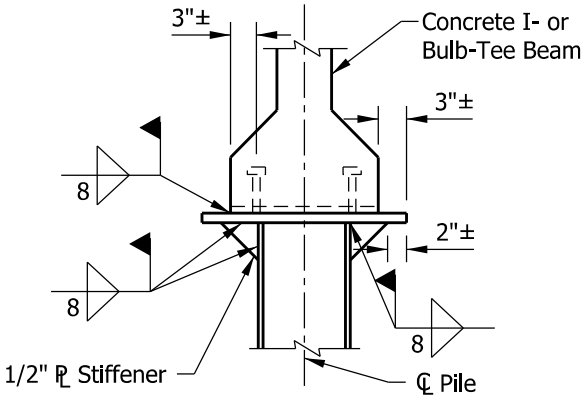

CONCRETE I- OR BULB-TEE BEAM
END VIEW

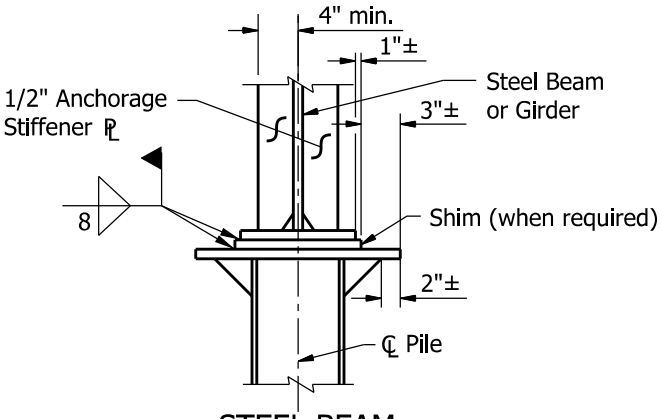

STEEL BEAM
END VIEW

SUGGESTED INTEGRAL ABUTMENT DETAILS
Method A, Beams Attached Directly to Piling

Figure 409-2C
(Page 4 of 4)

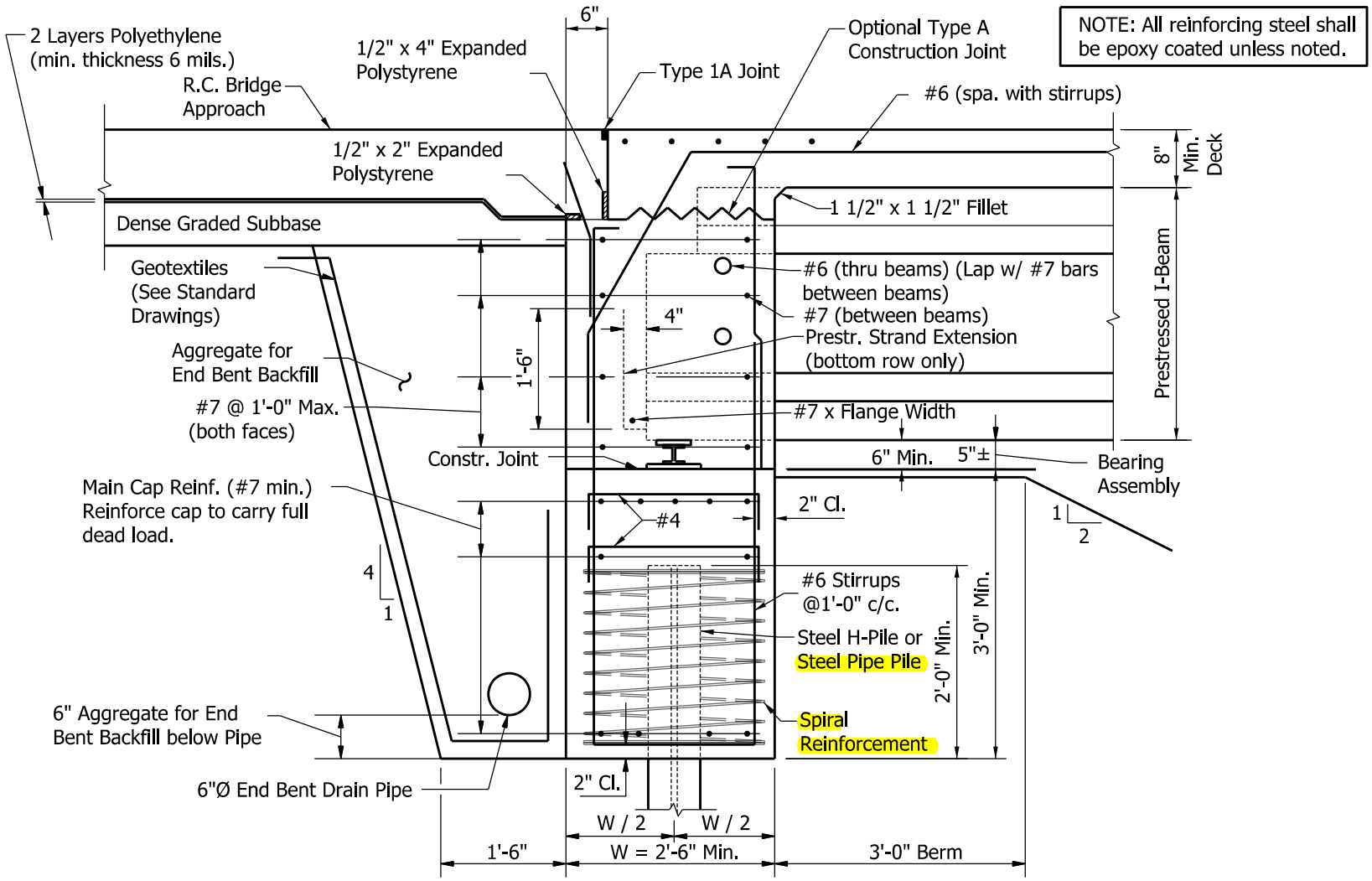

PRESTRESSED CONCRETE I-BEAM

SUGGESTED INTEGRAL ABUTMENT DETAILS
Method B, Beams Attached to Concrete Cap

Figure 409-2D
(Page 1 of 4)

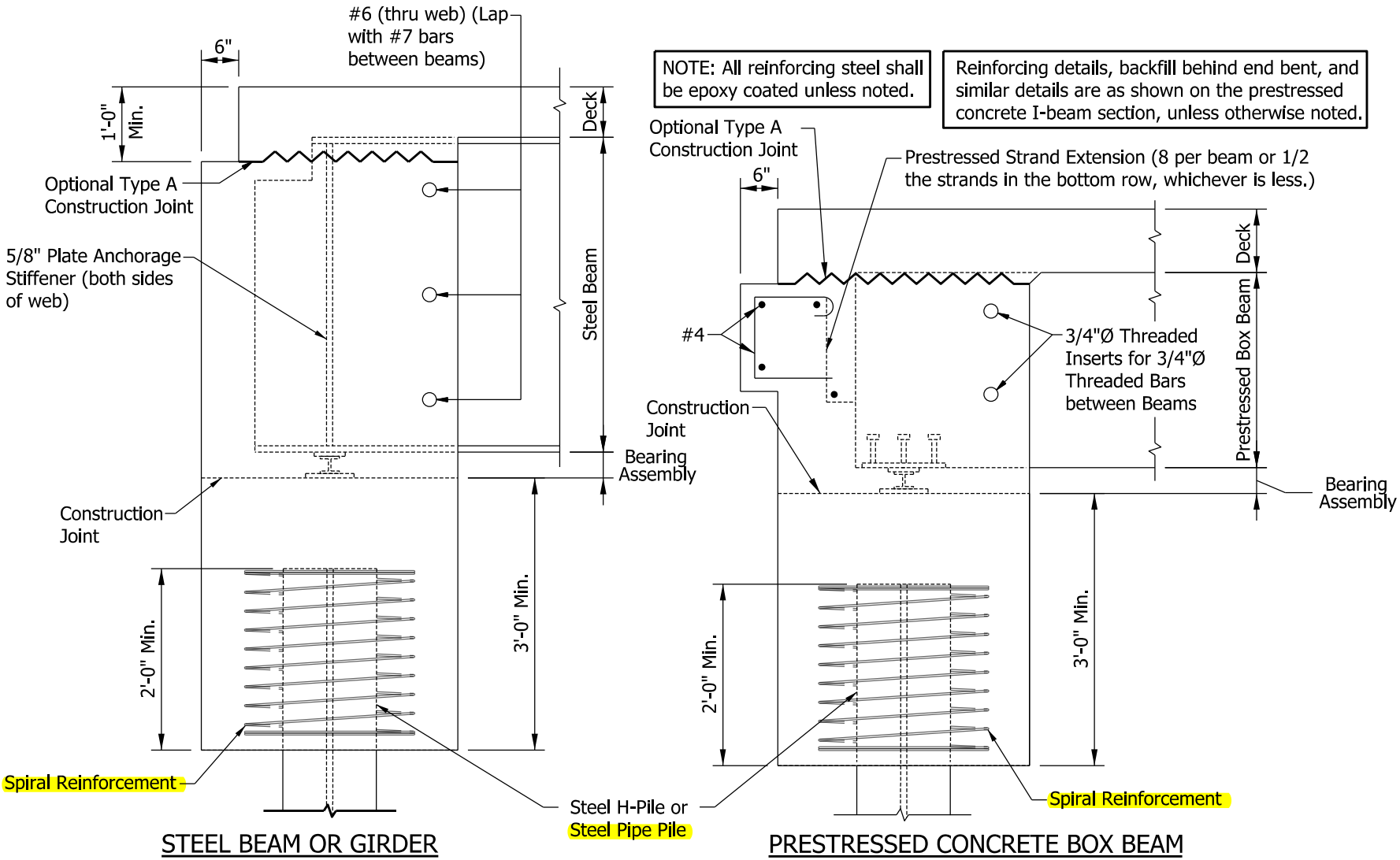

SUGGESTED INTEGRAL ABUTMENT DETAILS
Method B, Beams Attached to Concrete Cap

Figure 409-2D
(Page 2 of 4)

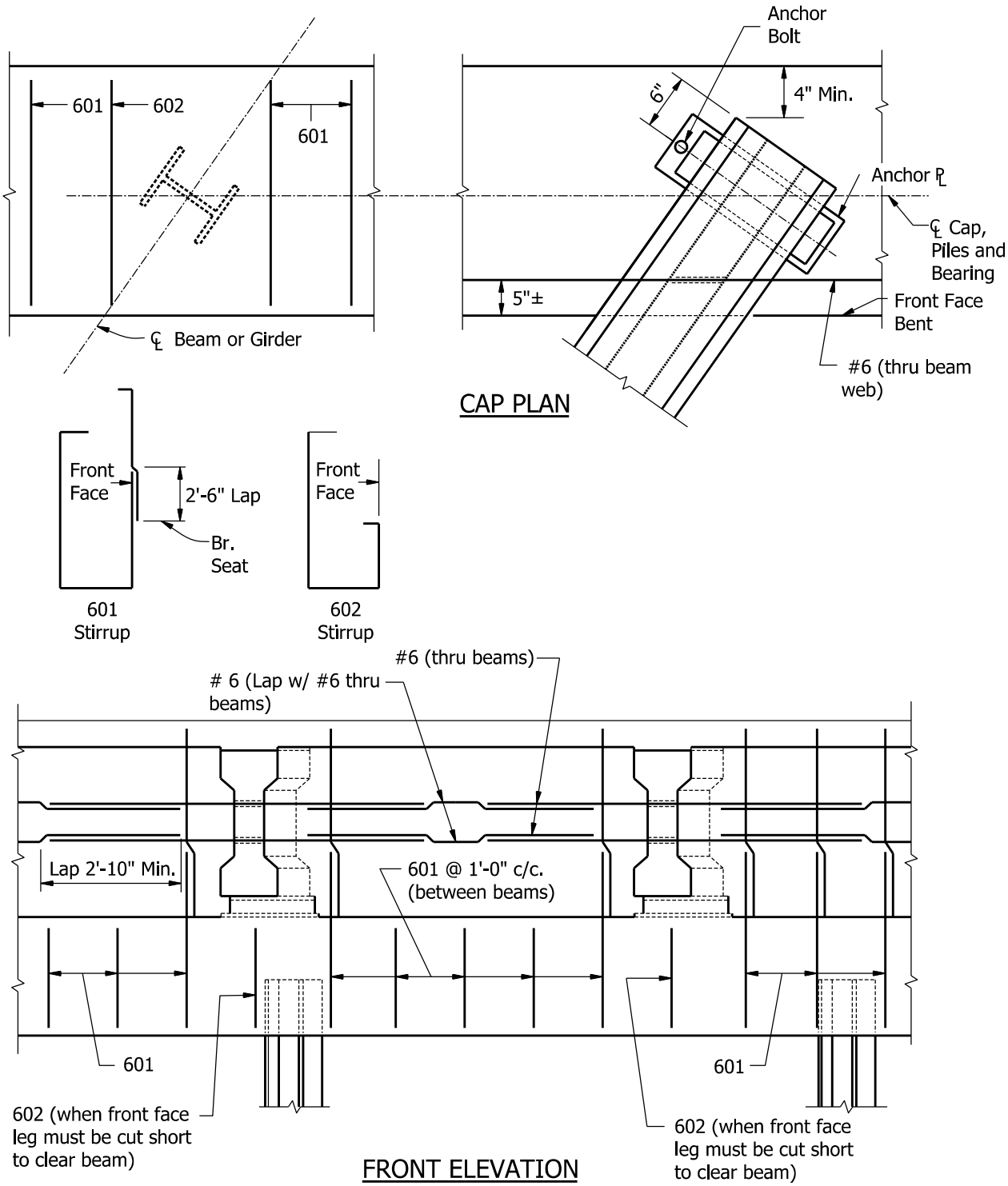

SUGGESTED INTEGRAL ABUTMENT DETAILS
Method B, Beams Attached to Concrete Cap

Figure 409-2D
(Page 3 of 4)

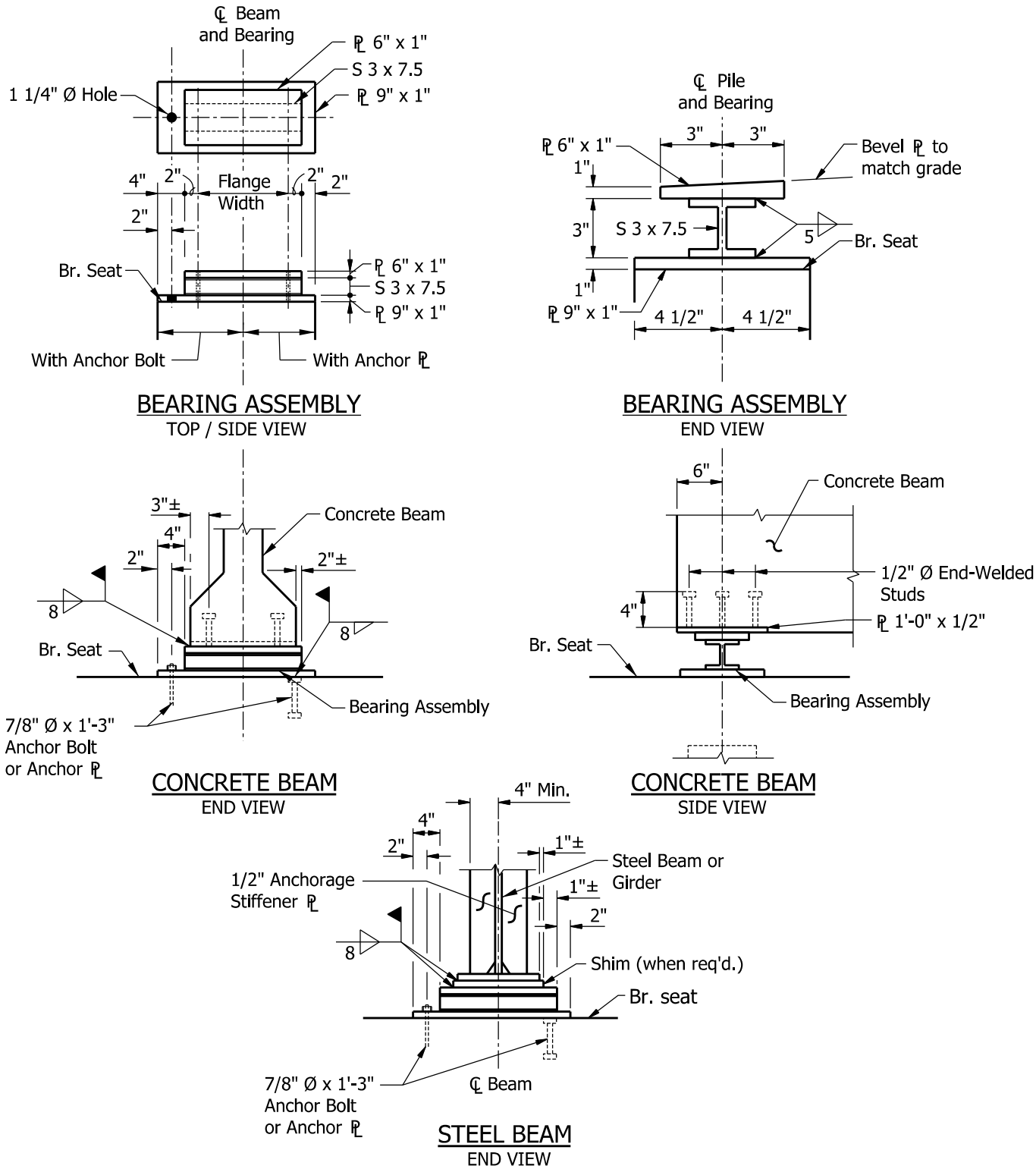

SUGGESTED INTEGRAL ABUTMENT DETAILS
Method B, Beams Attached to Concrete Cap

Figure 409-2D
(Page 4 of 4)

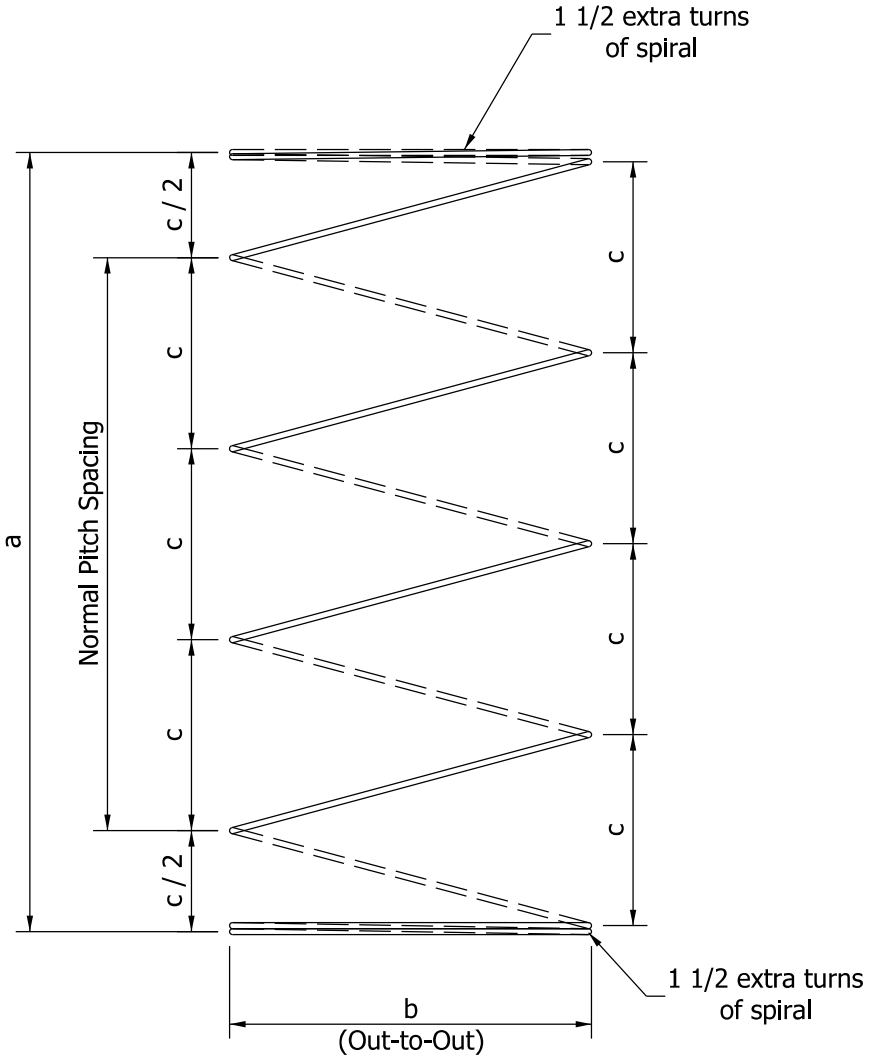

KEY:

a = Spiral Height
b = Outside Diameter
c = Pitch
d = Bar Diameter
L = Total Length of Spiral Reinforcement

$L = [(a / c + 2(1\ 1/2 \text{ turns})]\ \pi\ b$

SPIRAL REINFORCEMENT

Figure 409-2E

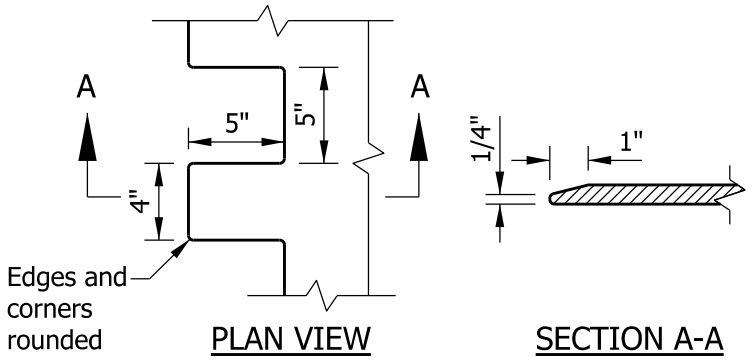

TOOTH DETAIL

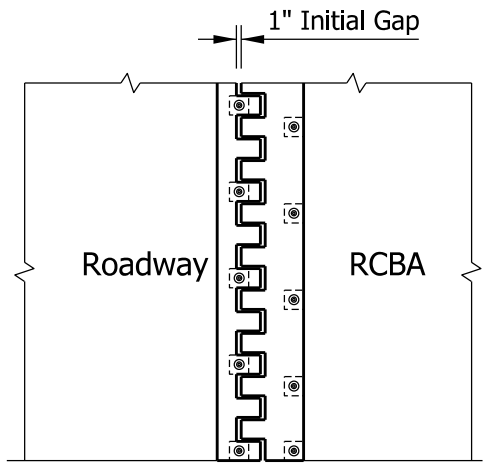

PLAN VIEW

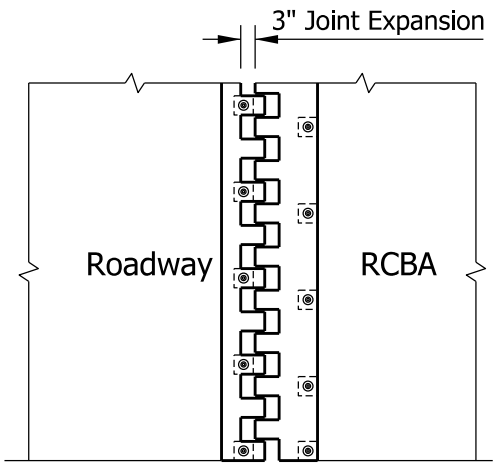

PLAN VIEW

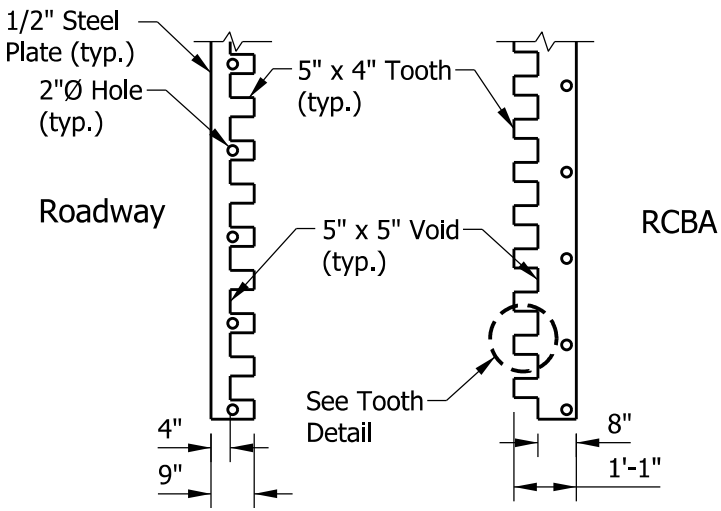

PRE-INSTALLATION TOOTH-JOINT COMPONENTS

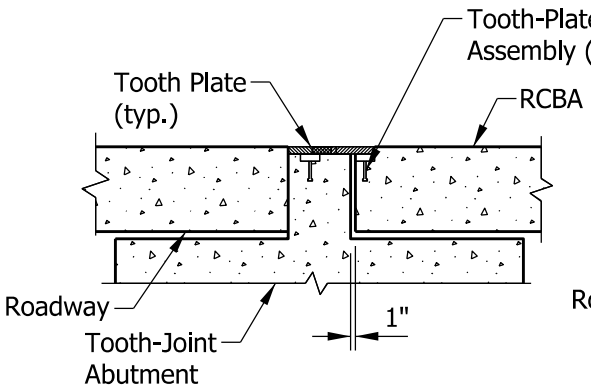

END VIEW

INSTALLED TOOTH JOINT, INITIAL, CLOSED

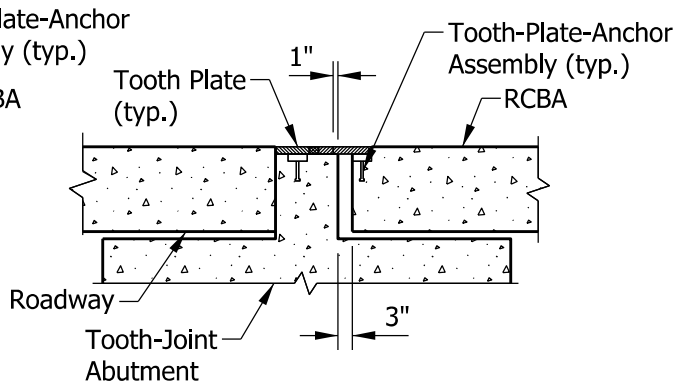

END VIEW

INSTALLED TOOTH JOINT, EXPANDED, OPEN

TOOTH JOINT
Figure 409-2F
(Page 1 of 4)

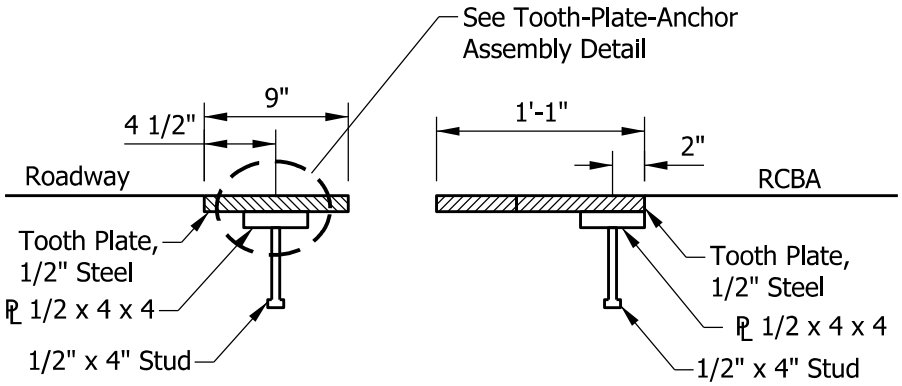

PLATE-STUD DETAIL

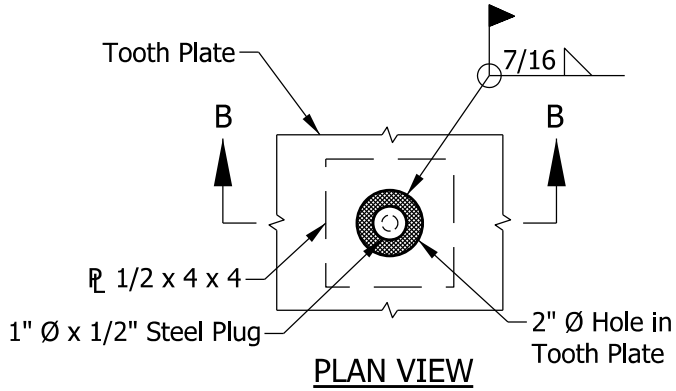

PLAN VIEW

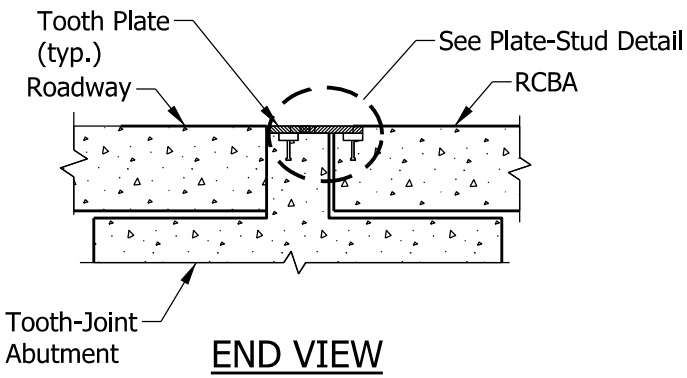

END VIEW

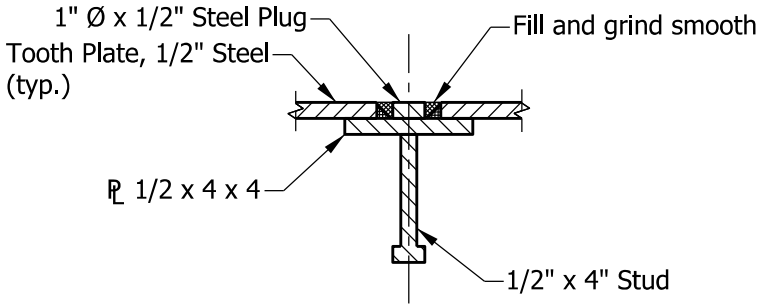

SECTION B-B

TOOTH-PLATE-ANCHOR ASSEMBLY

TOOTH JOINT
Figure 409-2F
(Page 2 of 4)

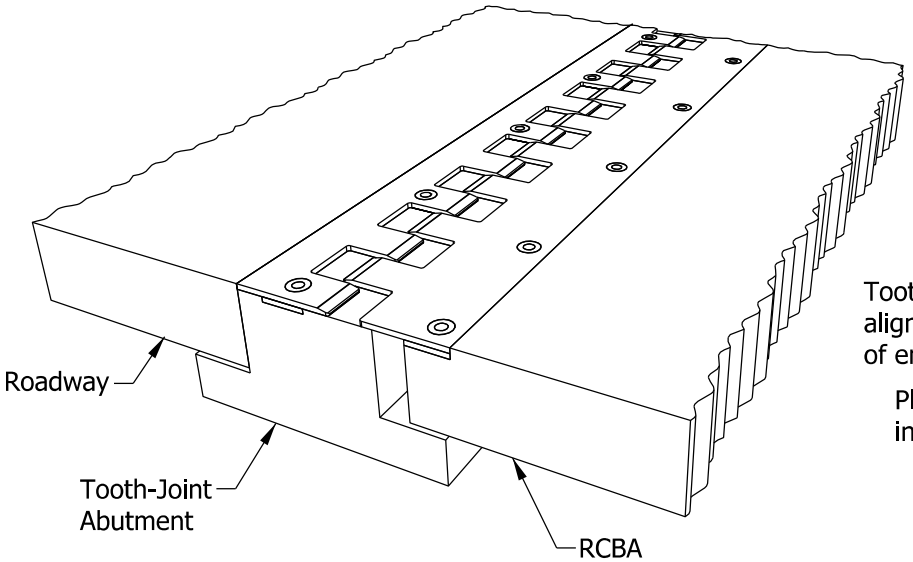

ASSEMBLED TOOTH JOINT
EXPANDED POSITION

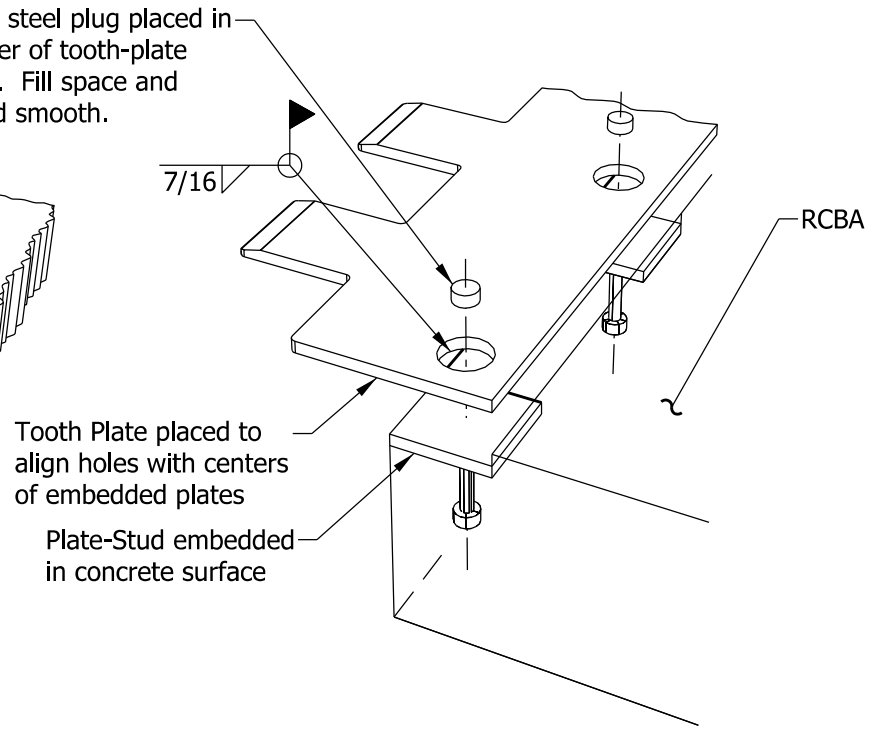

TOOTH-PLATE-ANCHOR ASSEMBLY
EXPLODED VIEW

TOOTH JOINT
Figure 409-2F
(Page 3 of 4)

QUANTITIES FOR ONE RUNNING FOOT OF ABUTMENT	
Concrete, Class C	0.30 CFT
Reinforcing Bars	32.9 LBS

NOTE: All reinforcing bars shall be epoxy coated.

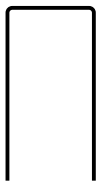

491 x 3'-9"

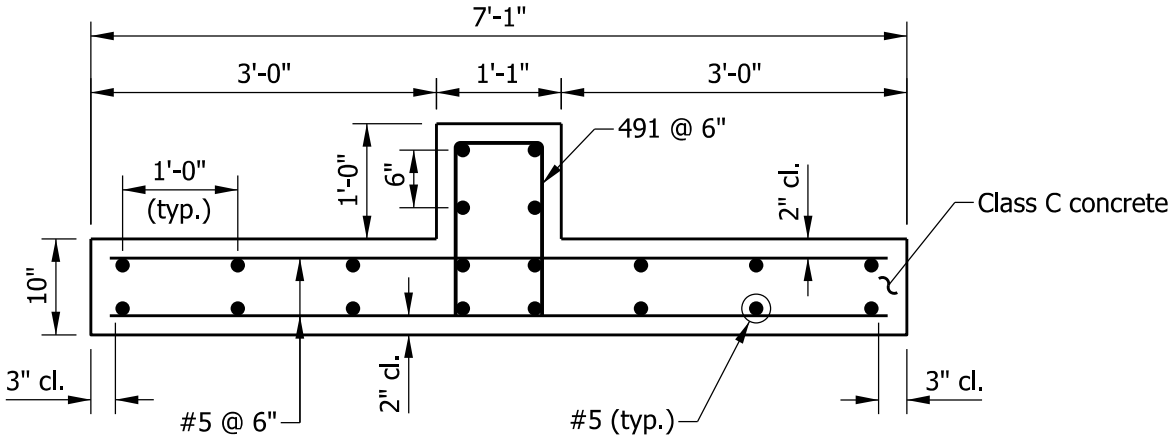

SECTION A-A

TOOTH-JOINT ABUTMENT
Figure 409-2F
(Page 4 of 4)

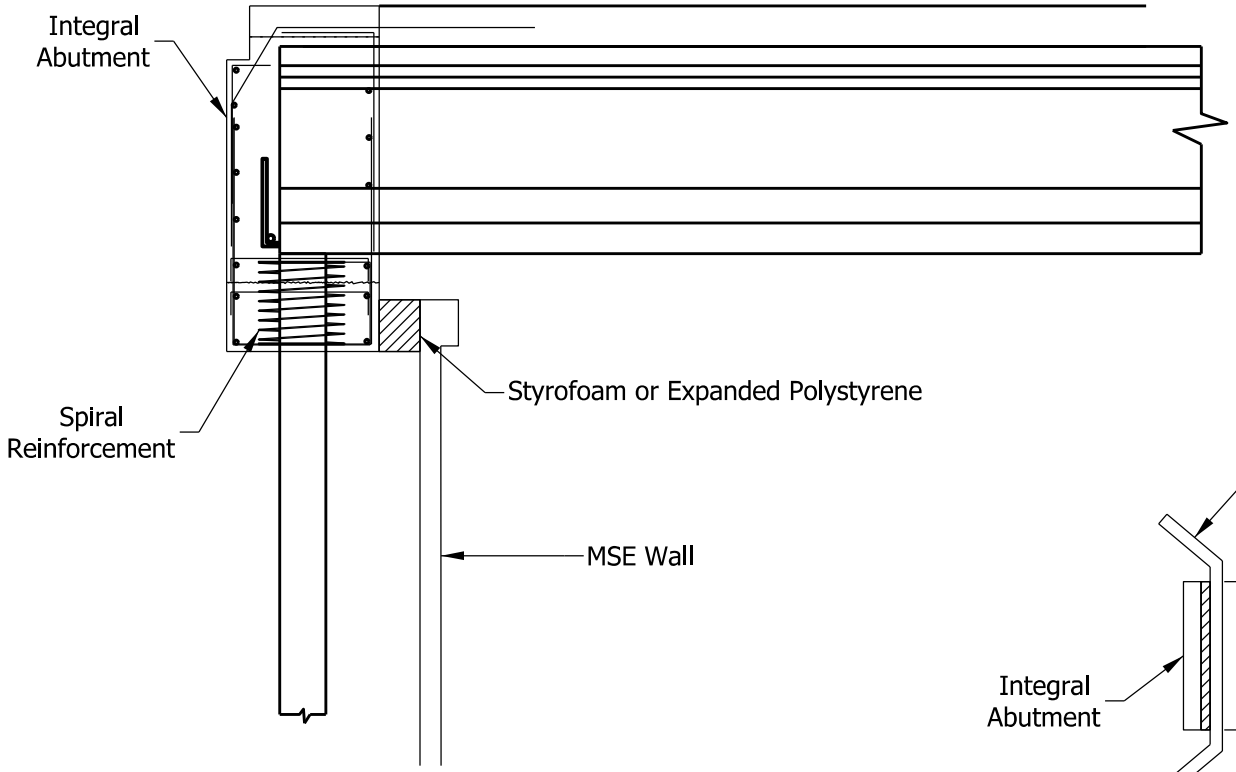

NOTE:
Coarse aggregate and 6" end-bent drain pipe are not required for abutment on MSE wall.

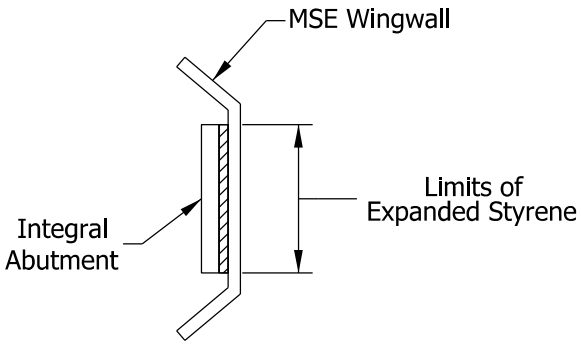

PLAN VIEW

INTEGRAL ABUTMENT PLACED BEHIND MSE WALL

Figure 409-2G

410-6.04(05) Limiting Eccentricity Due to Overturning [Rev. Oct. 2012]

Resistance to limiting eccentricity due to overturning is provided by the infill within the module. In performing a sliding analysis, the following shall be considered.

1. Eccentricity shall be evaluated at the Strength Limit state.

2. The requirements of *LRFD* 10.6.3 and 11.11.4.4 will apply.

3. Calculation methods are similar to those for a cast-in-place concrete wall.

4. Load factors shall be as shown in *LRFD* Figure C11.5.6-2.

5. The location of the resultant of the reaction forces shall be within the middle two-thirds of the base width.