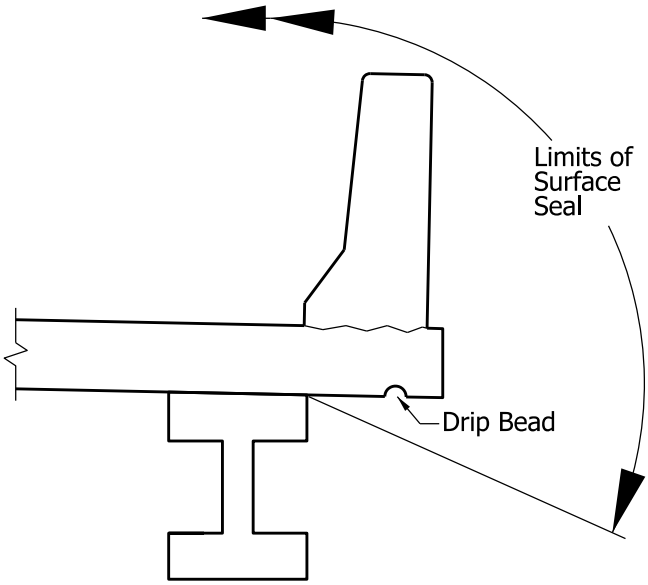

BRIDGE WITH STRUCTURAL MEMBERS

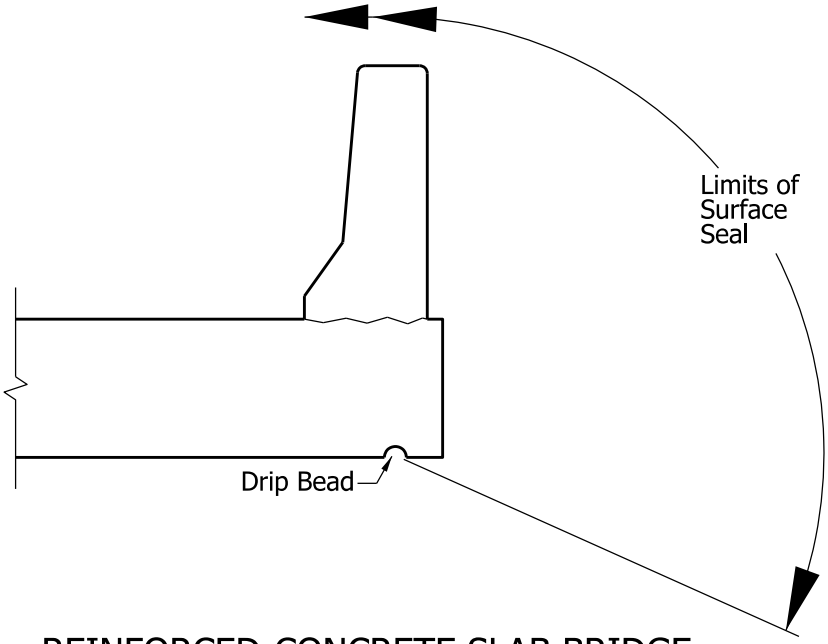

REINFORCED-CONCRETE SLAB BRIDGE

LIMITS OF SURFACE SEAL TO BE SHOWN ON PLANS

Figure 09-25A