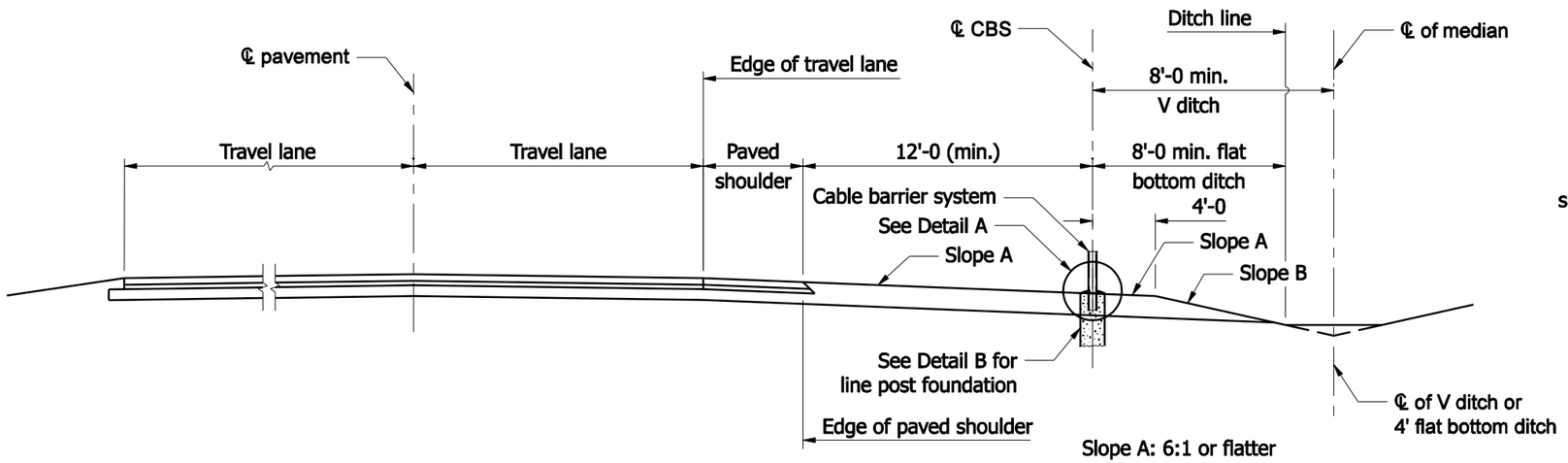

Slope A: 6:1 or flatter
Slope B: 6:1 or flatter desirable, 4:1 max.

ELEVATION

LOCATION OF CBS IN MEDIAN

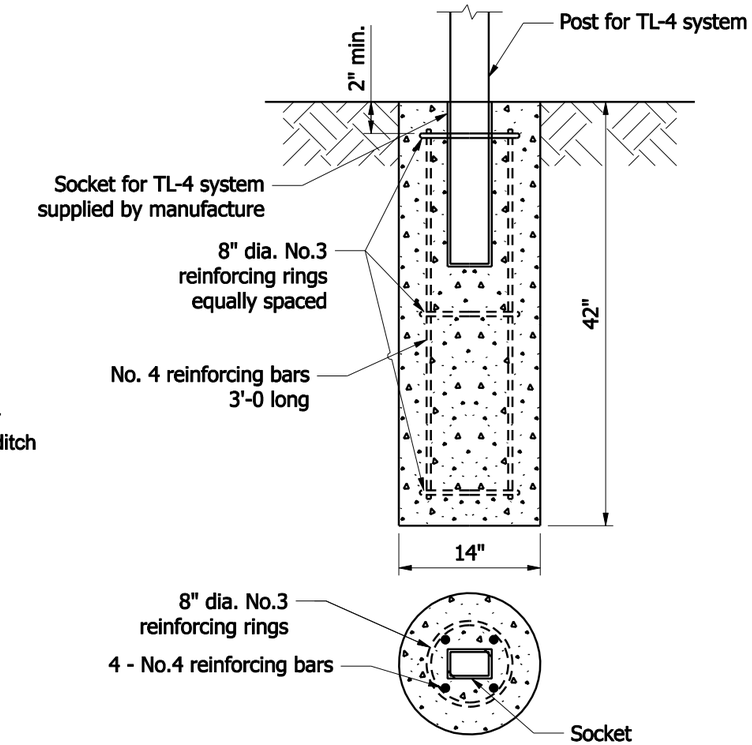

DETAIL B

MINIMUM SIZE AND MINIMUM REQUIRED REINFORCEMENT FOR LINE POST FOUNDATION FOR CBS TL-4 SYSTEM

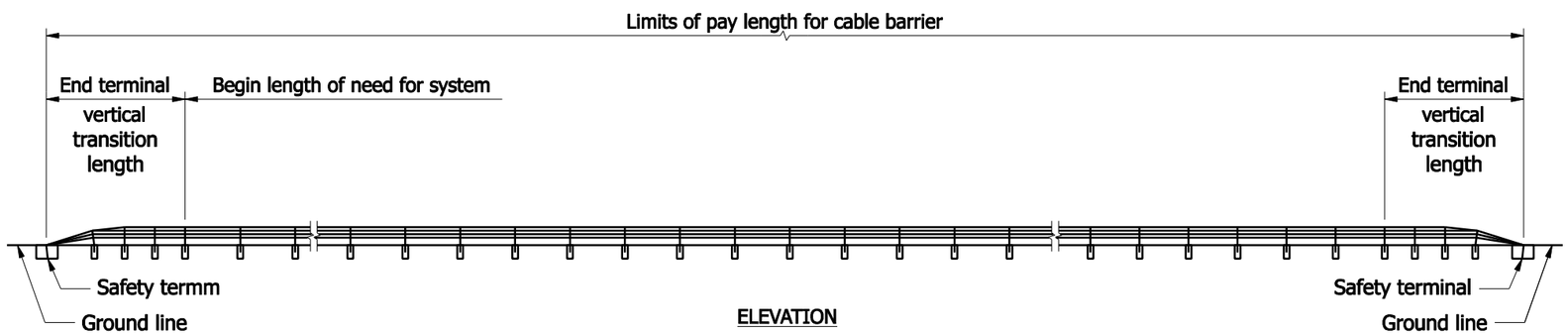

ELEVATION

TYPICAL CBS LAYOUT

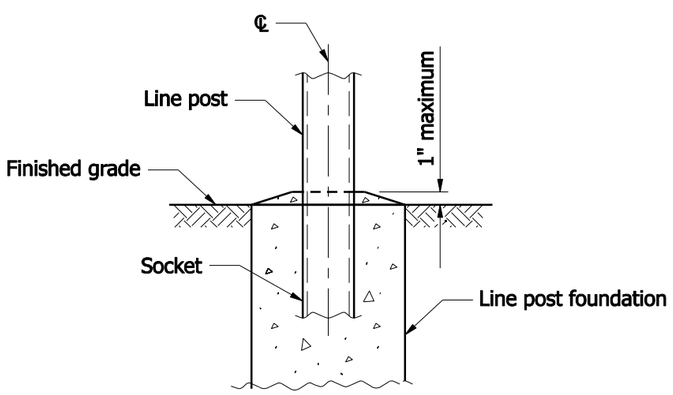

DETAIL A

NOTES:

1. CBS: Cable Barrier System.
2. Cable barrier placement detail shown on this drawing is applicable to median with a maximum paved shoulder width of 4 ft. and the following median widths:
   a. A minimum median width of 48 ft. for a V ditch
   b. A minimum median width of 52 ft. for a 4 ft. wide flat bottom ditch.
3. CBS horizontal alignment transitions shall be made on a 50:1 or flatter taper.

INDIANA DEPARTMENT OF TRANSPORTATION

LOCATION OF CBS IN MEDIAN

1-01-09

E 627-R-546d 1 of 6

NOTES:

1. CBS: Cable Barrier System.
2. For location of CBS, See Sheet 1 of 6.

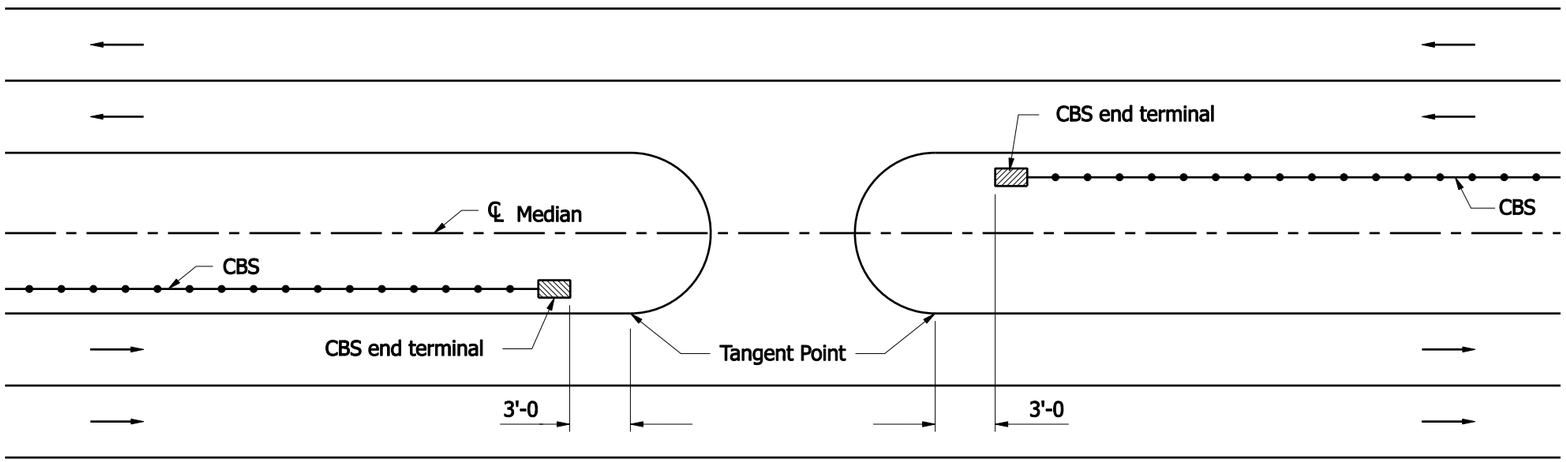

LOCATION OF CBS END TERMINAL AT MEDIAN CROSSOVER

INDIANA DEPARTMENT OF TRANSPORTATION

LOCATION OF CBS END TERMINAL
AT MEDIAN CROSSOVER

1-01-08

E 627-R-546d 2 of 6

NOTES:

1. CBS: Cable Barrier System.
2. For location of CBS, See Sheet 1 of 6.

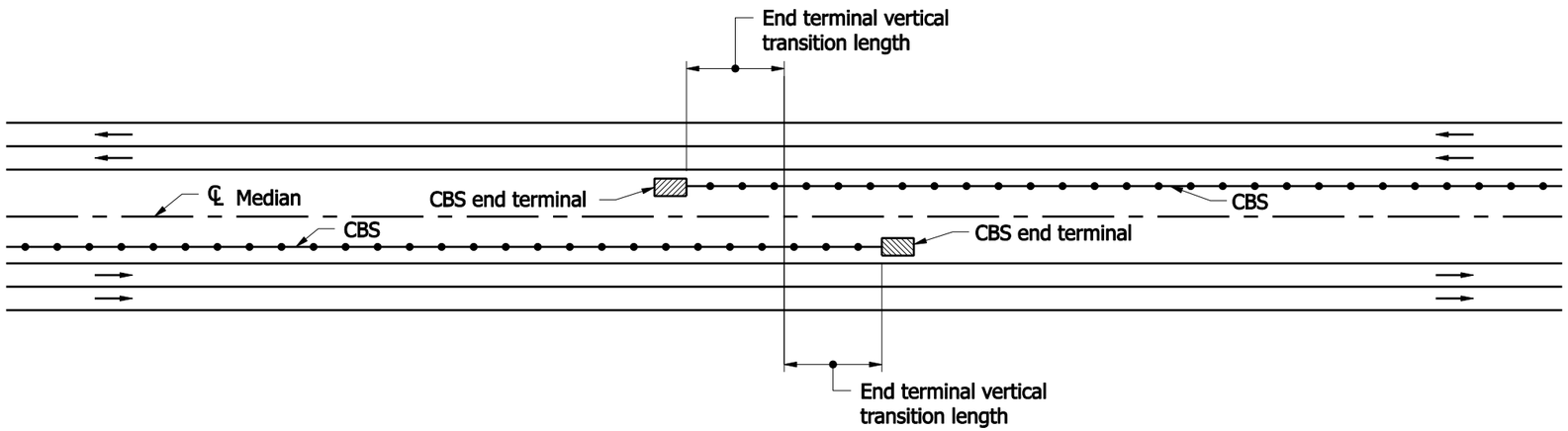

CHANGING LOCATION OF CBS TRAFFIC SIDE TO OPPOSITE SIDE OF MEDIAN (DESIRABLE)

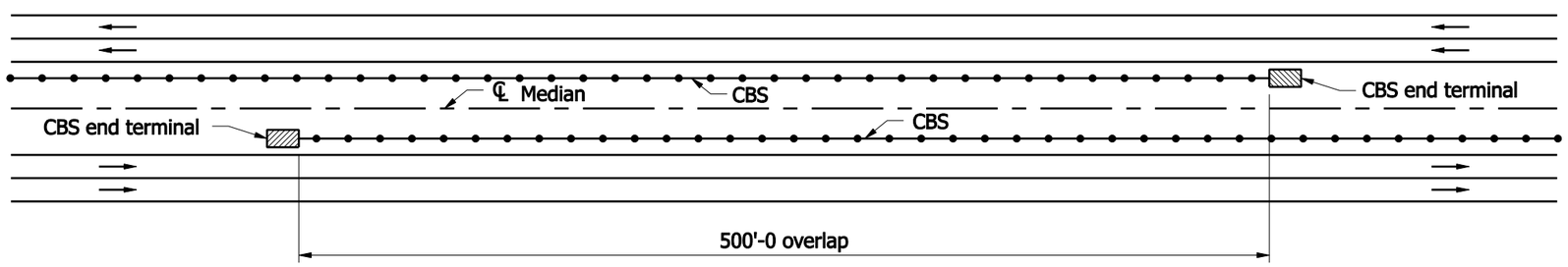

CHANGING LOCATION OF CBS TRAFFIC SIDE TO OPPOSITE SIDE OF MEDIAN (ALTERNATE)

INDIANA DEPARTMENT OF TRANSPORTATION

CHANGING LOCATION OF CBS TRAFFIC SIDE TO OPPOSITE SIDE OF MEDIAN

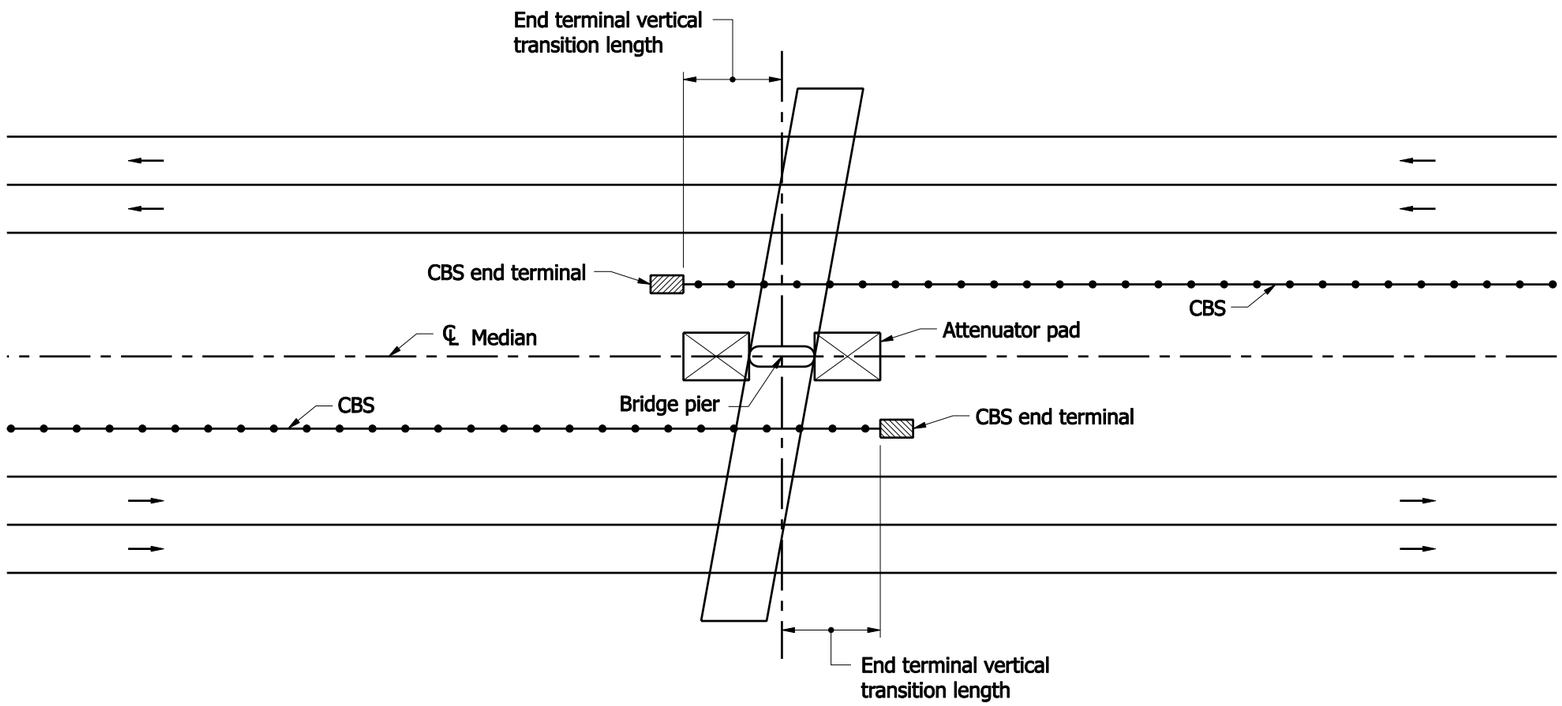

CBS AT MEDIAN BRIDGE PIER WITH ATTENUATOR

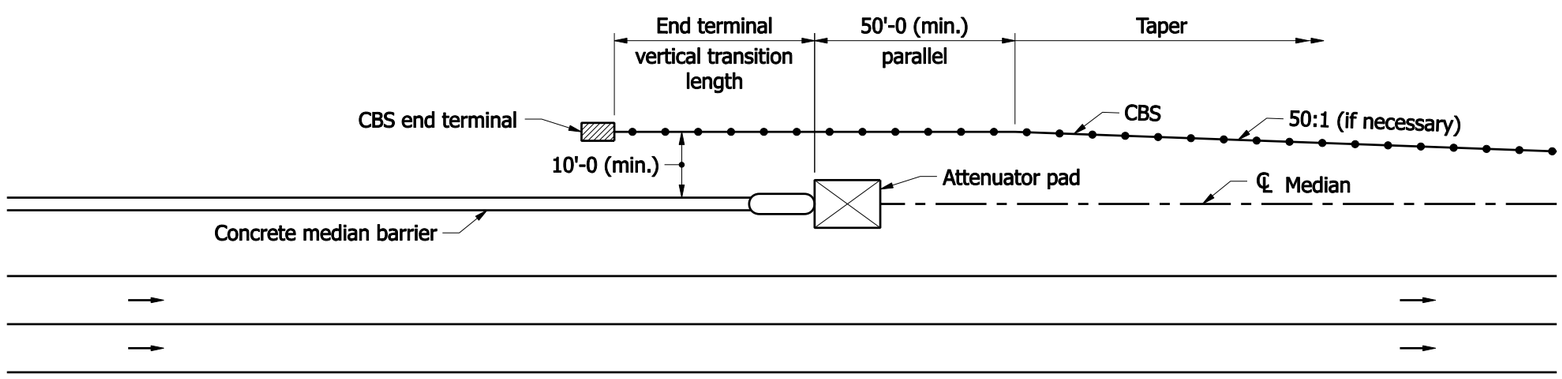

CBS AT CONCRETE MEDIAN BARRIER WITH ATTENUATOR

NOTES:

1. CBS: Cable Barrier System.
2. For location of CBS, See Sheet 1 of 6.

INDIANA DEPARTMENT OF TRANSPORTATION

CBS AT MEDIAN BRIDGE PIER

1-01-08

E 627-R-546d 4 of 6

NOTES:

1. CBS: Cable Barrier System.
2. For location of CBS, See Sheet 1 of 6.

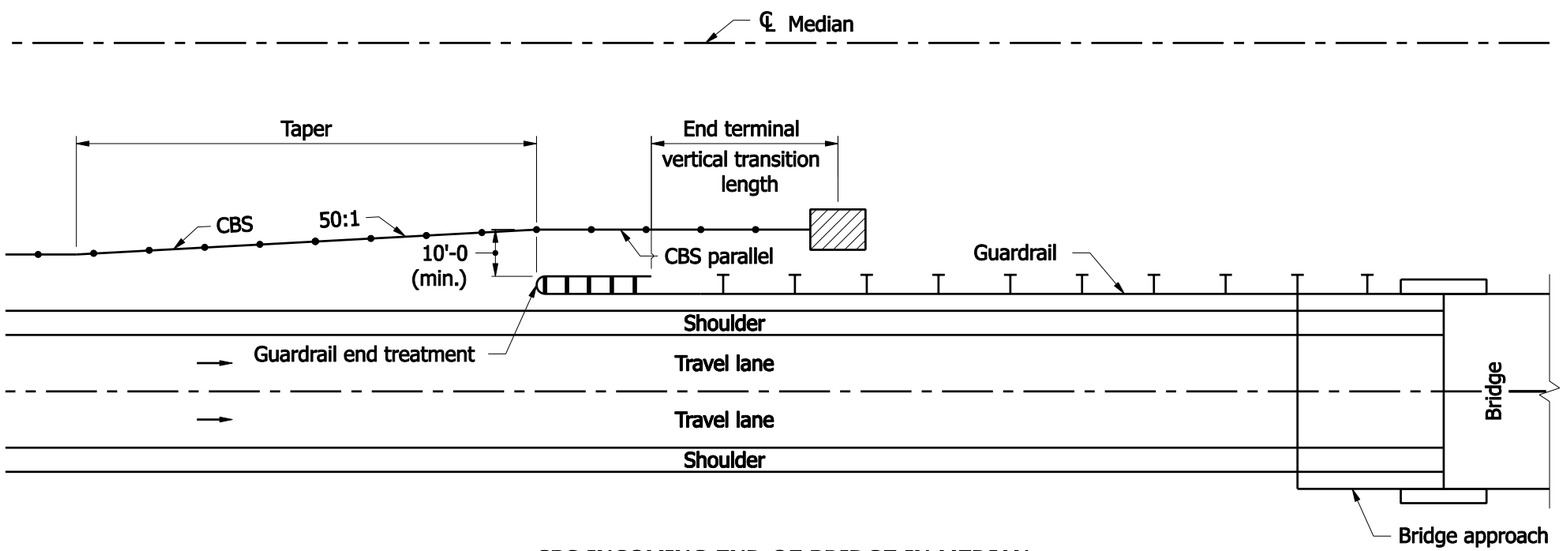

CBS INCOMING END OF BRIDGE IN MEDIAN

INDIANA DEPARTMENT OF TRANSPORTATION

CBS INCOMING END OF BRIDGE
IN MEDIAN

1-01-08

E 627-R-546d 5 of 6

NOTES:

1. CBS: Cable Barrier System.
2. For location of CBS, See Sheet 1 of 6.

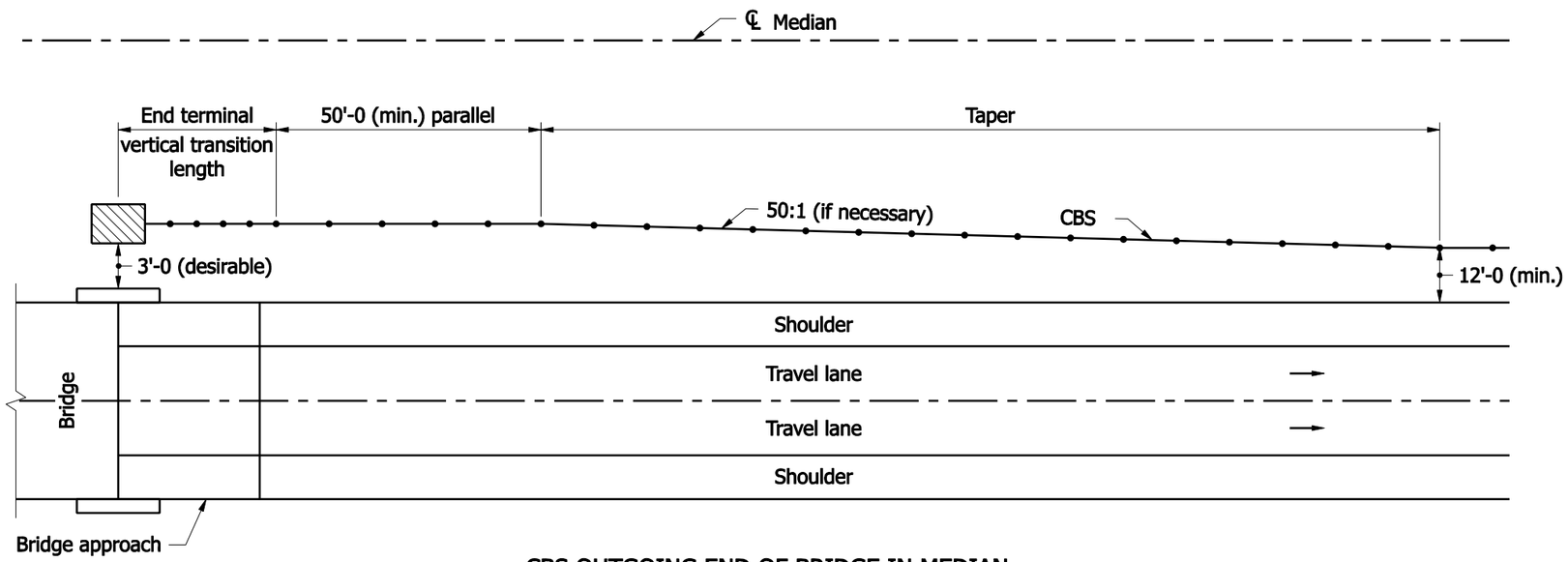

CBS OUTGOING END OF BRIDGE IN MEDIAN

INDIANA DEPARTMENT OF TRANSPORTATION

CBS OUTGOING END OF BRIDGE IN MEDIAN

1-01-08

E 627-R-546d 6 of 6