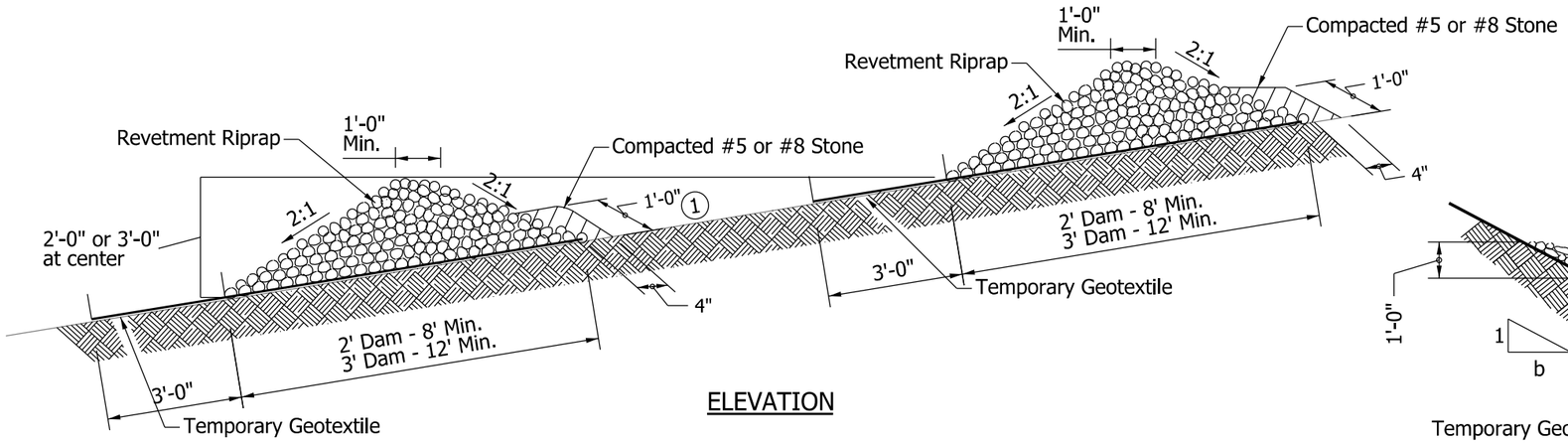

ELEVATION

NOTES:

① Riprap ditch check dams shall be spaced such that the top of the downstream check dam is at the same elevation as the toe of the adjacent upstream check dam.

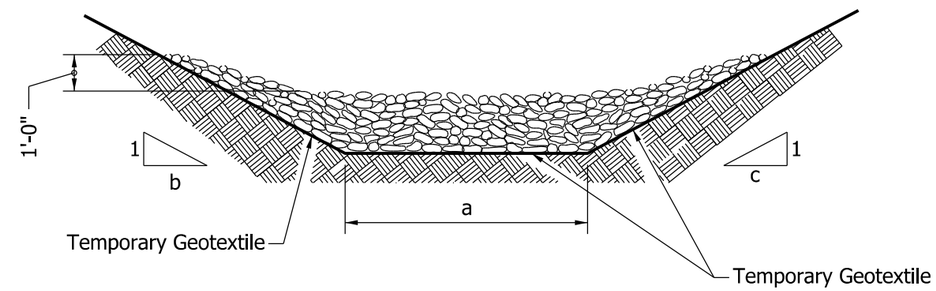

SECTION A-A

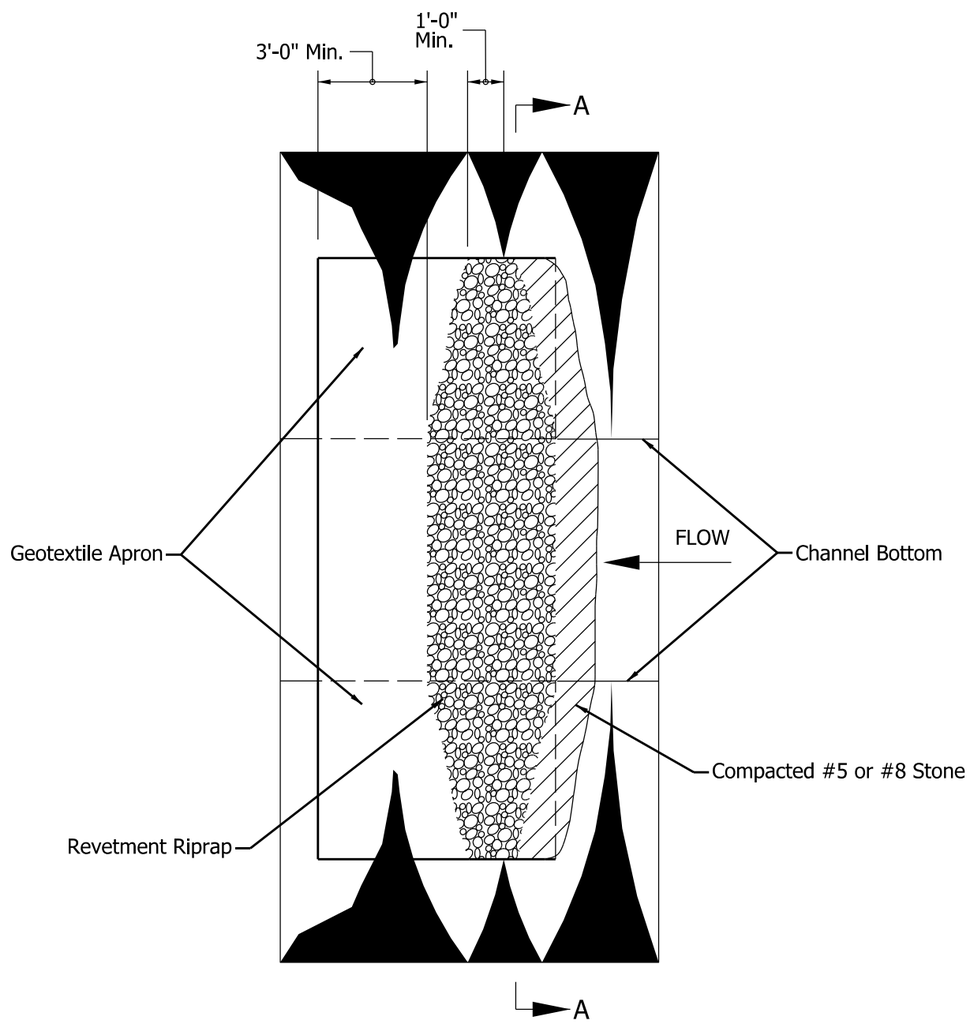

PLAN

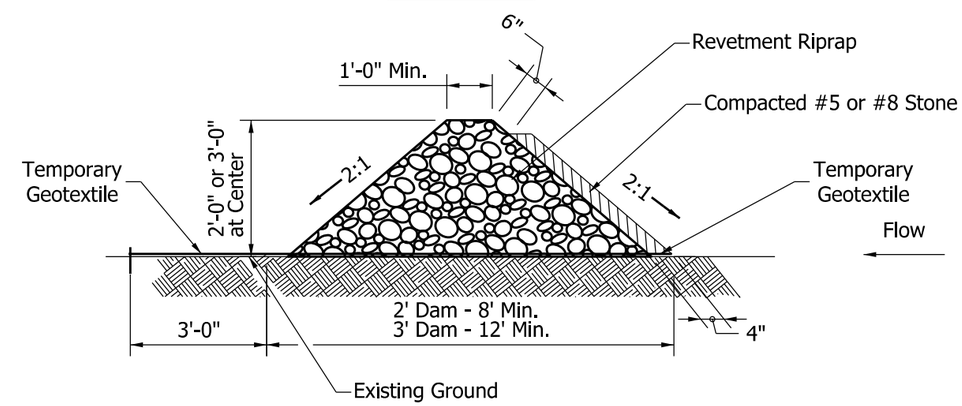

CHECK DAM MODIFIED

INDIANA DEPARTMENT OF TRANSPORTATION

TEMPORARY CHECK DAM
REVETMENT RIPRAP

SEPTEMBER 2012

STANDARD DRAWING NO. E 205-TECD-01

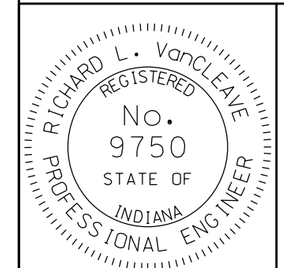

/s/ Richard L. VanCleave 09/04/12
SUPERVISOR, ROADWAY STANDARDS DATE

/s/ Mark A. Miller 09/04/12
CHIEF ENGINEER DATE

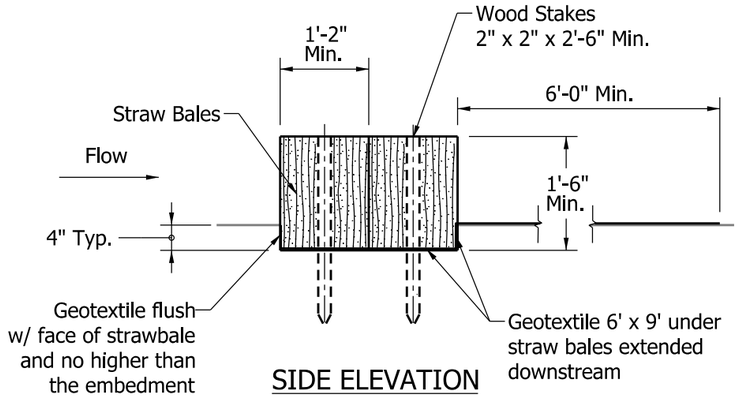

SIDE ELEVATION
STRAW BALE INSTALLATION

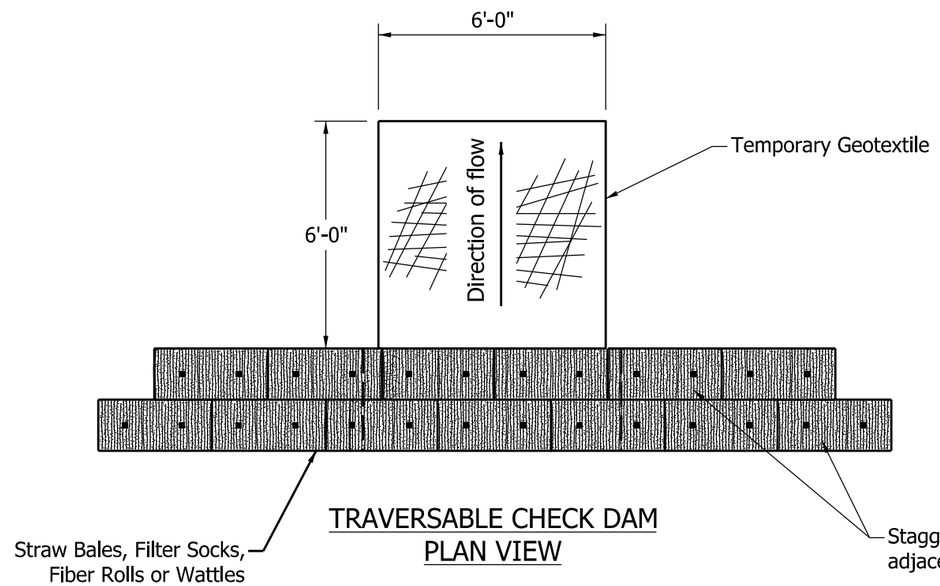

TRAVERSABLE CHECK DAM
PLAN VIEW

NOTES:

1. Ditch check dams shall be spaced such that the top of the downstream check dam is at the same elevation as the toe of the adjacent upstream check dam.

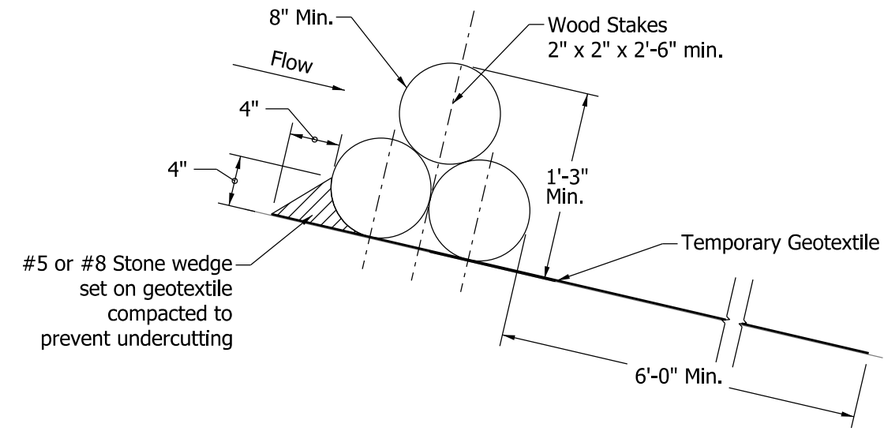

SIDE ELEVATION
ROLLED EROSION CONTROL PRODUCT OPTION

Stacking Method:
Filter Socks, Fiber Rolls or Wattle Installation

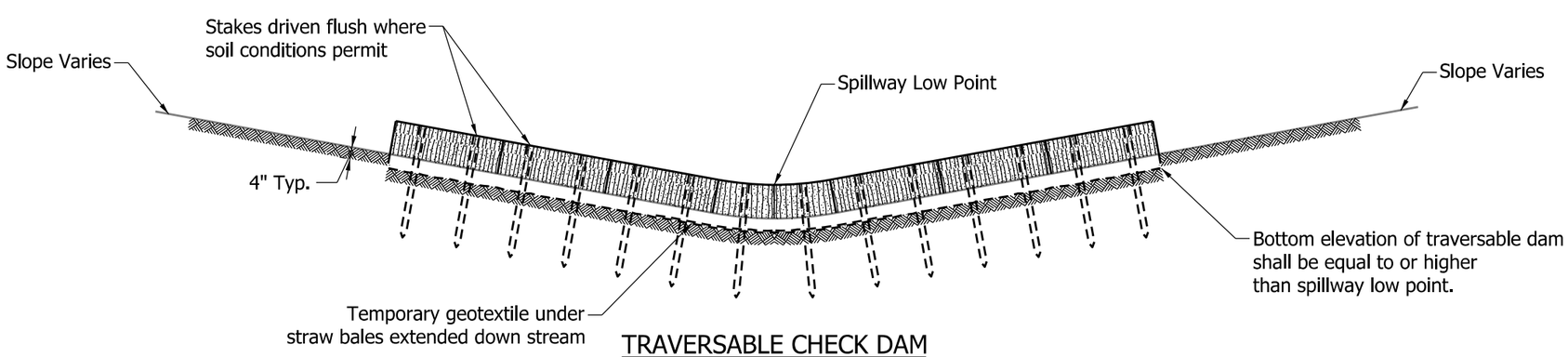

TRAVERSABLE CHECK DAM
FRONT ELEVATION

INDIANA DEPARTMENT OF TRANSPORTATION

TEMPORARY CHECK DAM, TRAVERSABLE
FOR CLEAR ZONE

SEPTEMBER 2012

STANDARD DRAWING NO. E-205-TECD-02

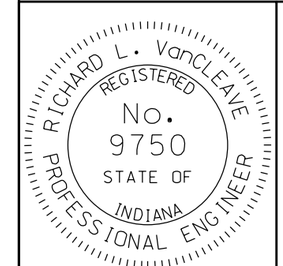

/s/ Richard L. VanCleave 09/04/12
SUPERVISOR, ROADWAY STANDARDS DATE

/s/ Mark A. Miller 09/04/12
CHIEF ENGINEER DATE

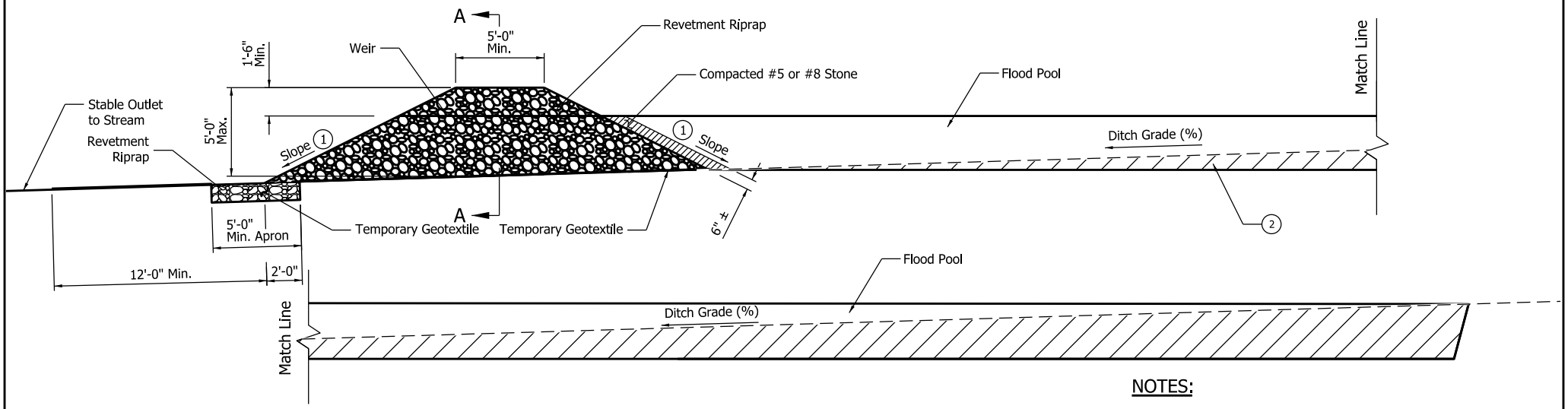

ELEVATION VIEW

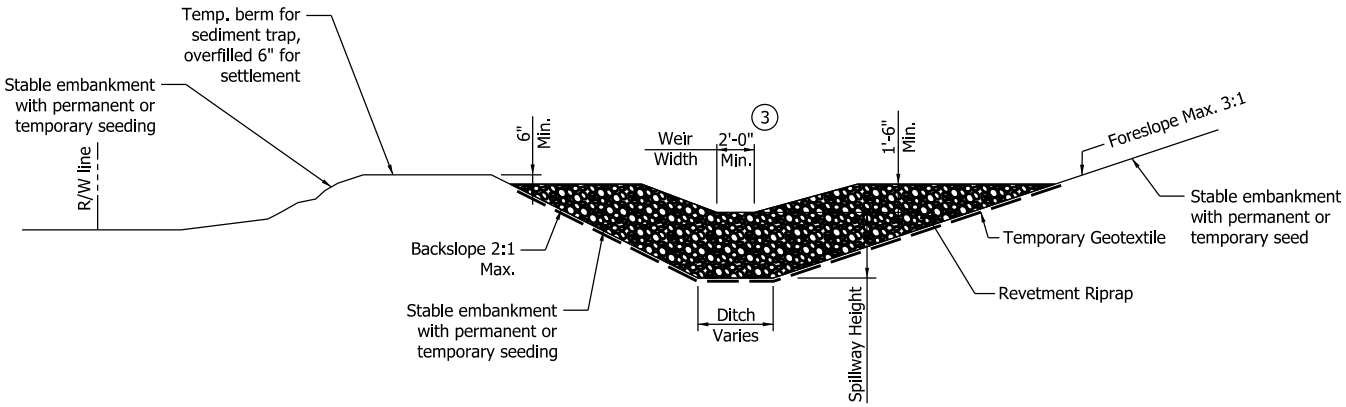

SECTION A-A

NOTES:

1. Slope should be 3:1 maximum on the near side with respect to the direction of traffic while the far side slope may be 2:1 maximum.
2. This area may be excavated below planed ditch grade to achieve sediment trap capacity. It shall not be excavated to below the bottom elevation of sediment trap riprap. However, over-excavation does not count toward trap capacity of 2-year 24-hour storm event.
3. Weir width equals ditch bottom width, min. 2ft.

INDIANA DEPARTMENT OF TRANSPORTATION

TEMPORARY SEDIMENT TRAP

SEPTEMBER 2012

STANDARD DRAWING NO. E 205-TECD-03

RICHARD L. VanCLEAVE REGISTERED No. 9750 STATE OF INDIANA PROFESSIONAL ENGINEER

DETAILS PLACED IN THIS FORMAT	09/16/16
/s/ Richard L. Van Cleave	09/04/12
DESIGN STANDARDS ENGINEER	DATE
/s/ Mark A. Miller	09/04/12
CHIEF ENGINEER	DATE